US 20070031153A1

(19) United States

(12) Patent Application Publication

(10) Pub. No.: US 2007/0031153 A1

(43) Pub. Date: Feb. 8, 2007

Aronson et al.

(54) TRANSCEIVER MODULE AND INTEGRATED CIRCUIT WITH DUAL EYE OPENERS

(75) Inventors: **Lewis B. Aronson**, Los Altos, CA (US); **Rudy Hofmeister**, Sunnyvale, CA (US); **Christopher Madden**, Los Altos, CA (US); **Mark Farley**, Napa, CA (US); **Dan Case**, Gilroy, CA (US); **Tom Lenosky**, Mountain View, CA (US)

Correspondence Address:
WORKMAN NYDEGGER
(F/K/A WORKMAN NYDEGGER & SEELEY)
60 EAST SOUTH TEMPLE
1000 EAGLE GATE TOWER
SALT LAKE CITY, UT 84111 (US)

(73) Assignee: **Finisar Corporation**

(21) Appl. No.: **10/420,027**

(22) Filed: **Apr. 17, 2003**

Related U.S. Application Data

(60) Provisional application No. 60/410,509, filed on Sep. 13, 2002. Provisional application No. 60/391,877, filed on Jun. 25, 2002.

Publication Classification

(51) **Int. Cl.**
H04B 10/00 (2006.01)

(52) **U.S. Cl.** **398/138**

(57) **ABSTRACT**

A transceiver module having integrated eye diagram opening functionality for reducing jitter is described. The transceiver module may include a transmitter eye opener and a receiver eye opener integrated in a single circuit. The transceiver module may also include serial control and various other integrated components. Other functionalities that may be integrated on the transceiver module include loopback modes, bypass features, bit error rate testing, and power down modes.

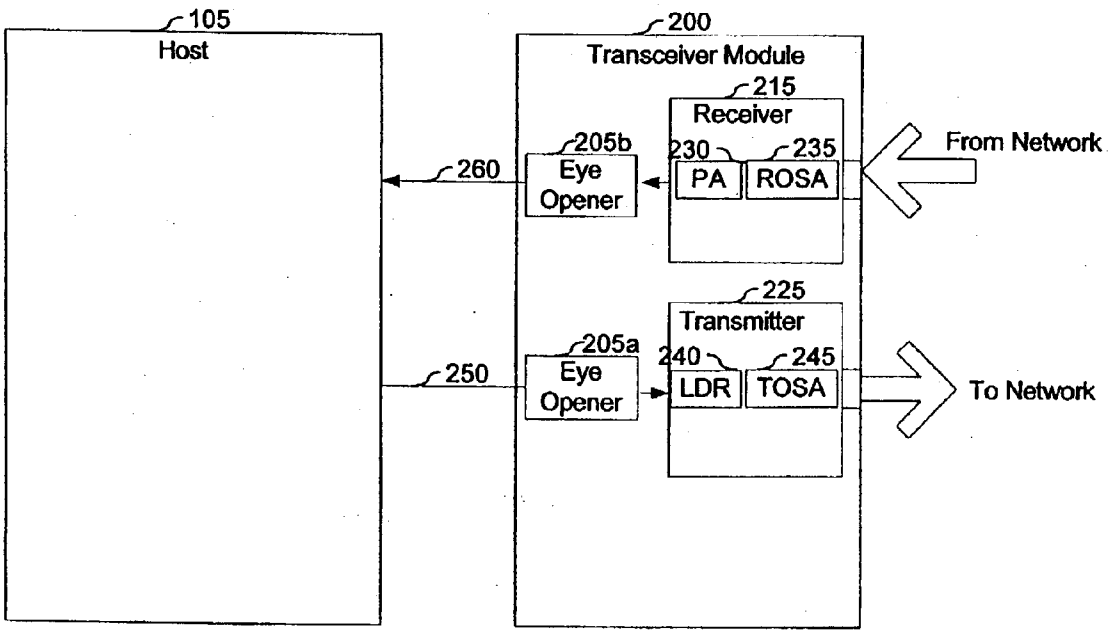

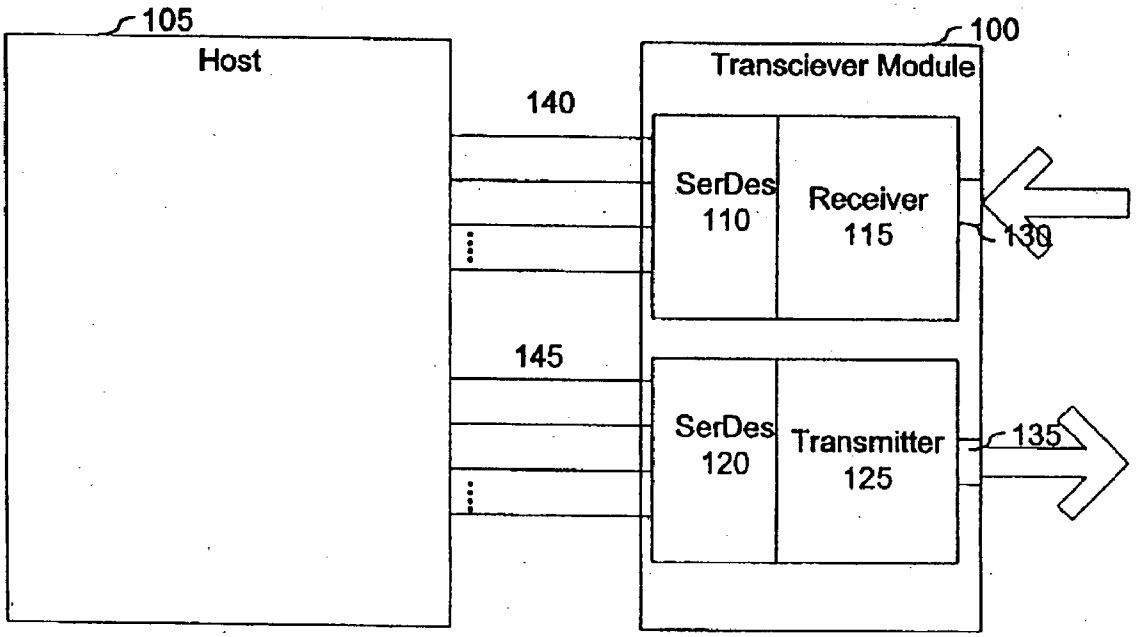

Fig. 1 (Prior Art)

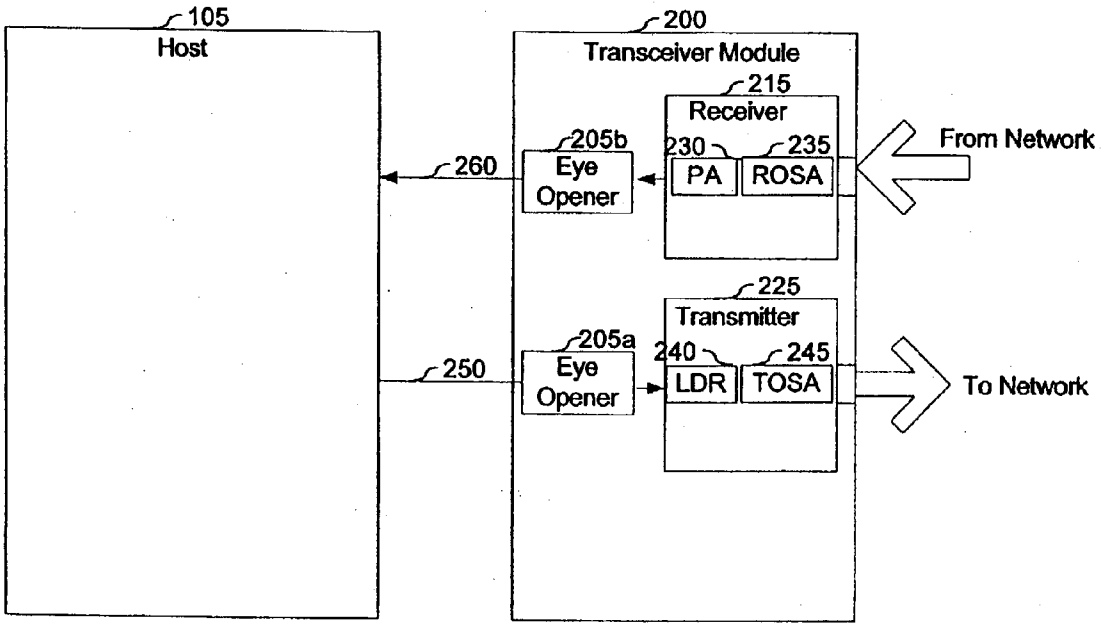
105
Host
200
Transceiver Module
215
Receiver
205b
Eye
Opener
230
PA
235
ROSA
From Network
260
225
Transmitter
205a
Eye
Opener
240
LDR
245
TOSA
250
To Network

Fig. 2

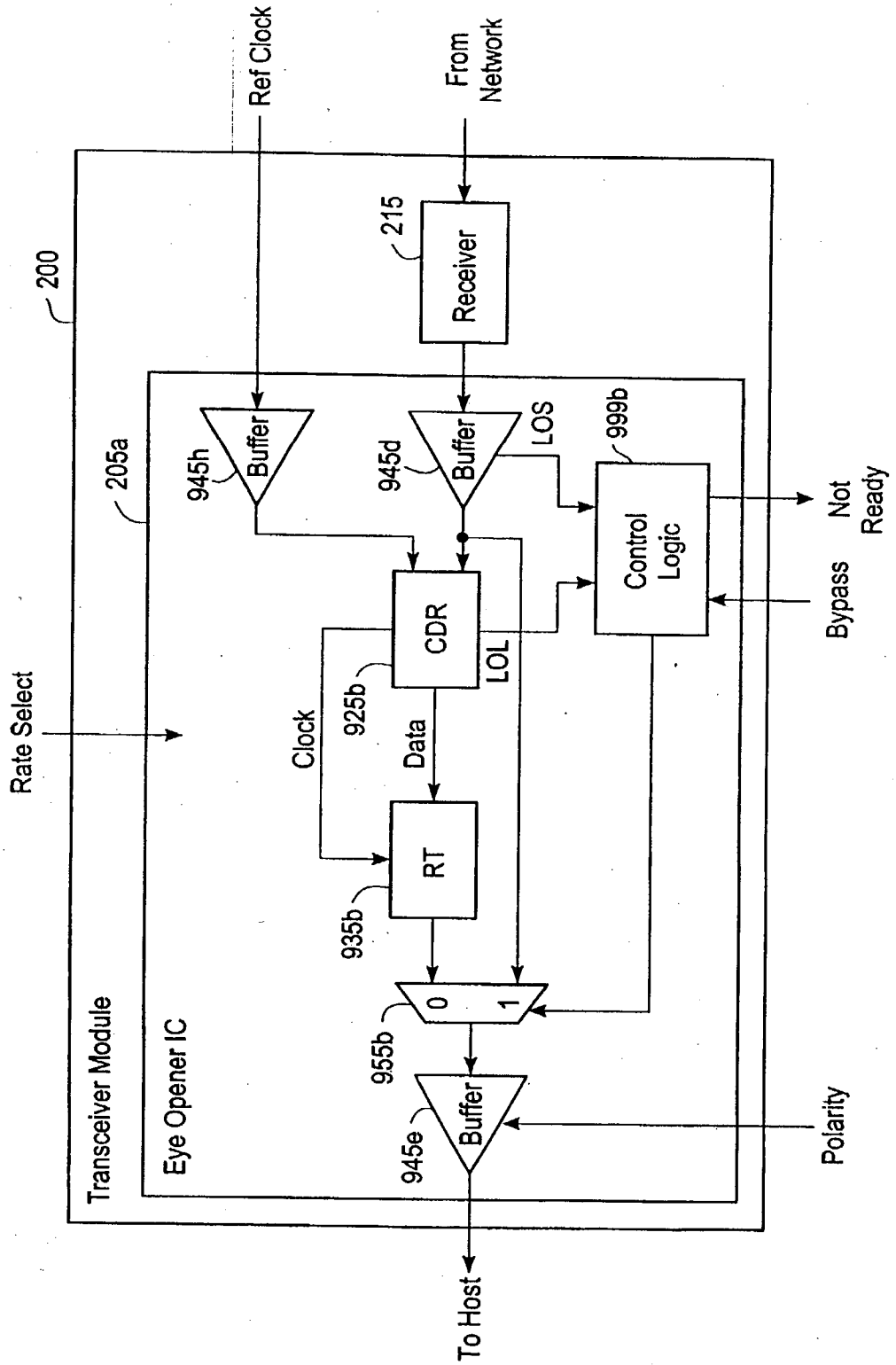
Ref Clock
From Network
200
215
Receiver
205a
945h
Buffer
945d
Buffer
LOS
999b
Control Logic
Not Ready
Bypass
CDR
LOL
925b
Clock
Data
Rate Select
RT
935b
0
1
955b
945e
Buffer
Polarity
Transceiver Module
Eye Opener IC
To Host

Fig. 3

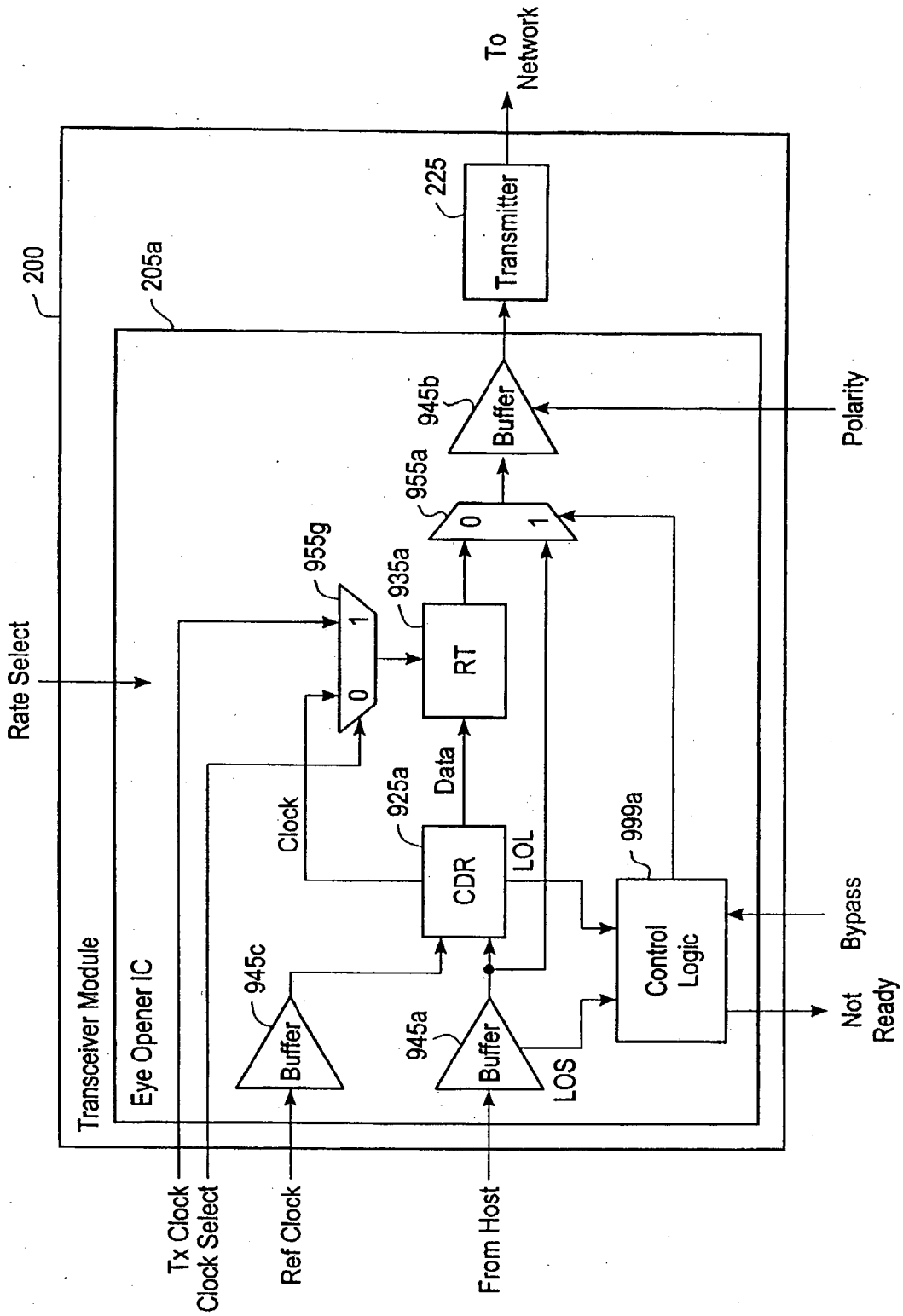
200
205a
Transceiver Module
Eye Opener IC
Rate Select
Tx Clock
Clock Select
Ref Clock
From Host
945c
Buffer
945a
Buffer
LOS
955g
0
1
Clock
925a
CDR
Data
LOL
935a
RT
955a
0
1
945b
Buffer
225
Transmitter
To Network
Polarity
999a
Control Logic
Bypass
Not Ready

Fig. 4

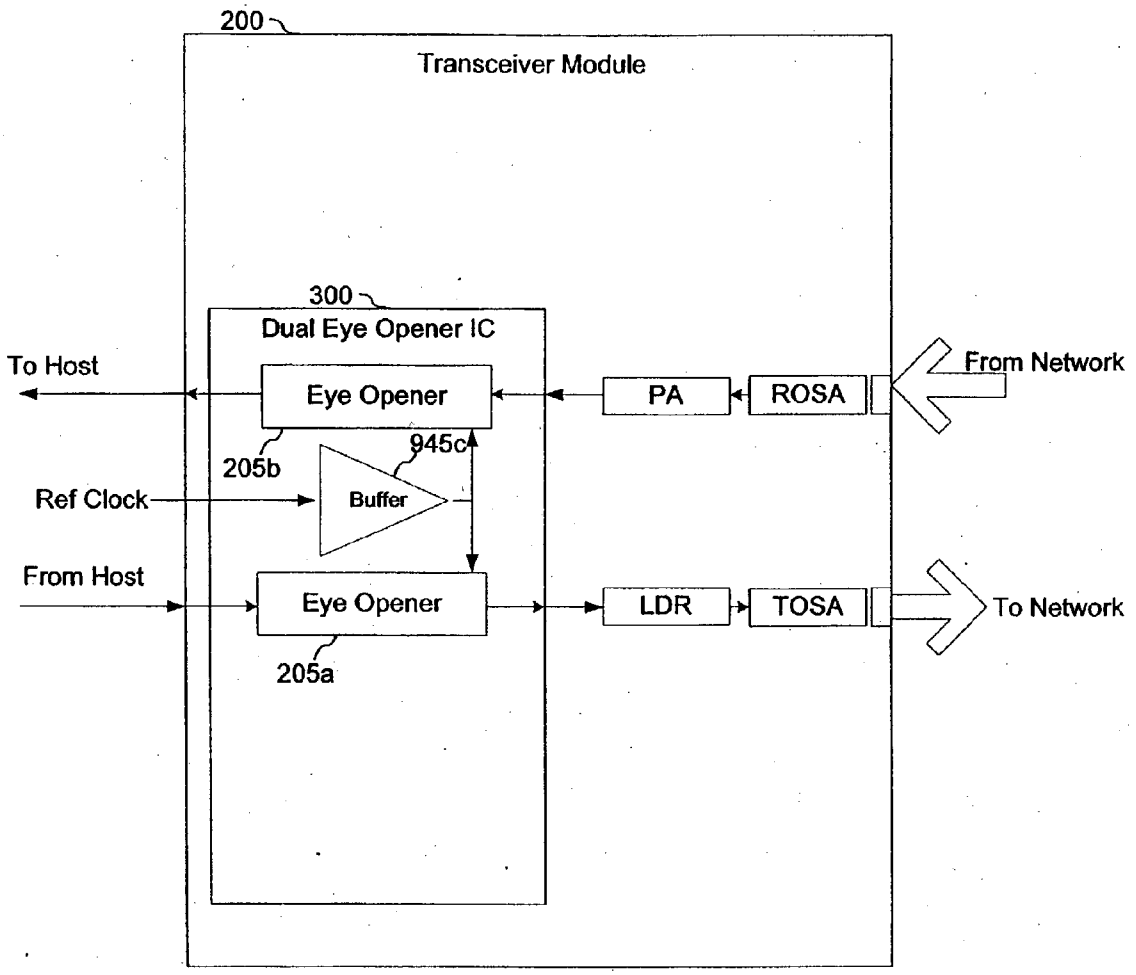
200
Transceiver Module
300
Dual Eye Opener IC
To Host
Eye Opener
PA
ROSA
From Network
205b
945c
Ref Clock
Buffer
From Host
Eye Opener
LDR
TOSA
To Network
205a

Fig. 5

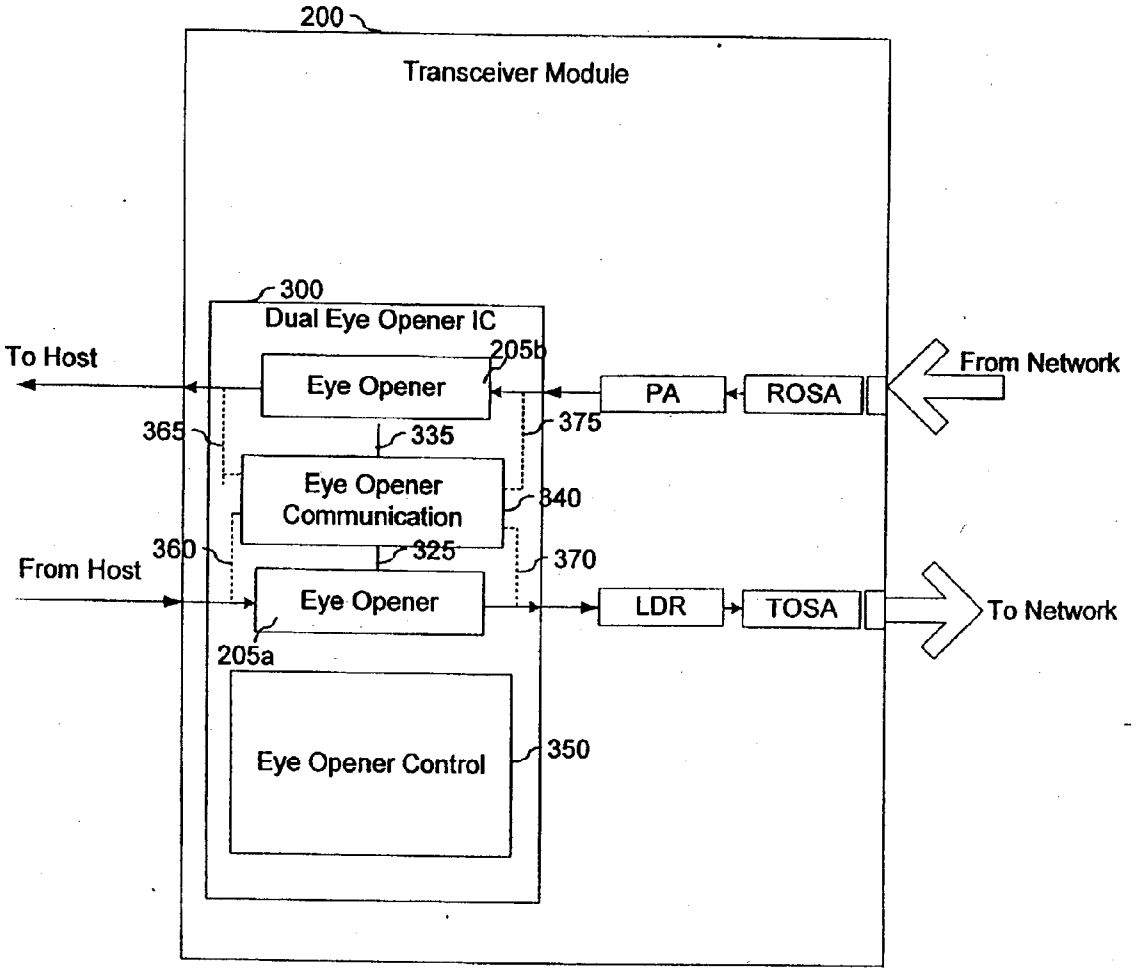
200
Transceiver Module
300
Dual Eye Opener IC
To Host
Eye Opener
205b
PA
ROSA
From Network
365
335
375
Eye Opener
Communication
340
360
325
370
From Host
Eye Opener
LDR
TOSA
To Network
205a
Eye Opener Control
350

Fig. 6

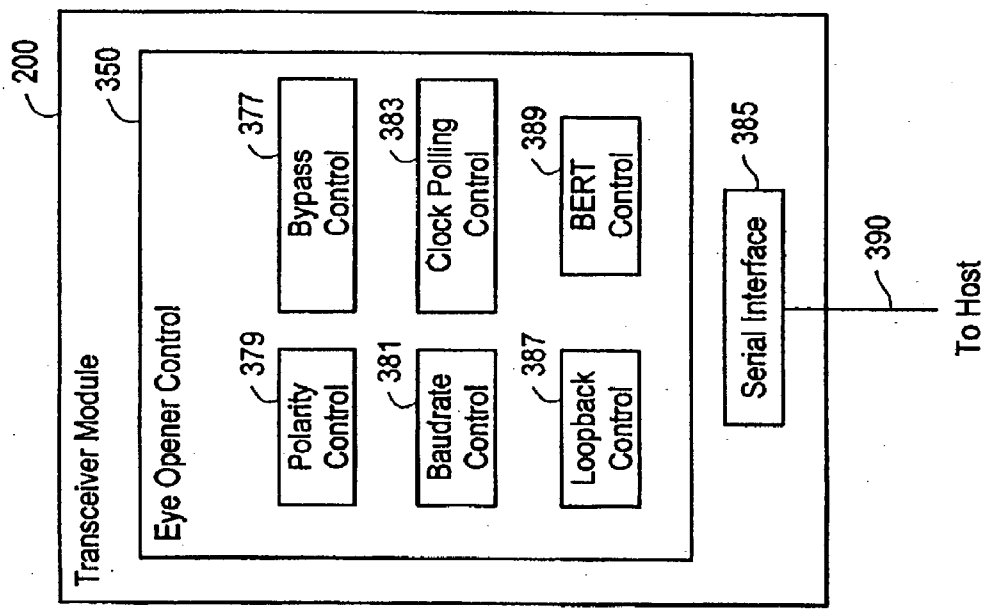
200
Transceiver Module
350
Eye Opener Control
379
Polarity Control
377
Bypass Control
381
Baudrate Control
383
Clock Polling Control
387
Loopback Control
389
BERT Control
385
Serial Interface
390
To Host

Fig. 7

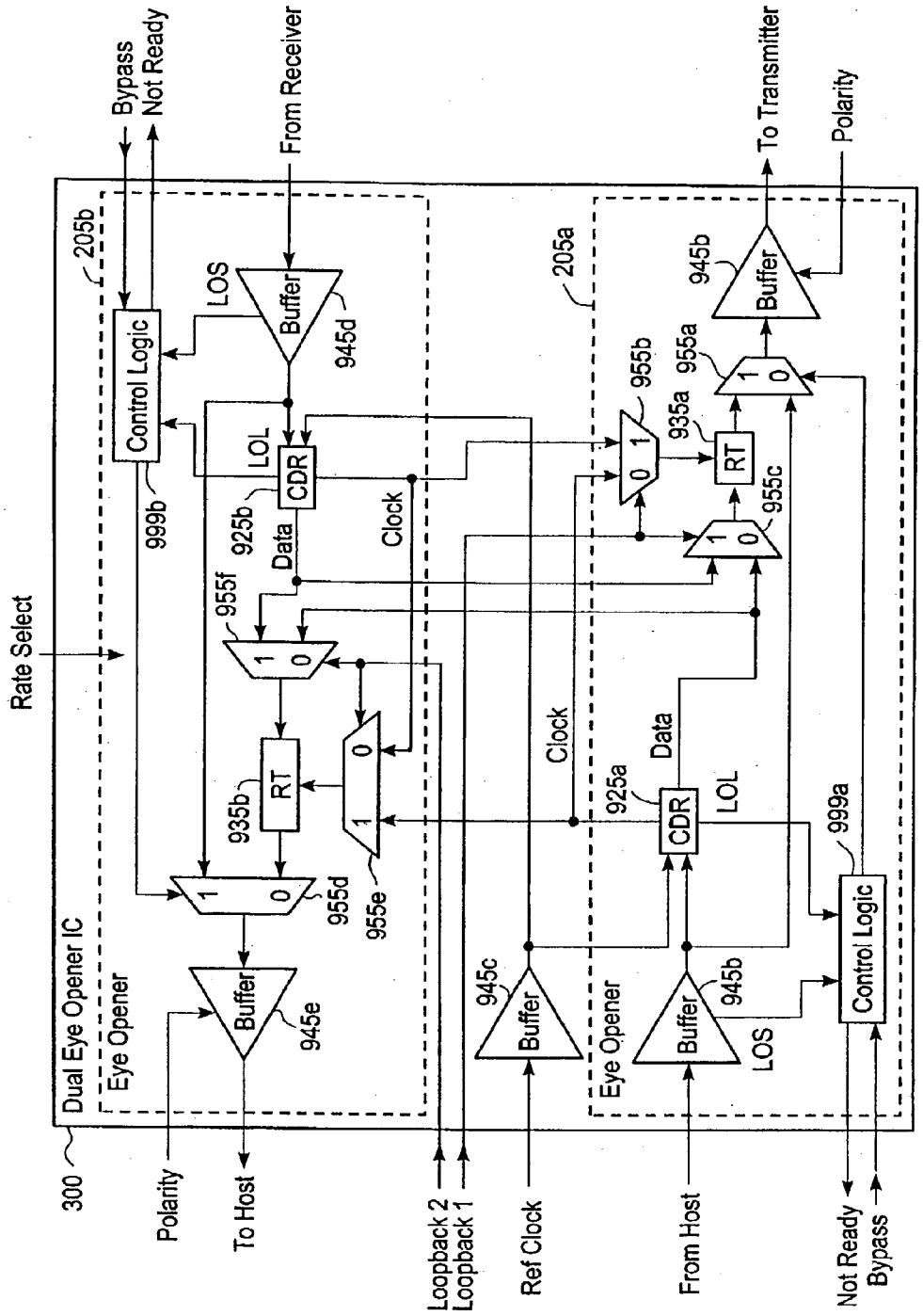
Bypass
Not Ready
From Receiver
To Transmitter
Polarity
205b
205a
Control Logic
LOS
Buffer
945d
945b
955b
955a
935a
RT
955c
LOL
CDR
925b
Data
Clock
999b
955f
Rate Select
935b
955d
955e
925a
999a
Dual Eye Opener IC
Eye Opener
945e
945c
300
Polarity
To Host
Loopback 2
Loopback 1
Ref Clock
From Host
Not Ready
Bypass

Fig. 8

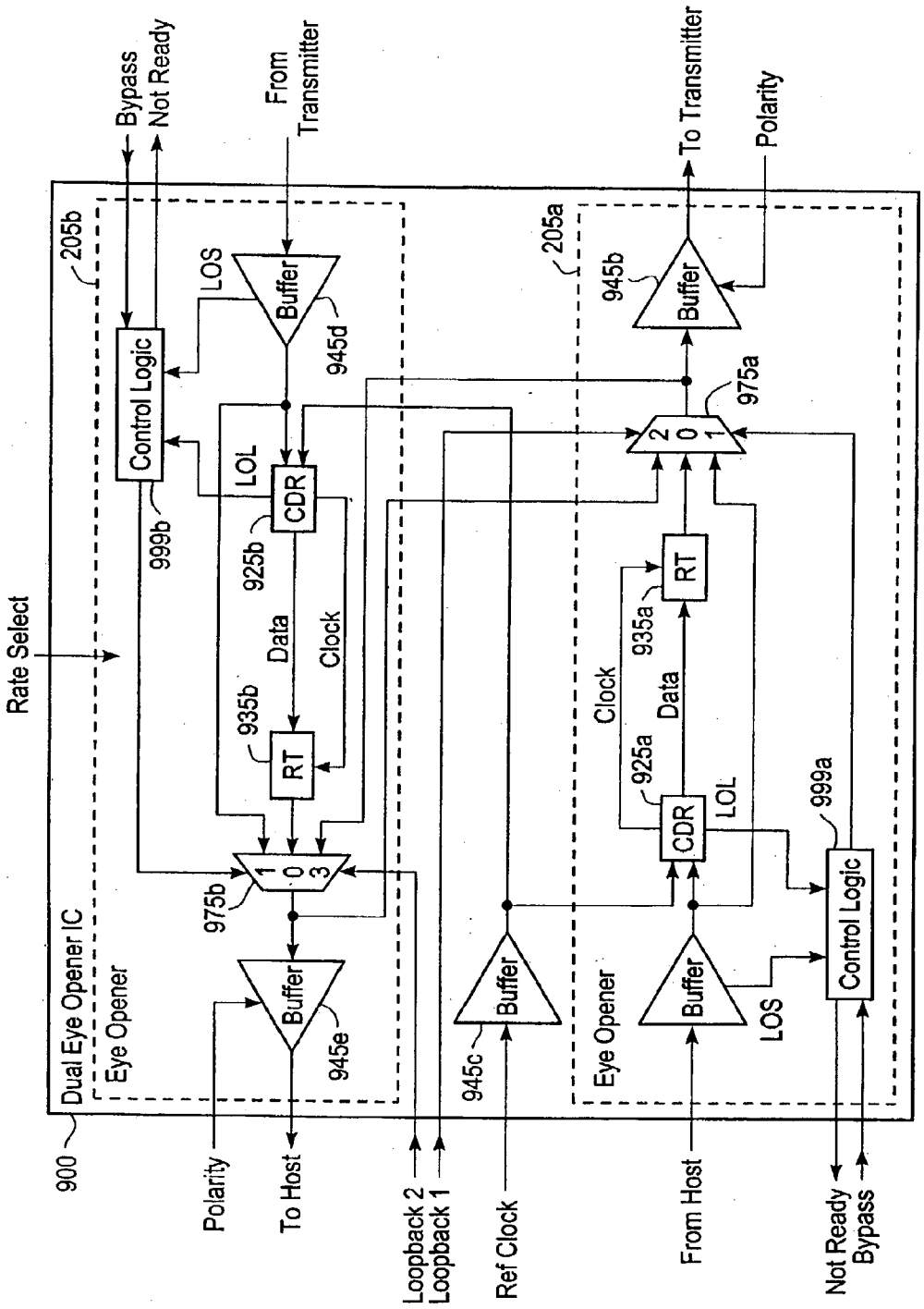
Bypass
Not Ready
From Transmitter
To Transmitter
Polarity
205b
205a
LOS
Buffer
945d
945b
Control Logic
999b
975a
LOL
CDR
925b
Data
Clock
935b
RT
935a
925a
975b
999a
Rate Select
Dual Eye Opener IC
Eye Opener
945e
945c
900
To Host
Loopback 2
Loopback 1
Ref Clock
From Host
Not Ready
Bypass

Fig. 9

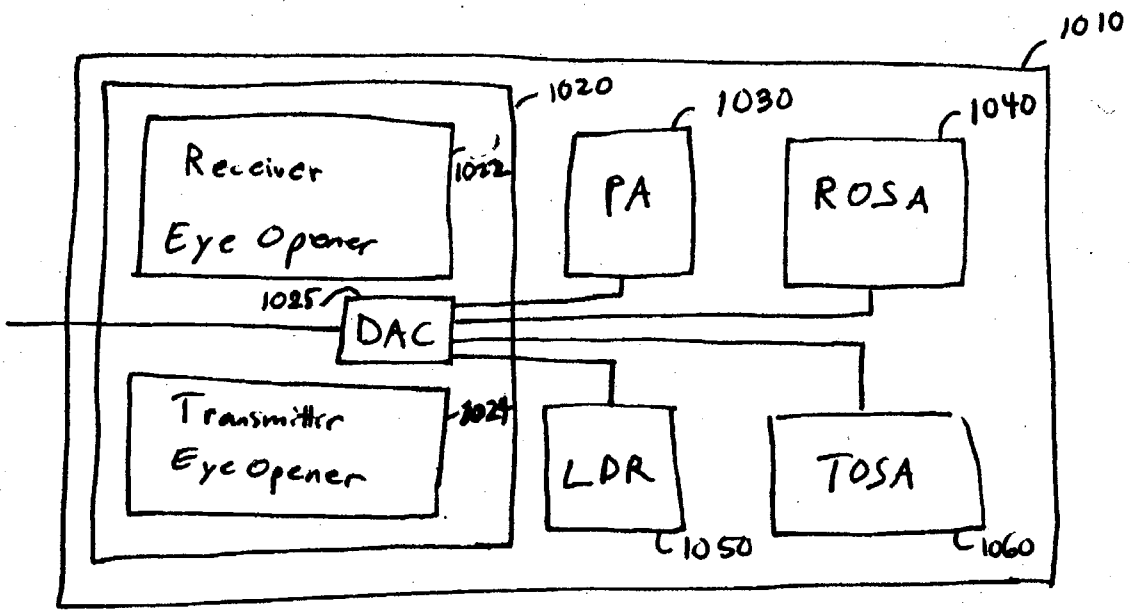
1010
1020
1030
1040
Receiver
Eye Opener
1022
PA
ROSA
1025
DAC
Transmitter
Eye Opener
1024
LDR
TOSA
1050
1060

Fig. 10

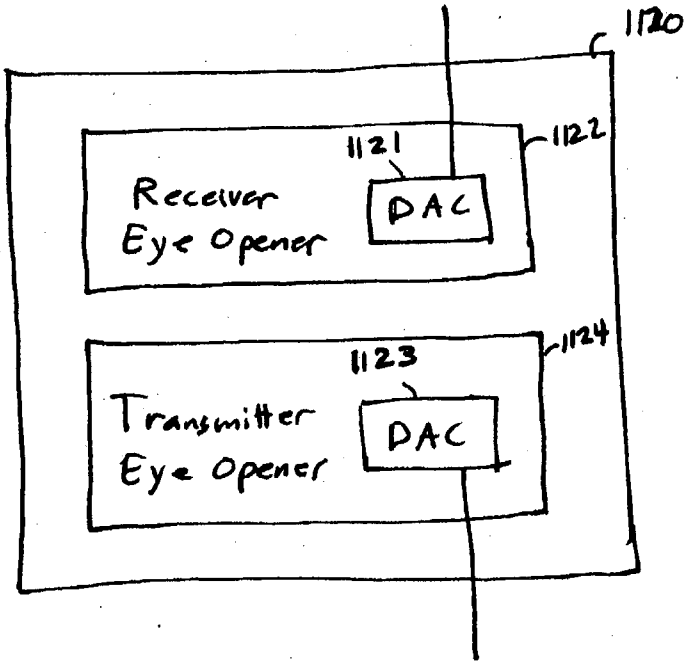
1120
1121
1122
Receiver
Eye Opener
DAC
1123
1124
Transmitter
Eye Opener
DAC

Fig. 11

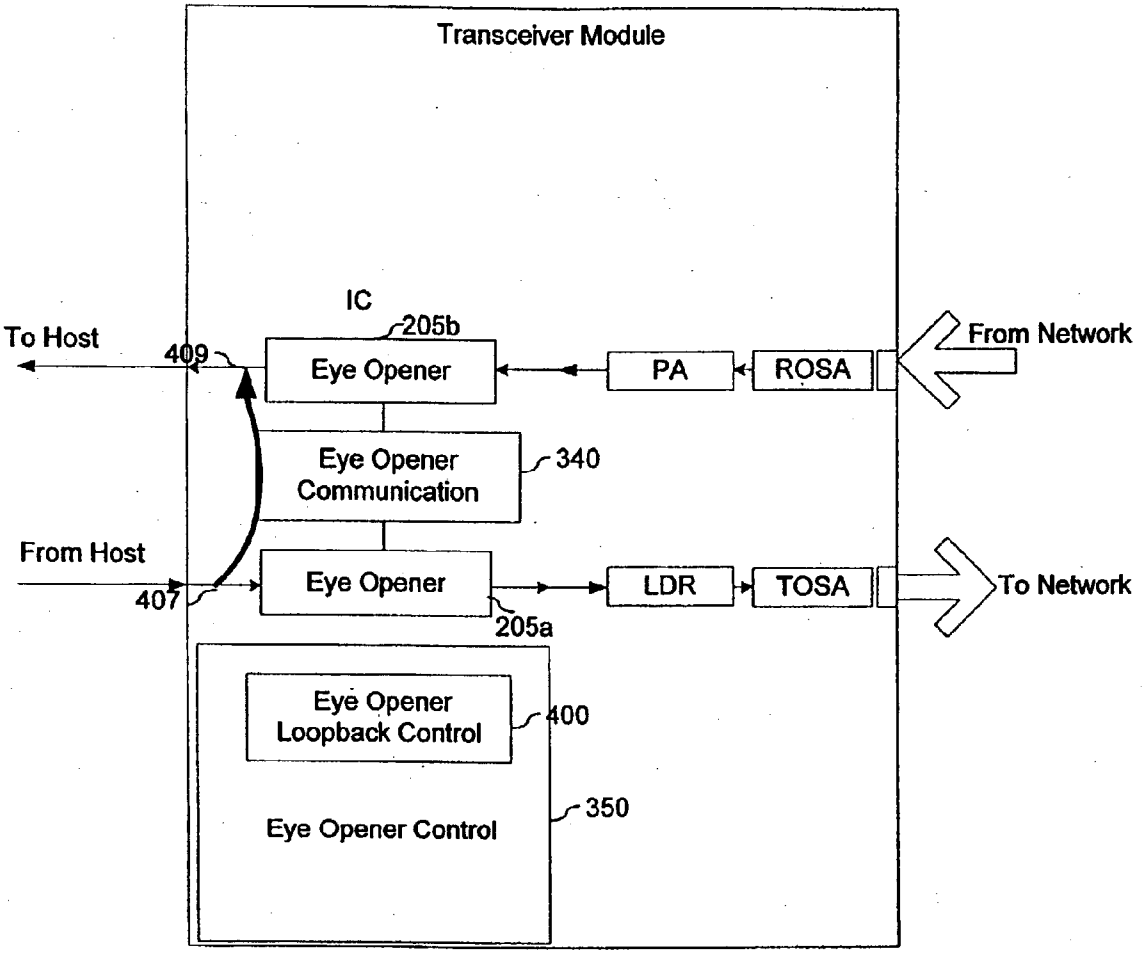
Transceiver Module
IC
205b
To Host
409
Eye Opener
PA
ROSA
From Network
Eye Opener
Communication
340
From Host
407
Eye Opener
LDR
TOSA
To Network
205a
Eye Opener
Loopback Control
400
350
Eye Opener Control

Fig. 12A

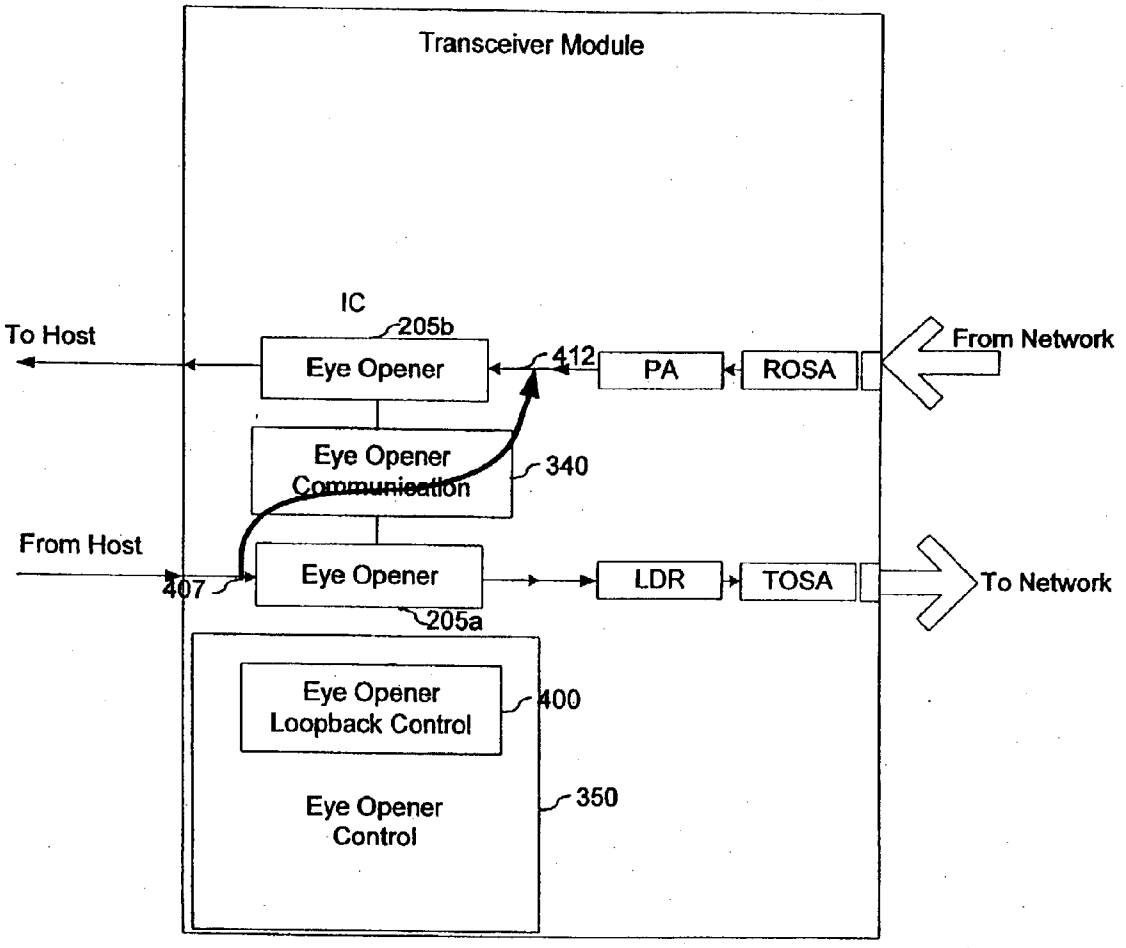
Transceiver Module
IC
205b
To Host
Eye Opener
412
PA
ROSA
From Network
Eye Opener
Communication
340
From Host
407
Eye Opener
LDR
TOSA
To Network
205a
Eye Opener
Loopback Control
400
Eye Opener
Control
350

Fig. 12B

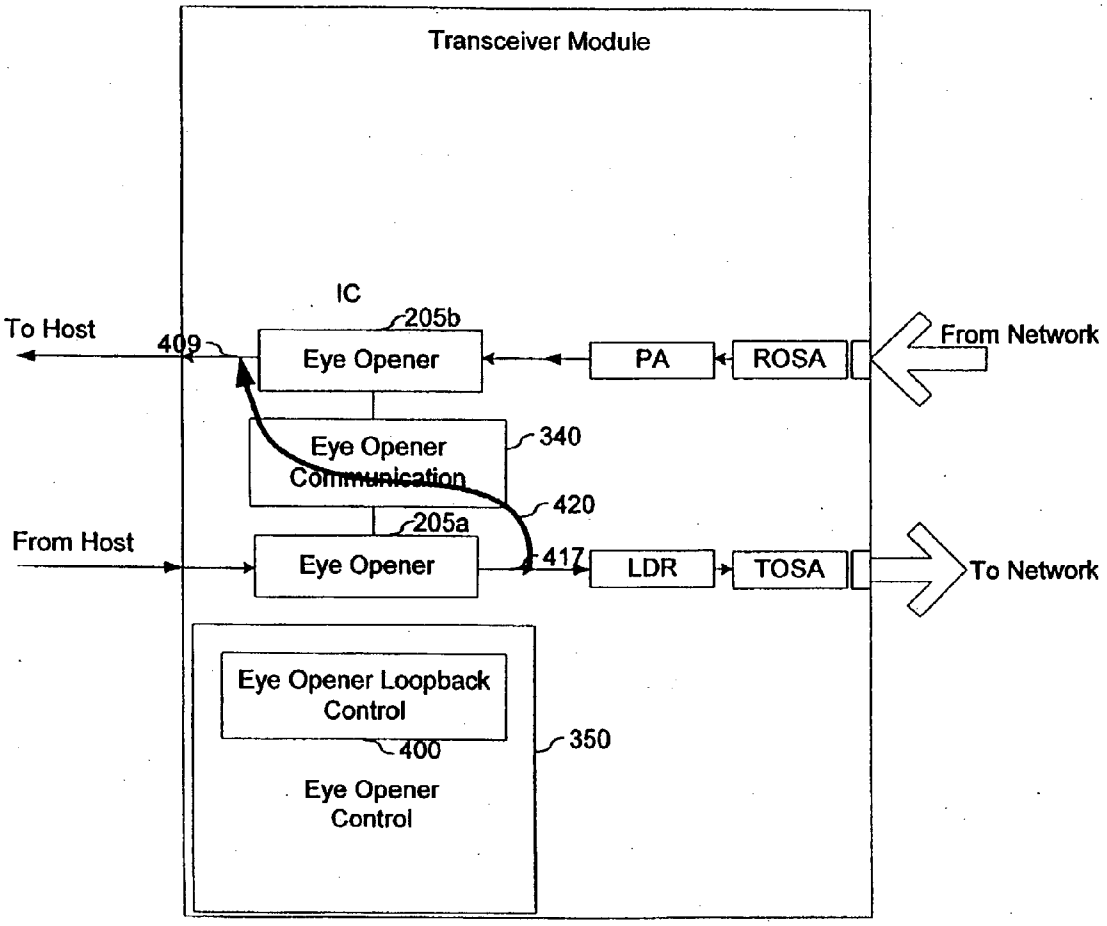
Transceiver Module
IC
205b
To Host
409
Eye Opener
PA
ROSA
From Network
Eye Opener
Communication
340
420
205a
From Host
Eye Opener
417
LDR
TOSA
To Network
Eye Opener Loopback
Control
400
350
Eye Opener
Control

Fig. 12C

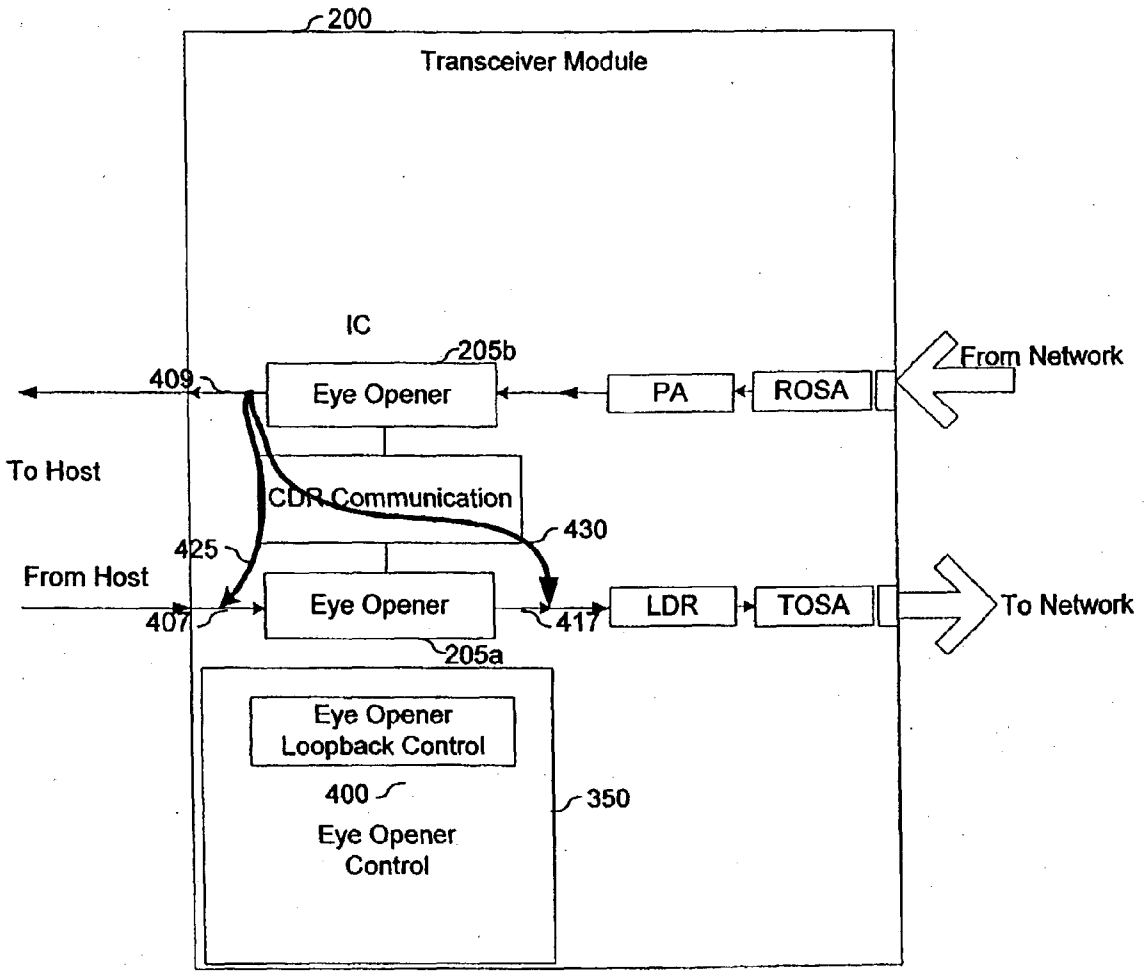
200
Transceiver Module
IC
205b
409
Eye Opener
PA
ROSA
From Network
To Host
CDR Communication
430
425
From Host
Eye Opener
LDR
TOSA
To Network
407
417
205a
Eye Opener
Loopback Control
400
350
Eye Opener
Control

Fig. 12 D

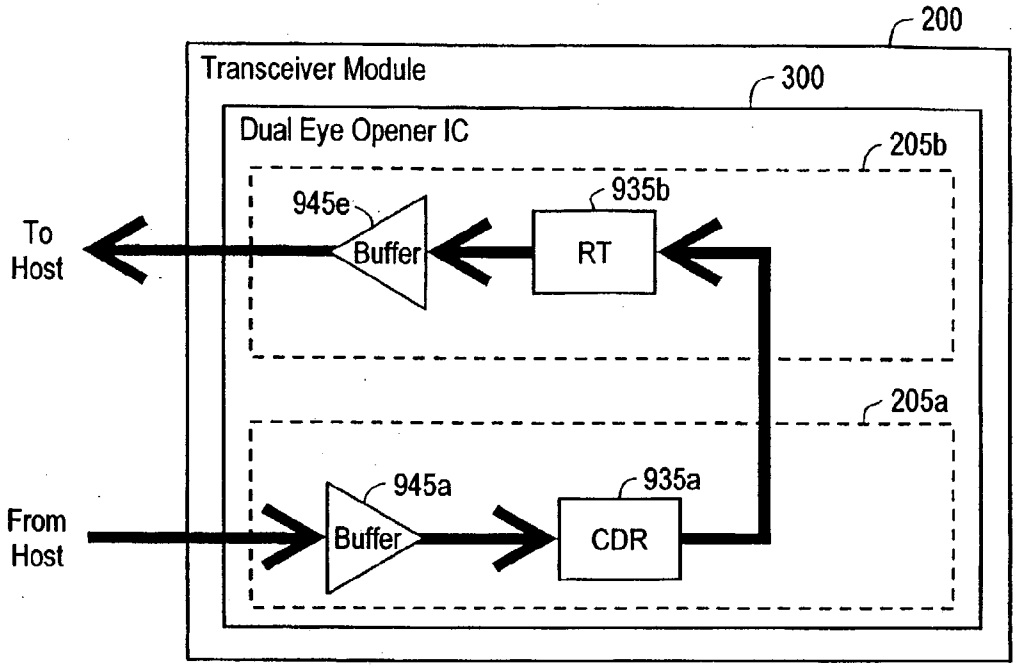

Fig. 13A

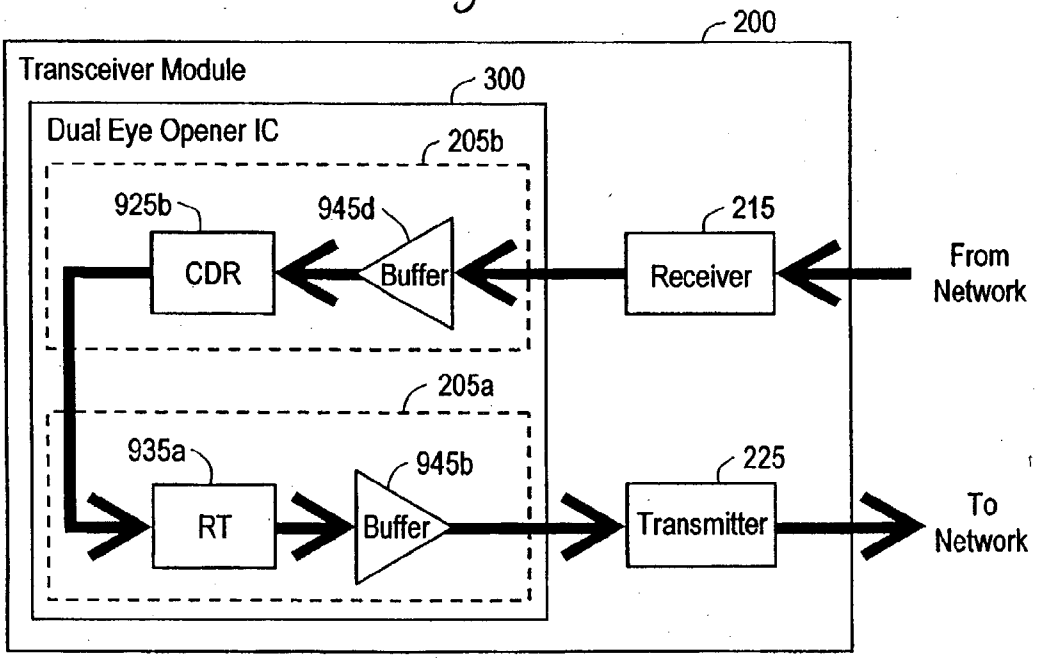

Fig. 13B

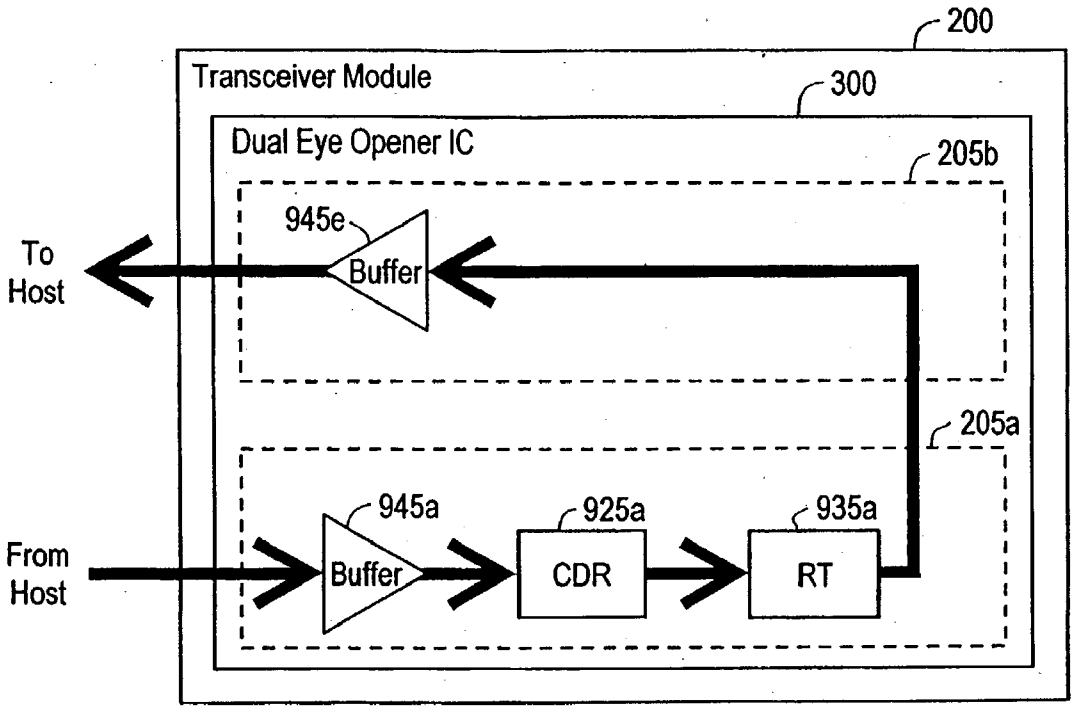

Fig. 13C

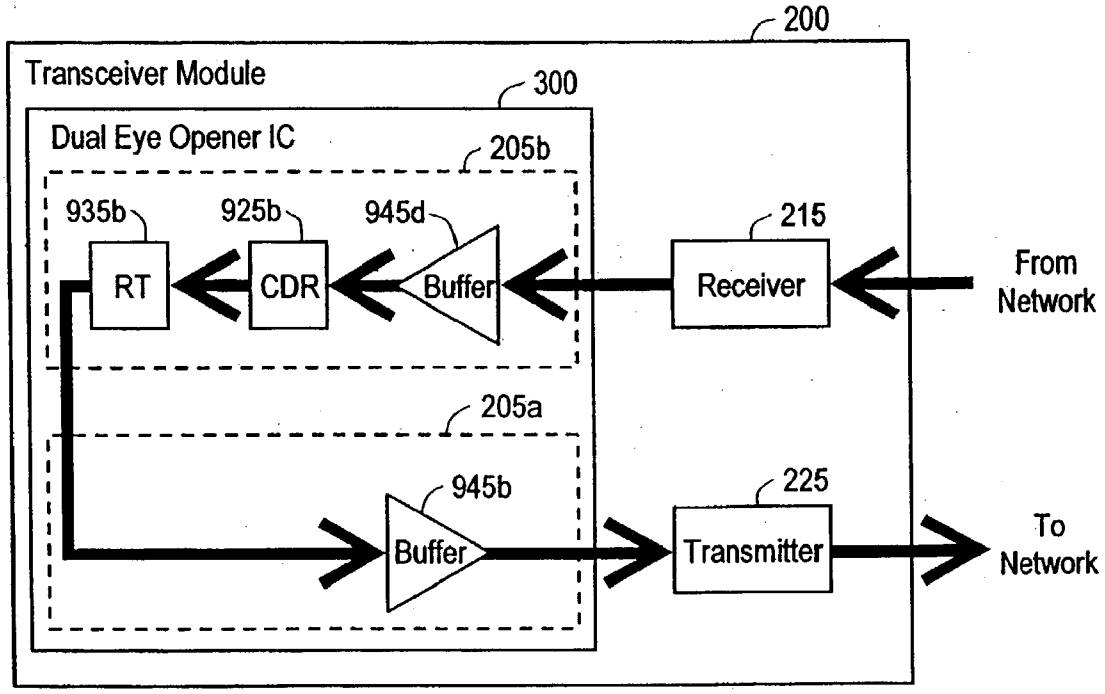

Fig 13D

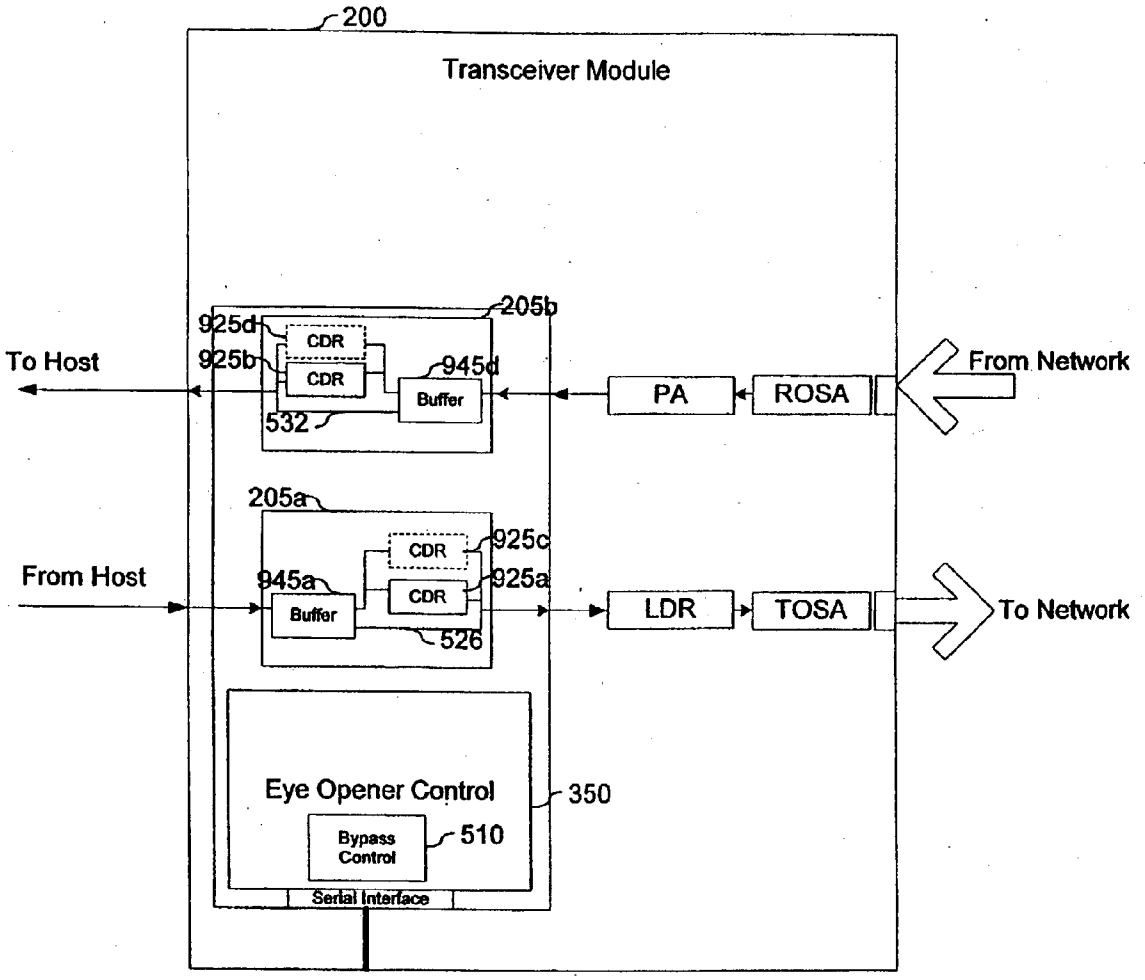
200
Transceiver Module
205b
925d
925b
CDR
CDR
945d
Buffer
532
To Host
PA
ROSA
From Network
205a
CDR
925c
925a
CDR
945a
Buffer
526
From Host
LDR
TOSA
To Network
Eye Opener Control
350
Bypass Control
510
Serial Interface

Fig. 14

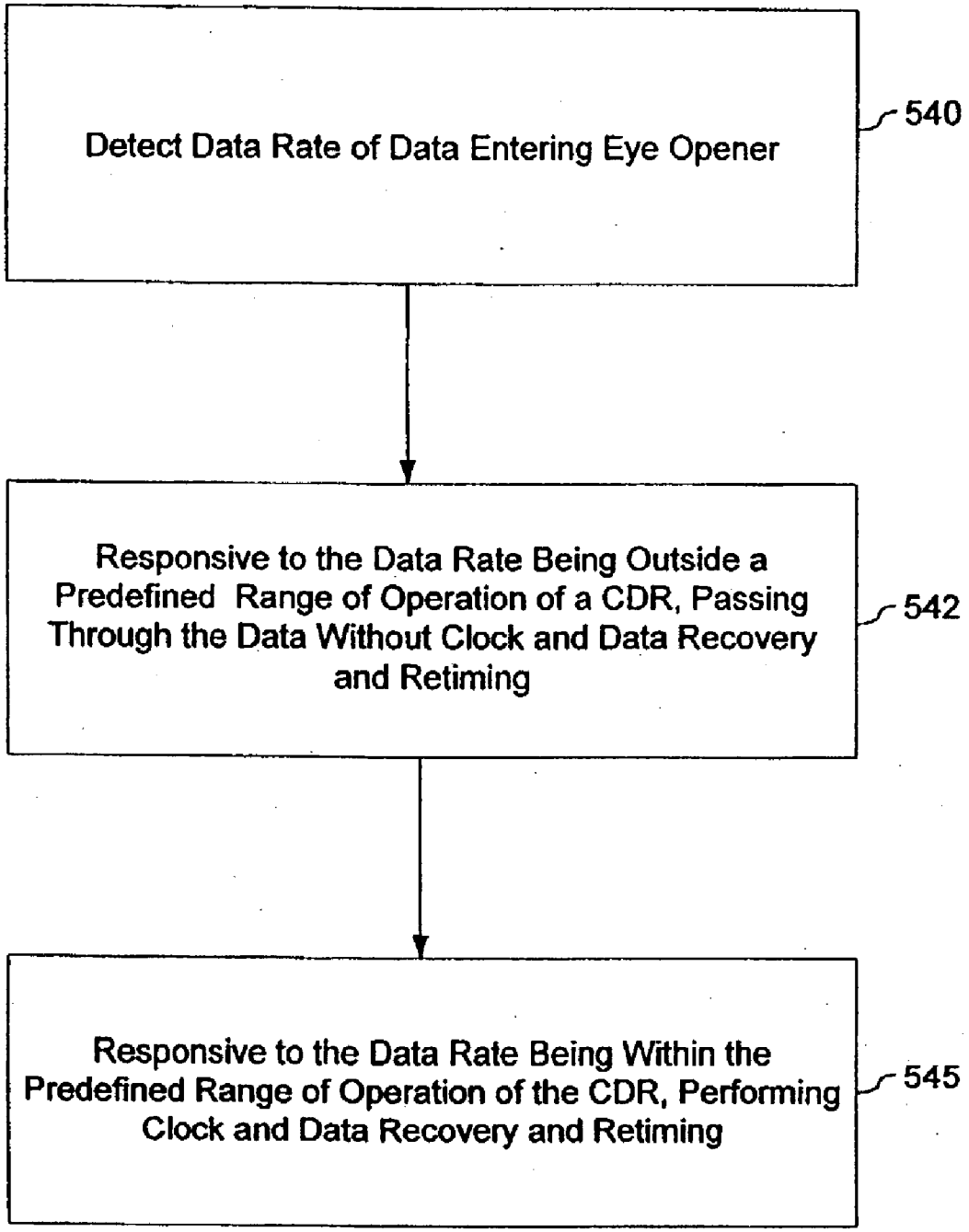
Detect Data Rate of Data Entering Eye Opener
540
Responsive to the Data Rate Being Outside a Predefined Range of Operation of a CDR, Passing Through the Data Without Clock and Data Recovery and Retiming
542
Responsive to the Data Rate Being Within the Predefined Range of Operation of the CDR, Performing Clock and Data Recovery and Retiming
545

Fig. 15

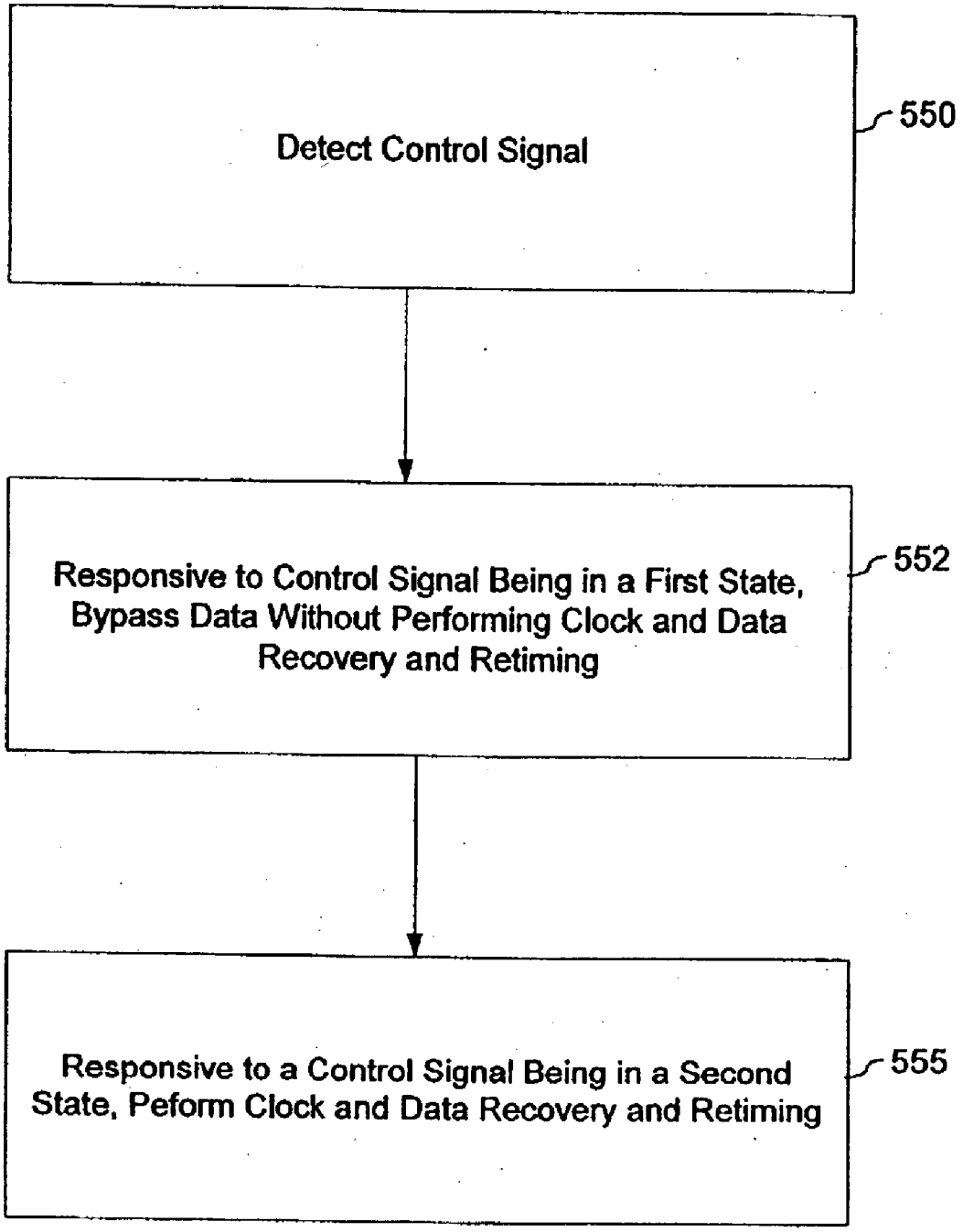
Detect Control Signal
550
Responsive to Control Signal Being in a First State, Bypass Data Without Performing Clock and Data Recovery and Retiming
552
Responsive to a Control Signal Being in a Second State, Peform Clock and Data Recovery and Retiming
555

Fig. 16

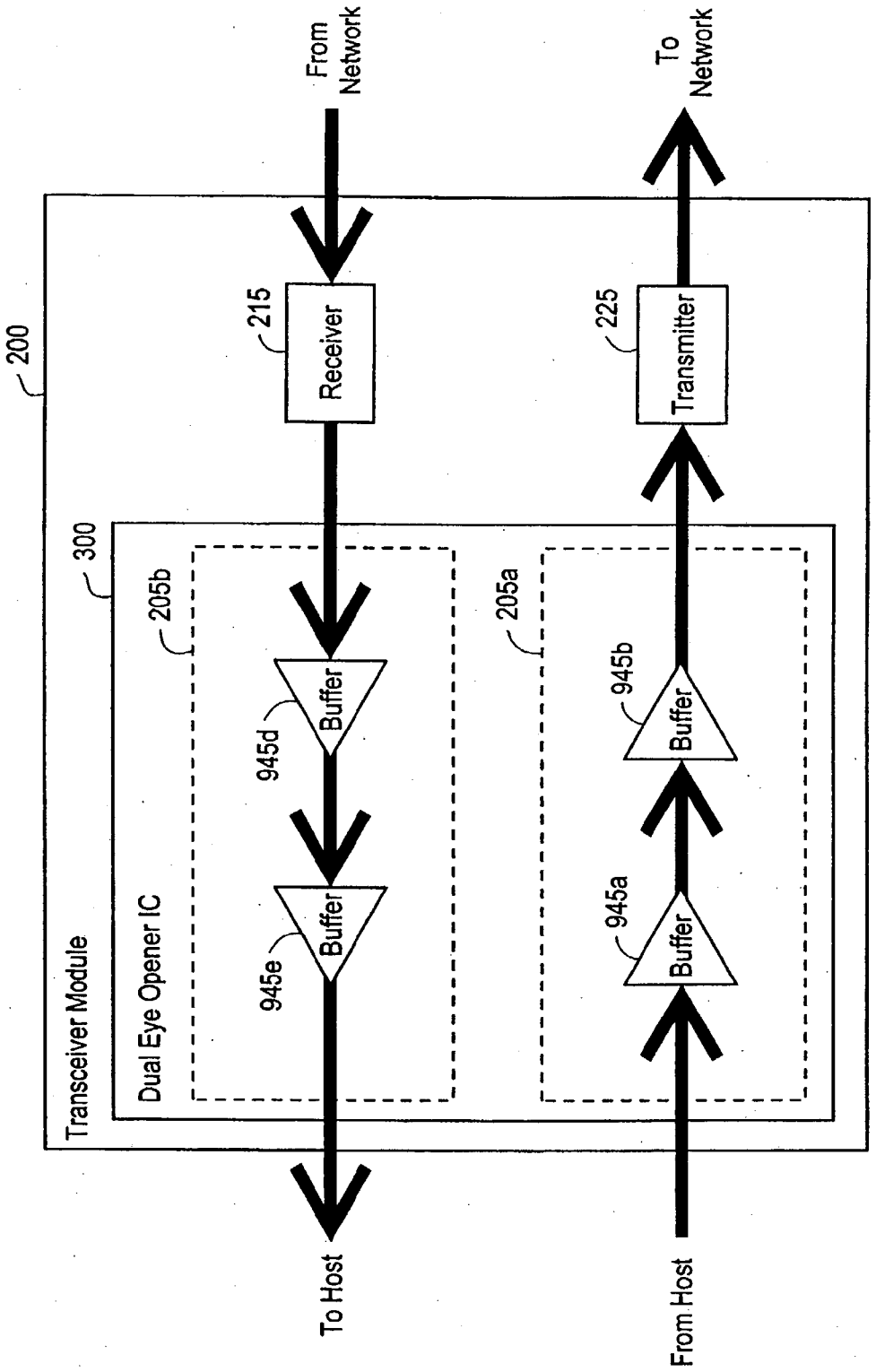
200
Transceiver Module
300
Dual Eye Opener IC
205b
205a
215
Receiver
225
Transmitter
945d
Buffer
945e
Buffer
945b
Buffer
945a
Buffer
From Network
To Network
To Host
From Host

Fig. 17

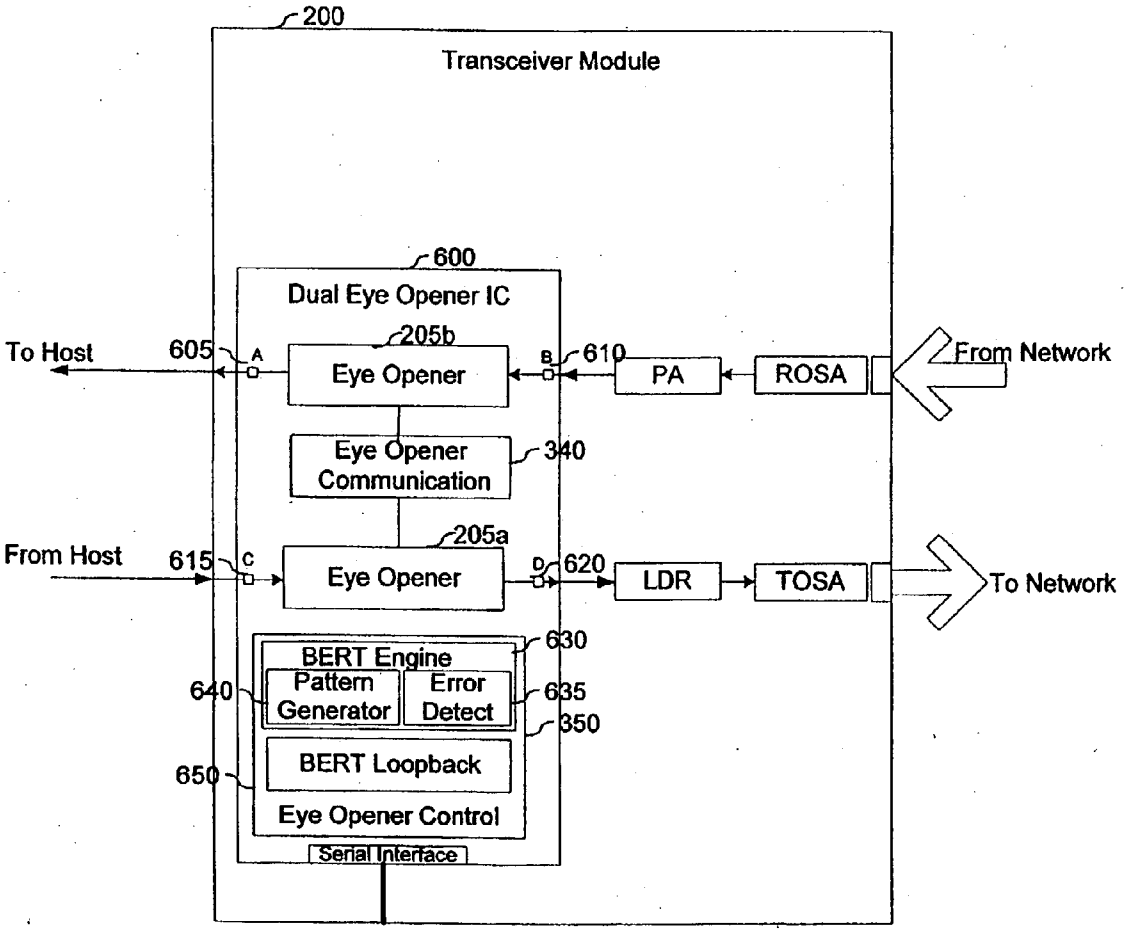
200
Transceiver Module
600
Dual Eye Opener IC
205b
To Host
605
A
Eye Opener
B
610
PA
ROSA
From Network
Eye Opener Communication
340
205a
From Host
615
C
Eye Opener
D
620
LDR
TOSA
To Network
BERT Engine
630
640
Pattern Generator
Error Detect
635
350
BERT Loopback
650
Eye Opener Control
Serial Interface

Fig. 18

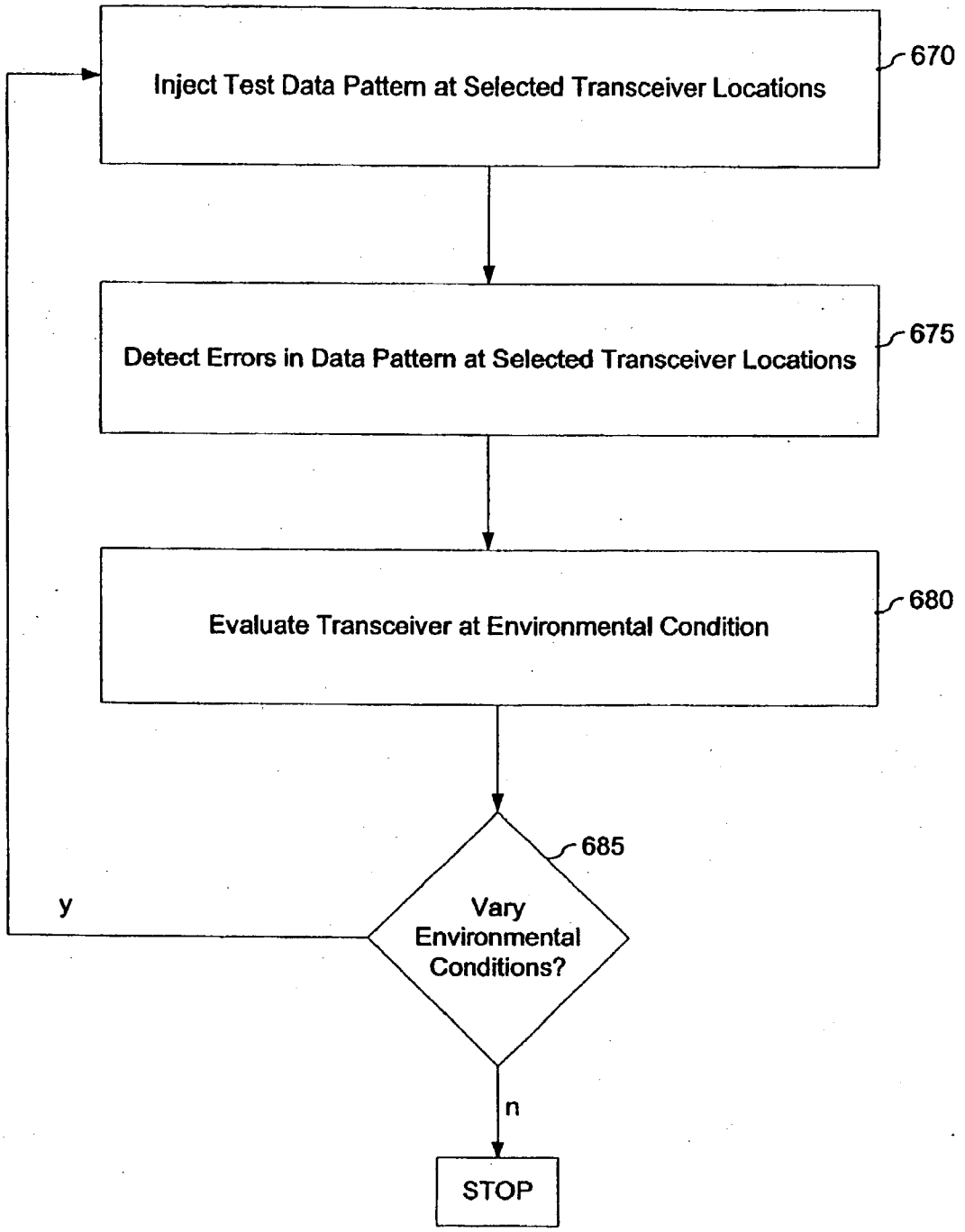
Inject Test Data Pattern at Selected Transceiver Locations
670
Detect Errors in Data Pattern at Selected Transceiver Locations
675
Evaluate Transceiver at Environmental Condition
680
Vary Environmental Conditions?
685
y
n
STOP

Fig. 19

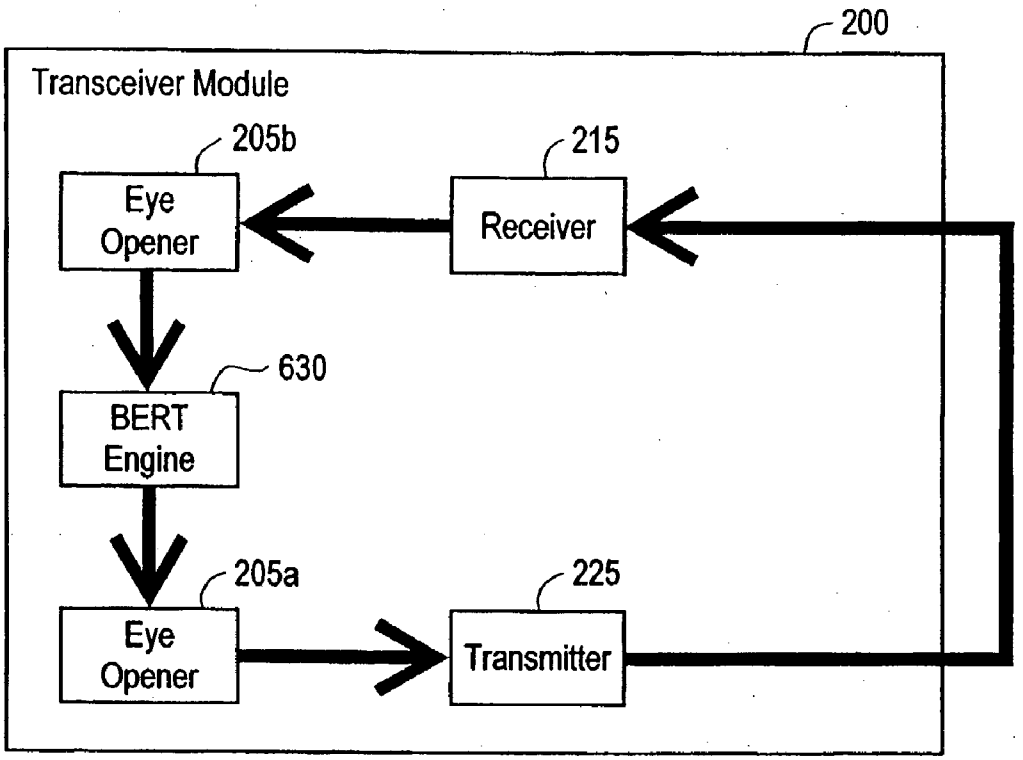

Fig. 20A

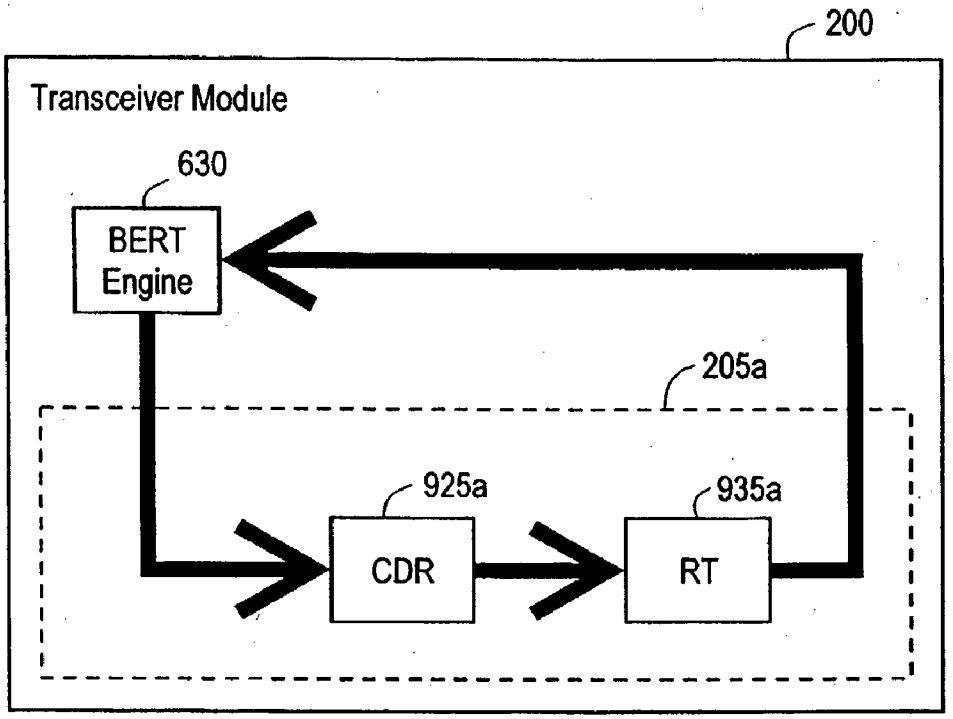

Fig. 20B

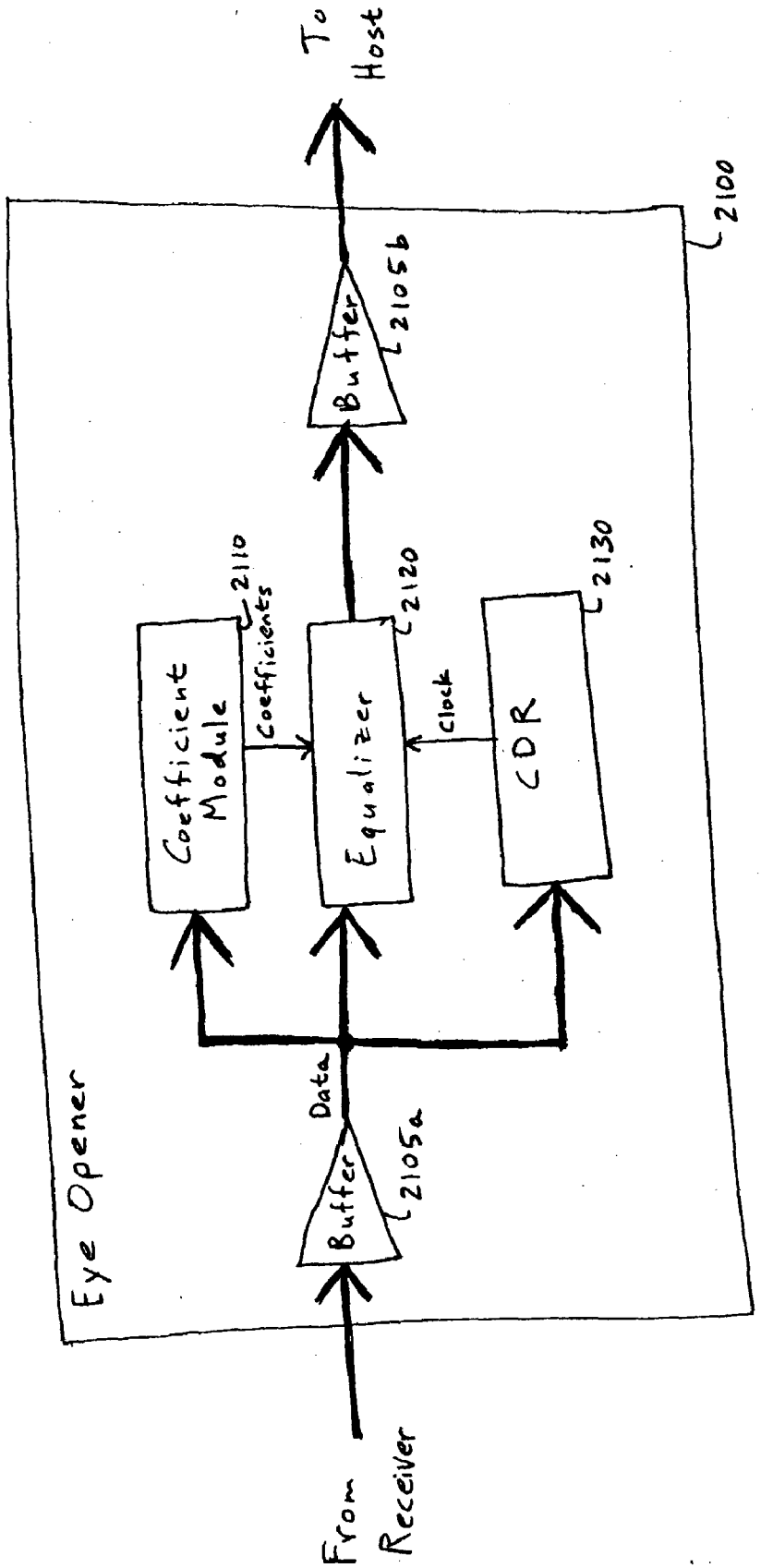
Eye Opener
2100
From Receiver
Buffer
2105a
Data
Coefficient Module
2110
Coefficients
Equalizer
2120
Clock
CDR
2130
Buffer
2105b
To Host

Fig. 21A

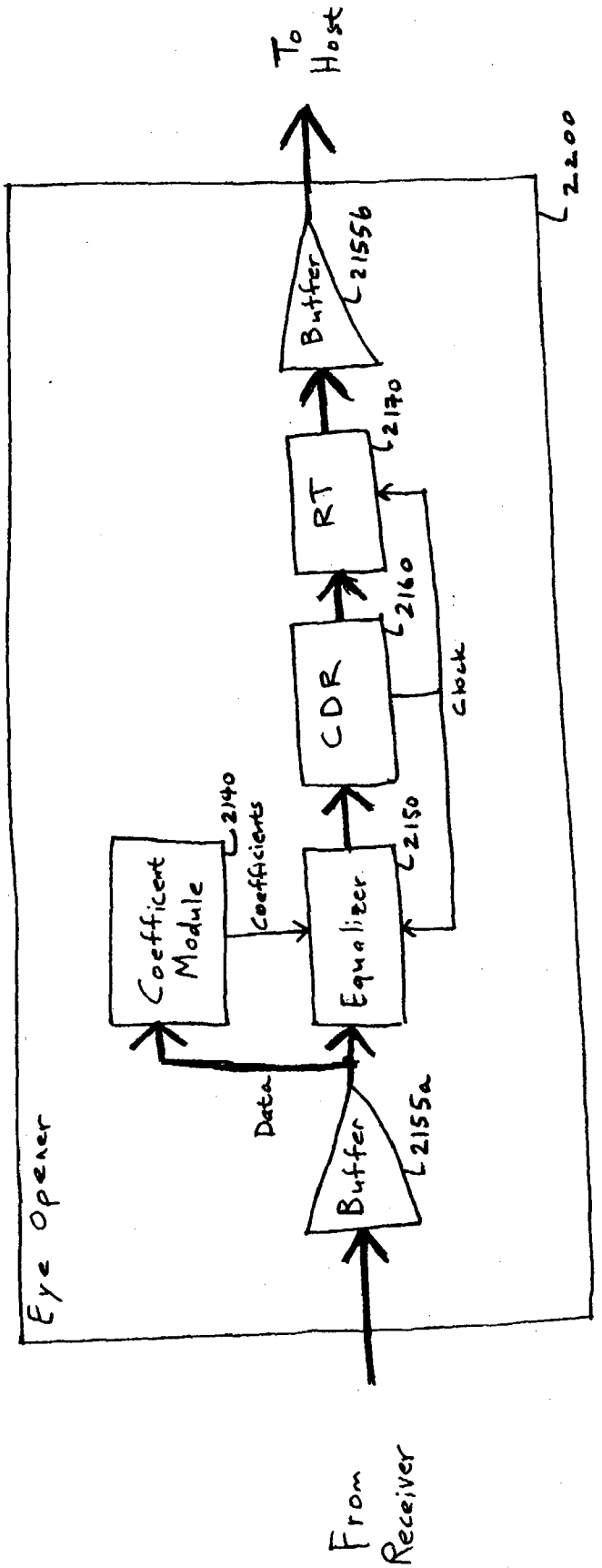
To Host
2200
Buffer
2155b
RT
2170
CDR
2160
Clock
Coefficient Module
2140
Coefficients
Equalizer
2150
Data
Buffer
2155a
Eye Opener
From Receiver

Fig. 21B

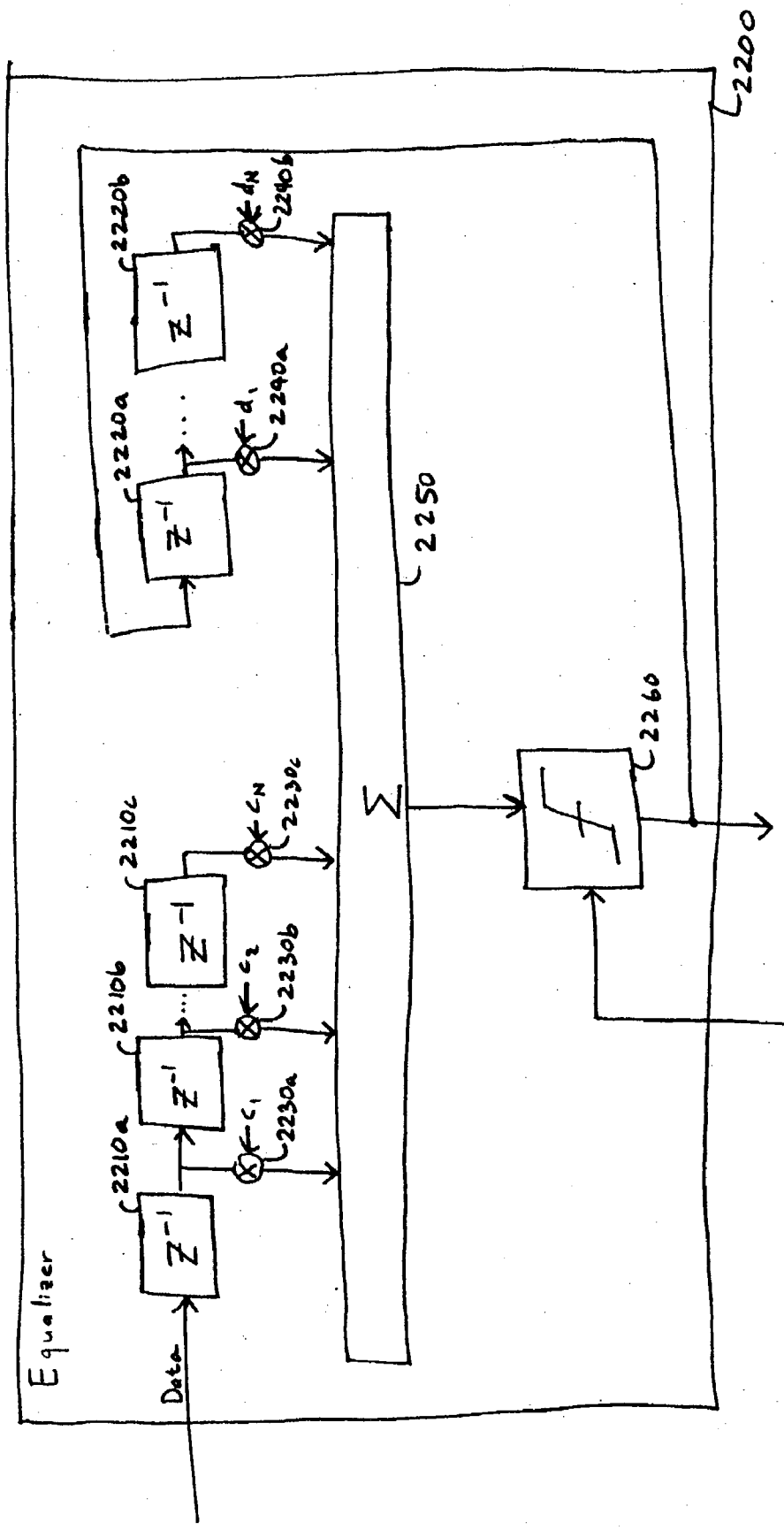
Equalizer
Data
2200
2210a
2210b
2210c
2220a
2220b
2230a
2230b
2230c
2240a
2240b
2250
2260
Clock

Fig. 22

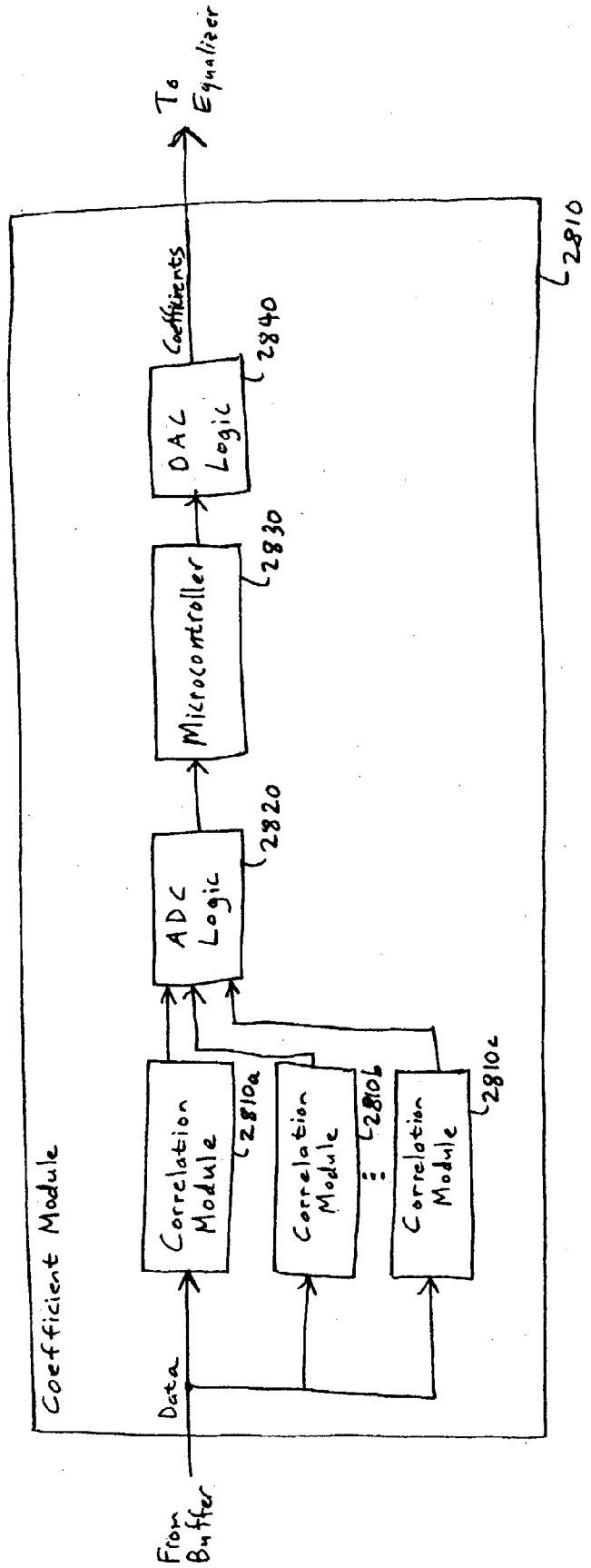
To Equalizer
Coefficients
2810
DAC Logic
2840
Microcontroller
2830
ADC Logic
2820
Correlation Module
2810a
Correlation Module
2810b
Correlation Module
2810c
Coefficient Module
Data
From Buffer

Fig. 23

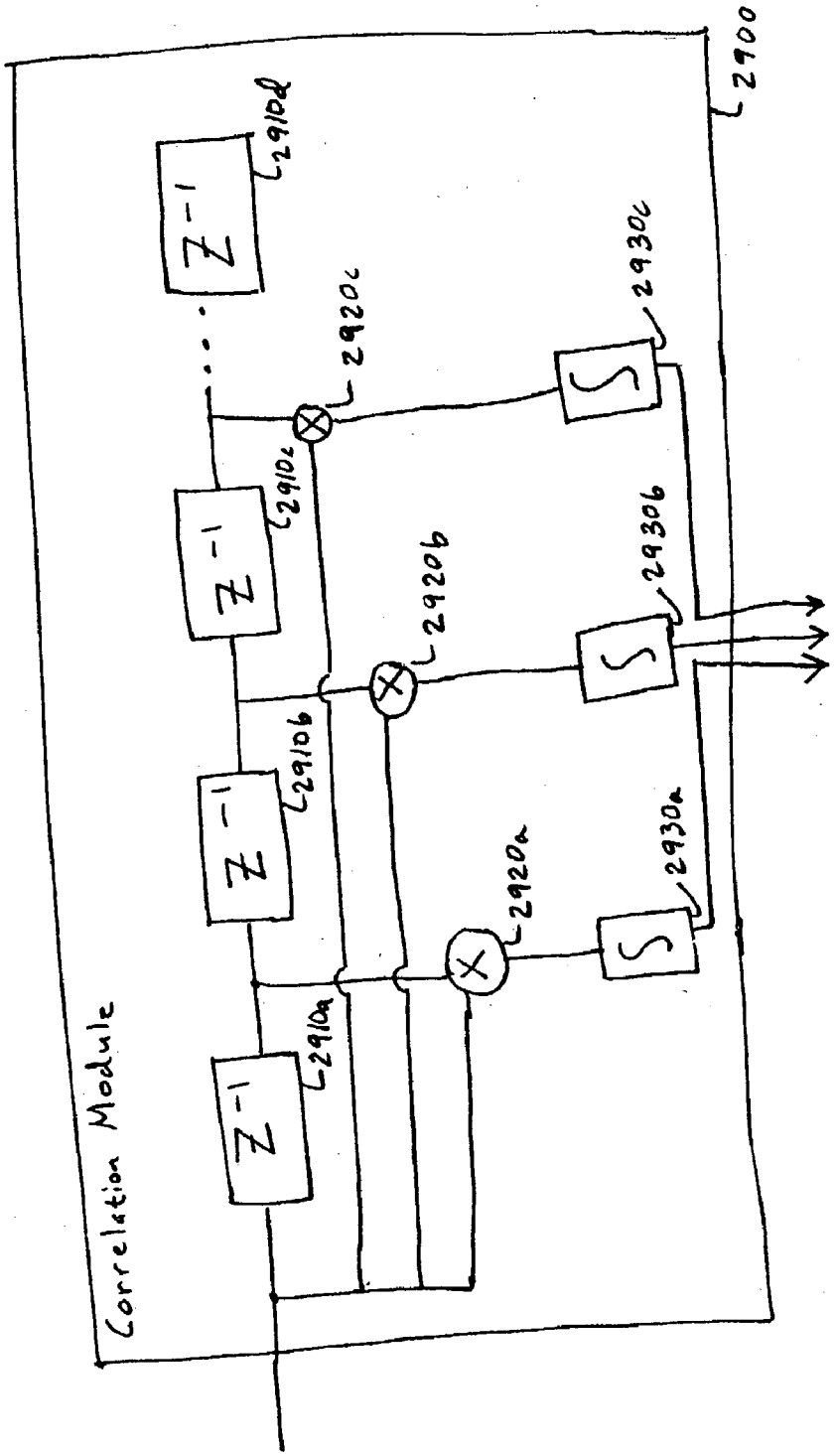
Correlation Module
2900
Z^{-1}
2910a
2910b
2910c
2910d
2920a
2920b
2920c
2930a
2930b
2930c

Fig. 24

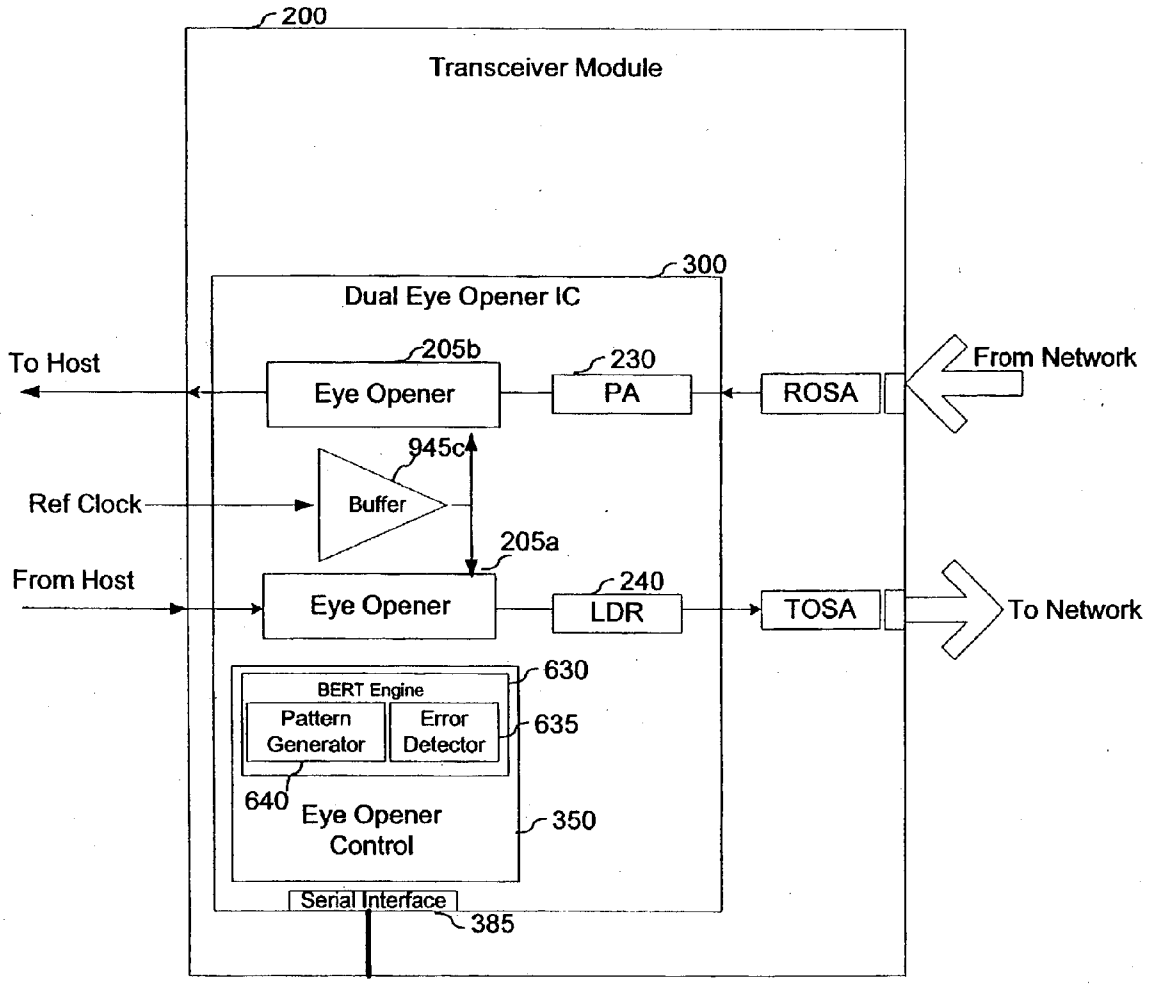
200
Transceiver Module
300
Dual Eye Opener IC
To Host
205b
Eye Opener
230
PA
ROSA
From Network
945c
Ref Clock
Buffer
205a
From Host
Eye Opener
240
LDR
TOSA
To Network
630
BERT Engine
Pattern Generator
Error Detector
635
640
Eye Opener Control
350
Serial Interface
385

Fig. 25

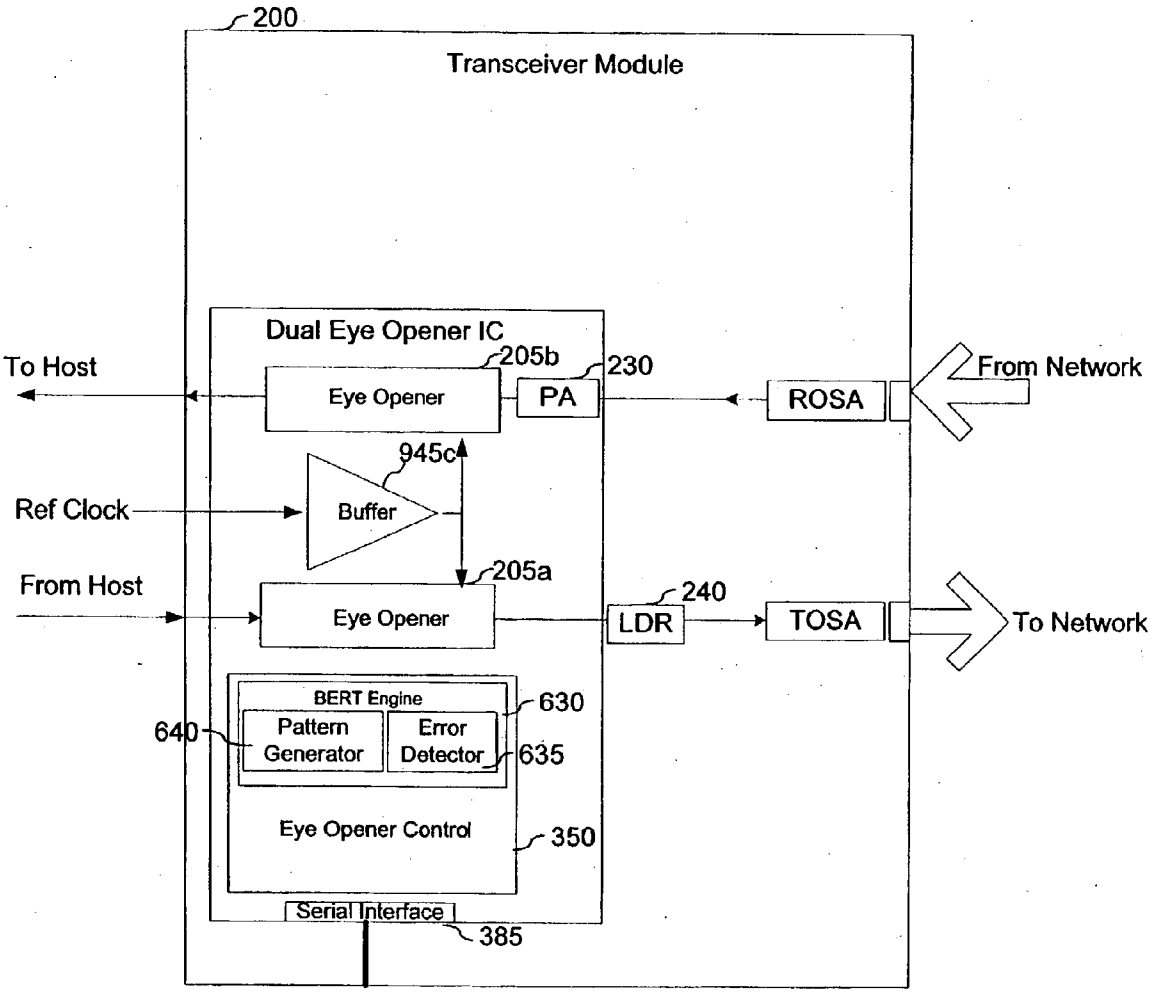
200
Transceiver Module
Dual Eye Opener IC
205b
230
To Host
Eye Opener
PA
ROSA
From Network
945c
Ref Clock
Buffer
205a
From Host
Eye Opener
240
LDR
TOSA
To Network
BERT Engine
630
640
Pattern Generator
Error Detector
635
Eye Opener Control
350
Serial Interface
385

Fig. 26

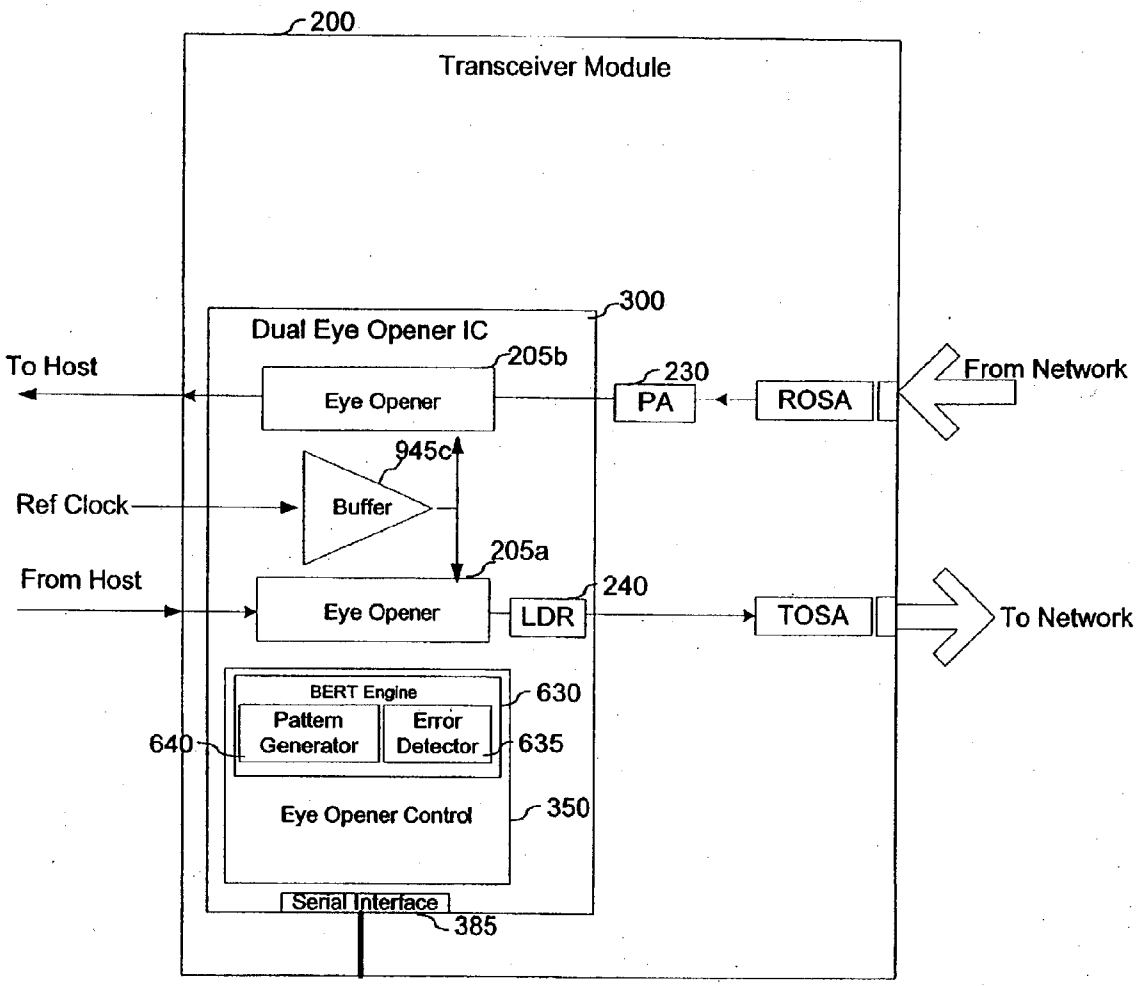
200
Transceiver Module
300
Dual Eye Opener IC
To Host
205b
Eye Opener
230
PA
ROSA
From Network
945c
Ref Clock
Buffer
205a
From Host
Eye Opener
240
LDR
TOSA
To Network
BERT Engine
630
Pattern Generator
Error Detector
640
635
Eye Opener Control
350
Serial Interface
385

Fig. 27

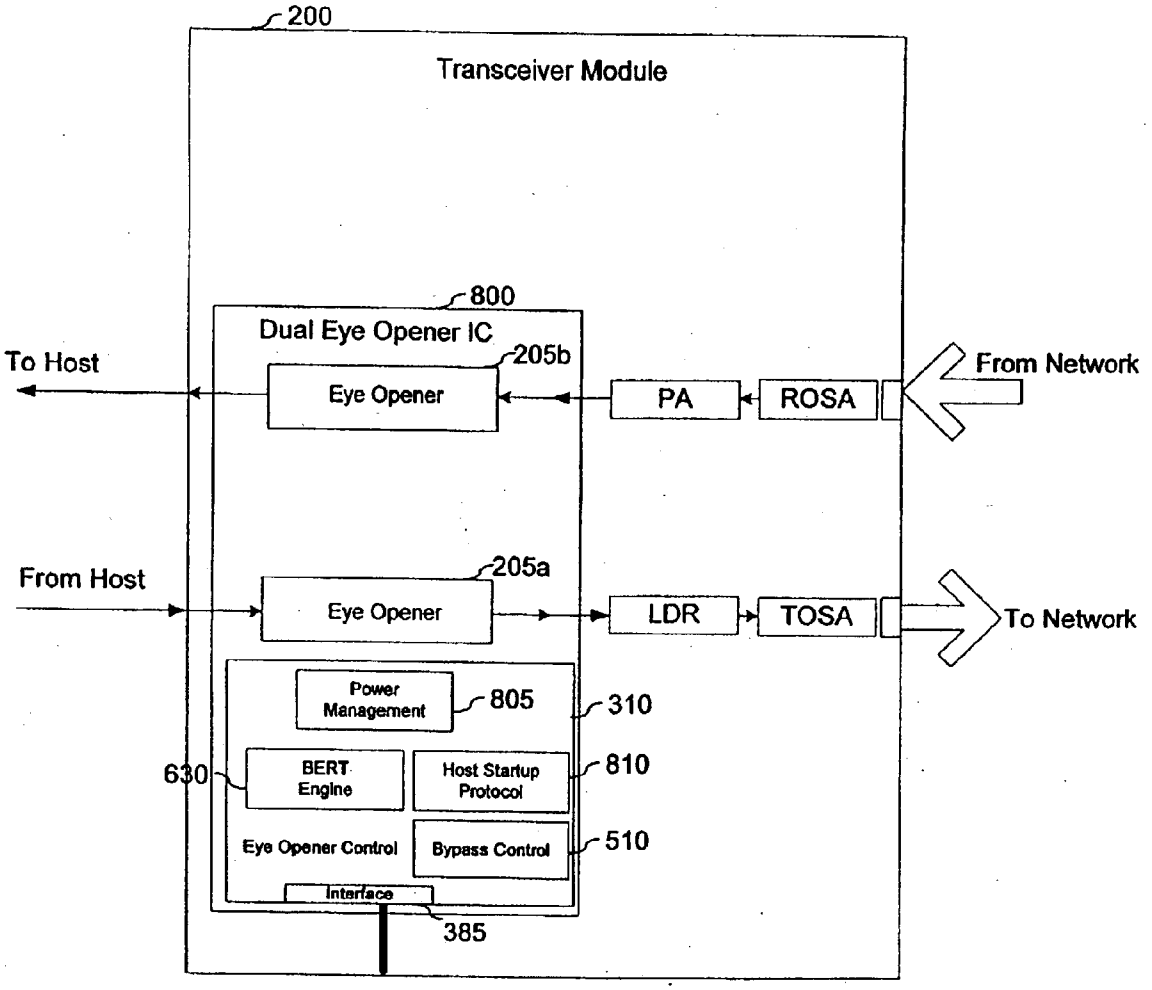
200
Transceiver Module
800
Dual Eye Opener IC
205b
To Host
Eye Opener
PA
ROSA
From Network
205a
From Host
Eye Opener
LDR
TOSA
To Network
Power Management
805
310
630
BERT Engine
Host Startup Protocol
810
Eye Opener Control
Bypass Control
510
Interface
385

Fig. 28

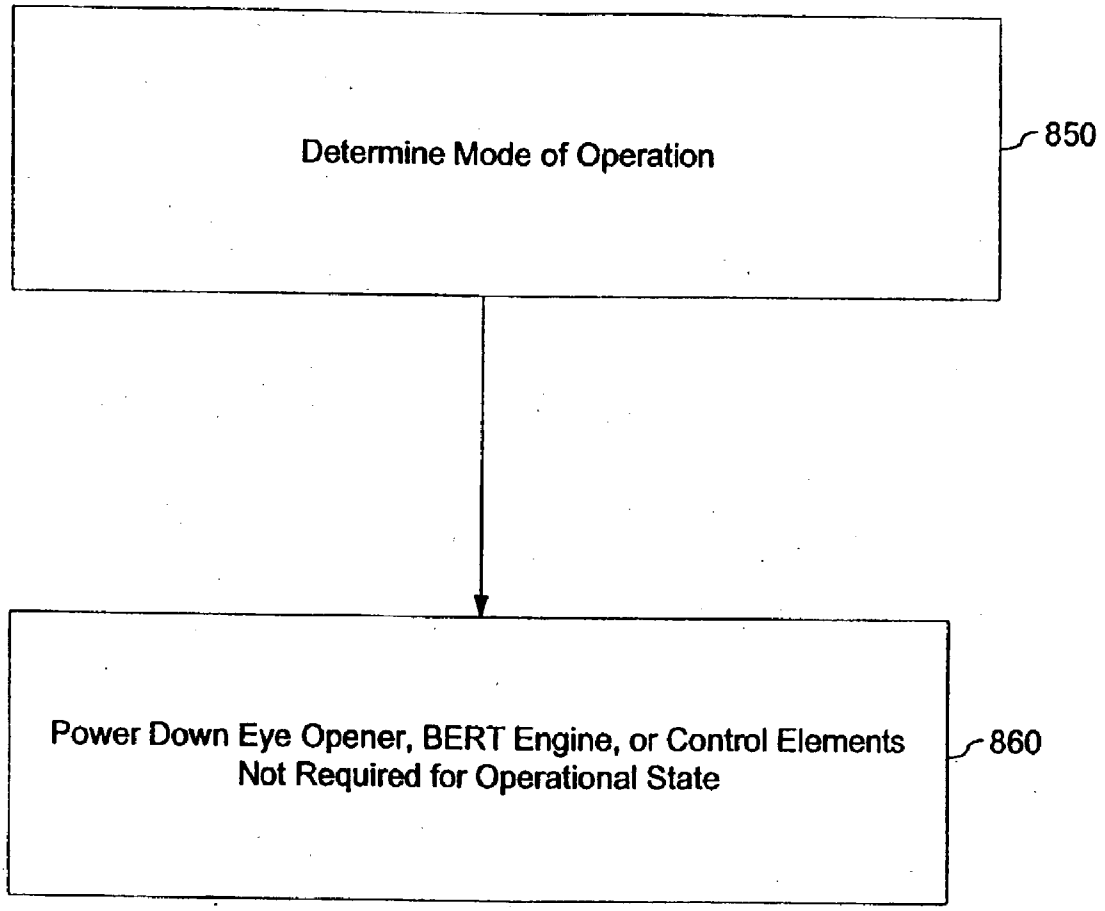
Determine Mode of Operation
850
Power Down Eye Opener, BERT Engine, or Control Elements Not Required for Operational State
860

Fig. 29

TRANSCEIVER MODULE AND INTEGRATED CIRCUIT WITH DUAL EYE OPENERS

CROSS-REFERENCE TO RELATED APPLICATIONS

[0001] This application claims priority under 35 U.S.C. § 119(e) to U.S. Provisional Patent Application Ser. No. 60/410,509, "Clock and Data Recovery-Retiming Transceiver IC," by Lewis B. Aronson et al., filed Sep. 13, 2002; and to U.S. Provisional Patent Application Ser. No. 60/391,877, "Clock and Data Recovery Transceiver Module," by Lewis B. Aronson et al., filed Jun. 25, 2002. The subject matter of all of the foregoing is incorporated herein by reference in their entirety.

BACKGROUND

[0002] A. Technical Field

[0003] The present invention relates generally to ensuring data integrity within a networking box, and more particularly, to on-chip clock and data recovery in a transceiver module.

[0004] B. Background of the Invention

[0005] The proliferation and significance of networking technology is well known. The ever-increasing demand for network bandwidth has resulted in the development of technology that increases the amount of data traveling across a network. Advancements in modulation techniques, coding algorithms and error correction have drastically increased rates of this data. For example, a few years ago, the highest rate that data could travel across a network was at approximately one Gigabit per second (Gb/s). This rate has increased ten-fold today where data travels across Ethernet and SONET (Synchronous Optical Network) networks at upwards of 10 Gb/s. For instance, the XFP (10 Gb/s serial electrical interface) Pluggable Module Multi-Source Agreement is directed at transceivers operating at approximately 10 Gb/s.

[0006] FIG. **1** illustrates some of the shortcomings of a transceiver module **100** commonly used in prior art networking devices. The transceiver module **100** is coupled to a network via interfaces **130**, **135** and to a host device **105** such as a media access controller ('MAC') card or SONET framer. The transceiver module **100** has a receiver **115** that is coupled to network interface **130** and a first serializer/deserializer ('SERDES') **110**. The first SERDES **110** is coupled to the host **105** via a parallel bus **140**. An example of this parallel bus **140** may be a (XAUD) 10-Gigabit Attachment Unit Interface that has four 3.125 Gb/s channels that transfer an aggregate 10 Gb/s data stream between the transceiver module **100** and the host **105**. The transceiver module **100** also has a transmitter **125** that is coupled to network interface **135** and a second SERDES **120**. The second SERDES **120** is coupled to the host **105** via a second parallel bus **145** such as the XAUI described above.

[0007] In operation, a serial optical data stream received by the transceiver module **100** is converted to an electrical serial data stream by the receiver **115**. This electrical serial data stream is deserialized by the SERDES **110** into four channels and transmitted via the parallel bus **140** to the host **105** for processing. This deserialization occurs in order to prevent further bandwidth degradation of the electrical data stream and stay below a jitter budget as it continues to travel along the data path. A high data rate electrical signal (e.g., 10 Gb/s) is more easily distorted by imperfections within the data path and by the inductance of the bus and connections along the data path. Reflections caused by discontinuities within a transmission line and amplitude degradations caused by nodes within a path (e.g., wire bond, solder bump, etc.) may significantly increase errors within the signal and increase jitter beyond an acceptable threshold or budget. Additionally, inductance is proportionally more severe at higher frequencies. Thus, the data stream is deserialized onto parallel transmission lines in order to reduce the rate on each of these lines and minimize degradation along the data path.

[0008] A similar deserialization occurs on the transmit side of the transceiver module **100** for the same reasons described above. In particular, a deserialized electrical data stream is transferred from the host **105** to the second SERDES **120** via parallel bus **145**. The second SERDES **120** serializes this electrical signal. The transmitter **125** converts the serial electrical signal to an optical signal and transmits it onto the network.

[0009] One drawback of module **100** is that the SERDES **110**, **120** and the interfaces to the parallel buses **140**, **145** require a relatively large amount of space on the transceiver module **100**. Additionally, SERDES consume power and release a relatively large amount of heat. Another drawback of module **100** is that conventional transceiver modules do not include convenient, cost-effective means to monitor the status of data paths and confirm proper operation of the transceiver.

[0010] Fiberoptic modules operating at data rates less than 10 Gb/s commonly employ serial electrical interfaces without any means of resetting the jitter budget at the inputs and outputs of the module **100**. The most common data rates for these modules are at 1.0625 Gb/s for Fibre Channel, 1.25 Gb/s for Gigabit Ethernet, 2.125 Gb/s for double-rate Fibre Channel, 2.48 Gb/s for OC-48, 2.7 Gb/s for forward error correction ('FEC') rates of OC-48, and numerous rates less than 1 Gb/s for other applications. Serial modules are also used for proprietary links at data rates from less than 1 Gb/s to about 3.125 Gb/s. At these relatively low data rates, there is no need to perform reshaping or retiming of the data at the electrical inputs and outputs ('I/Os') of the module because the signal degradations at those data rates are sufficiently small. However, at data rates approaching or exceeding 10 Gb/s, the bit periods become sufficiently short so that signal degradations are difficult to minimize using conventional approaches to serial modules. Additionally, serial modules at data rates lower than 10 Gb/s can have digital or analog monitoring functions, but the types of error monitoring or diagnostic features that are possible in a module incorporating an integrated SERDES have not thus far implemented.

[0011] Moreover, the XFP standard requires that transceiver modules handle data rates of approximately 10 Gb/s, while outputting to the host through a serial interface among other things. Particularly, an XFI (10 Gb/s serial electrical interface) is designed for serial input from an XFP transceiver. This allows host designers and manufacturers to supply host systems assuming that XFP transceivers will perform the discussed functions.

[0012] Therefore, it is desirable to provide a transceiver module capable of handling 10 Gb/s data input from a network within a jitter budget. It is further desirable to provide a transceiver module that interfaces with a host using serial connections, thereby allowing the removal of SERDES components from the module. Additionally, it is desirable to provide additional functionality, for example error monitoring functionality that is integrated within the transceiver module that would identify errors and perform bit error rate tests ('BERTs') within a data path and/or component on the module.

SUMMARY OF THE INVENTION

[0013] The present invention overcomes the limitations of the prior art by providing a transceiver module with eye diagram opening functionality for reducing jitter. In one implementation, an optical transceiver module has a serial electrical interface with an electrical output port and an electrical input port. The module also has a receive path and a transmit path. The receive path includes an optical input port, a receiver eye opener and the electrical output port of the serial electrical interface. An optical signal is received by the module at the optical input port. The receiver eye opener retimes and reshapes a serial electrical data stream based on the received optical signal. The retimed and reshaped serial electrical data stream is transmitted from the module via the electrical output port. The transmit path includes the electrical input port of the serial electrical interface, a transmitter eye opener and an optical output port. A second serial electrical data stream is received by the module at the electrical input port. The transmitter eye opener retimes and reshapes the received serial electrical data stream. An optical signal based on the retimed and reshaped serial electrical data stream is transmitted from the module via the optical output port.

[0014] In one implementation, the receiver eye opener and the transmitter eye opener are implemented in a single integrated circuit. The integrated circuit may also include none, some or all of the following: digital to analog converters for example for converting received digital signals to analog control signals, a bypass module for example for bypassing the eye opener(s) under certain conditions, loopback data paths for example for performing diagnostic tests, bit error rate (BERT) tester, adaptive equalizer(s) for example for conditioning the serial data streams, power amplifier or other components for the receiver, driver (e.g., laser driver) or other components for the transmitter, a control module and/or a serial control interface for controlling the circuitry. The integrated circuit may also include various power down or reduced power modes in order to conserve energy. In another aspect, the data path(s) may include two or more eye openers, each suited for a different data rate. Switching between the eye openers permits the accommodation of different data rates.

[0015] Other aspects of the invention include applications, systems and methods corresponding to the devices described above.

BRIEF DESCRIPTION OF THE DRAWINGS

[0016] FIG. **1** is an illustration of a prior art transceiver module having a parallel connection to a host.

[0017] FIG. **2** is an illustration of a system including a transceiver module (e.g., an XFP 10 Gb/s module) comprised of dual eye openers and having a serial connection to a host according to an embodiment of the present invention.

[0018] FIG. **3** is an example of an Integrated Circuit (IC) for providing eye opening functionality to a receiver data path with a serial connection to a host.

[0019] FIG. **4** is an example of an IC for providing eye opening functionality to a transmitter data path with a serial connection to a host.

[0020] FIG. **5** is an illustration of a transceiver module having dual eye openers integrated on a single chip according to an embodiment of the present invention.

[0021] FIG. **6** is an illustration of a transceiver module having a communications path integrated with dual eye openers according to an embodiment of the present invention.

[0022] FIG. **7** is an illustration of a control module having a serial interface in a transceiver module having dual eye openers according to an embodiment of the present invention.

[0023] FIG. **8** is an example of an IC for providing dual eye opening functionality to a transceiver data path with a serial connection to a host.

[0024] FIG. **9** is an additional example of an IC for providing dual eye opening functionality to a transceiver data path with a serial connection to a host.

[0025] FIG. **10** illustrates a transceiver module comprising a DAC integrated on a chip with dual eye openers.

[0026] FIG. **11** illustrates a first DAC integrated into the receiver eye opener and a second DAC integrated into the transmitter eye opener.

[0027] FIGS. **12**A-D are block diagrams of loopback modes.

[0028] FIGS. **13**A-D are logic diagrams of loopback modes of an integrated chip with dual eye openers.

[0029] FIG. **14** is an illustration of a transceiver module with bypass functionality integrated with a transmitter and a receiver each having multiple CDR components according to an embodiment of the present invention.

[0030] FIG. **15** is a flowchart illustrating a first method bypass method operable in a transceiver module with an integrated transmitter and receiver, each having multiple CDRs.

[0031] FIG. **16** is a flow chart of a second bypass method operable in a transceiver module with a transmitter and a receiver each having multiple CDR components according to an embodiment of the present invention.

[0032] FIG. **17** is an embodiment of the bypass functionality of a dual eye opener IC such as in FIGS. **8** or **9**.

[0033] FIG. **18** is an illustration of a transceiver module having a BERT engine integrated with dual eye openers according to an embodiment of the present invention.

[0034] FIG. **19** is a flow chart of a BERT testing method operable in a transceiver module having dual integrated eye openers.

[0035] FIGS. **20**A-B illustrate embodiments of the BERT functionality of an integrated chip with dual eye openers.

[0036] FIGS. **21**A-B illustrate embodiments of an eye opener having an equalizer.

[0037] FIG. **22** illustrates an embodiment of an equalizer according to the present invention.

[0038] FIG. **23** illustrates a coefficient module according to an embodiment of the present invention.

[0039] FIG. **24** illustrates a correlation module according to an embodiment of the present invention.

[0040] FIGS. **25-27** illustrate examples of component integration that may be implemented as part of an integrated circuit.

[0041] FIG. **28** is an illustration of a transceiver module having power management functionality integrated with dual eye openers according to an embodiment of the present invention.

[0042] FIG. **29** is a flow chart of a method for managing power of components on a transceiver module according to an embodiment of the present invention.

DETAILED DESCRIPTION OF THE PREFERRED EMBODIMENTS

[0043] An apparatus and method for providing serial connections between a transceiver module and host is described. In particular, clock and data recovery and error monitoring functionality is integrated on the transceiver module that allows these serial connections. One skilled in the art will recognize that embodiments of the present invention and description below may also be incorporated within a transponder module. In the following description, for purposes of explanation, specific details are set forth in order to provide an understanding of the invention. It will be apparent, however, to one skilled in the art that the invention can be practiced without these details. In other instances, structures and devices are shown in block diagram form in order to avoid obscuring the invention.

[0044] Reference in the specification to "one embodiment" or "an embodiment" means that a particular feature, structure, or characteristic described in connection with the embodiment is included in at least one embodiment of the invention. The appearances of the phrase "in one embodiment" in various places in the specification are not necessarily all referring to the same embodiment.

[0045] FIG. **2** is an illustration of a system including a transceiver module (e.g., an XFP 10 Gb/s module) comprised of dual eye openers and having a serial connection to a host according to an embodiment of the present invention. The receive path includes a receiver **215** coupled to a network and an eye opener **205**. The eye opener **205** is designed to clean up high frequency jitter, e.g., "open" the eye diagram of serial data streams for optical transceivers. The receiver **215** includes a receiver optical sub-assembly ('ROSA') **235** that receives and converts an optical signal to an electrical signal. The receiver **215** also includes a post-amplifier **230** that amplifies the electrical signal to an appropriate power level. One skilled in the art will recognize that the eye opener **205***b* and ROSA may be manufactured and packaged using multiple methods. For example, the eye opener and ROSA may be integrated within a single ASIC or manufactured separately.

[0046] The receiver eye opener **205***b* extracts a clock from the electrical signal and uses that recovered clock to regenerate degraded data within the signal. In particular, the receiver eye opener **205***b* provides retiming and reshaping that removes jitter (i.e., resets the jitter budget in the link). The retiming and reshaping function of the eye opener **205** may be implemented by a clock and data recovery ('CDR') and a retimer ('RT'), a signal conditioner, or any device capable of opening the eye diagram. Both passive and adaptive equalization circuits may be used for these purposes. The eye opener **205** is preferably responsive to the data rate of the data stream on the particular path. According to one embodiment, the receiver eye opener **205***b* includes a phase locked loop that aligns the phase of the electrical signal with a reference clock to ensure that the electrical signal is correctly clocked, and a signal shaper that filters noise from the signal and more accurately shapes the pulse edges in the signal. The eye openers **205***a,b* may be implemented as ASICs, as a configurable circuit such as an FPGA, or partly in software, to name but a few possibilities. One skilled in the art will recognize that there are numerous methods for providing eye opening functionality that operate in accordance with the present invention. After the electrical signal has been properly synchronized and shaped by the receiver eye opener **205***b*, it is transmitted to the host **105** via a serial path **260** such as an XFI-compliant 10 Gb/s transmission line.

[0047] Other advantageous functions may also be implemented herein along with the eye openers **205***a,b*. In some embodiments, bypass, also known as "pass-through", functions are incorporated in the eye openers **205***a*, **205***b* which allow the data to bypass the retiming and reshaping functions of the eye opener. These bypass functions can be automatically selected, for instance by use of a loss of lock ('LOL') signal, or selectable with a control line or digital control. The eye openers **205***a*, **205***b* may also have low power modes (power down modes) that are enabled via a control pin, or by control through a digital bus or two wire interface. The eye openers **205***a*, **205***b* may also have BERT functions whereby a BERT engine within the eye opener generates data and/or an error detector matches up incoming data to a predetermined pattern to check for errors in the data stream. In addition, the eye openers **205***a*, **205***b* may have loopback functions that allow the data to be looped back with the addition of some signal I/Os between the eye opener. For instance, data from eye opener **205***b* may be routed over to eye opener **205***a* and this data transmitted to the transmitter **225** in place of the data from data path **250**. In some combinations, these features allow the transceiver to perform self-test, or diagnostics of the data link, or diagnostics of the host system. These functionalities will be discussed in more detail below.

[0048] The transmit path includes a transmitter **225** coupled to a network and a transmitter eye opener **205***a*. The transmitter eye opener **205***a* recovers degraded clock and data values from an electrical signal that travels from the host **105** via serial path **250** (e.g., 10 G/s transmission line). As described above, the electrical signal will degrade along this path **250** and the eye opener **205***a* compensates for this degradation and sends the electrical signal to the transmitter

225. The transmitter **225** includes a transmitter optical sub-assembly ('TOSA') **245** that converts an electrical signal to an optical signal and transmits it onto a network. The transmitter **225** also preferably includes a laser driver **240** that controls a laser within the TOSA **245** and the modulation of data within the electrical signal onto the optical signal. The laser within the TOSA **245** is also biased to the proper operating current using a dedicated biasing and control circuit that may be contained within or outside of the laser driver. The transmitter **225** may include eye opener **205***a* depending on the particulars of the packaging and design chosen.

[**0049**] This transceiver module **200** allows serial connections **250**, **260** between the transceiver module **200** and the host **105**. In particular, the receiver and transmitter eye openers **205***a*, **205***b* compensate, on for signal degradation that occurs on these serial connections **250**, **260** at high data rates, such as a data rate of about 10 Gb/s or higher.

[**0050**] FIG. **3** is an example of an integrated circuit ('IC') for providing eye opening functionality to a receiver data path with a serial connection to a host. The eye opener IC **205***b* includes a CDR **925***b* and an RT **935***b*. An input of the CDR **925***b* receives a data path from an output of a buffer **945***d* and a reference clock signal from an output of a buffer **945***h*. A buffer **945***d*, receives the data path from the network through a receiver **215**. A buffer **945***h*, receives the reference clock signal from the host. The CDR **925***b* uses the reference clock as a starting point in recovering the data and clock signal from the data path. A clock multiplier unit may be used to adjust the rate of the reference clock as indicated by a rate select pin. The RT **935***b* is configured to retime and reshape the data path. A first input of RT **935***b* receives the data from a first output of the CDR **925***b* and a second input of the RT **935***b* receives the recovered clock signal from a second output of the CDR **925***b*.

[**0051**] The eye opener IC **205***b* provides a not ready signal to the host. One condition that activates the not ready signal is a result of a loss of signal ('LOS') signal. A first input of control logic **999***b* receives the LOS signal from an output of the buffer **945***b* when the buffer **945***b* does not detect incoming data. Another condition that activates the not ready signal as a result of a LOL signal. A second input of the control logic **999***b* receives the LOL signal from an output of CDR **925***b* when the CDR **925***b* is not able to lock onto the signal such as when the data rate is outside of the CDR **925***b*'s range. The control logic may, for example, be implemented as OR gate logic.

[**0052**] A MUX **955***b* provides bypass functionality to the data path. The output of buffer **945***b* is coupled to a first input of the MUX **955***b*. A second input of the MUX **955***b* is the retimed and reshaped data output of RT **935***b*. The control logic **999***b* sends a control signal to the selector input of the MUX **955***b* to select either the first or second input. The control logic **999***b* selects the buffered data from buffer **945***b* in response to receiving a LOL, an LOS, or bypass signal (e.g., from the host). In this embodiment, the control logic **999***b* selects the output RT **935***b* as a default condition.

[**0053**] A polarity control coupled to the input of the buffer **945***a* changes the polarity of its output signal, which is preferably composed of differential signaling. Also, the buffer **945***d* is preferably a coupled mode logic buffer and the buffer **945***h* is preferably a positive emitter coupled logic buffer.

[**0054**] FIG. **4** is an example of an IC for providing eye opening functionality to a transmitter data path with a serial connection to a host. The eye opener IC **205***a* includes a CDR **925***a* and an RT **935***a*, each operating as described with respect to FIG. **3** except that the data flow is received from the network through a transmitter **225** and sent to the host. An input of the CDR **925***a* receives a data path from an output of a buffer **945***a* and a reference clock signal from an output of a buffer **945***c*. It will be understood that other components of the IC eye opener **205***a* may also be included in the eye opener IC **205***a*.

[**0055**] The eye opener IC **205***a* includes control logic **999***a* to implement the not ready signal. A MUX **955***a* implements the bypass functionality.

[**0056**] A MUX **955***g* allows the retimer **935***a* to retime the data in synchronization with a Tx clock provided, in one example, by the host. A first input of the MUX **955***g* receives a ref clock signal for use by the RT **925***a* as a starting point in retiming the data. A second input of the MUX **955***g* receives a Tx clock signal, which is preferably a high-quality signal that may be used for retiming the data in place of the recovered clock signal. The Tx clock frequency may be adjusted by a clock multiplier unit as indicated by a rate select pin. The MUX **955***g* selects between the ref clock signal and the Tx clock signal according to a clock select signal. In one embodiment, the clock select signal is transmitted over a serial line along with other signals instead of through a dedicated pin.

[**0057**] FIG. **5** is an illustration of a transceiver module having dual eye openers integrated on a single chip according to an embodiment of the present invention. This integration allows a smaller aggregate board space to be used, in part, because the eye openers replace the relatively larger, more power hungry SERDES **110**, **120** on the transceiver module. In some embodiments, the SERDES **110**, **120** may be included on the host. Also, a higher density of transceivers can be placed in a line card. Furthermore, the packaging is simpler, and provided at a lower cost.

[**0058**] In addition, the receiver eye opener **205***b* and the transmitter eye opener **205***a* can share the single reference clock **320**. Accordingly, this integration reduces the number of inputs or pins on the chip itself, allows for easier testing of the chip, and reduces the number of components. Reference clock **320** is usually an input from the host board and is a clock at a sub-harmonic of the data rate. While it is possible to maintain the clock at exactly the data rate, this may not be desirable for signal integrity and EMI reasons. Generally the reference clock is $1/16$th or $1/64^{th}$ of the data rate. In some operating modes of the transceiver it would be possible to use the recovered clock from the receiver eye opener **205***b* as the reference clock of the transmitter eye opener **205***a*. Alternately, the reference clock input to eye opener **205***b* can be internally rerouted to act as the reference clock **320** for the receiver eye opener **205***b*. In either case, a reference clock **320** is still supplied by the host board.

[**0059**] In other embodiments, the receiver **115**, the transmitter **125**, or portions thereof (e.g. post-amplifier or laser driver) may be integrated onto the chip as described below.

[**0060**] FIG. **6** is an illustration of a transceiver module having a communications path integrated with dual eye openers according to an embodiment of the present inven-

tion. In particular, the chip may include an eye opener control module **350** that controls both the receiver eye opener **205***b* and the transmitter eye opener **205***a*. The eye opener control module **350** may be accessed and controlled by a user through a parallel connection, as shown, or a serial connection that is discussed below. Additionally, an eye opener communication module **340** may be integrated on the chip to facilitate intelligent communication between the receiver eye opener **205***b* and the transmitter eye opener **205***a*. For example, the eye opener communication module **340** may have direct connections to the receiver eye opener **205***b* and transmitter eye opener **205***a* enabling intelligent analysis and coordination between the two eye openers **205***a,b*. In another embodiment, the eye opener communication module **340** may have connections **360**, **365**, **370**, **375** that allow it to tap data in front of and behind the receiver and transmitter eye opener. The embodiment would allow the eye opener communication module **340** to monitor both eye openers **205***a,b* detect a failing eye opener, and perform diagnostic tests in which data flow is altered to test an individual eye opener or data link.

[**0061**] FIG. **7** is an illustration of a control module having a serial interface in a transceiver module having dual eye openers according to an embodiment of the present invention. According to this embodiment, the eye opener control module **350** comprises a polarity control **379**, a bypass control **377**, a baudrate control **381**, a clock polling control **383**, a loopback control **387**, a BERT control, and a serial interface **385**. A clock polling control **385** allows the eye opener control module **350** to poll the clocking frequency on the receiver eye opener **205***b* and the transmitter eye opener **205***a*. A polarity control **379** allows the eye opener control module **350** to selectably control the input/output data polarity on the receiver eye opener **205***b* and the transmitter eye opener **205***a*. A baudrate control **381** allows the eye opener control module **350** to adjust the baudrate response of the receiver eye opener **205***b* and the transmitter eye opener **205***a*.

[**0062**] A pass-through control **377** allows the eye opener control module **350** to activate/deactivate the receiver eye opener **205***b* and the transmitter eye opener **205***a* to allow data streams that are incompatible with a data rate range of a particular eye opener to pass through the transceiver module **200**. For example, if an eye opener is designed to retime a data stream of about 10 Gb/s, the bypass control **377** may automatically pass-through a 1 Gb/s data stream. Alternatively, the bypass control **377** may be manually controlled allowing a host **105** or network operator to determine whether to pass-through a particular data stream. A loopback control **387** allows the eye opener control module **350** to monitor the integrity of data paths and components on module **200**. The BERT control **389** allows the eye opener control module **350** to test bit error rates of data paths and components on module **200**. In other embodiments, additional controls to chip functions may be added to the eye opener control **350** such as an adaptive equalizer control.

[**0063**] In one embodiment, a serial interface **385** allows a serial connection **390** to communicate with the eye opener control module **350**. In general, a serial connection such as SPI, I2C, RS232, etc. may be used to control functions of the dual eye opener integrated circuit **300**. Other embodiments of serial connections are disclosed in U.S. patent application Ser. No. 10/266,870, "Optical Transceiver Module with Multipurpose Internal Serial Bus," by Lewis B. Aronson et al., filed Oct. 8, 2002, which is incorporated by reference herein. Accordingly, the number of pins required to command the eye opener control module **350** is reduced to a single pin. For example, this serial interface **385** replaces four pins in a four rate configuration or two pins in a binary rate configuration. In yet another embodiment, a second serial interface (not pictured) may provide output to the host such as current polarity setting, a LOL signal, current baudrate, a current clocking frequency, loopback test results, or BERT results. Alternatively, the serial connection may be a single serial interface capable of facilitating two-way communication between the eye opener control module **350** and the host.

[**0064**] FIG. **8** is an example of an IC for providing dual eye opening functionality to a transceiver data path with a serial connection to a host. The dual eye opener IC **300** includes an eye opener **205***a* that receives a data from the host and sends a data to a transmitter, and an eye opener **205***b* that receives a data from a receiver and sends a data to the host. Eye opener **205***a* includes a CDR **925***a* and an RT **935***a* to perform reshaping and retiming as implemented in FIG. **9**A. Eye opener **205***a* also has embodiments for providing a not ready signal to the host or bypass functionality to the data path. Moreover, the eye opener **205***b* performs reshaping and retiming the data with a CDR **925***b* and an RT **235***b*.

[**0065**] The not ready signal output to the host from an output of a control logic **999***b* is conditioned upon receiving a LOS signal from an output of buffer **945***d* or a LOL signal from an output of the CDR **925***b*. The MUX **955***d* provides bypass functionality. Bypass functionality is activated with a signal from the output of control logic **999***b* to a selector input of the MUX **955***d*. In another embodiment the Tx clock functionality may be implemented in the eye opener **205***a*.

[**0066**] FIG. **9** is an additional example of an IC for providing dual eye opening functionality to a transceiver data path with a serial connection to a host. A MUX **975***a* provides an improved IC that includes both bypass and loopback functionality, along with other functionalities described above. If the first selector input of the MUX **975***a* receives the loopback signal, then the MUX **975***a* output switches to sending data received from the MUX **975***b*. If a second selector input of the MUX **975***a* receives the bypass signal from host or the LOL signal from the output of the CDR **925***a*, then the MUX **975***a* switches to sending data received from the output of the buffer **945***a*. The MUX **975***a* may be configured to implement either the loopback or the bypass when both selector inputs of the MUX **975***a* receive a signal. The MUX **975***a* replaces MUXs **955***a*, **955***b*, and **955***c*, thereby reducing the component count, saving power, and causing less heat dissipation.

[**0067**] FIG. **10** illustrates a transceiver module comprising a DAC (digital to analog converter) on an integrated chip with dual eye openers. In this embodiment of dual eye opener IC **1020**, a DAC **1025** converts digital signals sent through or from the IC **1020** to analog signals to control receiver and/or transmitter components. Accordingly, control signals sent to a post-amplifier **1030**, a ROSA **1040**, a laser driver **1050**, and a TOSA **1060** can control characteristics such as analog swing, bias, and rise and fall times. In one embodiment, the digital signals sent to the DAC **1025** are generated by the control module **350** (see FIGS. **6**-**7**).

[0068] FIG. **11** illustrates a first DAC integrated into the receiver eye opener and a second DAC integrated into the transmitter eye opener. The DAC **1121** may control analog signal outputs of the receiver eye opener **1122** or analog signal inputs from a receiver. Likewise, the DAC **1123** may control analog signal outputs of the transmitter eye opener **1124** or analog inputs from the transmitter as described with respect to FIG. **10**.

[0069] FIGS. **12**A-D illustrate loopback modes integrated with dual integrated eye openers. A loopback mode allows an integrity check on a particular data path. Accordingly, a first loopback mode may allow an integrity check of one or more components along the particular data path on the module **200** or on an optical path on a network. A second loopback mode may allow an integrity check of a data path containing multiple components on the module **200**. Thus, multi-mode loopbacks allow monitoring of data path integrity at different levels on the transceiver module **200**. The transceiver module **200** includes a eye opener loopback control **400** within a eye opener control **350** used to control the loopback functionality on the module **200**.

[0070] FIG. **12**A illustrates a first loopback mode from the input **407** of the transmitter eye opener **205***a* to the output **409** of the receiver eye opener **205***b*. This first loopback **405** allows the host system **105** to check the function of the host board and check that the transceiver module **200** is correctly plugged into its connector and is powered up properly. Because this first loopback **405** is integrated within the module **200**, an installer can quickly determine whether the transceiver module **200** is properly installed or whether a failure occurred within the transceiver module **200** or host **105**.

[0071] FIG. **12**B is an illustration of a transceiver module having a second loopback mode integrated with dual eye openers according to an embodiment of the present invention. This second loopback **410** allows the host system **105** to check that the receiver eye opener **205***b* is operating properly and that the transceiver module **200** is properly plugged into its connector and powered up properly. Because the second loopback **410** is integrated within the transceiver module **200**, a manufacturer can quickly test the integrity of the receiver eye opener **205***b* prior to shipment as well as allowing a network administrator to easily check the receiver eye opener **205***b* after installation of the transceiver module **200**.

[0072] FIG. **12**C is an illustration of a transceiver having a third loopback mode integrated with dual eye openers according to an embodiment of the present invention. This third loopback **420** allows the host system **105** to check that the transmitter eye opener **205***a* is operating properly and that the transceiver module **200** is properly plugged into its connector and powered up properly. Because the third loopback **420** is integrated within the transceiver module **200**, a manufacturer can quickly test the integrity of the transmitter eye opener **205***a* prior to shipment as well as allowing a network administrator to easily check the transmitter eye opener **205***a* after installation of the transceiver module **200**.

[0073] FIG. **12**D is an illustration of a transceiver module having a fourth and fifth loopback mode integrated with dual eye openers according to an embodiment of the present invention. The fourth loopback **425** is from the output **409** of the receiver eye opener **205***b* to the input **407** of the transmitter eye opener **205***a*. This fourth loopback **425** allows for testing of the transceiver module **200** and an optical data path on a network. Thus, a network administrator or module manufacturer can quickly test the entire transceiver module **200** and test whether the module **200** is properly coupled onto fiber. The fifth loopback **430** is from the output **409** of the receiver eye opener **205***b* to the output **417** of the transmitter eye opener **205***a*. This fifth loopback **430** allows for testing of the front end components on the transceiver module **200**, the receiver eye opener **205***b*, and an optical data path on a network. A sixth loopback (not pictured, but see FIG. **10**B and FIG. **10**D for IC implementation) is from the output **417** of the transmitter eye opener **205***a* to the input **412** of the receiver eye opener **205***b*.

[0074] The above-described loopback modes are examples of loopbacks that may be integrated in the transceiver module **200** and is not meant to include all possible loopback modes. For example, loopbacks may be integrated from the input **412** of the receiver eye opener **205***b* to both the input **407** and the output **417** of the transmitter eye opener **205***a*. These loopbacks would allow testing of the front end components and an optical path as well a combination of front end components, the receiver eye opener **205***a* and an optical path. Additional loopbacks may also be integrated within the transceiver module **200** to test other data paths and/or components.

[0075] Referring to the example of FIG. **8**, MUXs **955***b*, **955***c*, **955***f*, and **955***g* provide loopback functionality for testing components as described above. In eye opener **205***a*, MUXs **955***b* and **955***c* receive a first loopback signal from the host to each selector input. When the first loopback signal is high, the output of the MUX **955***c* switches from sending data received from the output of the CDR **925***a* to the input of the RT **925***a* to sending data received from the output of the CDR **925***b* to the input of the RT **925***a*. At the same time, the output of the MUX **955***b* switches from sending the recovered clock signal received from the output of the CDR **925***a* to the input of RT **935***a* to sending the recovered clock signal received from the output of the CDR **925***b* to the input of RT **935***b*.

[0076] In eye opener **205***b*, MUXs **955***e* and **955***f* receive a second loopback signal from the host to each selector input. When the second loopback signal is high, the output of MUX **955***f* sends data received from the CDR **925***a* to the input of RT **935***b* rather than data from CDR **925***b*, and a recovered clock signal received from the CDR **925***a* to the input of RT **935***b* rather than from the CDR **925***a*.

[0077] FIG. **13**A is an embodiment of the third loopback mode of a dual eye opener IC such as in FIG. **12**B. For the purposes of illustration, some components that are transparent to the data path during normal operation are omitted. The dual eye opener IC **300** includes eye opener **205***a* and eye opener **205***b*. In loopback mode, an input of a buffer **945***a* receives the data path from the host into eye opener **205***a*, and an input of a CDR **925***a* receives the data path from an output of the buffer **945***a*. In eye opener **205***b*, an input of an RT **935***b* receives the data path from an output of the CDR **925***a*, an input of a buffer **945***e* receive the data path from an output of the RT **935***b* and transmits the data path to back to the host.

[0078] In an alternative embodiment of the third loopback mode, the buffer **945***a* may be isolated by coupling the

output of the buffer **945***a* to the output of the buffer **945***e* as in the first loopback mode. It will be understood that each of the other loopback modes may be similarly implemented. The second loopback mode may be implemented by coupling the input of the first CDR **925***a* or the input of the first buffer **945***a* to the output of the second CDR **925***b* or the input of the buffer **945***a*. The fourth loopback mode may be implemented by coupling the output of the second CDR **925***b* to the input of the first CDR **925***b*. The fifth loopback mode may be implemented by coupling the output of the second CDR **925***b* to the output of the first CDR **925***a*. The above-described loopback implementations are examples that are not meant to include all possible implementations.

[**0079**] FIG. **13**B is an embodiment of the sixth loopback mode of a dual eye opener IC such as in FIG. **12**B. An input of the receiver **215** receives the data path from the network. In the eye opener **205***b*, an input of a buffer **945***d* receives the data path from an output of a receiver **215**, and an input of a CDR **925***b* receives the data path from an output of the buffer **945***d*. In the eye opener **205***a*, an input of a RT **935***a* receives the data path from an output of the CDR **925***b*, and an input of a buffer **945***b* receives the input from an output of the RT **935***a*. An input of a transmitter **225** receives the data path from an output of the buffer **945***b* and transmits the data path to the network. Other embodiments of the sixth loopback mode may be implemented where the data path is output from the eye opener **205***b* from a different component, such as the buffer **945***d*, and the data path is received in the eye opener **205***a* in a different component such as the buffer **945***b*.

[**0080**] FIG. **13**C is an embodiment of the third loopback mode data path of a dual eye opener such as in FIG. **12**C. In the eye opener **205***a*, an input of a buffer **945***a* receives the data path from the host, an input of a CDR **925***a* receives the data path from an output of the buffer **945***a*, and an input of RT **935***a* receives the data path from an output of the CDR **935***a*. In the eye opener **205***a*, an input of a buffer **945***e* receives the input from an output of the RT **935***a* and transmits the data path back to the host.

[**0081**] FIG. **13**D is an embodiment of the sixth loopback mode data path of a dual eye opener such as in FIG. **12**C. An input of a receiver **215** receives the data path from the network. In an eye opener **205***b*, an input of a buffer **945***d* receives the data path from an output of the receiver **215**, an input of a CDR **925***b* receives the data path from an output of the buffer **945***d*, and an input of RT **935***b* receives the data path from an output of the CDR **935***b*. In an eye opener **205***a*, an input of a buffer **945***b* receives the input from an output of the RT **935***b*. An input of a transmitter **225** receives the data path from an output of the buffer **945***b* and transmits the data path to the network.

[**0082**] FIG. **14** is an illustration of a transceiver module with bypass functionality integrated with a transmitter and a receiver each having multiple CDR components according to an embodiment of the present invention. A conventional eye opener operates properly on signals within a small range of data rates. Typically, an eye opener will lock onto an incoming data stream only at a certain data rate or within a narrow data rate range. Additionally, some eye openers may be able to lock onto data at sub-harmonics of an operable data rate. However, at other data rates where the eye opener is unable to lock onto the data, the output on the eye opener is typically squelched. This limitation of conventional eye openers reduces the flexibility of a transceiver module to operate in different network environments. In particular, conventional eye openers preclude a protocol agnostic transceiver module, with eye opener functionality on chip, that may operate in accordance with different types of protocols and data rates.

[**0083**] The bypass functionality of the present invention allows an eye opener to automatically pass data through if it is unable to lock onto the data because it is not in a particular data rate band. In particular, the eye opener may be designed to pass-through a data stream having a data rate such that clock and data recovery is not required to remain within an acceptable jitter budget. For example, this pass-through functionality would allow a 10 Gb/s Ethernet transceiver to operate in particular Fibre Channel environments where a eye opener is not required. Additionally, the functionality allows debugging or engineering of a link to occur without the presence of the non-linear regeneration feature of the eye opener. The pass-through functionality of the eye opener may be automatically controlled depending on whether the eye opener is locked to the data. The eye opener may generate a LOL signal which is a signal of general use, but which can also be used for this purpose. The pass-through functionality may also be externally controlled by a control signal or by a digital signal on a digital interface. It is recognized that the bypass feature is valuable as a diagnostic and development tool even for data rates that are within the locking range of the eye opener.

[**0084**] One embodiment of a transceiver module **200** having pass-through functionality, shown in FIG. **14**, includes a receiver eye opener **205***b*, an eye opener **205***a*, and pass-through control **510** in the eye opener control module **350**. Data received from the receiver is stored within a fourth buffer **945***d* in the receiver eye opener **205***b* without resetting a jitter budget within the data path. The fourth buffer **945***d* is coupled to a bypass line **532** and a first CDR **534**. The pass-through control **510** toggles the output on the fourth buffer **945***d* between the pass-through line **532** and the first CDR **925***a* depending on whether the second CDR **925***b* can lock onto the data. The bypass control **510** may be designed to automatically toggle between the outputs on the fourth buffer **945***d* or be manually controlled by an operator via a control interface (e.g., serial interface **385**). For example, a fourth CDR **925***d* may also be coupled to the fourth buffer **945***d* to operate on a different data stream than data operated on by the second CDR **925***b*. Also, this fourth CDR **925***d* would allow toggling by the pass-through control **510** between three different data paths. It will be understood that multiple eye openers may operate within the receiver eye opener **205***b* to facilitate different data streams being provided eye opener functionality on the eye opener **205***b*. Additionally, rate detection may be integrated along a receive path or transmit path to enable intelligent detection of data rates received from both a host and a network. According to one example, an adjustable wideband oscillator and logic circuitry may be used to identify a rate on a particular signal. In another example, multiple narrowband oscillators, a discriminator, and logic circuitry may also be used to identify the rate of a signal. This rate detection facilitates the use of multiple eye openers along a data path resulting in eye opener functionality on a single data path being available to signals having different data rates.

[0085] A similar bypass operation may be provided on the transmitter eye opener **205***a*. In particular, a first buffer **945***a* is coupled to a first CDR **925***a* and a pass-through line **526**. The pass-through control **510** toggles data between the first CDR **925***a* and the pass-through line **526** depending on the characteristics of the data. Additionally, multiple eye openers (e.g., a third CDR **925***c*) may operate within the transmitter eye opener **205***a* to facilitate different data streams being provided eye opener functionality on the eye opener **205***b*.

[0086] FIG. **15** is a flowchart illustrating a first method bypass method operable in a transceiver module with an integrated transmitter and receiver, each having multiple CDRs. A data rate of a data stream entering a eye opener is detected **540**. In response to the detected data rate being outside a predefined range of operation of an eye opener, the data stream is passed through the transceiver module without eye opening **542**. This bypass functionality may be automated on the CDR 1-IC or manually controlled by a user. In response to the detected data rate being within the predefined range of operation of an eye opener, eye opening is performed on the data stream to reduce jitter **545**.

[0087] FIG. **16** is a flow chart of a second bypass method operable in a transceiver module with a transmitter and a receiver each having multiple CDR components according to an embodiment of the present invention. A control signal is detected **550** by a buffer storing a data stream. In response to the control signal being in a first state (e.g., high), the data stream will be passed through a transceiver module without eye opening **552**. In response to the control signal being in a second state (e.g., low), a eye opening is performed on the data stream **555**.

[0088] FIG. **17** is an embodiment of the bypass functionality of a dual eye opener IC such as in FIGS. **8** or **9**. The dual eye opener IC **300** includes an eye opener **205***a* and an eye opener **205***b*. Because the CDR and RT modules do not operate on the data path, a data from the host received into an input of the buffer **945***a* is sent directly from an output of the buffer **945***a* to an input of the buffer **945***b*. An output of the buffer **945***b* sends data path to an input of a transmitter **225** for transmission to the network. Likewise, data received from the network into an input of a receiver **215** and sent to from an output of the receiver **215** to an input of the buffer **945***d* is sent directly from an output of the buffer **945***d* to an input of the buffer **945***e*. An output of the buffer **945***e* sends the data to the host. A signal may be included for manual override of the bypass mode. The control signals necessary to activate bypass functionality are discussed above.

[0089] In one embodiment, adaptive equalization is performed on signal by the host board during bypass mode for noise reduction and/or signal processing. The not ready signal may be polled to determine whether the eye opener is currently operating in bypass mode, initiating the adaptive equalization functionality when the not ready signal is high. The adaptive equalization feature advantageously compensates for link dispersion as a substitute for retiming and reshaping ordinarily provided by the eye opener.

[0090] FIG. **18** is an illustration of a transceiver module having a BERT engine integrated with dual eye openers according to an embodiment of the present invention. According to one embodiment of the invention, a BERT engine **630** is integrated in a chip **600** having the transmitter eye opener **205***a* and the receiver eye opener **205***b*. The BERT engine **630** comprises a pattern generator **640**, an error detector **635**, and a BERT loopback control **650**. In another embodiment, the BERT engine **630** is integrated within the eye opener control module **350**.

[0091] The BERT engine eye opener uses test points integrated within the data paths to inject and receive bit sequences that are used to test the bit error rate associated with particular paths. In this example, four test points are integrated on the transceiver module **200** and are identified as points A **605**, B **610**, C **615**, and D **620**. These test points **606**, **610**, **615**, **620** allow the BERT engine **630** to inject and retrieve bit sequences on a data path. Using these test points, the BERT engine **630** may determine a bit error rate on external optical paths on an attached network, internal electrical paths or a combination of both electrical and optical paths.

[0092] The BERT engine **630** is useful both as a diagnostic function for end-customers in their systems, but is also useful as part of the module manufacturing process. For example, a manufacturer may perform integrity tests on the transceiver module **200** to ensure that the module passes a quality test. The BERT engine **630** may test internal paths on the module **200** during various operating conditions such as operating within a temperature chamber under temperature cycle or voltage margining. This feature provides a more efficient method of testing the module **200** when compared to more traditional external BERTs. Additionally, both the loopback modes and BERT engine **630** may operate in transponder modules as well.

[0093] FIG. **19** is a flow chart of a BERT testing method operable in a transceiver module having dual integrated eye openers. A bit sequence or test pattern is inserted **670** at a particular test point on the transceiver module **200**. The bit sequence is output by the pattern generator **640**. The pattern generator may use psuedo-random numbers and/or characters in the output or a pattern stored in a memory. The bit sequence travels along a path and is retrieved at another test point. Errors within the bit sequence are detected **675** and evaluated by the error detector **635**. This error rate testing and evaluation may occur under various environmental conditions **680** allowing the BERT engine **630** to test the module **600** at different environmental conditions **685** and retest the bit error rate of the path under a new condition. BERT engine **630** results may be sent to the host for evaluation.

[0094] FIG. **21**A illustrates a first embodiment of an eye opener having an equalizer. The data path of eye opener **2100** comprises an equalizer **2120**, which receives data from a buffer **2105***a* and outputs data to a buffer **2105***b*. The buffer **2105***a* receives data from a receiver and the buffer **2105***b* sends data to a host. In another embodiment, the buffer **2105***a* receives data from the host and the buffer **2105***b* sends data to a transmitter. In one embodiment the eye opener **2100** conditions a signal in bypass mode.

[0095] The equalizer **2120** resets the data path's jitter budget by reshaping and retiming the data to remove channel noise from sources such as inter-symbol interference. The equalizer **2120** is coupled to receive signals representing coefficients from a coefficient module **2110** and a clock signal from a CDR **2130**. The equalizer **2120** is preferably an adaptive equalizer that adapts to channel conditions such

as changing temperature, but in other embodiments, the equalizer **2120** may be a passive equalizer. Other embodiments of equalizers are disclosed in U.S. patent application Ser. No. 10/288,324, "System and Method for Reducing Interference in an Optical Data Stream," by Thomas J. Lenosky et al., filed on Nov. 5, 2002; U.S. Patent Application No. 60/423,970, "System and Method for Reducing Interference in an Optical Data Stream Using Multiple Selectable Equalizers," by Thomas J. Lenosky et al. filed on Nov. 5, 2002; and U.S. patent application No. __/___,___, "Method And Apparatus For Reducing Interference in an Optical Data Stream Using Data-Independent Equalization," by Thomas J. Lenosky et al., filed on Apr. 17, 2003; all of which are herein incorporated by reference. The equalizer **2120** may comprise a feed forward filter having a finite impulse response, a DFE ('Decision Feedback Equalizer'), or the like, either alone or in combination. The output of the equalizer **2120** may be analog or digital, depending on the implementation. Further embodiments of the equalizer **2120** are discussed below.

[**0096**] The coefficient module **2110** provides coefficients to the equalizer **2120** by evaluating channel effects on the data. The coefficient module **2110** is coupled to receive the data from the buffer **2105***a* and send the coefficient signal to the equalizer **2120**. The coefficient module **2110** may be implemented in hardware, software, or firmware. Further embodiments of the coefficient module **2110** are discussed below.

[**0097**] The CDR **2130** provides a clock to the equalizer **2120** by extracting a recovered clock signal from the data stream. The CDR **2130** is coupled to receive the data from the buffer **2105***a* and to send a clock signal to the equalizer **2120**. One of ordinary skill in the art will recognize that the CDR **2130** may receive the data to recover the clock signal from other points in the data path such as at the equalizer **2120** output. Furthermore, the CDR **2130** may comprise the variations discussed herein.

[**0098**] FIG. **21**B illustrates a second embodiment of an eye opener having an equalizer. In this embodiment, the data path of eye opener **2180** comprises an equalizer **2150** in series with a CDR **2160** coupled with an RT **2170**. The equalizer **2150** receives data from the buffer **2155***a* and the RT **2170** outputs data to the buffer **2155**b. The CDR **2160** and equalizer **2150** may be disposed on separate chips or an integrated circuit. One advantage of this embodiment, is that the signal is conditioned by both the equalizer **2150** and CDR **2160**, leading to a lower bit error rate.

[**0099**] In contrast to the embodiment of FIG. **21**A, the equalizer **2150** preferably reshapes and outputs an analog signal by removing channel effects. The equalizer **2150** receives a clock signal from the CDR **2160** to clock the equalizer's digital components.

[**0100**] The CDR **2160** and RT **2170** retime and reshape the equalized data. The RT **2170** receives a clock signal recovered by the CDR **2160**. The CDR **2160** and RT **2170** may comprise the variations discussed herein.

[**0101**] In another embodiment, the equalizer **2150** is disposed on a first chip and the CDR **2160** and RT **2170** are disposed on a second chip. The first chip may also comprise a CDR to clock the digital portions of the equalizer **2150** without relying on the CDR **2160** of the second chip. Advantageously, by not traveling off-chip, the high-speed clock signal may remain low-powered and experience less degradation..

[**0102**] FIG. **22** illustrates an equalizer according to an embodiment of the present invention. A data path of the equalizer **2200** comprises a feed forward filter and a feedback path comprises a DFE. The feed forward filter, receiving analog data from an input buffer, includes a plurality of delay lines **2210***a-c,* a plurality of multipliers **2230***a-c,* a summer **2250**, and a slicer **2260**. The delay lines **2210***a-c* receive the data from the input buffer and the slicer **2260** sends the data to the output buffer. The feed back path, receiving digital data from the summer **2250**, includes the slicer **2260**, a plurality of delay lines **2220***a,b,* and a plurality of multipliers **2240***a,b.*

[**0103**] The delay lines **2210***a-c,* **2220***a,b* delay the data stream so that data bits are input at individual integrators at different clock cycles. The delay lines **2210***a-c,* **2220***a,b* are coupled to receive an analog signal carrying either analog or digital data and send the data to the multipliers **2230***a-c,* **2240***a,b.* The delay lines **2210***a-c,* **2220***a,b* may be implemented in various ways such as through analog transmission lines comprising combinations of inductors and capacitors. Preferably, the delay is a one-bit period.

[**0104**] The multipliers **2230***a-c,* **2240***a,b* generate a product of the data and coefficients. The multipliers **2230***a-c,* **2240***a,b* are coupled to receive the data signals and the coefficient signals and send to send a signal to the summer **2250**. The summer **2250** generates a sum of the feed forward filter and the DFE. The summer **2250** is coupled to receive signals from the feed forward multipliers **2230***a-c* and from the DFE multipliers **2240***a,b.* The slicer **2260** receives the analog signal from the summer **2250** and a clock signal, and generates a digital output according to the clock signal.

[**0105**] In one embodiment, the equalizer **2200** outputs a digital signal from the slicer **2260** output such as in the embodiment of FIG. **21**A in which the equalized signal may receive no further conditioning before a data symbol decisions are made. In another embodiment, the equalizer **2200** outputs an analog signal from the summer **2250** output such as in the embodiment of FIG. **21**B in which the equalized signal is input into a CDR.

[**0106**] FIG. **23** illustrates a coefficient module according to an embodiment of the present invention. A data path of the coefficient module **2800** comprises a bank of correlation modules **2810***a-c,* an ADC logic **2820**, a microcontroller **2830**, and a DAC logic **2840**. The bank of correlation modules **2810***a-c* receives data from an input buffer and the DAC logic **2840** outputs a coefficient signal to an equalizer or an output buffer.

[**0107**] The bank of correlation **2810***a-c* modules performs autocorrelation functions on the data stream. The bank of correlation modules **2810***a-c* receive data signals from the input buffer and send signals to the ADC logic **2820**. In FIG. **28**, the bank of correlation modules **2810***a-c* calculates $<s(t)s(t+\delta)>$, $<s^2(t)s(t+\delta)>$, and $<s(t)s^2(t+\delta)>$ for $\delta=1, 2, 3$, etc.

[**0108**] The ADC logic **2820** digitizes analog signals from the bank of correlation modules **2810***a-c* and sends digital signals to the microcontroller **2830**. The ADC logic **2820** comprises a multiplexor to multiplex multiple inputs on a

single output. The microcontroller **2830** uses algorithms to determine coefficient values according to the autocorrelation results. The microcontroller **2830** comprises a memory element such as a EEPROM for storing instructions and past coefficient values. The DAC logic **2840** generates an analog signal from the digitized output of the microcontroller **2830**.

[**0109**] FIG. **24** illustrates a correlation module according to an embodiment of the present invention. The correlation module **2900** comprises a plurality of delay lines **2910***a-d,* a plurality of multipliers **2920***a-c,* and a plurality of integrators **2930***a-c.* The multipliers **2920***a-c* are preferably analog multipliers such as Gilbert cells and the integrators **2930***a-c* are preferably analog integrators. An advantage of the present invention is that analog circuitry determines correlations from the high-speed data input so that an output to ADC logic can be low-powered. Moreover, the correlation module **2900** generates coefficients without necessitating a training sequence.

[**0110**] The correlation module **2900** is configured to calculate an autocorrelation function of the signal at different times, i.e., $<s(t)s(t+\delta)>$. A first data path includes a multiplier **2920***a* that receives inputs directly from the data stream and after a delay line **2910***a* and sends an output signal to an integrator **2930***a.* A second data path includes a multiplier **2920***b* that receives inputs directly from the data stream and after two delay lines **2910***a,b* and sends an output signal to an integrator **2930***b.* A third data path includes a multiplier **2920***c* that receives inputs directly from the data stream and after three delay lines **2910***a-c* and sends an output signal to an integrator **2930***c.* The number and types of data paths may vary according to specific implementations within the scope of the present invention. The products are sent to a microcontroller.

[**0111**] FIGS. **25-27** illustrate examples of component integration that may be implemented as part of the integrated circuit, or within a transceiver module. FIG. **25** is an illustration of a transceiver module having amplification and laser components integrated with dual eye openers according to an embodiment of the present invention. This integration reduces the size of these components on the transceiver module **200** and allows for more efficient connections between the various components. The integration of additional circuits into the eye opener may also be desirable depending on the environment in which the eye opener will operate as well as obvious benefits such as reduced pin count, reduced package size and cost, reduced power consumption, improved signal integrity, etc. Also, additional control circuitry may be integrated within the eye opener. For instance, laser bias control circuitry, signal detect circuitry, and other circuits which might otherwise be incorporated into the postamp or laser driver separately.

[**0112**] FIGS. **26** and **27** illustrate other examples of component integration on a transceiver module. Specifically, the post amplifier **230** may be individually integrated with the dual eye openers **205***a,b* and the eye opener control module **350**. Comparatively, the laser driver **240** may be individually integrated with the dual eye openers **205***a,* **205***b* and the eye opener control module **350**. One skilled in the art that there are numerous additional implementations of component integration on a chip substrate in accordance with the present invention.

[**0113**] The combinations of dual eye openers integrated with post amp and laser driver either singly or in combination may also be accomplished in the case of single eye openers **205***a,b.* Eye opener **205***b* can be integrated with the postamp or may have sufficient input sensitivity to eliminate the requirement for a post amp. The eye opener **205***b* may also have signal detect features or other functions that may be incorporated into a post amp or used in a receiver. Likewise, the eye opener **205***a* may be integrated with the laser driver and with any other circuitry that is used in a transmitter, for example laser bias control circuitry. Eye opener **205***a* may have provisions for adjustable output swing, adjustable edge speed of the output, and other features that may be incorporated into laser drivers.

[**0114**] FIG. **28** is an illustration of a transceiver module having power management functionality integrated with dual eye openers according to an embodiment of the present invention. Control of power consumption may become significant, depending on the actual design, if multiple eye openers are implemented within the module **200**. Accordingly, it is desirable to minimize the power consumption of components on the eye opener integrated circuit **800**. Power down modes integrated in the eye opener integrated circuit **800** allow the eye opener control module **350** to power down components that are not being utilized during a particular time period. The power down modes may be externally controlled via control lines or digital interfaces, or they may be used automatically as part of the normal operation of the integrated circuit. For example, a signal detect function that may be active with a low duty cycle (e.g., 10%) so that the circuit, which would otherwise consume a substantial amount of current, will instead only consume 10% of the amount in the absence of automatic power down. The power down may occur on the scale of microseconds so that the circuit is turned on every few hundred microseconds, for example, and is powered down the rest of the time. Other signals within the eye opener might also be designed to utilize this type of power down. In addition, other circuits in the eye opener may be powered down when the eye opener is used in a transceiver module and these signals may be specific to use of the eye opener within a transceiver or transponder module. The power down modes may also include a shutdown mode that turns off the eye opener in response to the absence of a signal for a particular period of time.

[**0115**] In one embodiment, a component may operate on a duty cycle. For example, the circuitry necessary for the LOS may be powered up in response to a polling of the CDR. If the LOS condition exists, then the LOS signal is output. However, if the LOS condition does not exist, then a power savings is realized since the LOS will not be powered up again until the next polling.

[**0116**] A power management module **805** within the eye opener control module **350** dynamically controls power levels on various components on the eye opener integrated circuit **800**. For example, the power management module **805** may shut down the BERT engine **630** or pass-through control **510** if they are not being used. Additionally, the power management module **805** may decrease power to a eye opener (e.g., the receiver eye opener **205***b* or transmitter eye opener **205***a*) if it is not operating and may restore power to the eye opener when needed.

[**0117**] In one embodiment, a host startup protocol module **810** within the eye opener control module **350** dynamically

controls power levels on components during installation. For example, the host startup protocol module **810** may facilitate an initial handshaking procedure between the transceiver module **200** and the host **105**. During installation, the transceiver module **200** may transmit a low power level inquiry to the host to request a start-up procedure. In response, the host **105** replies to the inquiry and the host startup protocol module **810** then powers up components on the transceiver module **200** needed to complete the setup procedure. Additionally the host **105** may communicate data describing whether its protocol operation of the dual eye openers.

[**0118**] The power management module **805** and host startup protocol module **810** allow components on the transceiver module **200** to operate in a sleep mode when not in use. As a result, power management efficiency is increased and heat on the chip is reduced.

[**0119**] FIG. **29** is a flow chart of a method for managing power of components on a transceiver module according to an embodiment of the present invention. In particular, a mode of operation is determined **850** such as a mode not requiring a BERT engine. In response, components not required for this mode may be powered down **860** such as a BERT engine for the mode of operation in the example above.

[**0120**] The present invention provides several benefits over conventional transceiver modules. A first benefit is that is may be used to improve the performance of XFP transceiver modules. XFP transceiver modules are small form factor optical modules operating at a data rate of approximately 10 Gb/s.

[**0121**] Another benefit of the present invention is that the transceiver module may be plugged into serial connectors on a host reducing the number of SERDES components on both the host and transceiver module. Dual eye openers may be placed in the transmit and receive paths to ensure that data streams remain within a predefined jitter budget. The removal of SERDES components decreases the amount of heat on the transceiver chip(s), decreases the component cost, and reduces the required area on a chip substrate for components.

[**0122**] An additional benefit of the present invention is that particular functionalities may be integrated on the transceiver module. A first functionality is providing control of various components, including dual eye openers, via a serial connection. This serial connection reduces the number of pins and connections required to control the transceiver module. A second functionality is providing multiple loopback modes that may be used to test components and data paths on both the transceiver module and optical paths on an attached network. Furthermore, a BERT engine may be integrated on the module to further enhance-this testing and monitoring capability of the loopback modes. These functionalities lower the manufacturing costs and installation costs because the internal testing described above provides more efficient and cost effective methods of testing than conventional testing procedures.

[**0123**] Still yet another benefit of the present invention is that a pass-through functionality may be integrated on the transceiver module. This pass-through function allows the transceiver module to operate in different networking environments having different data rates and eye opener requirements.

[**0124**] The present invention may also include power management functionality that is integrated on the transceiver module. This power management function allows the dynamic control of power to components on the module during both operation and installation. As a result, power is conserved and heat reduced on the chips.

[**0125**] While the present invention has been described in detail in regards to a transceiver, it will be understood from the above description that embodiments of the present invention may be applied to a transponder as well.

[**0126**] While the present invention has been described with reference to certain preferred embodiments, those skilled in the art will recognize that various modifications may be provided. For example, other types of circuits may be used to reduce jitter or open an eye diagram at a transceiver or transponder module. For example, both passive and adaptive equalization circuits may be used for these purposes. Also, one skilled in the art will recognize that the above description may apply to reclocking circuitry as well. Accordingly, the functionalities described above are not meant to be limited to an eye opener, but may be used in a number of circuits used to improve a signal such as signal conditioners or eye openers. Variations upon and modifications to the preferred embodiments are provided for by the present invention, which is limited only by the following claims.

1. An optical transceiver module, comprising:

a serial electrical interface with an electrical output port and an electrical input port;

a receive path comprising:

an optical input port for receiving a first optical signal from external to the transceiver module;

a receiver eye opener for retiming and reshaping a first serial electrical data stream based on the first optical signal; and

the electrical output port of the serial electrical interface for transmitting the retimed and reshaped first serial electrical data stream to external to the transceiver module; and

a transmit path comprising:

an electrical input port of the serial electrical interface for receiving; a second serial electrical data stream from external to the transceiver module;

a transmitter eye opener for retiming and reshaping the second seria electrical data stream; and

an optical output port for transmitting a second optical signal to external to the transceiver module, the second optical signal based on the retimed and reshaped second serial electrical data stream.

2. The transceiver module of claim 1, wherein the receiver eye opener comprises a port coupled to receive a reference clock for use in retiming and reshaping the first serial electrical data stream.

3. The transceiver module of claim 2, wherein the receiver eye opener further comprises a phase locked loop for aligning a phase of the first electrical data stream with the reference clock.

4. The transceiver module of claim 2, wherein the transmitter eye opener comprises a port coupled to receive the reference clock that is received by the receiver eye opener.

5. The transceiver module of claim 1, further comprising:

a receiver communicatively coupled to the receiver eye opener for converting the first optical signal to the first serial electrical data stream, and

a transmitter communicatively coupled to the transmitter eye opener for converting the retimed and reshaped second serial electrical data stream to the second optical signal.

6. An optical transceiver module, comprising:

a serial electrical interface with an electrical output port and an electrical input port;

a receive path comprising:

an optical input port for receiving a first optical signal from external to the transceiver module;

a receiver eye opener for retiming and reshaping a first serial electrical data stream based on the first optical signal; and

the electrical output port of the serial electrical interface for transmitting the retimed and reshaped first serial electrical data stream to external to the transceiver module; and

a transmit path comprising:

an electrical input port of the serial electrical interface for receiving a second serial electrical data stream from external to the transceiver module;

a transmitter eye opener for retiming and reshaping the second serial electrical data stream; and

an optical output port for transmitting a second optical signal to external to the transceiver module, the second optical signal based on the retimed and reshaped second serial electrical data stream, wherein the electrical output port switchably outputs a signal selected from a group comprising the first serial electrical data stream without retiming and reshaping, the retimed and reshaped first serial electrical data stream, and a diagnostic data stream.

7. The transceiver module of claim 1, wherein the first serial electrical data stream has a data rate of approximately 10 Gb/s or faster.

8. The transceiver module of claim 1, wherein the transceiver module comprises an XFP (10-Gigabit Small Form Factor)—compliant transceiver module.

9. The transceiver module of claim 1, wherein the retimed and reshaped first serial electrical data stream comprises an XFI (**10** Gb/s serial electrical interface)—compliant electrical data stream.

10. The transceiver module of claim 1, wherein the electrical output port transmits the retimed and reshaped first serial electrical data stream to a host, and the electrical input port receives the second serial electrical data stream from the host.

11. The transceiver module of claim 1, wherein the receiver eye opener comprises a first CDR (Clock and Data Recovery), and the transmitter eye opener comprises a second CDR.

12. The transceiver module of claim 11, wherein each CDR further comprises a retimer to retime the serial electrical data stream in response to a clock signal.

13. The transceiver module of claim 12, wherein the clock signal is switchably selectable between a reference clock received by the eye opener and a clock recovered from the electrical serial data stream.

14. In an optical transceiver module having a serial electrical interface with an electrical output port and an electrical input port, a method for receiving and transmitting signals, the method comprising the steps of:

receiving a first optical signal from external to the transceiver module;

converting the first optical signal to a first serial electrical data stream;

retiming and reshaping the first serial electrical data stream;

transmitting the retimed and reshaped first serial electrical data stream to external to the transceiver module;

receiving a second serial electrical data stream from external to the transceiver module;

retiming and reshaping the second serial electrical data stream;

converting the retimed and reshaped second serial electrical data stream to a second optical signal; and

transmitting the second optical signal to external to the transceiver module.

15. The method of claim 14, further comprising:

receiving a reference clock, wherein the reference clock is used to reshape and retime the first serial electrical data stream and also to reshape and retime the second serial electrical data stream.

16. The method of claim 14 further comprising:

switchably transmitting a signal selected from a group comprising the first serial electrical data stream without retiming and reshaping, the retimed and reshaped first serial electrical data stream, and a diagnostic data stream.

17. The method of claim 14, wherein each step of retiming and reshaping a serial electrical data stream comprises:

recovering a clock and data from the serial electrical data stream; and

retiming the recovered data based on a clock signal.

18. In an optical transceiving module having a serial electrical interface with an electrical output port and an electrical input port, a method for receiving and transmitting signals, the method comprising the steps of:

receiving a first optical signal from external to the transceiver module;

converting the first optical signal to a first serial electrical data stream;

retiming and reshaping the first serial electrical data stream;

transmitting the retimed and reshaped first serial electrical data stream to external to the transceiver module;

receiving a second serial electrical data stream from external to the transceiver module;

retiming and reshaping the second serial electrical data stream;

converting the retimed and reshaped second serial electrical data stream to a second optical signal:

transmitting the second optical signal to external to the transceiver module;

wherein each step of retiming and reshaping a serial electrical data stream comprises:

recovering a clock and data from the serial electrical data stream; and

retiming the recovered data based on a clock signal; and

wherein the clock signal is switchably selectable between a received reference clock and the recovered clock.

19. The method of claim 14, wherein the first serial electrical data stream has a data rate of approximately 10 Gb/s or faster.

20. The method of claim 14, wherein the retimed and reshaped first serial electrical data stream comprises an XFI (10 Obis serial electrical interface)—compliant electrical data stream.

* * * * *