US010263723B2

(12) **United States Patent**
Soto et al.

(10) **Patent No.: US 10,263,723 B2**
(45) **Date of Patent: Apr. 16, 2019**

(54) **SYSTEM AND METHOD FOR PERFORMING HIGH-SPEED COMMUNICATIONS OVER FIBER OPTICAL NETWORKS**

(71) Applicants: **Alexander Soto**, San Diego, CA (US); **Walter Soto**, Huntington Beach, CA (US)

(72) Inventors: **Alexander Soto**, San Diego, CA (US); **Walter Soto**, Huntington Beach, CA (US)

(*) Notice: Subject to any disclaimer, the term of this patent is extended or adjusted under 35 U.S.C. 154(b) by 0 days.

(21) Appl. No.: **15/884,351**

(22) Filed: **Jan. 30, 2018**

(65) **Prior Publication Data**

US 2018/0175963 A1 Jun. 21, 2018

Related U.S. Application Data

(63) Continuation of application No. 15/095,137, filed on Apr. 10, 2016, now Pat. No. 9,887,795, which is a continuation of application No. 12/512,968, filed on Jul. 30, 2009, now Pat. No. 9,337,948, which is a continuation-in-part of application No. 11/772,187, filed on Jun. 30, 2007, now abandoned, which is a

(Continued)

(51) **Int. Cl.**

H04B 10/00	(2013.01)
H04J 14/02	(2006.01)
H04B 10/40	(2013.01)
H04B 10/2507	(2013.01)
H04B 10/2581	(2013.01)
H04B 10/516	(2013.01)

(52) **U.S. Cl.**
CPC ***H04J 14/0221*** (2013.01); ***H04B 10/2507*** (2013.01); ***H04B 10/2581*** (2013.01); ***H04B 10/40*** (2013.01); ***H04B 10/5161*** (2013.01); ***H04J 14/02*** (2013.01); ***H04J 14/0256*** (2013.01); ***H04J 14/0267*** (2013.01); ***H04J 14/0282*** (2013.01); ***H04J 14/0298*** (2013.01); *H04J 14/0227* (2013.01)

(58) **Field of Classification Search**
USPC 398/135–139; 385/88–92
See application file for complete search history.

(56) **References Cited**

U.S. PATENT DOCUMENTS

6,603,822 B2 * 8/2003 Brede G06F 17/14 375/340
7,242,868 B2 * 7/2007 Soto H04J 14/02 375/233

(Continued)

Primary Examiner — Agustin Bello

(57) **ABSTRACT**

Processing a received optical signal in an optical communication network includes equalizing a received optical signal to provide an equalized signal, demodulating the equalized signal according to an m-ary modulation format to provide a demodulated signal, decoding the demodulated signal according to an inner code to provide an inner-decoded signal, and decoding the inner-decoded signal according to an outer code. Other aspects include other features such as equalizing an optical channel including storing channel characteristics for the optical channel associated with a client, loading the stored channel characteristics during a waiting period between bursts on the channel, and equalizing a received burst from the client using the loaded channel characteristics.

23 Claims, 9 Drawing Sheets

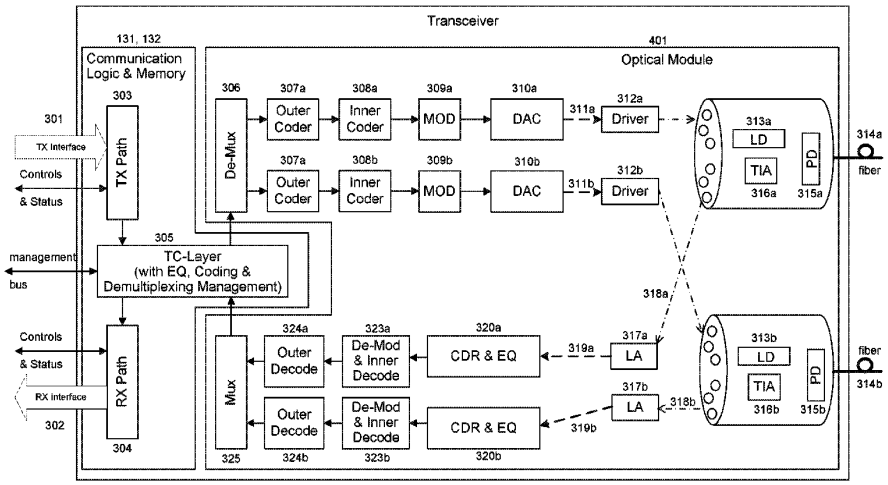

Related U.S. Application Data

continuation of application No. 10/865,547, filed on Jun. 10, 2004, now Pat. No. 7,242,868.

(60) Provisional application No. 60/480,488, filed on Jun. 21, 2003, provisional application No. 60/477,845, filed on Jun. 10, 2003.

(56) **References Cited**

U.S. PATENT DOCUMENTS

7,317,769 B2 * 1/2008 Tonietto G11B 20/10009 342/151
7,321,612 B2 * 1/2008 Tonietto G11B 20/10009 342/151
7,486,894 B2 * 2/2009 Aronson H04B 10/40 398/128
7,729,617 B2 * 6/2010 Sheth H04B 10/801 370/465
9,337,948 B2 * 5/2016 Soto H04B 10/40
2002/0149821 A1 * 10/2002 Aronson G01M 11/00 398/135
2002/0181894 A1 * 12/2002 Gilliland G02B 6/4246 385/88
2002/0181895 A1 * 12/2002 Gilliland G02B 6/4246 385/88
2003/0032390 A1 * 2/2003 Geile G06F 17/14 455/3.05
2004/0028408 A1 * 2/2004 Cox H04L 12/4625 398/66
2007/0031153 A1 * 2/2007 Aronson H04B 10/40 398/138
2008/0166124 A1 * 7/2008 Soto H04J 14/02 398/63
2010/0158530 A1 * 6/2010 Soto H04B 10/40 398/79
2011/0135312 A1 * 6/2011 El-Ahmadi H04L 1/0057 398/135
2012/0275784 A1 * 11/2012 Soto H04B 10/2503 398/38
2014/0270765 A1 * 9/2014 Cole H04B 10/27 398/48
2015/0139647 A1 * 5/2015 Soto H04B 10/2503 398/58
2017/0026145 A1 * 1/2017 Soto H04B 10/40
2017/0331579 A9 * 11/2017 Soto H04B 10/40
2018/0175963 A1 * 6/2018 Soto H04B 10/40

* cited by examiner

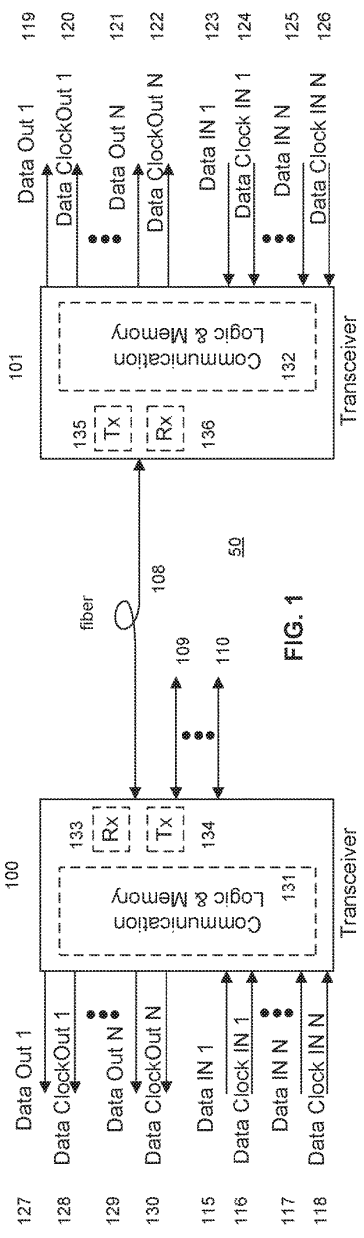
Data Out 1
Data ClockOut 1
Data Out N
Data ClockOut N
Data IN 1
Data Clock IN 1
Data IN N
Data Clock IN N
Communication Logic & Memory
Transceiver
Tx
Rx
fiber
100
101
108
109
110
50
127
128
129
130
115
116
117
118
119
120
121
122
123
124
125
126
131
132
133
134
135
136

FIG. 1

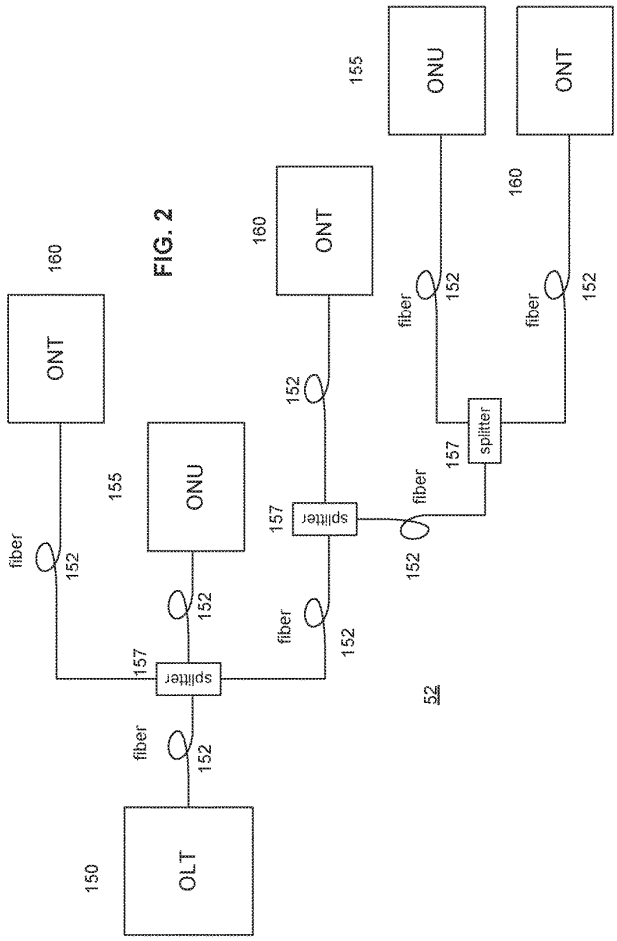
OLT
ONT
ONU
splitter
fiber
150
152
155
157
160
52

FIG. 2

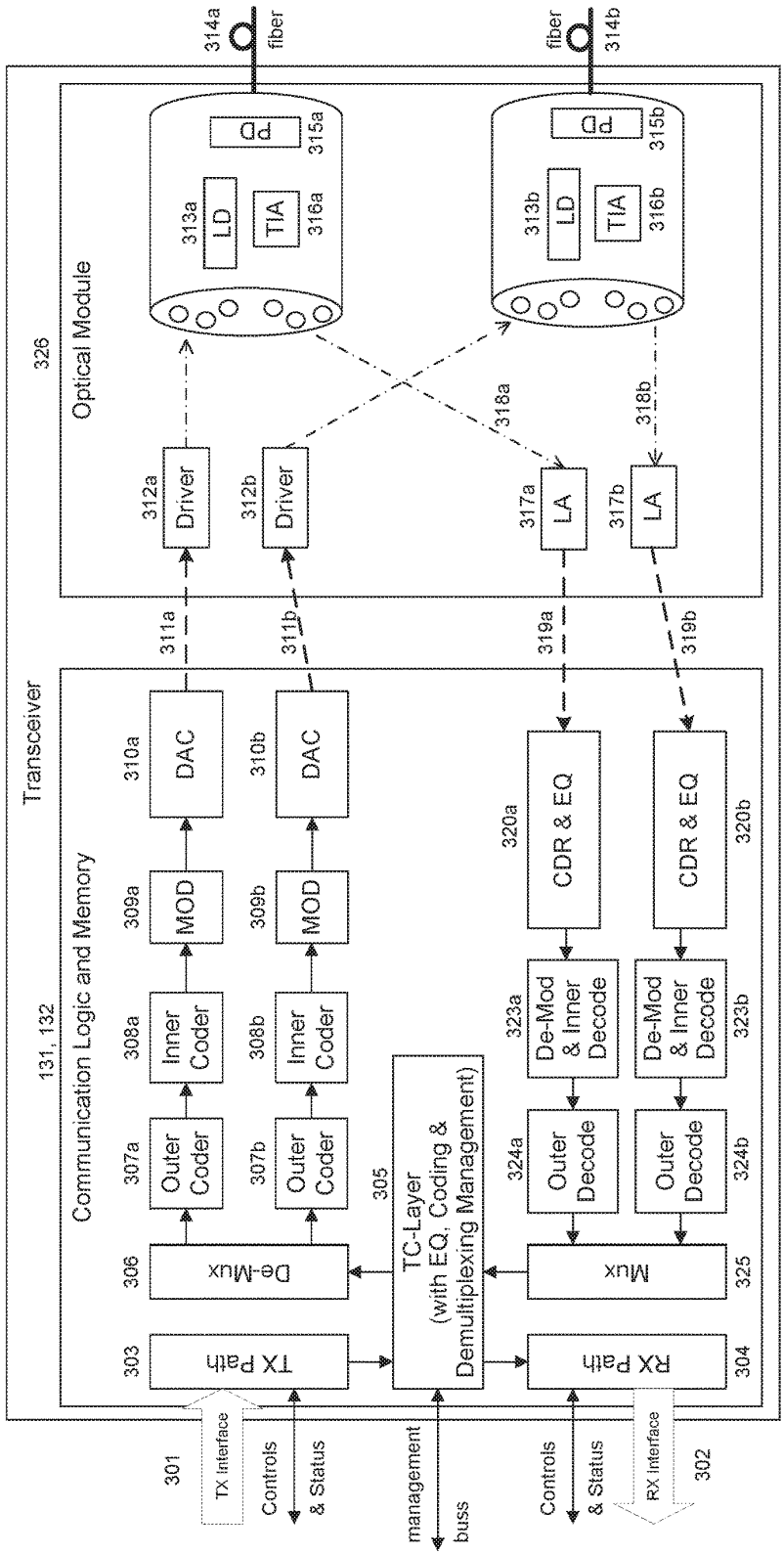
Transceiver
326
Optical Module
314a
fiber
fiber
314b
313a
LD
TIA
316a
PD
315a
313b
LD
TIA
316b
PD
315b
312a
Driver
312b
Driver
317a
LA
317b
LA
318a
318b
311a
311b
319a
319b
131, 132
Communication Logic and Memory
310a
DAC
310b
DAC
309a
MOD
309b
MOD
308a
Inner Coder
308b
Inner Coder
307a
Outer Coder
307b
Outer Coder
306
De-Mux
303
TX Path
305
TC-Layer
(with EQ, Coding &
Demultiplexing Management)
320a
CDR & EQ
320b
CDR & EQ
323a
De-Mod & Inner Decode
323b
De-Mod & Inner Decode
324a
Outer Decode
324b
Outer Decode
325
Mux
304
RX Path
301
TX Interface
Controls
& Status
management
buss
Controls
& Status
RX Interface
302

FIG. 3

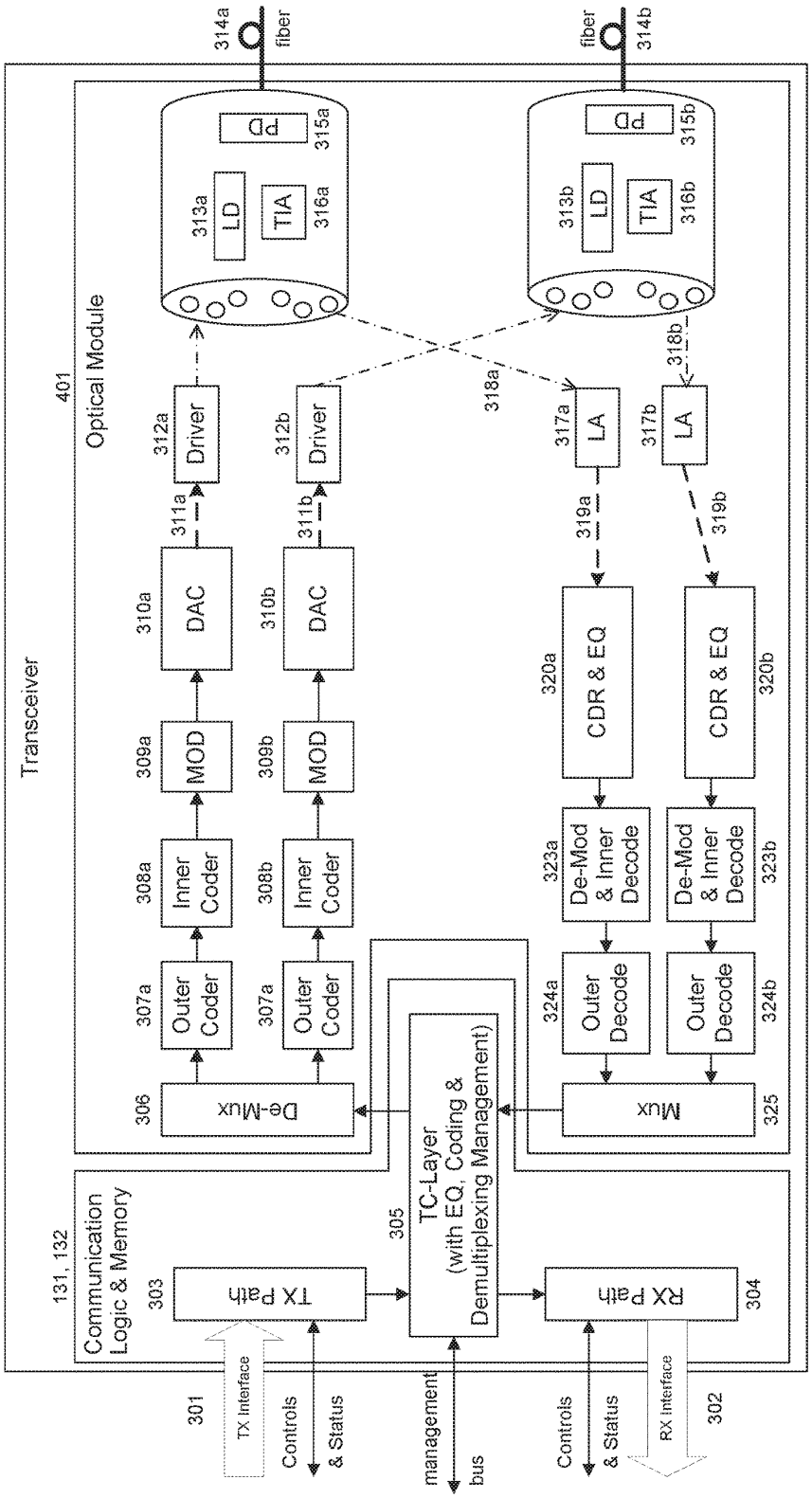
Transceiver
Optical Module
401
Communication Logic & Memory
131, 132
TX Path
303
RX Path
304
TC-Layer (with EQ, Coding & Demultiplexing Management)
305
De-Mux
306
Outer Coder
307a
Inner Coder
308a
MOD
309a
DAC
310a
311a
Driver
312a
LD
313a
TIA
316a
PD
315a
fiber
314a
Driver
312b
DAC
310b
311b
MOD
309b
Inner Coder
308b
Outer Coder
307a
LD
313b
TIA
316b
PD
315b
fiber
314b
318a
318b
LA
317a
LA
317b
319a
319b
CDR & EQ
320a
CDR & EQ
320b
De-Mod & Inner Decode
323a
De-Mod & Inner Decode
323b
Outer Decode
324a
Outer Decode
324b
Mux
325
TX Interface
301
Controls & Status
management bus
Controls & Status
RX Interface
302

FIG. 4

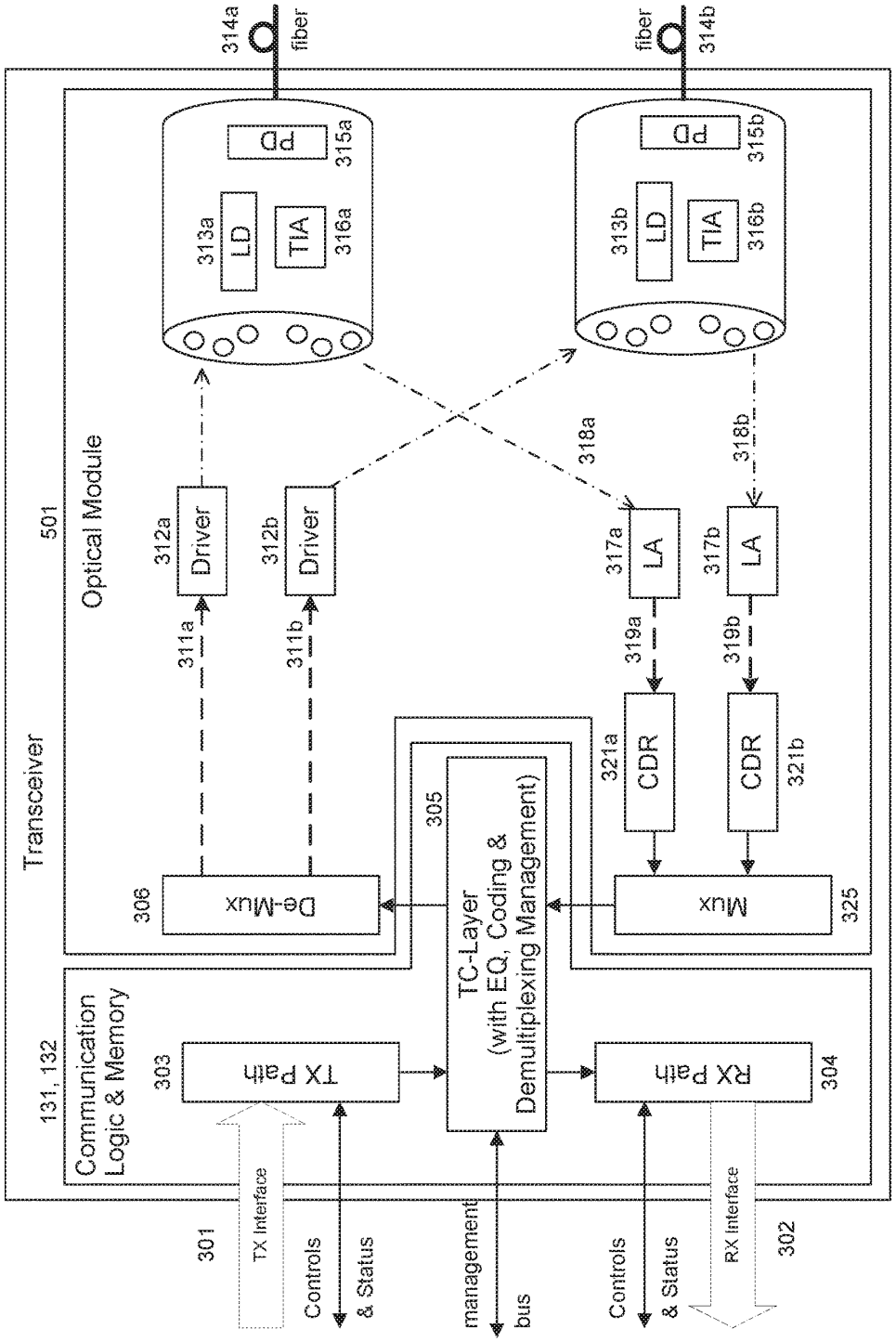
Transceiver
501
Optical Module
131, 132
Communication Logic & Memory
TX Path
303
TC-Layer (with EQ, Coding & Demultiplexing Management)
305
RX Path
304
De-Mux
306
Mux
325
Driver
312a
Driver
312b
311a
311b
LD
313a
TIA
316a
PD
315a
LD
313b
TIA
316b
PD
315b
318a
318b
LA
317a
LA
317b
319a
319b
CDR
321a
CDR
321b
314a
fiber
fiber
314b
TX Interface
301
Controls & Status
management bus
Controls & Status
RX Interface
302

FIG. 5

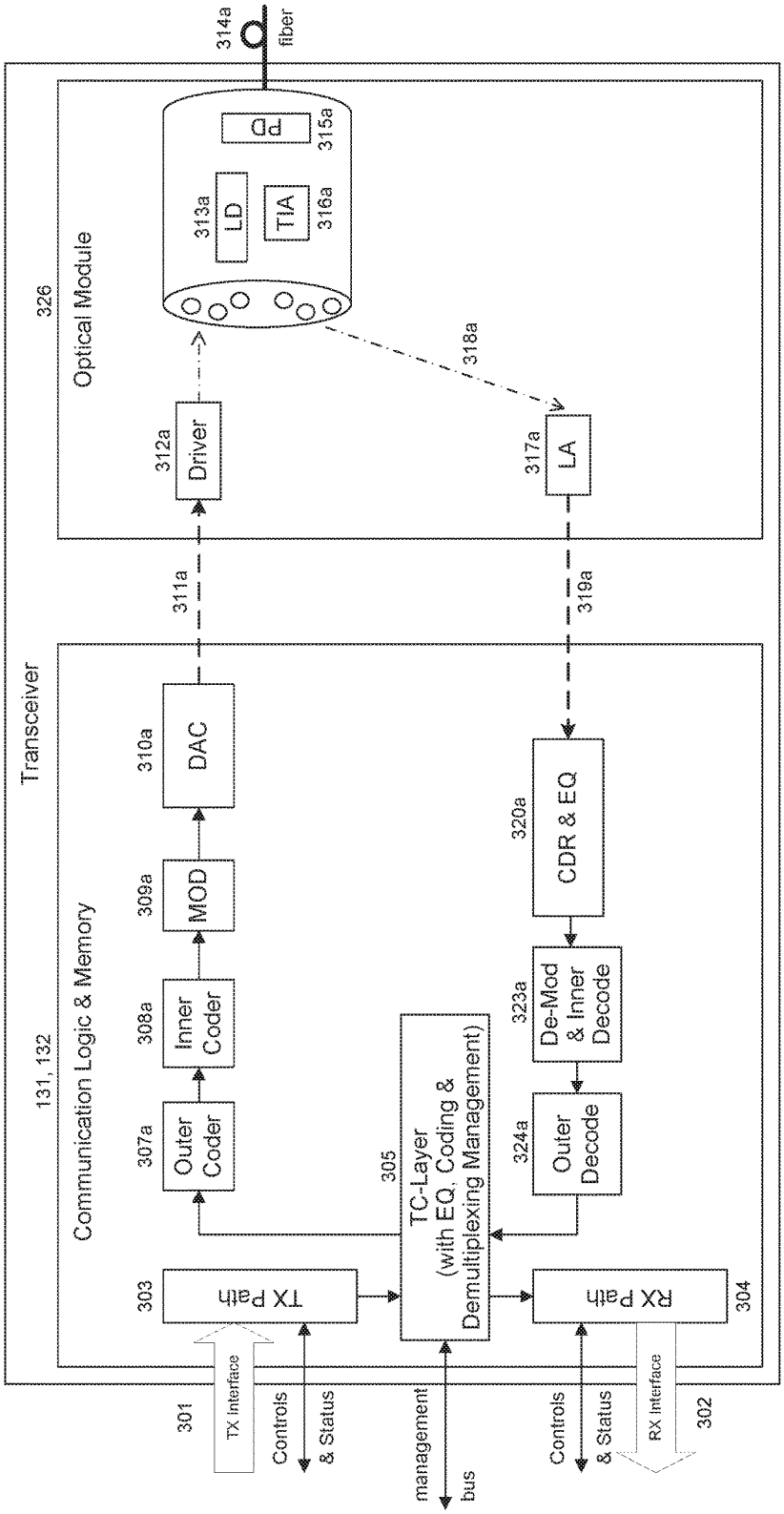
Transceiver
131, 132
Communication Logic & Memory
326
Optical Module
314a
fiber
PD
315a
LD
313a
TIA
316a
318a
312a
Driver
317a
LA
311a
319a
310a
DAC
309a
MOD
308a
Inner Coder
307a
Outer Coder
305
TC-Layer (with EQ, Coding & Demultiplexing Management)
320a
CDR & EQ
323a
De-Mod & Inner Decode
324a
Outer Decode
303
TX Path
RX Path
304
301
TX Interface
Controls & Status
management bus
Controls & Status
RX Interface
302

FIG. 6A

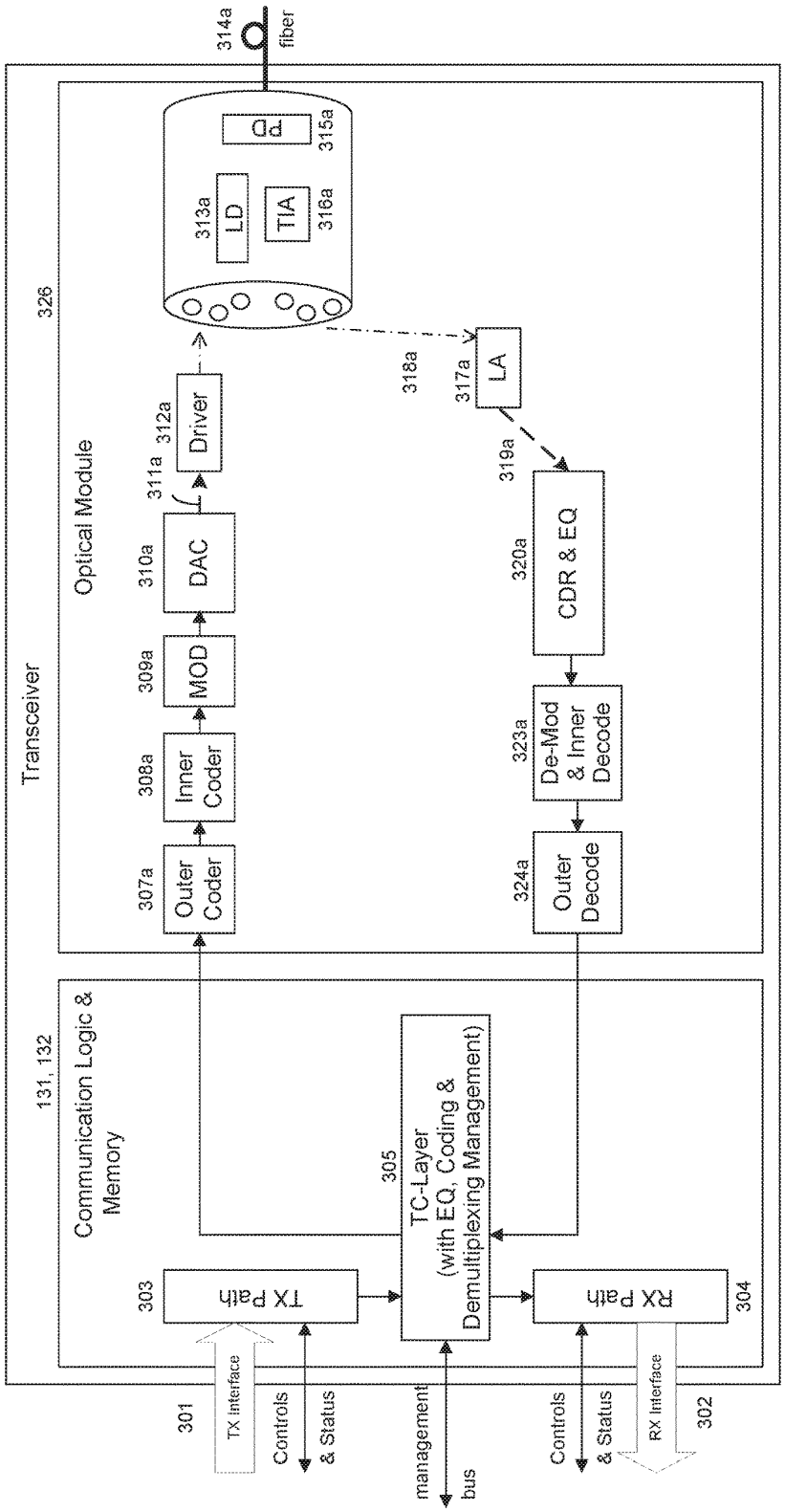
Transceiver
326
Optical Module
Communication Logic & Memory
131, 132
Outer Coder
307a
Inner Coder
308a
MOD
309a
DAC
310a
311a
Driver
312a
LD
313a
TIA
316a
PD
315a
314a
fiber
LA
317a
318a
CDR & EQ
320a
319a
De-Mod & Inner Decode
323a
Outer Decode
324a
TC-Layer (with EQ, Coding & Demultiplexing Management)
305
TX Path
303
RX Path
304
TX Interface
301
RX Interface
302
Controls & Status
management bus
Controls & Status

FIG. 6B

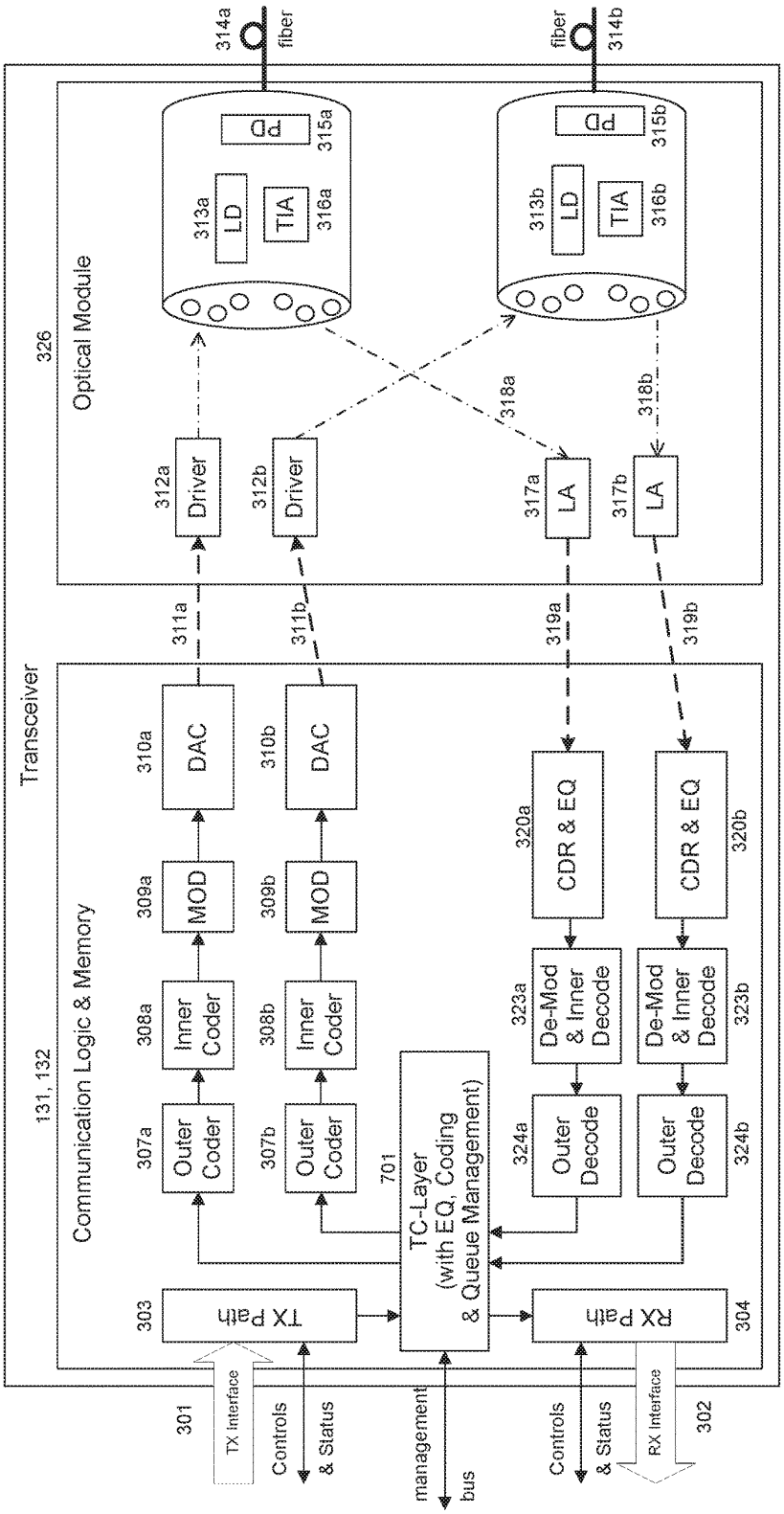
Transceiver
131, 132
Communication Logic & Memory
326
Optical Module
TX Path
RX Path
303
304
TC-Layer
(with EQ, Coding
& Queue Management)
701
Outer Coder
Inner Coder
MOD
DAC
307a
307b
308a
308b
309a
309b
310a
310b
311a
311b
312a
312b
Driver
LA
317a
317b
318a
318b
319a
319b
CDR & EQ
320a
320b
De-Mod
& Inner
Decode
323a
323b
Outer
Decode
324a
324b
LD
TIA
PD
313a
313b
316a
316b
315a
315b
fiber
314a
314b
301
302
TX Interface
RX Interface
Controls
& Status
management
bus

FIG. 7

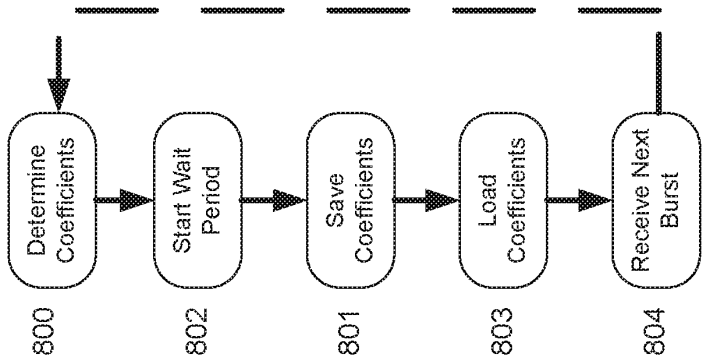
Determine Coefficients
Start Wait Period
Save Coefficients
Load Coefficients
Receive Next Burst
800
802
801
803
804

FIG. 8B

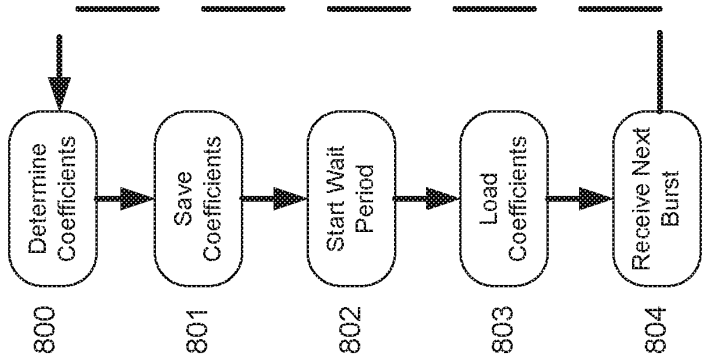
Determine Coefficients
Save Coefficients
Start Wait Period
Load Coefficients
Receive Next Burst
800
801
802
803
804

FIG. 8A

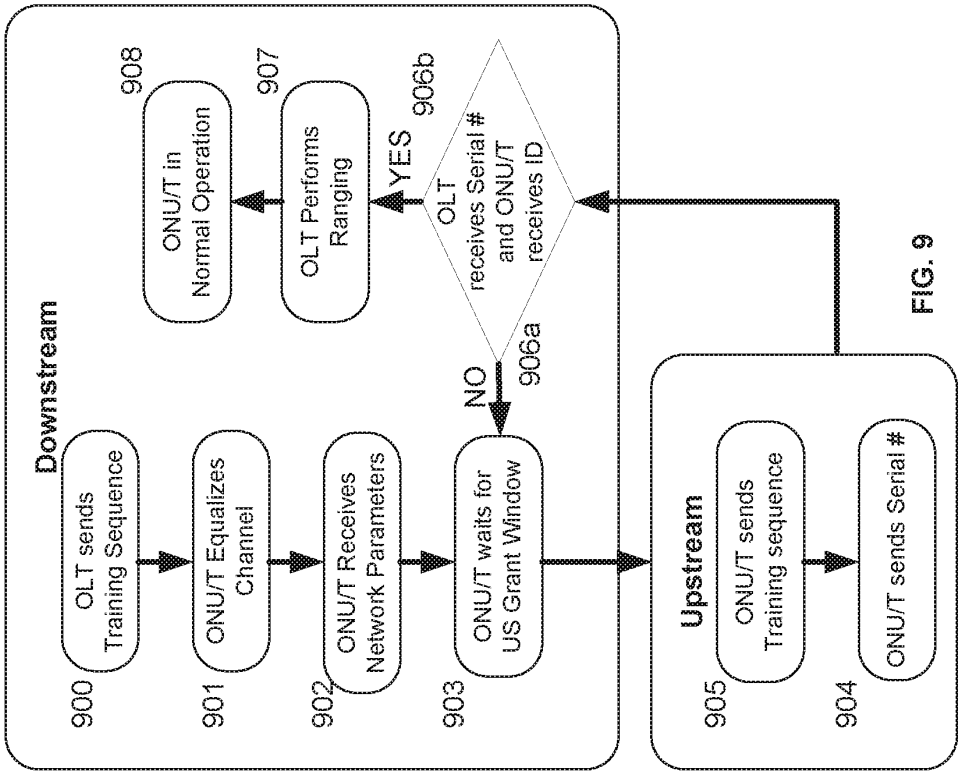
Downstream
900
OLT sends Training Sequence
901
ONU/T Equalizes Channel
902
ONU/T Receives Network Parameters
903
ONU/T waits for US Grant Window
906a
NO
906b
OLT receives Serial # and ONU/T receives ID
YES
907
OLT Performs Ranging
908
ONU/T in Normal Operation
Upstream
905
ONU/T sends Training sequence
904
ONU/T sends Serial #

FIG. 9

SYSTEM AND METHOD FOR PERFORMING HIGH-SPEED COMMUNICATIONS OVER FIBER OPTICAL NETWORKS

CROSS-REFERENCE TO RELATED APPLICATIONS

This application is filed as a 37 C.F.R. 1.53(b) as a continuation claiming the benefit under 35 U.S.C § 120 of the pending U.S. patent application Ser. No. 12/512,968, "System and Method for Performing High-Speed Communications over Fiber Optical Networks", which was filed by the same inventors on Jul. 30, 2009 claiming the benefit under 37 C.F.R. 1.53(b)(2) of U.S. patent application Ser. No. 11/772,187 filed on Jun. 30, 2007, which claims benefit of commonly-assigned U.S. patent application Ser. No. 10/865,547 filed on Jun. 10, 2004, now U.S. Pat. No. 7,242,868, which claims the benefit of U.S. Provisional Application No. 60/477,845 filed Jun. 10, 2003, incorporated herein by reference, and U.S. Provisional Application No. 60/480,488 filed Jun. 21, 2003, incorporated herein by reference.

FIELD OF THE INVENTION

The invention relates to optical fiber communications generally, and more specifically to m-ary modulation in optical communication networks.

BACKGROUND OF THE INVENTION

Line coding is a process by which a communication protocol arranges symbols that represent binary data in a particular pattern for transmission. Conventional line coding used in fiber optic communications includes non-return-to-zero (NRZ), return-to-zero (RZ), and biphase, or Manchester. The binary bit stream derived from these line codes can be directly modulated onto wavelengths of light generated by the resonating frequency of a laser. Traditionally direct binary modulation based transmission offers an advantage with regard to the acceptable signal-to-noise ratio (SNR) at the optical receiver, which is one of the reasons direct binary modulation methods are used in the Datacom Ethernet/IP, Storage Fiber-Channel/FC and Telecom SONET/SDH markets for transmission across nonmultiplexed unidirectional fiber links.

The performance of a fiber optic network can be measured by the maximum data throughput rate (or information carrying capacity) and the maximum distance between source and destination achievable (or reach). For Passive Optical Networks (PONs) in particular, additional measures of performance are the maximum number of Optical Networking Units (ONUs) and/or Optical Networking Terminals (ONTs) possible on a network and the minimum and maximum distance between the Optical Line Terminator (OLT) and an ONU/ONT. These performance metrics are constrained by, among other things, amplitude degradation and temporal distortions as a result of light traveling through an optical fiber.

Amplitude degradation is substantially a function of length or distance between two end points of an optical fiber. Temporal distortion mechanisms include intramodal (chromatic) dispersion and intermodal (modal) dispersion. Intramodal dispersion is the dominant temporal dispersion on Single-mode fiber (SMF), while intermodal dispersion is dominant on Multi-mode fiber (MMF). Both types of temporal distortions are measured as functions of frequency or

rate of transmission (also referred as line rate of a communication protocol) over distance in MHz·km. Temporal distortions are greater, hence a constraint on network performance, with increasing frequency transmission.

SUMMARY OF THE INVENTION

In general, in one aspect, the invention includes a method for processing a received optical signal in an optical communication network, the method including: determining a first set of coefficients to equalize a portion of an optical signal received over a first optical link including using a blind equalization method that does not use a known training sequence to equalize the portion of the optical signal, equalizing the portion of the optical signal using the determined coefficients, and demodulating the equalized portion of the optical signal according to an m-ary modulation format.

Aspects of the invention may include one or more of the following features. The method includes determining a second set of coefficients to equalize a portion of an optical signal received over a second optical link. The method includes selecting one of the first or second set of coefficients based on a source of the portion of optical signal being equalized. The portion of the optical signal includes a burst within a time slot of the first optical link. The method includes storing the determined coefficients. The method includes retrieving the stored coefficients for equalizing a second portion of the optical signal corresponding to a portion received from a same source as generated the first portion of the optical signal. The coefficients are retrieved between signal bursts on the first optical link. The stored coefficients are retrieved for respective portions of the optical signals that correspond to respective signal sources. The first optical link includes a link in a point-to-multipoint passive optical network. The m-ary modulation format is selected from the group consisting of quadrature amplitude modulation, quadrature phase shift keying, orthogonal frequency division multiplexing and pulse amplitude modulation. The method includes demodulating a received first data stream and demodulating a second data stream received in the optical signal, and multiplexing the first and second data streams.

In general, in another aspect, the invention includes optical communication system including: a first transceiver coupled by an optical network to a second transceiver and third transceiver, the first transceiver including an equalization block and a modulation block, the equalization block operable to determine a first set of coefficients to equalize a portion of an optical signal received over the optical network from the second transceiver and a second set of coefficients to equalize a portion of the optical signal received over the optical network from the third transceiver, the equalization block including a blind equalization routine that does not use a known training sequence to equalize the portions of the optical signal, the equalization block operable to equalize the portions of the optical signal using the determined coefficients, and the modulation block operable to demodulate equalized portions of the optical signal according to an m-ary modulation format.

Aspects of the invention may include one or more of the following features. The optical network includes a first optical link for coupling the first and second transceiver, and a second optical link for coupling the first and third transceivers and where the equalization block is operable to select one of the first or second set of coefficients based on a source of the portion of optical signal being equalized. The

equalization block is operable to store the first and second sets of coefficients for later retrieval and use to equalize portions of the optical signal. The portion of the optical signal includes a burst within a time slot on the optical network. The equalization block is operable to retrieve the sets of coefficients between signal bursts on the optical network. The optical network includes a link in a point-to-multipoint passive optical network. The m-ary modulation format is selected from the group consisting of quadrature amplitude modulation, quadrature phase shift keying, orthogonal frequency division multiplexing and pulse amplitude modulation. The system includes a multiplexer, the modulation block operable to demodulating a received first data stream and a second data stream received in the optical signal, and the multiplexer operable to multiplex the first and second data streams. The system includes a transmission convergence layer block for processing data streams received by the first transceiver, the transmission convergence layer block operable to control the demultiplexing of data streams including control of the multiplexer. The optical network is an optical distribution network. The first transceiver is an optical line terminator. The second and third transceivers are optical network terminals or optical network units.

In general, in another aspect, the invention includes a method for processing data for transmission in an optical communication network, the method including: demultiplexing a data stream into a first demultiplexed data stream and a second demultiplexed data stream, modulating each of the first and second data streams according to an m-ary modulation format, transmitting the first modulated data stream over a first optical link; and transmitting the second modulated data stream over a second optical link.

In general, in another aspect, the invention includes an optical communication system including: a demultiplexer operable to demultiplex a data stream into a first demultiplexed data stream and a second demultiplexed data stream, a modulation block operable to modulate each of the first and second data streams according to an m-ary modulation format, transmitting means operable to transmit the first modulated data stream over a first optical link and the second modulated data stream over a second optical link.

In general, in another aspect, the invention includes a method for processing a received optical signal in an optical communication network, the method including: equalizing a received optical signal to provide an equalized signal, demodulating the equalized signal according to an m-ary modulation format to provide a demodulated signal, decoding the demodulated signal according to an inner code to provide an inner-decoded signal, and decoding the inner-decoded signal according to an outer code.

Aspects of the invention may include one or more of the following features. The m-ary modulation format is selected from the group consisting of quadrature amplitude modulation, quadrature phase shift keying, orthogonal frequency division multiplexing and pulse amplitude modulation. Equalizing the received optical signal includes equalizing the received optical signal using a blind equalization routine that does not use a known training sequence. Equalizing the received optical signal includes equalizing the received optical signal using a known training sequence. The known training sequence is multiplexed in a frame within the received optical signal. The inner code includes a trellis code. The outer code includes an error correction code. The outer code includes a: Reed-Solomon code; trellis code; Low-density parity-check code, or a Turbo code.

In general, in another aspect, the invention includes a transceiver including: an equalizer for equalizing a received optical signal to provide an equalized signal, a demodulator in communication with the equalizer for demodulating the equalized signal according to an m-ary modulation format to provide a demodulated signal, an inner-decoder in communication with the demodulator for decoding the demodulated signal according to an inner code to provide an inner-decoded signal, and an outer-decoder in communication with the inner-decoder for decoding the inner-decoded signal according to an outer code.

Aspects of the invention may include one or more of the following features. The transceiver includes an optical module including a first bi-directional optical fiber interface including a first detector and a first driver, and a second bi-directional optical fiber interface including a second detector and a second driver, and management means for managing data flow across the first bi-directional optical fiber interface and across the second bi-directional optical fiber interface. The transceiver includes an optical module including a first bi-directional optical fiber interface including a first detector and a first driver, and a second bi-directional optical fiber interface including a second detector and a second driver, and a multiplexer for multiplexing a first demultiplexed data stream received over the first bi-directional optical fiber interface and a second demultiplexed data stream received over the second bi-directional optical fiber interface into a multiplexed data stream for transmission. The transceiver includes an optical module including a first bi-directional optical fiber interface including a first detector and a first driver, and a second bi-directional optical fiber interface including a second detector and a second driver, and a queue manager for managing traffic for a first bi-directional link associated with the first bi-directional optical fiber interface independently from traffic for a second bi-directional link associated with the second bi-directional optical fiber interface.

In general, in another aspect, the invention includes a transceiver including: an optical module including a first bi-directional optical fiber interface including a first detector and a first driver, and a second bi-directional optical fiber interface including a second detector and a second driver, and management means for managing data flow across the first bi-directional optical fiber interface and across the second bi-directional optical fiber interface.

Aspects of the invention may include one or more of the following features. The management means includes a multiplexer for multiplexing a first demultiplexed data stream received over the first bi-directional optical fiber interface and a second demultiplexed data stream received over the second bi-directional optical fiber interface into a multiplexed data stream for transmission. The management means is configured to demultiplex a data stream over a plurality of fiber links that excludes one or more failed fiber links. The management means includes a queue manager for managing traffic across the first bi-directional fiber interface independently from traffic for the second bi-directional fiber interface. The management means is configured to change the alignment of received data bits to adjust for an order of optical fiber connections to the first bi-directional optical fiber interface and the second bi-directional optical fiber interface.

In general, in another aspect, the invention includes a method for equalizing an optical channel including: storing channel characteristics for the optical channel associated with a client, loading the stored channel characteristics

during a waiting period between bursts on the channel, and equalizing a received burst from the client using the loaded channel characteristics.

Aspects of the invention may include one or more of the following features. The method includes determining that the waiting period occurs before a burst from the client based on a schedule. The method includes updating the stored channel characteristics. The method includes providing a grant window, transmitting an identification number to the client in response to receiving a serial number from the client after the grant window. The method includes determining a distance from an upstream device to the client. The method includes compensating for communication delays between the upstream device and the client based on the determined distance.

In general, in another aspect, the invention includes a method for communicating data on a fiber optic network, the method including: modulating and demodulating data traffic on an optical link in the network in an m-ary modulation format; encoding and decoding data traffic on an optical link in the network according to an inner coding routine and an outer coding routine, demultiplexing data traffic from an optical link in the network and transmitting the data traffic across a plurality of optical fiber links in the network, multiplexing the data traffic from the plurality of optical fiber links, and equalizing a receive channel in the network to remove temporal distortions.

Aspects of the invention may include one or more of the following features. The method includes equalizing the receive channel according to a blind equalization routine. The method includes equalizing the receive channel according to a decision directed equalization routine. The method includes saving and loading coefficients for equalizing the receive channel for each of a plurality of transmitting sources. The method includes conveying a training sequence for a decision directed equalization routine as part of an in-use communication protocol. A training sequence for a decision directed equalization routine is conveyed as part of the activation process for an optical network terminal or optical network unit. An incorrect connection of an optical fiber link is corrected without having to physically change the connection.

In general, in another aspect, the invention includes a method for communicating on a passive optical network between a central transmission point and a plurality of receiving client end points, the method including: preparing downstream data for transmission and transmitting an optical downstream continuous mode signal demultiplexed across a plurality of bi-directional fibers using a plurality of wavelengths of light, receiving an optical downstream continuous mode signal demultiplexed from the plurality of bi-directional fibers using the plurality of wavelengths of light and recovering a downstream data transmission, preparing upstream data for transmission and transmitting an optical upstream burst mode signal demultiplexed across the plurality of bi-directional fibers using the plurality of wavelengths of light, and receiving an optical burst mode signal demultiplexed from the plurality of bi-directional fibers using the plurality of wavelengths of light and recovering an upstream data transmission.

Aspects of the invention may include one or more of the following features. The central transmission point includes an optical line terminal, and the end points are operative as transceivers in a passive optical network. The upstream and downstream data for transmission are conveyed by respective different industry-standard services.

Implementations of the invention may include one or more of the following advantages.

A system is proposed that provides for high-speed communications over fiber optic networks. The system may include the use of the one or more of the following techniques either individually or in combination: m-ary modulation; channel equalization; demultiplexing across multiple fibers, coding and error correction. M-ary modulation allows for increased data throughput for a given line rate due to an increase in the number of bits per symbol transmitted. Channel equalization reduces the effects of temporal distortions allowing for increased reach. Demultiplexing across multiple fibers allows lower lines rates for a given data throughput rate due to the increased aggregate data throughput from the multiplexing. Coding and error correction allows for a greater selection of qualifying optical components that can be used in the network and complements m-ary modulation and channel equalization for overall system performance improvement as measured by transmit energy per bit. These methods when combined (in part or in total) increase the data throughput and reach for fiber optic networks. For PONs in particular, these methods may increase the number of ONU/ONTs and the distance between OLT and ONU/ONT by decreasing the line rate as compared to a conventional communication system of equivalent data throughput.

BRIEF DESCRIPTION OF THE DRAWINGS

FIG. **1** illustrates a fiber optic data network.

FIG. **2** illustrates a block diagram of a passive optical network.

FIG. **3** illustrates a block diagram of a high-speed communication system for fiber optic networks.

FIG. **4** illustrates a block diagram of an alternative high-speed communication system for fiber optic networks.

FIG. **5** illustrates a block diagram of an alternative high-speed communication system for fiber optic networks.

FIG. **6**A illustrates a block diagram of an alternative high-speed communication system for fiber optic networks.

FIG. **6**B illustrates a block diagram of an alternative high-speed communication system for fiber optic networks.

FIG. **7** illustrates a block diagram of an alternative high-speed communication system for fiber optic networks.

FIG. **8**A illustrates an exemplary flow diagram for upstream burst mode communication processing.

FIG. **8**B illustrates another exemplary flow diagram for upstream burst mode communication processing.

FIG. **9** illustrates an exemplary flow diagram for a downstream continuous mode communication equalization process.

DETAILED DESCRIPTION

Referring to FIG. **1**, wherein like reference numerals designate identical or corresponding parts throughout the several views and embodiments, a high-level fiber optic data network **50** includes a first transceiver **100** in communication with a second transceiver **101** via a fiber **108**. The first transceiver **100** and the second transceiver **101** include transmitter circuitry (Tx) **134**, **135** to convert electrical data input signals into modulated light signals for transmission over the fiber **108**. In addition, the first transceiver **100** and the second transceiver **101** also include receiver circuitry (Rx) **133**, **136** to convert optical signals received via the fiber **108** into electrical signals and to detect and recover encoded data and/or clock signals. First transceiver **100** and

second transceiver **101** may contain a micro controller (not shown) and/or other communication logic and memory **131**, **132** for network protocol operation. Although the illustrated and described implementations of the transceivers **100**, **101** include communication logic and memory in a same package or device as the transmitter circuitry **134**, **135** and receiver circuitry **133**, **136**, other transceiver configurations may also be used.

First transceiver **100** transmits/receives data to/from the second transceiver **101** in the form of modulated optical light signals of known wavelength via the optical fiber **108**. The transmission mode of the data sent over the optical fiber **108** may be continuous, burst or both burst and continuous modes. Both transceivers **100**,**101** may transmit a same wavelength (e.g., the light signals are polarized and the polarization of light transmitted from one of the transceivers is perpendicular to the polarization of the light transmitted by the other transceiver). Alternatively, a single wavelength can be used by both transceivers **100**, **101** (e.g., the transmissions can be made in accordance with a time-division multiplexing scheme or similar protocol).

In another implementation, wavelength-division multiplexing (WDM) may also be used. WDM is herein defined as any technique by which two optical signals having different wavelengths may be simultaneously transmitted bi-directionally with one wavelength used in each direction over a single fiber. In yet another implementation, coarse wavelength-division multiplexing (CWDM) or dense wavelength-division multiplexing (DWDM) may be used. CWDM and DWDM are herein defined as any technique by which two or more optical signals having different wavelengths are simultaneously transmitted in the same direction. The difference between CWDM and DWDM is CWDM wavelengths are typically spaced 20 nanometers (nm) apart, compared with 0.4 nm spacing for DWDM wavelengths. Both CWDM and DWDM may be used in bi-directional communications. In bi-directional communications, e.g. if wavelength-division multiplexing (WDM) is used, the first transceiver **100** may transmit data to the second transceiver **101** utilizing a first wavelength of modulated light conveyed via the fiber **108** and, similarly, the second transceiver **101** may transmit data via the same fiber **108** to the first transceiver **100** utilizing a second wavelength of modulated light conveyed via the same fiber **108**. Because only a single fiber is used, this type of transmission system is commonly referred to as a bi-directional transmission system. Although the fiber optic network illustrated in FIG. **1** includes a first transceiver **100** in communication with a second transceiver **101** via a single fiber **108**, other implementations of fiber optic networks, such as those having a first transceiver in communication with a plurality of transceivers via a plurality of fibers (e.g. shown in FIG. **2**), may also be used.

Electrical data input signals (Data IN **1**) **115**, as well as any optional clock signal (Data Clock IN **1**) **116**, are routed to the transceiver **100** from an external data source (not shown) for processing by the communication logic and memory **131**. Communication logic and memory **131** process the data and clock signals in accordance with an in-use network protocol. Communication logic and memory **131**, **132** provides management functions for received and transmitted data including queue management (e.g., independent link control) for each respective link, demultiplexing/multiplexing and other functions as described further below. The processed signals are transmitted by the transmitter circuitry **134**. The resulting modulated light signals produced from the first transceiver's **100** transmitter **134** are then conveyed to the second transceiver **101** via the fiber **108**. The second transceiver **101**, in turn, receives the modulated light signals via the receiver circuitry **136**, converts the light signals to electrical signals, processes the electrical signals using the communication logic and memory **132** (in accordance with an in-use network protocol) and, optionally, outputs the electrical data output signals (Data Out **1**) **119**, as well as optional clock signals (Data Clock Out **1**) **120**.

Similarly, the second transceiver **101** receives electrical data input signals (Data IN **1**) **123**, as well as any optional clock signals (Data Clock IN) **124**, from an external data source (not shown) for processing by the communication logic and memory **132** and transmission by the transmitter circuitry **135**. The resulting modulated light signals produced from the second transceiver's **101** transmitter **135** are then conveyed to the first transceiver **100** using the optical fiber **108**. The first transceiver **100**, in turn, receives the modulated light signals via the receiver circuitry **133**, converts the light signals to electrical signals, processes the electrical signals using the communication logic and memory **131** (in accordance with an in-use network protocol), and, optionally, outputs the electrical data output signals (Data Out **1**) **127**, as well as any optional clock signals (Data Clock Out **1**) **128**.

Fiber optic data network **50** may also include a plurality of electrical input and clock input signals, denoted herein as Data IN N **117**/**125** and Data Clock IN N **118**/**126**, respectively, and a plurality of electrical output and clock output signals, denoted herein as Data Out N **129**/**121** and Data Clock Out N **130**/**122**, respectively. The information provided by the plurality of electrical input signals may or may not be used by a given transceiver to transmit information via the fiber **108** and, likewise, the information received via the fiber **108** by a given transceiver may or may not be outputted by the plurality of electrical output signals. The plurality of electrical signals denoted above can be combined to form data plane or control plane bus(es) for input and output signals respectively. In some implementations, the plurality of electrical data input signals and electrical data output signals are used by logic devices or other devices located outside (not shown) a given transceiver to communicate with the transceiver's communication logic and memory **131**, **132**, transmit circuitry **134**, **135**, and/or receive circuitry **133**,**136**.

FIG. **2** illustrates an implementation of a passive optical network (PON) **52**, where the functions described above associated with the first transceiver **100** and the second transceiver **101** of FIG. **1**, are implemented in an optical line terminator (OLT) **150** and one ore more optical networking units (ONU) **155**, and/or optical networking terminals (ONT) **160**, respectively. PON(s) **52** may be configured in either a point-to-point network architecture, wherein one OLT **150** is connected to one ONT **160** or ONU **155**, or a point-to-multipoint network architecture, wherein one OLT **150** is connected to a plurality of ONT(s) **160** and/or ONU(s) **155**. In the implementation shown in FIG. **2**, an OLT **150** is in communication with multiple ONTs/ONUs **160**, **155** via a plurality of optical fibers **152**. The fiber **152** coupling the OLT **150** to the PON **52** is also coupled to other fibers **152** connecting the ONTs/ONUs **160**, **155** by one or more passive optical splitters **157**. All of the optical elements between an OLT and ONTs/ONUs are often referred to as the Optical Distribution Network (ODN). Other alternate network configurations, including alternate implementations of point-to-multipoint networks are also possible.

FIG. **3** shows a system block diagram for an implementation of transceiver **100**. It will be appreciated that, while not always shown, one or more elements or blocks in the

following embodiments may be sealed in one or more faraday cages or combined with blocks in faraday cages already shown. It will also be appreciated that, while not shown, one or more elements or blocks in the following embodiments may be combined onto one or more integrated circuits (IC) or surface mount photonic (SMP) devices. The following is a description of the functions and responsibilities that are part of an implementation of the Communication Logic & Memory **131** of transceiver **100**. The Communication Logic & Memory **131** includes an asynchronous or synchronous system transmit (TX) interface **301** and receive (RX) interface **302** that is supported by the TX Path **303** and RX Path **304** blocks. System interfaces **301**,**302** and management or control interfaces can be selected from conventional interfaces including serial, serial XFI, parallel, GMII, XGMII, SGMII, RGMII or XAUI or some other interface may be used. TX Path **303** and RX Path **304** blocks manage the TX and RX interfaces **301**,**302** and feed data into and get data from the transmission convergence layer or media access control (TC-Layer/MAC) block **305**. TX Path **303** and RX Path **304** blocks may perform line code adaptation functions (e.g., line coding used outside the transceiver can be terminated by a TX Path block **303** or sourced by a RX Path block **304** to allow a bit stream, cell, frame, and/or packet formatted data to be adapted for processing by a TC-Layer/MAC block **305**). The TC-Layer/MAC **305** block creates the transport system that the data traffic, management and control agents will exploit. TC-Layer/MAC **305** block includes a TC-layer protocol stack such as specified in the ITU G.984 specification (incorporated herein by reference), IEEE 802.3ah MAC protocol stack specification (incorporated herein by reference) or a derivative thereof. A variety of other protocol stacks may also be used. The TC-Layer/MAC **305** block may perform the additional functions of equalizer, coding, queue and demultiplexing management. The TC-Layer/MAC **305** block sends transmit data to a DeMux **306** block, which splits the transmitting data into a plurality of data paths (two paths shown in FIG. **3**) for demultiplexing data across multiple fibers. Some implementations need not include DeMux **306** block (and hence do not support demultiplexing data across multiple fibers). DeMux **306** block may demultiplex data across a subset of fibers to exclude fibers experiencing link failure to ensure data communications continue. The exclusion of fiber links experiencing failure is controlled by the TC-Layer/MAC **305** block as part of the demultiplexing management function.

After DeMux **306** block, in one implementation, the transmit paths have analogous processing blocks. In an alternative implementation, independent signal processing can be supported in each path. FIG. **3** shows two transmit paths, though more can be included. In a transmit path, the transmit data is provided to the outer coder **307***a*, **307***b* block. In one implementation, outer coder **307***a* performs a reed-solomon coding. The outer coder **307***a*, **307***b* block provides data to the inner coder **308***a*, **308***b* block. In order to improve the energy per bit required to deliver the transmitting data, an inner coder **308***a*, **308***b* is used. Outer coder **307***a*, **307***b* may be used to support forward error correction (FEC) recovery of bit(s) errors. In one implementation, inner coder **308***a*, **308***b* implements a trellis coding method. Data from the inner coder **308***a*, **308***b* is provided to Modulation (MOD) **309***a*, **309***b* block. Alternatively, in some implementations, the outer coder **307***a*, **307***b* and inner coder **308***a*, **308***b* blocks are not used, and the output of the DeMux **306** block is provided directly to the MOD **309***a*, **309***b* block. Other outer coding methods that work on bit or symbol streams of arbitrary length can be used, for example linear block codes such as Low-density parity-check (LDPC) and convolutional codes such as Turbo code may be used. Other inner coding methods that are complementary to the outer code as well as inner coding methods that are designed to shape or control the relative intensity noise (RIN) of the optical transmitter to improve overall system performance may be used. For example, an inner coder that dynamically adapts to measured RIN or compensates for measured temperature or other artifacts of laser design may be used.

To increase the number of bits per symbol transmitted, m-ary modulation is performed in the MOD **309***a*, **309***b* block. In one implementation, an m-ary modulation method such as Quadrature Amplitude Modulation (QAM), QAM-32, QAM-256, Pulse Amplitude Modulation (PAM), PAM-5, PAM-17, Quadrature Phase Shift Keying (QPSK), differential QPSK (DQPSK), return-to-zero QPSK (RZ-QPSK), dual-polarized QPSK (DP-QPSK), or Orthogonal Frequency Division Multiplexing (OFDM) is used. Other m-ary modulation communication methods can be used, in particular other coherent modulation techniques which are known in the art. After processing by the MOD **309***a*, **309***b* block, the transmit data is converted to an analog signal by a Digital to Analog Converter (DAC) **310***a*, **310***b*. In one implementation, DAC **310***a*, **310***b* is configured to shape, condition or emphasize the signal for improved transmission performance. The DAC **310***a*, **310***b* passes the transmit data via electrical signals **311***a*, **311***b* to the laser driver (Driver) **312***a*, **312***b* as part of an implementation of TX **134** in an Optical Module **326**. The driver **312***a*, **312***b* drives an optical transmitter, such as the Laser Diode (LD) **313***a*, **313***b*, which transmits light in response to transmit data signals received from the driver **312***a*, **312***b*. The light emitted from LD **313***a*, **313***b* is directed into the fibers **314***a*, **314***b* with the aid of a fiber optic interface (not shown). The fiber optic interface may include the necessary components (e.g., filters) to implement WDM, CWDM or DWDM functions.

On the receive side of the transceiver **100** as part of an implementation of RX **133** in an Optical Module **326**, light propagated across an ODN (not shown in FIG. **3**) travels over fibers **314***a*, **314***b* through a fiber optic interface (not shown) and is received by an optical detector, such as the photo diode (PD) **315***a*, **315***b*. In response, the PD **315***a*, **315***b* provides a photocurrent to the TransImpedance Amplifier (TIA) **316***a*, **316***b* that converts the photocurrent into an electrical voltage signal. The electrical voltage signal from the TIA **316***a*, **316***b* is then transmitted to a Linear Amplifier (LA) **317***a*, **317***b* as a differential signal or a single-ended signal **318***a*, **318***b*. The LA **317***a*, **317***b* performs signal conditioning on the received electrical voltage signal to provide increased resolution and system performance. The LA **317***a*, **317***b* provides an electrical signal **319***a*, **319***b* to a Clock Data Recovery (CDR) and Equalization (EQ) **320***a*, **320***b* block that recovers clock and data signals and performs equalization on the received data, which is then provided to a De-Mod & Inner Decoder **323***a*, **323***b*. The CDR & EQ **320***a*, **320***b* block may implement a blind equalization method or decision-directed equalization method. Blind equalization is discussed further below. Other equalization methods may be used, particularly those that aid the CDR. The De-Mod & Inner Decoder **323***a*, **323***b* block performs complementary de-modulation to the m-ary modulation performed in the MOD **309***a*, **309***b* block as well as a complementary decoding method to the coding method performed in the Inner Coder **308***a*, **308***b* block. In one implementation, De-Mod & Inner Decoder **323***a*, **323***b* includes a Viterbi decoder. Other decoding means may be

used. Received data is then provided to the outer decoder **324***a*, **324***b* block, which performs a complementary decode to the error detection and/or recovery method chosen in the outer coder **307***a*, **307***b* block. After demodulation and decoding, the received data is then provided to the Mux **325** block that performs a complementary function to the DeMux **306** block. The combined received data is then provided to the TC-Layer/MAC **305**. In implementations without Outer Coder **307***a*, **307***b* and Inner Coder **308***a*, **308***b* blocks, the output of the CDR & EQ **320***a*, **320***b* block is provided directly to the Mux **325** block.

The RX **133**,**136** and TX **134**,**135** circuitry of transceivers **100**,**101**, or portions thereof, for example, PD **315***a*, **315***b* and LA **317***a*, **317***b*, can be combined within industry standard optical modules. Common optical module standards are 300pin, XENPAK, X2, and XPAK transponders and XFP or SFP and SFP+ transceivers. These optical modules include unidirectional fiber links with one fiber link for transmit path and a second fiber link for the receive path. However, implementations of optical modules **326**, **401**, **501** incorporate a plurality of bi-directional fiber links for transmitting demultiplexed data on separate fiber links. Any of a variety of optical couplers may be used to separate and/or combine light propagating into or out of the fiber links. These optical modules **326**, **401**, **501** used herein can conform to a form factor of standard optical modules such as the 300pin, XENPAK, X2, XPAK, XFP or SFP and SFP+. Other form factors may also be used.

Alternatively, in other implementations of transceiver **100**, functions described above may be integrated into various different components. For example, in the implementation of transceiver **100** shown in FIG. **4**, various functions may be incorporated into optical module **401** such as: digital to analog conversion **310***a*, **310***b*; analog to digital conversion **321***a*, **321***b*; clock data recovery and equalization **320***a*, **320***b*; m-ary modulation **309***a*, **309***b*; m-ary de-modulation **323***a*, **323***b*; inner coder **308***a*, **308***b*; inner de-coder **323***a*, **323***b*; outer coder **307***a*, **307***b*; outer de-coder **324***a*, **324***b*, and the De-Mux **306** and Mux **325** functions that enable demultiplexing across multiple fibers. The optical module **401** may have an interface that can connect to existing TC-Layer or MAC implementations currently produced. In another alternative implementation the digital to analog conversion **310***a*, **310***b*; analog to digital conversion **321***a*, **321***b*, and the clock data recovery **320***a*, **320***b* functions are incorporated into an optical module (not shown). In yet another alternative implementation of the transceiver **100** as shown in FIG. **5**, an optical module **501** includes the De-Mux **306** and Mux **325** functions enabling demultiplexing across multiple fibers. The optical module **501** may have an interface that can connect to existing TC-Layer or MAC implementations currently produced.

Alternative implementations of transceiver **100** utilizing a single fiber link **314***a* (without demultiplexing across multiple fibers) are illustrated in FIG. **6A**-**6**B. Alternatively, an implementation of the transceiver **100** may utilize multiple fiber links **314***a*, **314***b* while not performing demultiplexing across multiple fibers, as illustrated in FIG. **7**. In this implementation, the TC-Layer/MAC **701** block manages the fiber links as independent fiber links that all connect to the same end point(s) on the network. In one implementation, TC-Layer/MAC **701** block is a derivative of the Transmission Convergence Layer specified in ITU G.984 or MAC specified in IEEE 802.3ah, with the added functionality of queue management of the traffic across the plurality of independent fiber links. The TC-Layer/MAC **701** block may exclude use of one or more fiber links if the fiber link experiences a failure. This exclusion of failed fiber links enables the TC-Layer/MAC **701** block (i.e., queue management function) to continue providing service across a PON using the remaining active links. Each fiber can be deployed across physically different paths to provide optical fiber distribution path diversity and improved protection against failures. Failures may originate in the optical module or across elements of the ODN such as fiber or connector breaks.

Channel Equalization

An implementation for a channel equalization routine executed in the CDR & EQ **320***a*, **320***b* block includes determining coefficient settings or weights that are applied to the received data to remove undesired information (e.g. intersymbol interference (ISI)) or noise from the received data and thereby increase the sensitivity, dynamic range of detecting signals and accuracy of receiving signals. Channel equalization can include a training or convergence period in which characteristics of the channel are learned or accounted for and coefficients, filter variables, or weights are adapted before or while processing the received data. Decision-directed equalization is an equalization method in which a known training sequence is sent during the training period and the receiver/transceiver uses the knowledge of the training sequence to learn about the channel characteristics. The training sequence can be multiplexed within a PON's TC-Layer framing protocol. Blind equalization is a process during which an unknown input data sequence is recovered from the output signal of an unknown channel (i.e., current equalization data for a given channel is unknown or otherwise unavailable). Other equalization methods may be used, digital signal processing methods, or methods that improve the accuracy of processing received data signals or improve the efficiency of processing received data signals (e.g., reducing data acquisition time, reducing power consumed) by saving or storing a first set of settings generated by processing data from a first ONU/ONT and then load previously saved second set of settings previously generated by processing data from a second ONU/ONT before processing another set of data from the second ONU/ONT.

One mode of communications used by a PON, e.g., for upstream data traffic (ONU/ONT to OLT direction), is "burst mode" communications. For example, upstream communications on a PON may include a link shared among multiple clients or ONUs/ONTs via time division multiplexing under control by an OLT. The upstream direction is divided into time slots; each time slot includes a defined number of bits. A given ONU/ONT is granted some number of time slots during which to transmit an upstream frame of data to an OLT. The upstream direction uses an orchestrated collection of bursts from the different ONU/ONTs, coordinated by the OLT that tries to maximize upstream traffic bandwidth efficiency by minimizing empty slots.

A flow chart for an exemplary upstream burst mode communication equalization process is shown in FIG. **8**A. To read or interpret the upstream data traffic from a client ONU/ONT, an OLT trains and/or equalizes the channel for that client ONU/ONT. Since the ONU/ONTs may be at different distances from the OLT and all do not share the same fiber, different channel characteristics result. Communication efficiencies may be obtained by determining **800** a set of equalization coefficients for a channel during a burst from a client, saving **801** the determined equalization coefficients, entering a wait period **802** (also known as a PON's silence period when no client ONU/ONTs are transmitting upstream), and loading **803** the stored equalization coefficients before a next burst from the client (during the wait

period), to avoid re-training or re-equalizing on every burst communication. The OLT has prior knowledge of which ONU/ONT will be transmitting data during which time slots and can use this knowledge during the time between burst communications (during the wait period) to load **803** an appropriate set of coefficients pertaining to the particular ONU/ONT transmitting prior to receiving **804** its next upstream burst. This process continues for subsequent bursts. In one implementation, periodic (though not coincident with each communication burst) updates to the channel characteristics may be made (and stored). The OLT can save **801** coefficients that have converged or have been trained after receiving burst communications from the first ONU/ONT and load **803** a new set of coefficients during the wait period between bursts (i.e., before an incoming upstream burst from a second ONU/ONT). In another exemplary implementation, the OLT can save or store **801** coefficients or settings during the wait period **802** between burst as shown in FIG. **8**B. In one implementation, in addition to or alternative to storage of coefficient data, the OLT may also save and load inner and/or outer coding states between bursts improving the efficiency of communication, similar to the equalization process of FIG. **8**A-**8**B. Other methods that improve the accuracy and efficiency of processing burst mode data from specific ONUs/ONTs may be used following a similar process.

Another mode of communications used by a PON, e.g., for downstream data traffic (OLT to ONU/ONT direction), is "continuous mode" communications. In one implementation, a receiver, such as an ONU/ONT, equalizes a received data channel using either one of a blind equalization or a decision directed equalization method.

A flow chart for an exemplary PON activation process is shown in FIG. **9**. In a PON in which a decision directed method is used for training an ONU/ONT receiver, a continuous mode transmitter, such as an OLT transmitter, sends a training sequence **900** multiplexed within a PON's TC-Layer downstream frame protocol. In a PON in which a blind equalization method is used, the OLT needed not send this training sequence **900**. An ONU/ONT equalizes its received downstream channel **901** before it is able to receive and interpret PON network parameters **902**. If the OLT has not been previously informed of the existence of the ONU/ONT then the ONU/ONT awaits an upstream grant window **903** available for new ONU/ONTs to respond to the OLT with its serial number **904**. After the ONU/ONT has received an upstream grant window and processed PON system parameters, the ONU/ONT sends a training sequence **905** and then its serial number **904** to the OLT. In a PON in which blind equalization is used the ONU/ONT need not send a training sequence **905**. After the OLT has received the ONU/ONT serial number the OLT will assign and send the ONU/ONT an identification number. If the ONU/ONT does not receive an identification number **906***a*, the ONU/ONT returns to waiting for an upstream grant window for new ONU/ONTs **903**. Once the ONU/ONT receives an identification number **906***b*, the OLT performs ranging **907** to determine the distance between the OLT and ONU/ONT and then compensates for the communication timing delays. The ONU/ONT can perform updates continuously or periodically depending on the equalization method employed. After the downstream continuous mode channel and the upstream burst mode channel have been equalized, both ends of the PON transmission link are equalized and the ONU/ONT enters its normal operating state **908**.

Link Connection Errors

A system has been proposed that includes demultiplexing across multiple fibers as is shown above with reference to FIGS. **3**-**6**. In systems using demultiplexing across multiple fibers, fibers can be connected incorrectly at installation. For example, a first transceiver **100**, such as is shown in FIG. **3**, with fibers **314***a* and **314***b* can be connected to a second transceiver **101** with fiber **314***b* connected in place of fiber **314***a*, and fiber **314***a* connected in place of fiber **314***b*. The incorrect connection in this example may cause the first and second transceivers to not establish communications due to misalignment of bits during multiplexing of received data.

Information in a frame is used to synchronize a receiver (e.g., transceiver **101**) with the beginning of a frame (e.g., a "frame delimiter"). The process of discovering the beginning of a frame is called "frame synchronization." In specific protocols such as G.984, the downstream frame delimiter is called Psync, the upstream frame delimiter is called Delimiter and the process of frame synchronization in the downstream is called the HUNT. In one implementation, TC-Layer/MAC **305** block performs frame synchronization. In one implementation, specific bit patterns or values for frame delimiters are used that are unique for each fiber to differentiate one fiber from another or the order of fiber connections to correctly multiplex received data. The use of unique frame delimiters allows the TC-Layer/MAC **305** block to change the alignment of received data bits during multiplexing to adjust for the order of the fiber connections, without having to physically change the connections. Management of the bit alignment in this implementation forms part of the TC-Layer/MAC's **305** block demultiplexing management responsibilities and functions.

Alternatively, the TC-Layer/MAC **305** block may assume an order for the fiber connections to determine the alignment of bits for multiplexing the received data and attempt frame synchronization. After a period of time with no frame synchronization success, the TC-Layer/MAC **305** block may assume a different order for the fiber connections and change the alignment of bits during multiplexing and attempt frame synchronization again. The process may repeat, including changing the alignment of bits to reflect other configurations during the multiplexing, and frame synchronization attempts continue until frame synchronization succeeds. In yet another alternative implementation, the TC-Layer/MAC **305** block may assume and attempt frame synchronization on all possible combinations of bit alignments in parallel, one of which will succeed in achieving frame synchronization.

Although the invention has been described in terms of particular implementations, one of ordinary skill in the art, in light of this teaching, can generate additional implementations and modifications without departing from the spirit of or exceeding the scope of the claimed invention. Accordingly, it is to be understood that the drawings and descriptions herein are proffered by way of example to facilitate comprehension of the invention and should not be construed to limit the scope thereof.

What is claimed is:

1. A pluggable optical transceiver module comprising of:

an electrical system interface for receiving a first electrical data signal and for transmitting a second electrical data signal, and

an encoder unit for coding the first electrical data signal according to an error correcting code to produce a first electrical encoded data signal, and

an m-ary modulator for increasing the number of bits per symbol in the first electrical encoded data signal to produce a first m-ary modulation signal, and

a digital to analog converter for converting the first m-ary modulation signal to a first electrical m-ary analog modulation signal, and

a driver for amplifying the first electrical m-ary analog modulation signal to an amplified first electrical m-ary analog modulation signal to drive an optical transmitter, and

the optical transmitter for emitting a first optical signal on a first wavelength responsive to and representative of the amplified first electrical m-ary analog modulation signal from the driver, and

an optical detector for receiving a second optical signal on a second wavelength and producing an electrical analog signal, and

an amplifier for amplifying the electrical analog signal to an amplified electrical analog signal, and

a clock data recovery unit for recovering clock and data information to produce a second m-ary modulation signal from the amplified electrical analog signal, and

an equalizer for performing equalization on the second m-ary modulation signal to remove noise, and

an m-ary demodulator for decreasing the number of bits per symbol in the equalized second m-ary modulation signal to produce a second electrical encoded data signal, and

a decoder unit for decoding the second electrical encoded data signal according to an error correcting code to produce the second electrical data signal.

2. The pluggable optical transceiver module of claim **1**, wherein the form factor of the pluggable optical transceiver module is a pluggable form factor standard.

3. The pluggable optical transceiver module of claim **2**, wherein the pluggable form factor standard of the pluggable optical transceiver module is a small form factor pluggable (SFP) or SFP+ form factor standard.

4. The pluggable optical transceiver module of claim **2**, wherein the pluggable form factor standard of the pluggable optical transceiver module is an XFP form factor standard.

5. The pluggable optical transceiver module of claim **1**, wherein the m-ary modulator and the m-ary demodulator perform m-ary pulse amplitude modulation and de-modulation, respectively, that uses two or more bits per symbol for communication.

6. The pluggable optical transceiver module of claim **1**, wherein the m-ary modulator and the m-ary demodulator perform m-ary quadrature amplitude modulation and de-modulation, respectively, that uses two or more bits per symbol for communication.

7. The pluggable optical transceiver module of claim **1**, wherein the m-ary modulator and the m-ary demodulator perform m-ary quadrature phase shift keying modulation and de-modulation, respectively, that uses two or more bits per symbol for communication.

8. The pluggable optical transceiver module of claim **1**, whereby the m-ary modulator and the m-ary demodulator perform orthogonal frequency division multiplexing modulation and de-modulation, respectively, that uses two or more bits per symbol for communication.

9. The pluggable optical transceiver module of claim **1**, wherein the electrical system interface includes parallel signals.

10. The pluggable optical transceiver module of claim **1**, wherein the electrical system interface includes serial signals.

11. The pluggable optical transceiver module of claim **1**, wherein the first electrical data signal and second electrical data signal includes parallel electrical data signals.

12. The pluggable optical transceiver module of claim **1**, wherein the first optical signal on a first wavelength is configured to emit into a first optical fiber and the second optical signal on a second wavelength is configured to be received from the first optical fiber.

13. The pluggable optical transceiver module of claim **1**, wherein the first optical signal on a first wavelength is configured to emit into a first optical fiber and the second optical signal on a second wavelength is configured to be received from a second optical fiber.

14. The pluggable optical transceiver module of claim **1**, wherein the equalizer includes coefficients or weights adapted to remove noise from the second m-ary modulation signal.

15. The pluggable optical transceiver module of claim **1**, wherein the noise removed by the equalizer includes inter-symbol interference (ISI).

16. The pluggable optical transceiver module of claim **1**, wherein the equalizer performs decision directed equalization on the second m-ary modulation signal to remove noise.

17. The pluggable optical transceiver module of claim **1**, wherein the equalizer performs blind equalization on the second m-ary modulation signal to remove noise.

18. The pluggable optical transceiver module of claim **1**, wherein the error correcting code includes a convolutional code.

19. The pluggable optical transceiver module of claim **1**, wherein the error correcting code includes a forward error correcting (FEC) code.

20. The pluggable optical transceiver module of claim **1**, wherein the error correcting code includes a Reed-Solomon code.

21. The pluggable optical transceiver module of claim **1**, wherein the electrical system interface includes receiving a third electrical data signal and transmitting a forth electrical data signal and the pluggable optical transceiver module further includes:

a second encoder unit for coding the third electrical data signal according to an error correcting code to produce a third electrical encoded data signal, and

a second m-ary modulator for increasing the number of bits per symbol in the third electrical encoded data signal to produce a third m-ary modulation signal, and

a second digital to analog converter for converting the third m-ary modulation signal to a second electrical m-ary analog modulation signal, and

a second driver for amplifying the second electrical m-ary analog modulation signal to an amplified second electrical m-ary analog modulation signal to drive a second optical transmitter, and

the second optical transmitter for emitting a third optical signal on a third wavelength responsive to and representative of the amplified second electrical m-ary analog modulation signal from the second driver, and

a second optical detector for receiving a forth optical signal on a forth wavelength and producing a second electrical analog signal, and

a second amplifier for amplifying the second electrical analog signal to an amplified second electrical analog signal, and

a second clock data recovery unit for recovering clock and data information to produce a forth m-ary modulation signal from the amplified second electrical analog signal, and

a second equalizer for performing equalization on the forth m-ary modulation signal to remove noise, and

a second m-ary demodulator for decreasing the number of bits per symbol in the equalized forth m-ary modulation signal to produce a forth electrical encoded data signal, and

a second decoder unit for decoding the forth electrical encoded data signal according to an error correcting code to produce the forth electrical data signal.

22. The pluggable optical transceiver module of claim **21**, wherein the third optical signal on a third wavelength is configured to emit into a first optical fiber and the forth optical signal on a forth wavelength is configured to be received from the first optical fiber.

23. The pluggable optical transceiver module of claim **21**, wherein the third optical signal on a third wavelength is configured to emit into a first optical fiber and the forth optical signal on a forth wavelength is configured to be received from a second optical fiber.

* * * * *