AO 120 (Rev. 08/10)

TO:	Mail Stop 8 Director of the U.S. Patent and Trademark Office P.O. Box 1450 Alexandria, VA 22313-1450	REPORT ON THE FILING OR DETERMINATION OF AN ACTION REGARDING A PATENT OR TRADEMARK

In Compliance with 35 U.S.C. § 290 and/or 15 U.S.C. § 1116 you are hereby advised that a court action has been filed in the U.S. District Court Eastern District of Texas on the following

☐ Trademarks or ☑ Patents. (☐ the patent action involves 35 U.S.C. § 292.):

DOCKET NO.	DATE FILED	U.S. DISTRICT COURT
2:22-cv-00309	8/9/2022	Eastern District of Texas

PLAINTIFF	DEFENDANT
NEXTGEN INNOVATIONS, LLC	NOKIA OF AMERICA CORPORATION, ET AL.

	PATENT OR TRADEMARK NO.	DATE OF PATENT OR TRADEMARK	HOLDER OF PATENT OR TRADEMARK
1	8,238,754	8/7/2012	NextGen Innovations, LLC
2	9,887,795	2/6/2018	NextGen Innovations, LLC
3	10,263,723	4/16/2019	NextGen Innovations, LLC
4	10,771,181	9/8/2020	NextGen Innovations, LLC
5			

In the above—entitled case, the following patent(s)/ trademark(s) have been included:

DATE INCLUDED	INCLUDED BY ☐ Amendment ☐ Answer ☐ Cross Bill ☐ Other Pleading	
PATENT OR TRADEMARK NO.	DATE OF PATENT OR TRADEMARK	HOLDER OF PATENT OR TRADEMARK
1		
2		
3		
4		
5		

In the above—entitled case, the following decision has been rendered or judgement issued:

DECISION/JUDGEMENT

CLERK	(BY) DEPUTY CLERK	DATE

Copy 1—Upon initiation of action, mail this copy to Director **Copy 3—Upon termination of action, mail this copy to Director**
Copy 2—Upon filing document adding patent(s), mail this copy to Director **Copy 4—Case file copy**

Print Save As... Reset

AO 120 (Rev. 08/10)

TO:	Mail Stop 8 Director of the U.S. Patent and Trademark Office P.O. Box 1450 Alexandria, VA 22313-1450	REPORT ON THE FILING OR DETERMINATION OF AN ACTION REGARDING A PATENT OR TRADEMARK

In Compliance with 35 U.S.C. § 290 and/or 15 U.S.C. § 1116 you are hereby advised that a court action has been filed in the U.S. District Court Eastern District of Texas on the following

☐ Trademarks or ☑ Patents. (☐ the patent action involves 35 U.S.C. § 292.):

DOCKET NO.	DATE FILED	U.S. DISTRICT COURT
2:22-cv-00308	8/9/2022	Eastern District of Texas

PLAINTIFF	DEFENDANT
NEXTGEN INNOVATIONS, LLC	AT&T SERVICES, INC. AND AT&T CORP.

	PATENT OR TRADEMARK NO.	DATE OF PATENT OR TRADEMARK	HOLDER OF PATENT OR TRADEMARK
1	9,887,795	2/6/2018	NextGen Innovations, LLC
2	10,263,723	4/16/2019	NextGen Innovations, LLC
3	10,771,181	9/8/2020	NextGen Innovations, LLC
4	8,374,508	2/2/2013	NextGen Innovations, LLC
5			

In the above—entitled case, the following patent(s)/ trademark(s) have been included:

DATE INCLUDED	INCLUDED BY ☐ Amendment ☐ Answer ☐ Cross Bill ☐ Other Pleading	
PATENT OR TRADEMARK NO.	DATE OF PATENT OR TRADEMARK	HOLDER OF PATENT OR TRADEMARK
1		
2		
3		
4		
5		

In the above—entitled case, the following decision has been rendered or judgement issued:

DECISION/JUDGEMENT

CLERK	(BY) DEPUTY CLERK	DATE

Copy 1—Upon initiation of action, mail this copy to Director **Copy 3—Upon termination of action, mail this copy to Director**
Copy 2—Upon filing document adding patent(s), mail this copy to Director **Copy 4—Case file copy**

Print Save As... Reset

AO 120 (Rev. 08/10)

TO:	Mail Stop 8 Director of the U.S. Patent and Trademark Office P.O. Box 1450 Alexandria, VA 22313-1450	REPORT ON THE FILING OR DETERMINATION OF AN ACTION REGARDING A PATENT OR TRADEMARK

In Compliance with 35 U.S.C. § 290 and/or 15 U.S.C. § 1116 you are hereby advised that a court action has been filed in the U.S. District Court Eastern District of Texas on the following

☐ Trademarks or ☑ Patents. (☐ the patent action involves 35 U.S.C. § 292.):

DOCKET NO.	DATE FILED	U.S. DISTRICT COURT
2:22-cv-00307	8/9/2022	Eastern District of Texas

PLAINTIFF	DEFENDANT
NEXTGEN INNOVATIONS, LLC	FUJITSU NETWORK COMMUNICATIONS, INC., ET AL.

PATENT OR TRADEMARK NO.	DATE OF PATENT OR TRADEMARK	HOLDER OF PATENT OR TRADEMARK
1 8,238,754	8/7/2012	NextGen Innovations, LLC
2 9,887,795	2/6/2018	NextGen Innovations, LLC
3 10,263,723	4/16/2019	NextGen Innovations, LLC
4 10,771,181	9/8/2020	NextGen Innovations, LLC
5		

In the above—entitled case, the following patent(s)/ trademark(s) have been included:

DATE INCLUDED	INCLUDED BY ☐ Amendment ☐ Answer ☐ Cross Bill ☐ Other Pleading	
PATENT OR TRADEMARK NO.	DATE OF PATENT OR TRADEMARK	HOLDER OF PATENT OR TRADEMARK
1		
2		
3		
4		
5		

In the above—entitled case, the following decision has been rendered or judgement issued:

DECISION/JUDGEMENT

CLERK	(BY) DEPUTY CLERK	DATE

Copy 1—Upon initiation of action, mail this copy to Director **Copy 3—Upon termination of action, mail this copy to Director**
Copy 2—Upon filing document adding patent(s), mail this copy to Director **Copy 4—Case file copy**

Print Save As... Reset

AO 120 (Rev. 08/10)

TO:	Mail Stop 8 Director of the U.S. Patent and Trademark Office P.O. Box 1450 Alexandria, VA 22313-1450	REPORT ON THE FILING OR DETERMINATION OF AN ACTION REGARDING A PATENT OR TRADEMARK

In Compliance with 35 U.S.C. § 290 and/or 15 U.S.C. § 1116 you are hereby advised that a court action has been filed in the U.S. District Court Eastern District of Texas on the following

☐ Trademarks or ☑ Patents. (☐ the patent action involves 35 U.S.C. § 292.):

DOCKET NO.	DATE FILED	U.S. DISTRICT COURT
2:22-cv-00306	8/9/2022	Eastern District of Texas

PLAINTIFF	DEFENDANT
NEXTGEN INNOVATIONS, LLC	INFINERA CORPORATION

PATENT OR TRADEMARK NO.	DATE OF PATENT OR TRADEMARK	HOLDER OF PATENT OR TRADEMARK
1 9,887,795	2/6/2018	NextGen Innovations, LLC
2 10,263,723	4/16/2019	NextGen Innovations, LLC
3 10,771,181	9/8/2020	NextGen Innovations, LLC
4		
5		

In the above—entitled case, the following patent(s)/ trademark(s) have been included:

DATE INCLUDED	INCLUDED BY ☐ Amendment ☐ Answer ☐ Cross Bill ☐ Other Pleading	
PATENT OR TRADEMARK NO.	DATE OF PATENT OR TRADEMARK	HOLDER OF PATENT OR TRADEMARK
1		
2		
3		
4		
5		

In the above—entitled case, the following decision has been rendered or judgement issued:

DECISION/JUDGEMENT

CLERK	(BY) DEPUTY CLERK	DATE

Copy 1—Upon initiation of action, mail this copy to Director **Copy 3—Upon termination of action, mail this copy to Director**
Copy 2—Upon filing document adding patent(s), mail this copy to Director **Copy 4—Case file copy**

Print Save As... Reset

Trials@uspto.gov
571-272-7822

Paper 10
Entered: February 15, 2022

UNITED STATES PATENT AND TRADEMARK OFFICE

BEFORE THE PATENT TRIAL AND APPEAL BOARD

II-VI, INC.,
Petitioner,

v.

ALEXANDER SOTO AND WALTER SOTO,
Patent Owner.

IPR2021-01359
Patent 10,263,723 B2

Before PATRICK M. BOUCHER, GARTH D. BAER, and KARA L. SZPONDOWSKI, *Administrative Patent Judges*.

BOUCHER, *Administrative Patent Judge*.

DECISION
Denying Institution of *Inter Partes* Review
35 U.S.C. § 314(a)

II-VI, Inc. ("Petitioner") filed a Petition pursuant to 35 U.S.C. §§ 311–319 to institute an *inter partes* review of claims 1–11 and 13–23 of U.S. Patent No. 10,263,723 B2 (Ex. 1001, "the '723 patent"). Paper 1

("Pet."). Alexander Soto and Walter Soto (collectively, "Patent Owner") filed a Preliminary Response. Paper 9 ("Prelim. Resp.").

We have jurisdiction under 35 U.S.C. § 314 and 37 C.F.R. § 42.4. For the reasons set forth below, we exercise our discretion under 35 U.S.C. § 325(d) and decline to institute an *inter partes* review.

I. BACKGROUND

A. The '723 Patent

1. Overview

The '723 patent "relates to optical fiber communications," and describes several embodiments of optical transceiver modules. Ex. 1001, 1:26–28; 8:65–11:11. One such embodiment is illustrated in Figure 3 of the '723 patent, which is reproduced below.

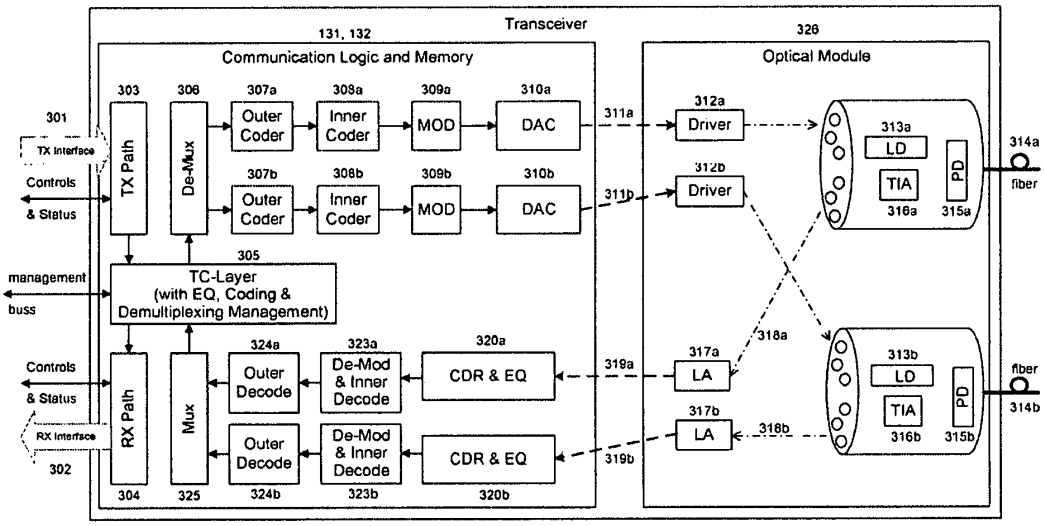

FIG. 3

Figure 3 shows a system block diagram for an implementation of a transceiver with components for transmit-side processing generally in the upper half of the diagram and components for receive-side processing

generally in the lower half. *Id.* at 8:65–66, 9:9–13. On the transmit side, signals are received from transmit ("TX") interface 301 and prepared for data transmission by TX path block 303 and transmission convergence layer or media access control ("TC-Layer/MAC") block 305. *Id.* at 9:9–36. Optionally, DeMux block 306 may split the transmitting data into a plurality of paths (two of which are shown in Figure 3), for demultiplexing data across multiple fibers. *Id.* at 9:36–47.

In a transmit path, transmit data may be provided to outer and inner coder blocks 307, 308 to perform error-correction coding, Reed-Solomon coding, trellis coding, and the like, as appropriate to the application. *Id.* at 9:52–61. Modulation block 309 performs any of a variety of m-ary modulation methods to increase the number of bits per symbol transmitted. *Id.* at 10:11–22. Digital-to-analog converter ("DAC") 310 converts the m-ary modulated signal to an analog signal that is processed by laser driver 312, which drives an optical transmitter such as laser diode 313 to transmit an optical signal over fiber 314. *Id.* at 10:27–37.

The receive side of the transceiver includes components that generally implement inverse functions of the transmit side. *See id.* at 10:38–11:11. Photodiode ("PD") 315 detects a received optical signal and converts it to an electrical signal that is amplified by transimpedance amplifier ("TIA") 316 and linear amplifier ("LA") 317, which may also perform signal conditioning. *Id.* at 10:38–51. The electrical signal is processed by clock data recovery ("CDR") and equalization ("EQ") block 320 to recover clock and data signals. *Id.* at 10:51–56. De-Mod & inner decoder block 323 performs complementary demodulation to the m-ary modulation performed by modulation block 309, and, in combination with outer decoder block 324,

decodes for error correction and other coding that may have been applied. *Id.* at 10:56–11:4. Optional multiplexer 325 may be applied to multiple signals on the receive side to provide a single signal that is output through RX path 304 and RX interface 302. *Id.* at 11:4–11.

As illustrated in Figure 3, certain components that include laser driver 312 and linear amplifier 317, as well as laser diode 313, photodiode 315, and transimpedance amplifier 316 on both the transmit and receive side may be embodied in optical module 326. *See id.* at 10:27–51. Optical module 326 "can conform to a form factor of standard optical modules such as the 300pin, XENPAK, X2, XPAK, XFP or SFP and SFP+." *Id.* at 11:25–27.

2. *Illustrative Claim*

Independent claim 1 (the '723 patent's only independent claim) is illustrative of the challenged claims and is reproduced below.

> 1. A pluggable optical transceiver module comprising of:
> an electrical system interface for receiving a first electrical data signal and for transmitting a second electrical data signal, and
> an encoder unit for coding the first electrical data signal according to an error correcting code to produce a first electrical encoded data signal, and
> an m-ary modulator for increasing the number of bits per symbol in the first electrical encoded data signal to produce a first m-ary modulation signal, and
> a digital to analog converter for converting the first m-ary modulation signal to a first electrical m-ary analog modulation signal, and
> a driver for amplifying the first electrical m-ary analog modulation signal to an amplified first electrical m-ary analog modulation signal to drive an optical transmitter, and
> the optical transmitting for emitting a first optical signal on a first wavelength responsive to and representative of the

> amplified first electrical m-ary analog modulation signal from the driver, and
>
> an optical detector for receiving a second optical signal on a second wavelength and producing an electrical analog signal, and
>
> an amplifier for amplifying the electrical analog signal to an amplified electrical analog signal, and
>
> a clock data recovery unit for recovering clock and data information to produce a second m-ary modulation signal from the amplified electrical analog signal, and
>
> an equalizer for performing equalization on the second m-ary modulation signal to remove noise, and
>
> an m-ary demodulator for decreasing the number of bits per symbol in the equalized second m-ary modulation signal to produce a second electrical encoded data signal, and
>
> a decoder unit for decoding the second electrical encoded data signal according to an error correcting code to produce the second electrical data signal.

Ex. 1001, 14:58–15:28.

3. *Prosecution History*

The '723 patent is a continuation of U.S. Patent No. 9,887,795 B2 ("the parent patent"),[1] and claims the benefit of the filing date of the parent patent as well as the filing dates of other utility and provisional applications. Ex. 1001, codes (60), (63). The application that matured into the '723 patent was allowed in a first-action allowance, with the Examiner providing the following statement of reasons for allowance: "the prior art fails to teach each of the recited elements of claim 1 within a unitary pluggable optical

[1] Petitioner challenges claims 1–21 of the parent patent in concurrently filed IPR2021-01358.

Exhibit 1002
Infinera Corporation v. Alexander Soto and Walter Soto
Page 009

transceiver with a priority date before 2003." Ex. 1003, 13. In addition, the Examiner provided the following remarks regarding the prior art:

> The closest prior art identified by Examiner is Applicant's own work and the parent of the instant application, e.g. 15/095,137 now patent 9,887,795. However, the instant application is more specific than the parent application in that it recites the inclusion of error correcting code, an encoder unit tasked with coding the data signal error correction code, and digital to analog conversion of the modulation signal. Furthermore, the parent application is directed to the method of use of the pluggable optical transceiver whereas the instant application is directed to the pluggable optical transceiver apparatus.

Id.

Notably, the application that matured into the parent patent was examined by the same Examiner. *Compare* Ex. 1001 (identifying the Examiner of the '723 patent), *with* Ex. 1009 (identifying the same Examiner for the parent patent). Unlike the '723 patent, the parent patent was subject to multiple prior-art rejections during prosecution, summarized below. Independent claim 1 of the parent patent was initially presented by the Applicant in the following form:

> 1. A method for m-ary modulation communication across an optical network by an optical transceiver module comprising of:
> receiving a first electrical binary data signal through a system interface of the optical transceiver module;
> converting the first electrical binary data signal in the optical transceiver module to a first electrical m-ary modulation signal;
> amplifying the first electrical m-ary modulation signal to drive an optical transmitter of the optical transceiver module;
> emitting a first optical signal on a first wavelength responsive to and representative of the amplified first electrical m-ary modulation signal from the optical transmitter of the optical transceiver module;

> receiving a second optical signal on a second wavelength and producing an electrical signal from an optical detector of the optical transceiver module;
>
> amplifying the electrical signal to facilitate clock and data recovery in the optical transceiver module;
>
> equalizing the amplified electrical signal and recovering clock data information to produce a second m-ary modulation signal in the optical transceiver module;
>
> demodulating the second m-ary modulation signal according to a second electrical binary signal; and
>
> transmitting the second electrical binary signal through the system interface of the optical transceiver module.

Ex. 1008, 23. This claim was rejected in a first Office Action as anticipated by U.S. Patent No. 6,603,822 B2 ("Brede"). *Id.* at 89–91. The first Office Action was made final because the application that matured into the parent patent was itself a continuation of an earlier application, and "[a]ll claims [we]re drawn to the same invention claimed in the earlier application and could have been finally rejected on the grounds and art of record in the next Office Action if they had been entered in the earlier application." *Id.* at 93.

With a Request for Continued Examination, the Applicant amended the claims, particularly by amending independent claim 1 to recite a "pluggable" optical transceiver module. *Id.* at 105. Specifically, indicating added material with underline and deleted material with strikethrough, independent claim 1 of the parent patent was amended as follows:

> 1. A method for m-ary modulation communication ~~across an optical network~~ by a~~n~~ <u>pluggable</u> optical transceiver module comprising of:
>
> receiving a first electrical binary data signal through a system interface of the <u>pluggable</u> optical transceiver module;
>
> converting the first electrical binary data signal in the <u>pluggable</u> optical transceiver module to a first electrical m-ary modulation signal;

Exhibit 1002
Infinera Corporation v. Alexander Soto and Walter Soto
Page 011

> amplifying the first electrical m-ary modulation signal to drive an optical transmitter ~~of~~ in the pluggable optical transceiver module;
>
> emitting a first optical signal on a first wavelength responsive to and representative of the amplified first electrical m-ary modulation signal from the optical transmitter ~~of~~ in the pluggable optical transceiver module;
>
> receiving a second optical signal on a second wavelength and producing an electrical signal from an optical detector ~~of~~ in the pluggable optical transceiver module;
>
> amplifying the electrical signal to facilitate clock and data recovery in the pluggable optical transceiver module;
>
> ~~equalizing the amplified electrical signal and~~ recovering a clock data information from the amplified electrical signal to produce a second m-ary modulation signal in the pluggable optical transceiver module;
>
> demodulating the second m-ary modulation signal ~~according~~ to a second electrical binary data signal in the pluggable optical transceiver module; and
>
> transmitting the second electrical binary data signal through the system interface of the pluggable optical transceiver module.

Id. The Examiner also initially rejected this form of independent claim 1 in a nonfinal Office Action,

> contend[ing] that the optical transceiver of Figure 3 [of Brede] is 'pluggable' when that term is given its broadest reasonable interpretation being that the transceiver of Figure 3 will be plugged in to the network at a central office via the electrical interfaces shown in Figure 3. A similarly broad interpretation of the term 'pluggable' is met by Brede's disclosure in that at some point the optical transceiver of Figure 3 will be required to be plugged in to another element for power and data input/output.

Id. at 140. The Applicant then "argued that the 'pluggable' interpretation by the Examiner on the entirety of Brede's Fig. 3 is flawed." *Id.* at 185–188.

In particular, the Applicant argued that the Examiner had applied the broadest *possible* interpretation rather than the broadest *reasonable* interpretation, which the Applicant contended "could be [Brede's] optical transmitter 14 and optical receiver 16 elements combined somehow as an optical transceiver that is pluggable via pluggable coaxial lines 22, 28 to the host data terminal (HDT) 12." *Id.* at 187–188.

Although the prosecution of independent claim 1, as well as other claims of the parent patent, addressed anticipation over Brede, further aspects of the prosecution considered obviousness over Brede in combination with other references. In particular, claim 2 depended from claim 1 and originally recited that "the form factor of the optical transceiver module is selected from the group consisting of: SFP; SFP+; XFP; X2; XENPAK; XPA; and 300 pin transceiver form factors." *Id.* at 23. The Examiner rejected this claim for obviousness over Brede and U.S. Patent Publ. No. 2007/0031153 A1 ("Aronson"), asserting that Aronson evidenced that "these types of form factors are well known in the art" and that "[o]ne skilled in the art would have been motivated to utilize any of the claimed form factors in order to meet design requirements, budgetary requirements, or performance requirements such as achieving 10 Gb/s." *Id.* at 92–93.

The Applicant amended claim 2 to recite the more generalized limitation that "the form factor of the <u>pluggable</u> optical transceiver module is <u>a pluggable form factor standard</u> ~~selected from the group consisting of: SFP; SFP+; XFP; X2; XENPAK; XPA; and 300 pin transceiver form factors~~." *Id.* at 106. The Examiner also rejected this form of the claim, this time for obviousness over Brede and U.S. Patent No. 7,729,617 B2 ("Sheth"), which the Examiner cited as evidence that "standardized pluggable form factors are

well known in the art." *Id.* at 137–138. The Applicant argued that the Examiner failed sufficiently to establish a motivation to combine the references. *Id.* at 188–189.

Following these arguments by the Applicant, the Examiner allowed the application. *Id.* at 207 (Notice of Allowability). The Examiner did not provide any express reasons for allowance in the Notice of Allowability. *Id.*

B. Evidence

Petitioner relies on the following references:

Agazzi	US 2002/0012152 A1	Jan. 31, 2002	Ex. 1004
Raghavan	US 2003/0112896 A1	June 19, 2003	Ex. 1005
Brede	US 6,603,822 B2	Aug. 5, 2003	Ex. 1006
Richard	US 2003/0118273 A1	June 26, 2003	Ex. 1012
Halgren	US 2004/0052528 A1	Mar. 18, 2004	Ex. 1019
Koh	US 7,103,279 B1	Sep. 5, 2006	Ex. 1022
Feher	US 6,757,334 B1	June 29, 2004	Ex. 1024

In addition, Petitioner relies on a Declaration of Jack Winters, Ph.D. Ex. 1002.

C. Asserted Grounds of Unpatentability

Petitioner challenges claims 1–11 and 13–23 on the following grounds. Pet. 12.

Claim(s) Challenged	35 U.S.C. §[2]	References
1–11, 13–16, 18–23	103	Raghavan, Richard
7	103	Raghavan, Richard, Koh
17	103	Raghavan, Richard, Feher
1–11, 13–15, 18, 19, 21–23	103	Agazzi, Richard
7	103	Agazzi, Richard, Koh
17	103	Agazzi, Richard, Feher
1–3, 5–8, 13–15, 19–23	103	Brede, Halgren
17	103	Brede, Halgren, Feher

E. Real Parties in Interest

In addition to itself, Petitioner identifies Finisar Corporation as a real party in interest. Pet. v. Patent Owner identifies Alexander Soto and Walter Soto as real parties in interest, as well as NextGen Innovations, LLC, the exclusive licensee of the '723 patent. Paper 7, 1.

F. Related Matters

Both parties identify *NextGen Innovations, LLC v. II-VI, Inc.*, No. 4:20-cv-00854 (E.D. Tex.) as a related matter involving the '723 patent. Pet. vi; Paper 7, 1. This Texas litigation was transferred to the Northern District of California on July 2, 2021, and assigned No. 5:21-cv-07477. *See* Paper 8, 1.

[2] The Leahy-Smith America Invents Act ("AIA"), Pub. L. No. 112-29, 125 Stat. 284, 287–88 (2011), amended various provisions of 35 U.S.C. Petitioner asserts that "[t]he pre-AIA versions of §§ 102-103 apply" in this proceeding, and Patent Owner does not contest otherwise. Pet. 10. On the record before us, we agree with Petitioner's assertion and apply the pre-AIA versions of 35 U.S.C. §§ 102 and 103 herein.

Petitioner has also challenged patents owned by Patent Owner in IPR2021-01358, IPR2021-01361, IPR2021-01494, and IPR2021-01495. *See id.* at 2.

G. Overview of Asserted Prior Art

1. Agazzi

Agazzi "is directed to receivers," including optical receivers that use digital signal processing ("DSP"). Ex. 1004 ¶ 3. Figure 1B of Agazzi is reproduced below.

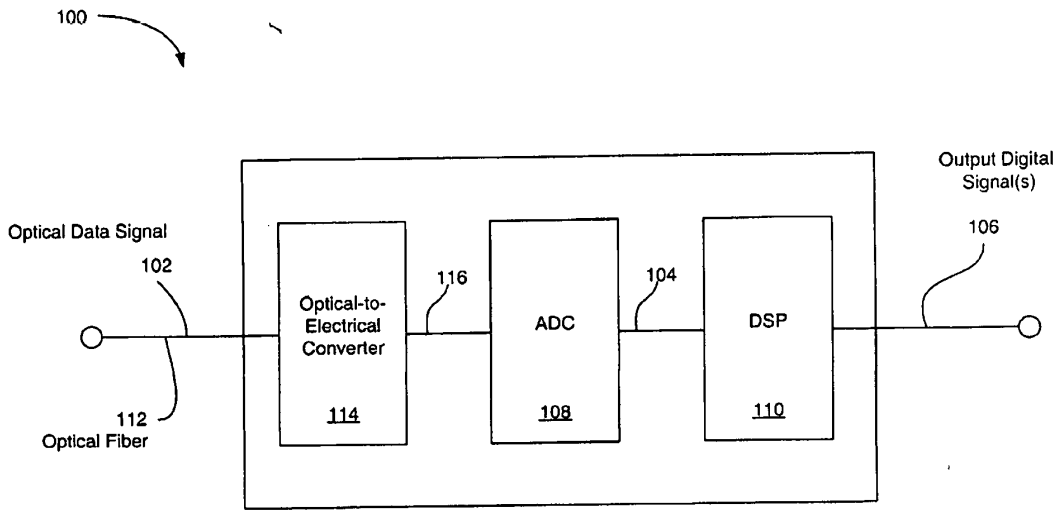

FIG. 1B

Figure 1B is a block diagram that illustrates optical DSP-based receiver 100. *Id.* ¶ 94. Optical data signal 102 is received over optical fiber 112 and provided to optical-to-electrical converter 114 to render electrical representation 116. *Id.* This analog signal is converted to a digital signal by analog-to-digital converter 108, thereby producing internal digital signal

104. *Id.* ¶¶ 89, 94. The digital signal is processed by digital signal processor 110, which performs such functions as "equalization, error correction . . . , timing recovery, automatic gain control, and offset compensation" to produce output digital signal 106. *Id.* ¶¶ 94, 96. In some instances, multiplexing is used so that a "plurality of optical signals is wave-division-multiplexed ('WDM') and transmitted through an optic fiber by modulating (e.g., intensity modulating) each signal at a different wavelength." *Id.* ¶ 99.

2. Raghavan

Raghavan describes a data transmission system "that allows very high data transmission rates over a data bus," and which "includes a transmitter system and a receiver system coupled through a transmission medium." Ex. 1005 ¶ 14. The transmitter system "receives parallel data having N bits and separates the N bits into (K+1) subsets for transmission into the base band and K frequency separated channels on the transmission medium." *Id.* The receiver system "receives the data from the base band and the K frequency separated channels from the transmission medium and recovers the N parallel bits of data." *Id.*

Figure 2A of Raghavan is reproduced below.

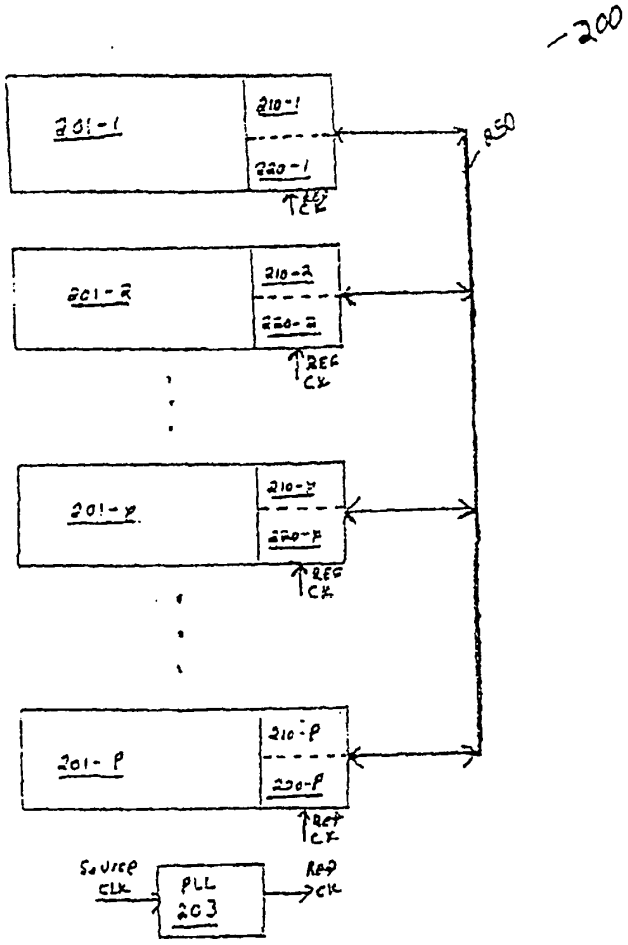

Fig. 2A

Figure 2A is a block diagram of a data transmission system taught by Raghavan. *Id.* ¶ 55. System 200 includes components 201-1 to 201-P, which may be interconnected cards, cabinets, or chips, each 201-p of which transmits or receives data across transmission channel 250 using transmitter system 210-P and receiver system 220-P. *Id.* ¶¶ 55, 56, 58. Transmitter systems 210 and receiver systems 220 may be implemented as a transceiver formed on a single semiconductor chip. *Id.* ¶ 226.

3. Brede

Brede describes a communication system "designed to deliver residential and business telecommunication services over a hybrid fiber-coaxial (HFC) distribution network." Ex. 1006, 18:9–12. Figure 1 of Brede is reproduced below.

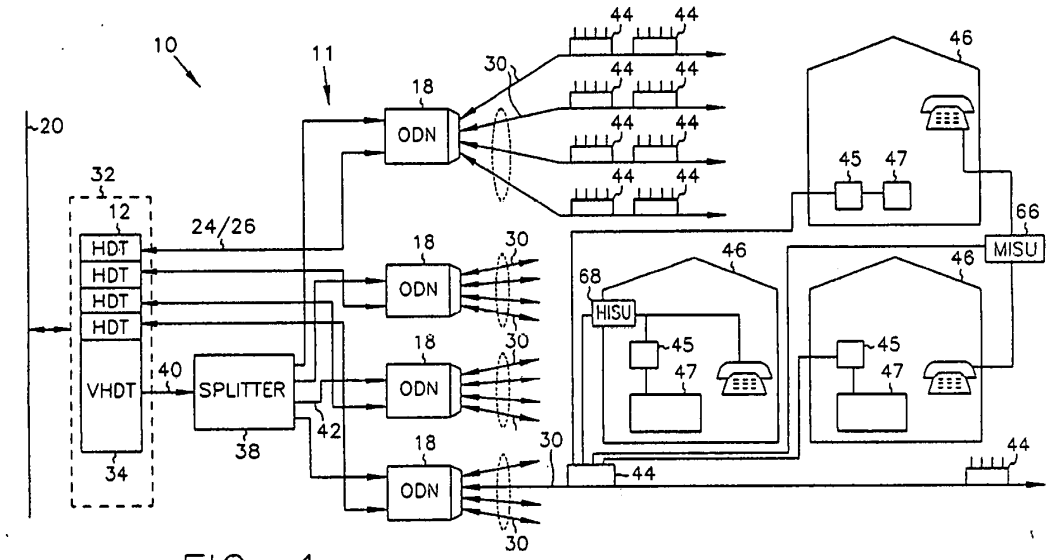

FIG. 1

Figure 1 is a block diagram illustrating communication system 10, in which HFC distribution network 11 uses optical fiber feeder lines to deliver signals to optical distribution nodes ("ODNs") 18 from head end 32. *Id.* at 18:19–23. Various modulation schemes may be supported by head end 32, including quadrature phase shift keying ("QPSK") and quadrature amplitude modulation ("QAM"). *Id.* at 120:42–53. Host digital terminals ("HDTs") 12, normally located at head end 32, interface with trunk line 20 and communicate over optical feeder lines 24/26 with ODNs 18. *Id.* at 18:49–66, 19:15–33. Optical signals are converted by ODNs 18 "for

transmission as electrical outputs" over the coaxial portion of the HFC distribution network to remote units 46. *Id.* at 20:44–48.

Figure 3 of Brede is reproduced below.

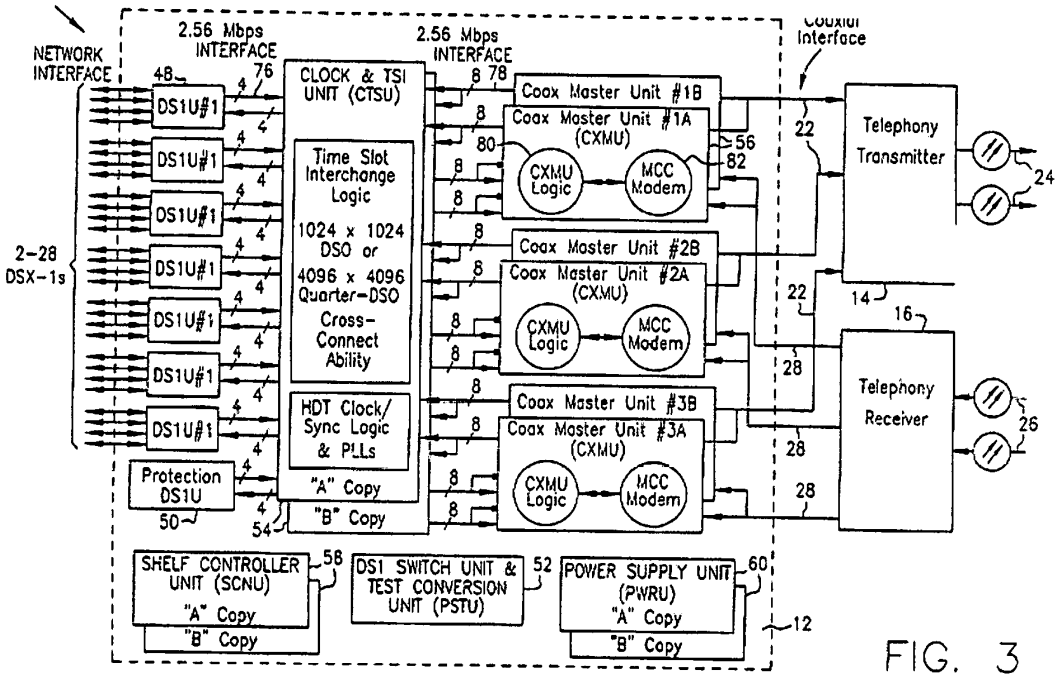

FIG. 3

24 and 16 and coaxial distribution legs 30" and "combines downstream video and telephony onto coaxial distribution legs 30." *Id.* at 19:27–31.

4. *Richard*

Richard describes an "optical alignment element" ("OAE") that can be used to compensate for cumulative alignment errors in an optical beam path. Ex. 1012 ¶ 12. "The OAE allows the optical elements in a device, other than the OAE, to be placed and fixed in place without substantially compensating for optical alignment errors," with the OAE then "inserted into the beam path and adjusted." *Id.* The OAE may be part of an optical multiplexer or demultiplexer, with Richard noting that a compact form factor may be used for such a device. *Id.* ¶¶ 12–13. "The form factor may be a standard form factor typically used for a pluggable communications module which interfaces between serial transmission media and a host socket." *Id.* ¶ 13. Examples of such form factors "include the GBIC form factor, the small form factor (SFF) and the small form pluggable (SFP) form factor." *Id.*

5. *Halgren*

Halgren describes an "electro-optic interface structure for use in a multi-protocol [optical-to-electrical-to-optical wavelength division multiplexing] network." Ex. 1019 ¶ 18. The structure "can be implemented using e.g. Small Form factor Pluggable (SFP) tributary interface optical fib[er] transceivers fitted to a client interface card or module." *Id.* ¶ 69.

6. Koh

Koh discloses "a microwave subsystem that includes an electrical converter for converting a received optical signal containing a high data rate signal." Ex. 1022, 1:40–42. "A clock and data recovery circuit is used for recovering the high data rate signal from the converted electrical signal." *Id.* at 1:42–44.

7. Feher

Feher describes implementations of QPSK transceivers. *See* Ex. 1024, 6:50–54. Such implementations may include a "blind equalizer." *Id.* at 35:46–52.

II. DISCRETION UNDER 35 U.S.C. § 325(d)

Patent Owner asks that we exercise the Director's discretion under 35 U.S.C. § 325(d) to deny the Petition. *See* Prelim. Resp. 11–38. The Director has delegated that discretion to the Board. 37 C.F.R. § 42.4(a).

"In determining whether to institute or order [an *inter partes* review], the Director may take into account whether, and reject the petition or request because, the same or substantially the same prior art or arguments previously were presented to the Office." 35 U.S.C. § 325(d). Although the prosecution history of the '723 patent itself is limited because the underlying application was allowed on a first action, Patent Owner contends that "[i]t is well-established that institution can be denied if the same or substantially the same art or arguments were presented during the prosecution of a related application." Prelim. Resp. 11 (citing *Cultec, Inc. v. StormTech LLC*, IPR2017-00777, Paper 7 at 9, 11 (PTAB Aug. 22, 2017) (informative)).

Petitioner also appears, at least implicitly, to agree that the prosecution history of the parent patent is relevant to our consideration of § 325(d). *See* Pet. 6–10 (discussing prosecution history of the parent patent in summarizing the prosecution history of the '723 patent), 13 (discussing discretionary denial under § 325(d)). The '723 patent is a continuation of the parent patent, thereby derived from a common initial application, and we agree that the prosecution history of the parent patent may legitimately bear on our assessment. *See generally Elkay Mfg. Co. v. Ebco Mfg. Co.*, 192 F.3d 973, 980 (Fed. Cir. 1999) ("When multiple patents derive from the same initial application, the prosecution history regarding a claim limitation in any patent that has issued applies with equal force to subsequently issued patents that contain the same claim limitation.").

Patent Owner further addresses this relevance by noting that "[t]he claims of the 723 Patent are apparatus claims directed to an optical transceiver module with specific elements" and that the claims of the '723 patent "are very similar to the [parent patent's] method claims directed to an optical transceiver module performing specified operations." Prelim. Resp. 11. Indeed, Patent Owner provides a claim chart comparing claim 1 of the '723 patent with claim 1 of the parent patent to illustrate the similarity of multiple limitations. *Id.* at 12–15. We have reviewed that comparison, and find that it supports Patent Owner's position that the prosecution history of the parent patent is appropriately considered in evaluating whether to exercise discretion to deny the Petition. Furthermore, as Patent Owner also observes, the Examiner expressly stated that the "closest art" he identified in examining the '723 patent is "Applicant's own work and the parent [patent]." *Id.* at 11–12; Ex. 1003, 13. The face of the '723 patent also

specifically identifies the art that was expressly discussed by the Examiner during examination of the parent patent, namely Brede, Aronson, and Sheth. Ex. 1001, code (56).

A. Framework

In *Advanced Bionics, LLC v. Med-El Elektromedizinische Geräte GMBH*, IPR2019-01469, Paper 6 (PTAB Feb. 13, 2020) (precedential) ("*Advanced Bionics*"), the Board applied a two-part framework in considering whether to exercise discretion to deny institution under § 325(d): "(1) whether the same or substantially the same art previously was presented to the Office or whether the same or substantially the same arguments previously were presented to the Office; and (2) if either condition of first part of the framework is satisfied, whether the petitioner has demonstrated that the Office erred in a manner material to the patentability of challenged claims." *Advanced Bionics* at 8.

Within this two-part framework, the Board considers a number of non-exclusive factors in evaluating whether to exercise its discretion under § 325(d). *See Becton, Dickinson & Co. v. B. Braun Melsungen AG*, IPR2017-01586, Paper 8 (PTAB Dec. 15, 2017) (precedential as to § III.C.5, first para.) ("*Becton, Dickinson*"); *see also Advanced Bionics* at 9–11. The factors set forth in *Becton, Dickinson* are as follows:

> (a) the similarities and material differences between the asserted art and the prior art involved during examination;
>
> (b) the cumulative nature of the asserted art and the prior art evaluated during examination;
>
> (c) the extent to which the asserted art was evaluated during

> examination, including whether the prior art was the basis for rejection;
>
> (d) the extent of the overlap between the arguments made during examination and the manner in which petitioner relies on the prior art;
>
> (e) whether petitioner has pointed out sufficiently how the examiner erred in its evaluation of the asserted prior art; and
>
> (f) the extent to which additional evidence and facts presented in the petition warrant reconsideration of the prior art or arguments.

Becton, Dickinson at 17–18.

Factors (a), (b), and (d) of the *Becton, Dickinson* factors relate to whether the art or arguments presented in the Petition are the same or substantially the same as those previously presented to the Office. *Advanced Bionics* at 10. Factors (c), (e), and (f) "relate to whether the petitioner has demonstrated a material error by the Office" in its prior consideration of that art or arguments. *Id.* Only if the same or substantially the same art or arguments were previously presented to the Office do we then consider whether petitioner has demonstrated a material error by the Office. *Id.* "At bottom, this framework reflects a commitment to defer to previous Office evaluations of the evidence of record unless material error is shown." *Id.* at 9.

B. Obviousness Challenges over Brede and Halgren

Among Petitioner's challenges are those that allege obviousness over Brede and Halgren, with Feher additionally relied upon to address dependent claim 17. *See* Pet. 52–64, 67.[3] With respect to the first part of the *Advanced Bionics* framework, we find that substantially the same art and substantially the same arguments were previously presented to the Office.

Petitioner relies on Brede for its description of "an optical data transmission system that uses m-ary modulation, including the conversion of electrical binary data to an electrical m-ary modulation signal," and for its description of "how the transmitted signal can be corrected and cleaned to remove unwanted noise, as well as how clock data can be recovered." Pet. 53 (citing Ex. 1006, 19:7–33, 42:61–66, 48:64–49:5, 49:29–33; Ex. 1002 ¶ 216). Petitioner relies on Halgren for its disclosure of "an electro-optical interface structure," particularly its "confirm[ation] that a [person of ordinary skill in the art] would have understood the value of various form factors in various settings." *Id.* (citing Ex. 1019, abst., ¶¶ 69, 70; Ex. 1002 ¶ 217). This "confirmation," according to Petitioner, results from Halgren's disclosure that "interface encoding and decoding techniques can be implemented in a universal form factor transceiver" and that "modulation and optical-to-electrical signal conversion can occur in other transceivers and form factors." *Id.* (citing Ex. 1019 ¶¶ 69, 70). Petitioner contends that a person of ordinary skill in the art "would have been motivated to implement *Brede's* optical devices with *Halgren's* pluggable

[3] Feher is addressed below in Section II.E.

form factors, arriving at a pluggable optical transceiver."[4] *Id.* at 56 (citing Ex. 1002 ¶¶ 226–229; Ex. 1012 ¶ 58).

With respect to *Becton, Dickinson*'s factor (a), there is no dispute that Brede itself was involved during examination of the parent patent, and that portions of it were expressly cited by the Examiner in multiple Office Actions. *See, e.g.*, Ex. 1008, 89–92, 132–140; Pet. 13, 55. Patent Owner correctly observes that "[t]he Examiner applied Brede in multiple office actions for allegedly disclosing the claimed 'optical transceiver module.'" Prelim. Resp. 18; Ex. 1008, 90, 92 (Examiner citing Brede for teaching an "optical transceiver module"), 140 (Examiner citing Brede for teaching an "optical transceiver").

With respect to *Becton, Dickinson*'s factor (b), Patent Owner contends that Halgren "is cumulative of either of the secondary references applied by the Examiner during prosecution, namely, Aronson and Sheth." Prelim. Resp. 18. Patent Owner specifically contends that "Petitioner applies Halgren for its alleged disclosure of standard form factors to be combined with Brede, which is the same as what the Examiner did with Aronson and Sheth." *Id.*; Ex. 1008, 93 (Examiner combining Brede with Aronson's disclosure of "types of form factors"), 137–138 (Examiner combining Brede with Sheth's disclosure of "standardized pluggable form factors"). That is,

[4] Although the "pluggable" aspect of the claimed optical transceiver module is recited only in the preamble of independent claim 1, the parties agree that it is limiting. *See* Pet. 23 n.3 ("However, as this 'pluggable' limitation was argued as the sole distinguishing element during the prosecution of the [parent] patent, Petitioner assumes this element is a limitation for the purposes of the '723 patent."); Prelim. Resp. 46 ("The preamble of Claim 1 is limiting because the body of the claim defines the 'optical transceiver module' of the preamble.").

Exhibit 1002
Infinera Corporation v. Alexander Soto and Walter Soto
Page 027

Petitioner argues that a person of ordinary skill in the art "would have been motivated to implement *Brede's* optical devices with *Halgren's* pluggable form factors, arriving at a pluggable optical transceiver." Pet. 56.

We agree with Patent Owner's characterizations of Halgren, Aronson, and Sheth. *See* Prelim. Resp. 18. In particular, we agree with Patent Owner that "Halgren is substantially the same because it is applied for its alleged disclosure of standard form factors into which Brede's device can allegedly be incorporated, just as the Examiner applied Aronson and Sheth as disclosing form factors into which Brede's device can allegedly be installed." *Id.* at 19 (citing Ex. 1008, 93, 137–138). We further note that the Examiner applied Sheth, in particular, for disclosing "standardized *pluggable* form factors," in the same manner that Petitioner applies Halgren's pluggable form factors to Brede's optical device. *See* Pet. 56; Ex. 1008, 137–138.

In this respect, we thus also agree with Patent Owner that there is significant overlap between the arguments made during examination and the manner in which Petitioner relies on the prior art, as implicated by *Becton, Dickinson*'s factor (d). *See* Prelim. Resp. 20–26. That is, "Petitioner is applying the same art, Brede, as allegedly disclosing an optical transceiver module as modified by a secondary reference . . . applied as teaching standard form factors." *Id.* at 20 (citing Pet. 56). As discussed extensively above, this is the same basis under which the Examiner originally rejected claims during prosecution of the parent patent, and which the Applicant overcame. *See* Ex. 1008, 93, 137–138, 140.

We thus conclude that each of the *Becton, Dickinson* factors relevant to the first part of the *Advanced Bionics* framework support the finding that

substantially the same art and substantially the same arguments were previously presented to the Office.

With respect to the second part of the *Advanced Bionics* framework, we find that Petitioner has not demonstrated that the Office erred in a manner material to the patentability of challenged claims. As discussed below, Petitioner does not meaningfully assess the record of examination or explain sufficiently how or why *Becton, Dickinson* factors (c), (e), or (f) support its positions.

The asserted art (in the case of Brede) or art cumulative to the asserted art (in the case of Halgren) was evaluated extensively during prosecution of the parent patent, including forming a basis for two rejections by the Examiner, as evaluated by *Becton, Dickinson* factor (c). *See id.* Specifically, as Patent Owner observes, in these rejections, the Examiner found that each limitation of claim 1 of the parent patent was disclosed by Brede, and claim 2 of the parent patent was disclosed by Brede and Aronson or Brede and Sheth. *Id.* at 89–93, 132–134, 137–138; *see* Prelim. Resp. 20. Challenged independent claim 1 of the '723 patent additionally recites an encoder unit and decoder unit for error correction, an equalizer, and a digital to analog converter. Ex. 1001, 14:62–64, 15:1–3, 15:20–21, 15:26–28. The Examiner found these elements also taught by Brede. Ex. 1008, 90–91 ("equalizing" taught by "reference numeral 172 in Figure 22, reference numeral 214 in Figure 26; Figure 35 in its entirety"), 134–135 ("Brede teaches the method of claim 1, further comprising performing decision directed equalization"), 136 ("Regarding claim 16, Brede teaches the method of claim 1, further comprising coding the first electrical binary data signal

and decoding the second electrical binary signal according to an error correcting code").

When assessing factor (e), we consider whether Petitioner "point[s] out sufficiently how the examiner erred in its evaluation of the asserted prior art." *Supra* 21 (factors). According to Petitioner, the Examiner "misapprehended (1) the well-known aspect of the pluggable nature of these transceivers and (2) that the Applicant was aware of the prior art status of the sole distinguishing argument it made." Pet. 13. The second of these alleged Examiner errors appears to hint at some impropriety by the Applicant during prosecution because discussion of "the pluggable nature of [Applicant's] claims" was "noted in the background of [a related provisional application]" but "shifted . . . to the main portion of the '723 patent's specification." *Id.* But Petitioner does not meaningfully develop this argument and does not sufficiently explain how the Examiner's purported misapprehension regarding the *Applicant's* awareness amounts to error by the Examiner. Indeed, although included as part of its "DETAILED DESCRIPTION," the '723 patent explicitly states:

> The RX 133,136 and TX 134,135 circuitry of transceivers 100,101, or portions thereof, for example, PD 315a, 315b and LA 317a, 317b, can be combined within *industry standard* optical modules. *Common* optical module standards are 300pin, XENPAK, X2, and XPAK transponders and XFP or SFP and SFP+ transceivers.

Ex. 1001, 11:12–17 (emphases added). And, as Patent Owner points out, the Examiner nonetheless "issued office actions to Applicant citing references like Aronson and Sheth as disclosing standard form factors." Prelim. Resp. 17 n.2.

We are also not persuaded by Petitioner's assertion that the Examiner "misapprehended . . . the well-known aspect of the pluggable nature of these transceivers." Petitioner elaborates on its allegation of Examiner error by asserting that "the Examiner correctly identified the teachings of *Brede*, but misapprehended the knowledge of a [person of ordinary skill in the art], including that known pluggable form factors described in *Halgren*, which was, in fact, admitted during the prosecution of this family by the Applicant, and which was widely known in the industry's discussion and adoption of various [multi-source agreements]." Pet. 55 (citing Ex. 1019 ¶¶ 69–70; Ex. 1016, 3–5; Ex. 1017, 16, 70; Ex. 1002 ¶ 223). But Petitioner's assertion is belied by the Examiner's specific citation and application of multiple references during prosecution for their disclosure of standard (pluggable) form factors. *See, e.g.*, Ex. 1008, 93 (Examiner stating that "as evidenced by Aronson, these types of form factors [SFP, SFP+, XFP, X2, XENPAK, XPA, and 300-pin transceiver form factors] are well known in the art"), 131 (Examiner stating that "Gilliland teaches that the concept of a pluggable optical transceiver module is well known in the art," as well as a "small form factor pluggable (SFP) configuration"), 137 (Examiner stating that "as evidenced by Sheth, standardized pluggable form factors are well known in the art"). Given that the Examiner explicitly stated that form factors, pluggable optical transceiver module, and standardized pluggable form factors are "well known in the art," Petitioner's argument is not persuasive.

When assessing factor (f), we look for some explanation of how or why "the extent to which additional evidence and facts presented in the petition warrant reconsideration of the prior art or arguments." *Supra* 21 (factors). Petitioner directs our attention to no specific additional evidence

or facts that warrant reconsideration of the Examiner's determination. We accordingly conclude that each of the *Becton, Dickinson* factors relevant to the second part of the *Advanced Bionics* framework support the finding that Petitioner has not demonstrated that the Office erred in a manner material to the patentability of challenged claims.

Because we find that, for the obviousness challenges over Brede and Halgren, (1) substantially the same art and substantially the same arguments were previously presented to the Office, and (2) Petitioner has not demonstrated that the Office erred, we conclude that it is appropriate to exercise our discretion under 35 U.S.C. § 325(d) to deny the Petition with respect to those grounds.

C. Obviousness Challenges over Raghavan and Richard

Petitioner also advances challenges that allege obviousness over Raghavan and Richard, with Koh and Feher additionally relied upon to address claims 7 and 17 respectively. *See* Pet. 19–39, 64–66. Neither party asserts that Raghavan or Richard was involved during examination of the parent patent or the '723 patent. Pet. 13; *see* Prelim. Resp. 30.[5]

Petitioner relies on Raghavan for its description of "a transceiver chip that can transmit data using multiple frequency-separated channels," and on Richard for its disclosure of "a variety of form factors to allow for 'use in a hot pluggable environment.'" *Id.* at 19 (citing Ex. 1005, abst.), 20 (citing Ex. 1012 ¶ 58; Ex. 1027 ¶¶ 4, 45; Ex. 1002 ¶ 78). Petitioner contends that a person of ordinary skill in the art "would have been motivated to provide the

[5] Koh and Feher are addressed below in Section II.E.

Exhibit 1002
Infinera Corporation v. Alexander Soto and Walter Soto
Page 032

functionality of *Raghavan's* transceiver chip into *Richard's* form factors to make *Raghavan's* transceiver chip hot pluggable." *Id.* at 20 (citing Ex. 1012 ¶ 58; Ex. 1002 ¶¶ 78–79). This rationale notably parallels Petitioner's contention for the combination of Brede and Halgren. *See id.* at 56 (Petitioner contending that a person of ordinary skill in the art "would have been motivated to implement *Brede's* optical devices with *Halgren's* pluggable form factors, arriving at a pluggable optical transceiver."). Specifically, Petitioner presents an analysis that generally parallels its analysis over Brede and Halgren, with Raghavan substituting for Brede and Richard substituting for Halgren.

In considering the *Becton, Dickinson* factors relevant to the first part of the *Advanced Bionics* test, we thus find significant similarities with the art involved during examination (factor (a)) such that the art is cumulative of the art evaluated during examination (factor (b)), and that there is significant overlap with the arguments considered during examination (factor (d)). As Patent Owner asserts, "[c]umulative art was cited for identical teachings and the Petitioner's combination of a reference teaching an optical transceiver module and a reference teaching a standard form factor is the same argument presented by the Examiner." Prelim. Resp. 30; *see also id.* at 31. Petitioner alleges no different prosecution errors by the Examiner beyond those that we discuss above in the context of the Brede-Halgren challenges in evaluating *Becton, Dickinson* factors (c), (e), and (f), which are relevant to the second part of the *Advanced Bionics* test.

We accordingly find that, for the obviousness challenges over Raghavan and Richard, (1) substantially the same art and substantially the same arguments were previously presented to the Office, and (2) Petitioner

has not demonstrated that the Office erred. We therefore conclude that it is appropriate to exercise our discretion under 35 U.S.C. § 325(d) to deny the Petition with respect to those grounds.

D. Obviousness Challenges over Agazzi and Richard

In addition to its other challenges, Petitioner alleges obviousness over Agazzi and Richard, with Koh and Feher additionally relied upon to address claims 7 and 17 respectively. *See* Pet. 40–51, 65, 66–67. Neither party asserts that Agazzi was involved during examination of the parent patent or the '723 patent. Pet. 13; *see* Prelim. Resp. 34.[6]

Petitioner cites Agazzi as describing "electrical and optical receivers and transceivers that rely on processing of optical signals," and cites Richard for the same disclosure relied on in the Brede-Halgren and Raghavan-Richard challenges, namely "[a] variety of form factors [that] allow for 'use in a hot pluggable environment.'" *Id.* at 40 (citing Ex. 1004, abst.; Ex. 1012 ¶ 58; Ex. 1027 ¶¶ 4, 45; Ex. 1002 ¶ 149). Petitioner's rationale for combining the teachings of Agazzi and Richard again parallels the rationale advanced for the Brede-Halgren and Raghavan-Richard challenges: "A [person of ordinary skill in the art] would have been motivated to provide the functionality of *Agazzi* into *Richard's* form factors to incorporate the functionality of *Agazzi* into a hot pluggable environment." *Id.* at 40–41 (citing Ex. 1012 ¶ 58; Ex. 1002 ¶ 150); *see id.* at 20 (Petitioner contending that a person of ordinary skill in the art "would have been motivated to provide the functionality of *Raghavan's* transceiver chip into *Richard's* form

[6] Koh and Feher are addressed below in Section II.E.

factors to make *Raghavan's* transceiver chip hot pluggable."), 56 (Petitioner contending that a person of ordinary skill in the art "would have been motivated to implement *Brede's* optical devices with *Halgren's* pluggable form factors, arriving at a pluggable optical transceiver."). Specifically, Petitioner again presents an analysis that parallels its analysis over Brede and Halgren, this time with Agazzi substituting for Brede and Richard again substituting for Halgren.

In considering the *Becton, Dickinson* factors relevant to the first part of the *Advanced Bionics* test, we thus find significant similarities with the art involved during examination (factor (a)) such that the art is cumulative of the art evaluated during examination (factor (b)), and that there is significant overlap with the arguments considered during examination (factor (d)). As Patent Owner asserts, "Petitioner presents substantially the same proposed combination as the Examiner of a reference teaching an optical transceiver module and a reference teaching a standard form factor." Prelim. Resp. 35; *see also id.* at 35–37. Petitioner alleges no different prosecution errors by the Examiner beyond those that we discuss above in the context of the Brede-Halgren challenges in evaluating *Becton, Dickinson* factors (c), (e), and (f), which are relevant to the second part of the *Advanced Bionics* test.

We accordingly find that, for the obviousness challenges over Agazzi and Richard, (1) substantially the same art and substantially the same arguments were previously presented to the Office, and (2) Petitioner has not demonstrated that the Office erred. We therefore conclude that it is appropriate to exercise our discretion under 35 U.S.C. § 325(d) to deny the Petition with respect to those grounds.

E. Obviousness Challenges, Claims 7 and 17

As set forth above, Petitioner adds Koh to the Raghavan-Richards and Agazzi-Richards combinations to disclose claim 7, and Feher to the Brede-Halgren, Raghavan-Richards, and Agazzi-Richards combinations to disclose claim 17. *Supra* 11. Neither party asserts that Koh or Feher was presented to the Examiner during examination of the parent patent or the '723 patent. *See* Pet. 13. Patent Owner asserts that Koh is cumulative of Brede or Raghavan. Prelim. Resp. 37. Patent Owner also asserts that Feher is cumulative because the art and argument is "the same or substantially the same as that applied during examination because both the Petitioner and the Examiner found the limitation [of claim 17] in Brede." *Id.* at 38.

We find that the addition of Koh and Feher does not change the calculus regarding whether the same or substantially the same prior art previously was presented to the Office. We agree with Patent Owner's arguments. *See id.* at 37–38. We find that Koh and Feher have significant similarities with the art involved during examination (Brede) (factor (a)) such that the art is cumulative of the art evaluated during examination (factor (b)), and that there is significant overlap with the arguments considered during examination (factor (d)). Petitioner alleges no different prosecution errors by the Examiner beyond those that we discuss above in the context of the Brede-Halgren challenges in evaluating *Becton, Dickinson* factors (c), (e), and (f), which are relevant to the second part of the *Advanced Bionics* test.

We accordingly find that, for the obviousness challenges including Koh and Feher, (1) substantially the same art and substantially the same arguments were previously presented to the Office, and (2) Petitioner has not

demonstrated that the Office erred. We therefore conclude that it is appropriate to exercise our discretion under 35 U.S.C. § 325(d) to deny the Petition with respect to those grounds.

III. CONCLUSION

We conclude that, for each of Petitioner's challenges, it is appropriate to exercise our discretion under 35 U.S.C. § 325(d) to deny the Petition with respect to those grounds. We accordingly exercise that discretion for the Petition as a whole and deny institution of an *inter partes* review.

IV. ORDER

In consideration of the foregoing, it is

ORDERED that the Petition is *denied*, and no trial is instituted.

Exhibit 1002
Infinera Corporation v. Alexander Soto and Walter Soto
Page 037

For PETITIONER:

Jason A. Engel
Mark G. Knedeisen
Erik J. Halverson
Katherine L. Allor
K&L GATES LLP
Jason.Engel.PTAB@klgates.com
mark.knedeisen@klgates.com
erik.halverson@klgates.com
Katy.allor@klgates.com

For PATENT OWNER:

James Carmichael
Stephen Schreiner
Minghui Yang
CARMICHAEL IP, PLLC
jim@carmichaelip.com
schreiner@carmichaelip.com
mitch@carmichaelip.com

UNITED STATES PATENT AND TRADEMARK OFFICE

UNITED STATES DEPARTMENT OF COMMERCE
United States Patent and Trademark Office
Address: COMMISSIONER FOR PATENTS
P.O. Box 1450
Alexandria, Virginia 22313-1450
www.uspto.gov

APPLICATION NO.	ISSUE DATE	PATENT NO.	ATTORNEY DOCKET NO.	CONFIRMATION NO.
15/884,351	04/16/2019	10263723	UBI-002E	6829

93749 7590 03/27/2019

Alexander Soto
7673 Hazard Center Dr.
San Diego, CA 92108

ISSUE NOTIFICATION

The projected patent number and issue date are specified above.

Determination of Patent Term Adjustment under 35 U.S.C. 154 (b)
(application filed on or after May 29, 2000)

The Patent Term Adjustment is 0 day(s). Any patent to issue from the above-identified application will include an indication of the adjustment on the front page.

If a Continued Prosecution Application (CPA) was filed in the above-identified application, the filing date that determines Patent Term Adjustment is the filing date of the most recent CPA.

Applicant will be able to obtain more detailed information by accessing the Patent Application Information Retrieval (PAIR) WEB site (http://pair.uspto.gov).

Any questions regarding the Patent Term Extension or Adjustment determination should be directed to the Office of Patent Legal Administration at (571)-272-7702. Questions relating to issue and publication fee payments should be directed to the Application Assistance Unit (AAU) of the Office of Data Management (ODM) at (571)-272-4200.

APPLICANT(s) (Please see PAIR WEB site http://pair.uspto.gov for additional applicants):

Alexander Soto, San Diego, CA;
Walter Soto, Huntington Beach, CA;

The United States represents the largest, most dynamic marketplace in the world and is an unparalleled location for business investment, innovation, and commercialization of new technologies. The USA offers tremendous resources and advantages for those who invest and manufacture goods here. Through SelectUSA, our nation works to encourage and facilitate business investment. To learn more about why the USA is the best country in the world to develop technology, manufacture products, and grow your business, visit SelectUSA.gov.

IR103 (Rev. 10/09)

PART B - FEE(S) TRANSMITTAL

Complete and send this form, together with applicable fee(s), by mail or fax, or via EFS-Web.

By mail, send to: Mail Stop ISSUE FEE
Commissioner for Patents
P.O. Box 1450
Alexandria, Virginia 22313-1450

By fax, send to: (571)-273-2885

INSTRUCTIONS: This form should be used for transmitting the ISSUE FEE and PUBLICATION FEE (if required). Blocks 1 through 5 should be completed where appropriate. All further correspondence including the Patent, advance orders and notification of maintenance fees will be mailed to the current correspondence address as indicated unless corrected below or directed otherwise in Block 1, by (a) specifying a new correspondence address; and/or (b) indicating a separate "FEE ADDRESS" for maintenance fee notifications.

CURRENT CORRESPONDENCE ADDRESS (Note: Use Block 1 for any change of address)

93749 7590 12/06/2018
Alexander Soto
7673 Hazard Center Dr.
San Diego, CA 92108

Note: A certificate of mailing can only be used for domestic mailings of the Fee(s) Transmittal. This certificate cannot be used for any other accompanying papers. Each additional paper, such as an assignment or formal drawing, must have its own certificate of mailing or transmission.

Certificate of Mailing or Transmission

I hereby certify that this Fee(s) Transmittal is being deposited with the United States Postal Service with sufficient postage for first class mail in an envelope addressed to the Mail Stop ISSUE FEE address above, or being transmitted to the USPTO via EFS-Web or by facsimile to (571) 273-2885, on the date below.

(Typed or printed name)

(Signature)

(Date)

APPLICATION NO.	FILING DATE	FIRST NAMED INVENTOR	ATTORNEY DOCKET NO.	CONFIRMATION NO.
15/884,351	01/30/2018	Alexander Soto	UBI-002E	6829

TITLE OF INVENTION: SYSTEM AND METHOD FOR PERFORMING HIGH-SPEED COMMUNICATIONS OVER FIBER OPTICAL NETWORKS

APPLN. TYPE	ENTITY STATUS	ISSUE FEE DUE	PUBLICATION FEE DUE	PREV. PAID ISSUE FEE	TOTAL FEE(S) DUE	DATE DUE
nonprovisional	SMALL	$500	$0.00	$0.00	$500	03/06/2019

EXAMINER	ART UNIT	CLASS-SUBCLASS
BELLO, AGUSTIN	2637	398-079000

1. Change of correspondence address or indication of "Fee Address" (37 CFR 1.363).

❑ Change of correspondence address (or Change of Correspondence Address form PTO/SB/122) attached.

❑ "Fee Address" indication (or "Fee Address" Indication form PTO/SB/47; Rev 03-09 or more recent) attached. **Use of a Customer Number is required.**

2. For printing on the patent front page, list
(1) The names of up to 3 registered patent attorneys or agents OR, alternatively,
(2) The name of a single firm (having as a member a registered attorney or agent) and the names of up to 2 registered patent attorneys or agents. If no name is listed, no name will be printed.

1_____
2_____
3_____

3. ASSIGNEE NAME AND RESIDENCE DATA TO BE PRINTED ON THE PATENT (print or type)

PLEASE NOTE: Unless an assignee is identified below, no assignee data will appear on the patent. If an assignee is identified below, the document must have been previously recorded, or filed for recordation, as set forth in 37 CFR 3.11 and 37 CFR 3.81(a). Completion of this form is NOT a substitute for filing an assignment.

(A) NAME OF ASSIGNEE (B) RESIDENCE: (CITY and STATE OR COUNTRY)

Please check the appropriate assignee category or categories (will not be printed on the patent) : ❑ Individual ❑ Corporation or other private group entity ❑ Government

4a. Fees submitted: ☒ Issue Fee ❑ Publication Fee (if required) ❑ Advance Order - # of Copies _____

4b. Method of Payment: *(Please first reapply any previously paid fee shown above)*

☒ Electronic Payment via EFS-Web ❑ Enclosed check ❑ Non-electronic payment by credit card (Attach form PTO-2038)

❑ The Director is hereby authorized to charge the required fee(s), any deficiency, or credit any overpayment to Deposit Account No. _____

5. **Change in Entity Status** (from status indicated above)

❑ Applicant certifying micro entity status. See 37 CFR 1.29

❑ Applicant asserting small entity status. See 37 CFR 1.27

❑ Applicant changing to regular undiscounted fee status.

NOTE: Absent a valid certification of Micro Entity Status (see forms PTO/SB/15A and 15B), issue fee payment in the micro entity amount will not be accepted at the risk of application abandonment.
NOTE: If the application was previously under micro entity status, checking this box will be taken to be a notification of loss of entitlement to micro entity status.
NOTE: Checking this box will be taken to be a notification of loss of entitlement to small or micro entity status, as applicable.

NOTE: This form must be signed in accordance with 37 CFR 1.31 and 1.33. See 37 CFR 1.4 for signature requirements and certifications.

Authorized Signature /Alexander Soto/ Date March 1, 2019

Typed or printed name Alexander Soto Registration No. _____

PTOL-85 Part B (08-18) Approved for use through 01/31/2020 OMB 0651-0033 U.S. Patent and Trademark Office; U.S. DEPARTMENT OF COMMERCE

Electronic Patent Application Fee Transmittal

Application Number:	15884351
Filing Date:	30-Jan-2018
Title of Invention:	SYSTEM AND METHOD FOR PERFORMING HIGH-SPEED COMMUNICATIONS OVER FIBER OPTICAL NETWORKS
First Named Inventor/Applicant Name:	Alexander Soto
Filer:	Alexander Ivan Soto
Attorney Docket Number:	UBI-002E

Filed as Small Entity

Filing Fees for Utility under 35 USC 111(a)

Description	Fee Code	Quantity	Amount	Sub-Total in USD($)
Basic Filing:				
Pages:				
Claims:				
Miscellaneous-Filing:				
Petition:				
Patent-Appeals-and-Interference:				
Post-Allowance-and-Post-Issuance:				
UTILITY APPL ISSUE FEE	2501	1	500	500

Description	Fee Code	Quantity	Amount	Sub-Total in USD($)
Extension-of-Time:				
Miscellaneous:				
		Total in USD ($)		**500**

Electronic Acknowledgement Receipt

EFS ID:	35320462
Application Number:	15884351
International Application Number:	
Confirmation Number:	6829
Title of Invention:	SYSTEM AND METHOD FOR PERFORMING HIGH-SPEED COMMUNICATIONS OVER FIBER OPTICAL NETWORKS
First Named Inventor/Applicant Name:	Alexander Soto
Customer Number:	93749
Filer:	Alexander Ivan Soto
Filer Authorized By:	
Attorney Docket Number:	UBI-002E
Receipt Date:	04-MAR-2019
Filing Date:	30-JAN-2018
Time Stamp:	19:29:30
Application Type:	Utility under 35 USC 111(a)

Payment information:

Submitted with Payment	yes
Payment Type	CARD
Payment was successfully received in RAM	$500
RAM confirmation Number	030519INTEFSW19312100
Deposit Account	
Authorized User	
The Director of the USPTO is hereby authorized to charge indicated fees and credit any overpayment as follows:	

File Listing:

Document Number	Document Description	File Name	File Size(Bytes)/ Message Digest	Multi Part /.zip	Pages (if appl.)
1	Issue Fee Payment (PTO-85B)	UBI-002E_NoA_12_06_2018_2.pdf	80958 326d6b64fc05bcd7116d31f91c55ecda6fd1c920	no	1
Warnings:					
Information:					
2	Fee Worksheet (SB06)	fee-info.pdf	30137 9e285d0d41c2c356d7eb8f495d9b113248f79ce4	no	2
Warnings:					
Information:					
		Total Files Size (in bytes):	111095		

This Acknowledgement Receipt evidences receipt on the noted date by the USPTO of the indicated documents, characterized by the applicant, and including page counts, where applicable. It serves as evidence of receipt similar to a Post Card, as described in MPEP 503.

New Applications Under 35 U.S.C. 111
If a new application is being filed and the application includes the necessary components for a filing date (see 37 CFR 1.53(b)-(d) and MPEP 506), a Filing Receipt (37 CFR 1.54) will be issued in due course and the date shown on this Acknowledgement Receipt will establish the filing date of the application.
National Stage of an International Application under 35 U.S.C. 371
If a timely submission to enter the national stage of an international application is compliant with the conditions of 35 U.S.C. 371 and other applicable requirements a Form PCT/DO/EO/903 indicating acceptance of the application as a national stage submission under 35 U.S.C. 371 will be issued in addition to the Filing Receipt, in due course.
New International Application Filed with the USPTO as a Receiving Office
If a new international application is being filed and the international application includes the necessary components for an international filing date (see PCT Article 11 and MPEP 1810), a Notification of the International Application Number and of the International Filing Date (Form PCT/RO/105) will be issued in due course, subject to prescriptions concerning national security, and the date shown on this Acknowledgement Receipt will establish the international filing date of the application.

UNITED STATES PATENT AND TRADEMARK OFFICE
COMMISSIONER FOR PATENTS
P.O.BOX 1450
ALEXANDRIA VA 22313-1451

PRESORTED
FIRST-CLASS MAIL
U.S. POSTAGE PAID
POSTEDIGITAL
NNNNN

Alexander Soto
7673 Hazard Center Dr.
San Diego, CA 92108

Courtesy Reminder for
Application Serial No: 15/884,351

Attorney Docket No: UBI-002E
Customer Number: 93749
Date of Electronic Notification: 12/06/2018

This is a courtesy reminder that new correspondence is available for this application. If you have not done so already, please review the correspondence. The official date of notification of the outgoing correspondence will be indicated on the form PTOL-90 accompanying the correspondence.

An email notification regarding the correspondence was sent to the following email address(es) associated with your customer number:
alexander.i.soto@gmail.com

To view your correspondence online or update your email addresses, please visit us anytime at **https://sportal.uspto.gov/secure/myportal/privatepair.** If you have any questions, please email the Electronic Business Center (EBC) at EBC@uspto.gov or call 1-866-217-9197.

UNITED STATES PATENT AND TRADEMARK OFFICE

UNITED STATES DEPARTMENT OF COMMERCE
United States Patent and Trademark Office
Address: COMMISSIONER FOR PATENTS
P.O. Box 1450
Alexandria, Virginia 22313-1450
www.uspto.gov

NOTICE OF ALLOWANCE AND FEE(S) DUE

93749 7590 12/06/2018
Alexander Soto
7673 Hazard Center Dr.
San Diego, CA 92108

EXAMINER
BELLO, AGUSTIN

ART UNIT	PAPER NUMBER
2637	

DATE MAILED: 12/06/2018

APPLICATION NO.	FILING DATE	FIRST NAMED INVENTOR	ATTORNEY DOCKET NO.	CONFIRMATION NO.
15/884,351	01/30/2018	Alexander Soto	UBI-002E	6829

TITLE OF INVENTION: SYSTEM AND METHOD FOR PERFORMING HIGH-SPEED COMMUNICATIONS OVER FIBER OPTICAL NETWORKS

APPLN. TYPE	ENTITY STATUS	ISSUE FEE DUE	PUBLICATION FEE DUE	PREV. PAID ISSUE FEE	TOTAL FEE(S) DUE	DATE DUE
nonprovisional	SMALL	$500	$0.00	$0.00	$500	03/06/2019

THE APPLICATION IDENTIFIED ABOVE HAS BEEN EXAMINED AND IS ALLOWED FOR ISSUANCE AS A PATENT. PROSECUTION ON THE MERITS IS CLOSED. THIS NOTICE OF ALLOWANCE IS NOT A GRANT OF PATENT RIGHTS. THIS APPLICATION IS SUBJECT TO WITHDRAWAL FROM ISSUE AT THE INITIATIVE OF THE OFFICE OR UPON PETITION BY THE APPLICANT. SEE 37 CFR 1.313 AND MPEP 1308.

THE ISSUE FEE AND PUBLICATION FEE (IF REQUIRED) MUST BE PAID WITHIN THREE MONTHS FROM THE MAILING DATE OF THIS NOTICE OR THIS APPLICATION SHALL BE REGARDED AS ABANDONED. THIS STATUTORY PERIOD CANNOT BE EXTENDED. SEE 35 U.S.C. 151. THE ISSUE FEE DUE INDICATED ABOVE DOES NOT REFLECT A CREDIT FOR ANY PREVIOUSLY PAID ISSUE FEE IN THIS APPLICATION. IF AN ISSUE FEE HAS PREVIOUSLY BEEN PAID IN THIS APPLICATION (AS SHOWN ABOVE), THE RETURN OF PART B OF THIS FORM WILL BE CONSIDERED A REQUEST TO REAPPLY THE PREVIOUSLY PAID ISSUE FEE TOWARD THE ISSUE FEE NOW DUE.

HOW TO REPLY TO THIS NOTICE:

I. Review the ENTITY STATUS shown above. If the ENTITY STATUS is shown as SMALL or MICRO, verify whether entitlement to that entity status still applies.

If the ENTITY STATUS is the same as shown above, pay the TOTAL FEE(S) DUE shown above.

If the ENTITY STATUS is changed from that shown above, on PART B - FEE(S) TRANSMITTAL, complete section number 5 titled "Change in Entity Status (from status indicated above)".

For purposes of this notice, small entity fees are 1/2 the amount of undiscounted fees, and micro entity fees are 1/2 the amount of small entity fees.

II. PART B - FEE(S) TRANSMITTAL, or its equivalent, must be completed and returned to the United States Patent and Trademark Office (USPTO) with your ISSUE FEE and PUBLICATION FEE (if required). If you are charging the fee(s) to your deposit account, section "4b" of Part B - Fee(s) Transmittal should be completed and an extra copy of the form should be submitted. If an equivalent of Part B is filed, a request to reapply a previously paid issue fee must be clearly made, and delays in processing may occur due to the difficulty in recognizing the paper as an equivalent of Part B.

III. All communications regarding this application must give the application number. Please direct all communications prior to issuance to Mail Stop ISSUE FEE unless advised to the contrary.

IMPORTANT REMINDER: Maintenance fees are due in utility patents issuing on applications filed on or after Dec. 12, 1980. It is patentee's responsibility to ensure timely payment of maintenance fees when due. More information is available at www.uspto.gov/PatentMaintenanceFees.

PTOL-85 (Rev. 02/11)

PART B - FEE(S) TRANSMITTAL

Complete and send this form, together with applicable fee(s), by mail or fax, or via EFS-Web.

By mail, send to: Mail Stop ISSUE FEE
Commissioner for Patents
P.O. Box 1450
Alexandria, Virginia 22313-1450

By fax, send to: (571)-273-2885

INSTRUCTIONS: This form should be used for transmitting the ISSUE FEE and PUBLICATION FEE (if required). Blocks 1 through 5 should be completed where appropriate. All further correspondence including the Patent, advance orders and notification of maintenance fees will be mailed to the current correspondence address as indicated unless corrected below or directed otherwise in Block 1, by (a) specifying a new correspondence address; and/or (b) indicating a separate "FEE ADDRESS" for maintenance fee notifications.

CURRENT CORRESPONDENCE ADDRESS (Note: Use Block 1 for any change of address)

93749 7590 12/06/2018
Alexander Soto
7673 Hazard Center Dr.
San Diego, CA 92108

Note: A certificate of mailing can only be used for domestic mailings of the Fee(s) Transmittal. This certificate cannot be used for any other accompanying papers. Each additional paper, such as an assignment or formal drawing, must have its own certificate of mailing or transmission.

Certificate of Mailing or Transmission

I hereby certify that this Fee(s) Transmittal is being deposited with the United States Postal Service with sufficient postage for first class mail in an envelope addressed to the Mail Stop ISSUE FEE address above, or being transmitted to the USPTO via EFS-Web or by facsimile to (571) 273-2885, on the date below.

(Typed or printed name)

(Signature)

(Date)

APPLICATION NO.	FILING DATE	FIRST NAMED INVENTOR	ATTORNEY DOCKET NO.	CONFIRMATION NO.
15/884,351	01/30/2018	Alexander Soto	UBI-002E	6829

TITLE OF INVENTION: SYSTEM AND METHOD FOR PERFORMING HIGH-SPEED COMMUNICATIONS OVER FIBER OPTICAL NETWORKS

APPLN. TYPE	ENTITY STATUS	ISSUE FEE DUE	PUBLICATION FEE DUE	PREV. PAID ISSUE FEE	TOTAL FEE(S) DUE	DATE DUE
nonprovisional	SMALL	$500	$0.00	$0.00	$500	03/06/2019

EXAMINER	ART UNIT	CLASS-SUBCLASS
BELLO, AGUSTIN	2637	398-079000

1. Change of correspondence address or indication of "Fee Address" (37 CFR 1.363).

❑ Change of correspondence address (or Change of Correspondence Address form PTO/SB/122) attached.

❑ "Fee Address" indication (or "Fee Address" Indication form PTO/SB/47; Rev 03-09 or more recent) attached. **Use of a Customer Number is required.**

2. For printing on the patent front page, list
(1) The names of up to 3 registered patent attorneys or agents OR, alternatively,
(2) The name of a single firm (having as a member a registered attorney or agent) and the names of up to 2 registered patent attorneys or agents. If no name is listed, no name will be printed.

1_____
2_____
3_____

3. ASSIGNEE NAME AND RESIDENCE DATA TO BE PRINTED ON THE PATENT (print or type)

PLEASE NOTE: Unless an assignee is identified below, no assignee data will appear on the patent. If an assignee is identified below, the document must have been previously recorded, or filed for recordation, as set forth in 37 CFR 3.11 and 37 CFR 3.81(a). Completion of this form is NOT a substitute for filing an assignment.

(A) NAME OF ASSIGNEE (B) RESIDENCE: (CITY and STATE OR COUNTRY)

Please check the appropriate assignee category or categories (will not be printed on the patent) : ❑ Individual ❑ Corporation or other private group entity ❑ Government

4a. Fees submitted: ❑Issue Fee ❑Publication Fee (if required) ❑Advance Order - # of Copies _____

4b. Method of Payment: *(Please first reapply any previously paid fee shown above)*

❑ Electronic Payment via EFS-Web ❑ Enclosed check ❑ Non-electronic payment by credit card (Attach form PTO-2038)

❑ The Director is hereby authorized to charge the required fee(s), any deficiency, or credit any overpayment to Deposit Account No. _____

5. **Change in Entity Status** (from status indicated above)

❑ Applicant certifying micro entity status. See 37 CFR 1.29

❑ Applicant asserting small entity status. See 37 CFR 1.27

❑ Applicant changing to regular undiscounted fee status.

NOTE: Absent a valid certification of Micro Entity Status (see forms PTO/SB/15A and 15B), issue fee payment in the micro entity amount will not be accepted at the risk of application abandonment.
NOTE: If the application was previously under micro entity status, checking this box will be taken to be a notification of loss of entitlement to micro entity status.
NOTE: Checking this box will be taken to be a notification of loss of entitlement to small or micro entity status, as applicable.

NOTE: This form must be signed in accordance with 37 CFR 1.31 and 1.33. See 37 CFR 1.4 for signature requirements and certifications.

Authorized Signature _____ Date _____

Typed or printed name _____ Registration No. _____

Exhibit 1002
Infinera Corporation v. Alexander Soto and Walter Soto
Page 047

UNITED STATES PATENT AND TRADEMARK OFFICE

UNITED STATES DEPARTMENT OF COMMERCE
United States Patent and Trademark Office
Address: COMMISSIONER FOR PATENTS
P.O. Box 1450
Alexandria, Virginia 22313-1450
www.uspto.gov

APPLICATION NO.	FILING DATE	FIRST NAMED INVENTOR	ATTORNEY DOCKET NO.	CONFIRMATION NO.
15/884,351	01/30/2018	Alexander Soto	UBI-002E	6829

93749 7590 12/06/2018
Alexander Soto
7673 Hazard Center Dr.
San Diego, CA 92108

EXAMINER
BELLO, AGUSTIN

ART UNIT	PAPER NUMBER
2637	

DATE MAILED: 12/06/2018

Determination of Patent Term Adjustment under 35 U.S.C. 154 (b)
(Applications filed on or after May 29, 2000)

The Office has discontinued providing a Patent Term Adjustment (PTA) calculation with the Notice of Allowance.

Section 1(h)(2) of the AIA Technical Corrections Act amended 35 U.S.C. 154(b)(3)(B)(i) to eliminate the requirement that the Office provide a patent term adjustment determination with the notice of allowance. See Revisions to Patent Term Adjustment, 78 Fed. Reg. 19416, 19417 (Apr. 1, 2013). Therefore, the Office is no longer providing an initial patent term adjustment determination with the notice of allowance. The Office will continue to provide a patent term adjustment determination with the Issue Notification Letter that is mailed to applicant approximately three weeks prior to the issue date of the patent, and will include the patent term adjustment on the patent. Any request for reconsideration of the patent term adjustment determination (or reinstatement of patent term adjustment) should follow the process outlined in 37 CFR 1.705.

Any questions regarding the Patent Term Extension or Adjustment determination should be directed to the Office of Patent Legal Administration at (571)-272-7702. Questions relating to issue and publication fee payments should be directed to the Customer Service Center of the Office of Patent Publication at 1-(888)-786-0101 or (571)-272-4200.

OMB Clearance and PRA Burden Statement for PTOL-85 Part B

The Paperwork Reduction Act (PRA) of 1995 requires Federal agencies to obtain Office of Management and Budget approval before requesting most types of information from the public. When OMB approves an agency request to collect information from the public, OMB (i) provides a valid OMB Control Number and expiration date for the agency to display on the instrument that will be used to collect the information and (ii) requires the agency to inform the public about the OMB Control Number's legal significance in accordance with 5 CFR 1320.5(b).

The information collected by PTOL-85 Part B is required by 37 CFR 1.311. The information is required to obtain or retain a benefit by the public which is to file (and by the USPTO to process) an application. Confidentiality is governed by 35 U.S.C. 122 and 37 CFR 1.14. This collection is estimated to take 30 minutes to complete, including gathering, preparing, and submitting the completed application form to the USPTO. Time will vary depending upon the individual case. Any comments on the amount of time you require to complete this form and/or suggestions for reducing this burden, should be sent to the Chief Information Officer, U.S. Patent and Trademark Office, U.S. Department of Commerce, P.O. Box 1450, Alexandria, Virginia 22313-1450. DO NOT SEND FEES OR COMPLETED FORMS TO THIS ADDRESS. SEND TO: Commissioner for Patents, P.O. Box 1450, Alexandria, Virginia 22313-1450. Under the Paperwork Reduction Act of 1995, no persons are required to respond to a collection of information unless it displays a valid OMB control number.

Privacy Act Statement

The Privacy Act of 1974 (P.L. 93-579) requires that you be given certain information in connection with your submission of the attached form related to a patent application or patent. Accordingly, pursuant to the requirements of the Act, please be advised that: (1) the general authority for the collection of this information is 35 U.S.C. 2(b)(2); (2) furnishing of the information solicited is voluntary; and (3) the principal purpose for which the information is used by the U.S. Patent and Trademark Office is to process and/or examine your submission related to a patent application or patent. If you do not furnish the requested information, the U.S. Patent and Trademark Office may not be able to process and/or examine your submission, which may result in termination of proceedings or abandonment of the application or expiration of the patent.

The information provided by you in this form will be subject to the following routine uses:

1. The information on this form will be treated confidentially to the extent allowed under the Freedom of Information Act (5 U.S.C. 552) and the Privacy Act (5 U.S.C 552a). Records from this system of records may be disclosed to the Department of Justice to determine whether disclosure of these records is required by the Freedom of Information Act.
2. A record from this system of records may be disclosed, as a routine use, in the course of presenting evidence to a court, magistrate, or administrative tribunal, including disclosures to opposing counsel in the course of settlement negotiations.
3. A record in this system of records may be disclosed, as a routine use, to a Member of Congress submitting a request involving an individual, to whom the record pertains, when the individual has requested assistance from the Member with respect to the subject matter of the record.
4. A record in this system of records may be disclosed, as a routine use, to a contractor of the Agency having need for the information in order to perform a contract. Recipients of information shall be required to comply with the requirements of the Privacy Act of 1974, as amended, pursuant to 5 U.S.C. 552a(m).
5. A record related to an International Application filed under the Patent Cooperation Treaty in this system of records may be disclosed, as a routine use, to the International Bureau of the World Intellectual Property Organization, pursuant to the Patent Cooperation Treaty.
6. A record in this system of records may be disclosed, as a routine use, to another federal agency for purposes of National Security review (35 U.S.C. 181) and for review pursuant to the Atomic Energy Act (42 U.S.C. 218(c)).
7. A record from this system of records may be disclosed, as a routine use, to the Administrator, General Services, or his/her designee, during an inspection of records conducted by GSA as part of that agency's responsibility to recommend improvements in records management practices and programs, under authority of 44 U.S.C. 2904 and 2906. Such disclosure shall be made in accordance with the GSA regulations governing inspection of records for this purpose, and any other relevant (i.e., GSA or Commerce) directive. Such disclosure shall not be used to make determinations about individuals.
8. A record from this system of records may be disclosed, as a routine use, to the public after either publication of the application pursuant to 35 U.S.C. 122(b) or issuance of a patent pursuant to 35 U.S.C. 151. Further, a record may be disclosed, subject to the limitations of 37 CFR 1.14, as a routine use, to the public if the record was filed in an application which became abandoned or in which the proceedings were terminated and which application is referenced by either a published application, an application open to public inspection or an issued patent.
9. A record from this system of records may be disclosed, as a routine use, to a Federal, State, or local law enforcement agency, if the USPTO becomes aware of a violation or potential violation of law or regulation.

Notice of Allowability	Application No. 15/884,351	Applicant(s) Soto et al.	
	Examiner AGUSTIN BELLO	Art Unit 2637	AIA Status No

-- The MAILING DATE of this communication appears on the cover sheet with the correspondence address--

All claims being allowable, PROSECUTION ON THE MERITS IS (OR REMAINS) CLOSED in this application. If not included herewith (or previously mailed), a Notice of Allowance (PTOL-85) or other appropriate communication will be mailed in due course. **THIS NOTICE OF ALLOWABILITY IS NOT A GRANT OF PATENT RIGHTS.** This application is subject to withdrawal from issue at the initiative of the Office or upon petition by the applicant. See 37 CFR 1.313 and MPEP 1308.

1. ☑ This communication is responsive to the application filed 01/30/18.
   ☐ A declaration(s)/affidavit(s) under **37 CFR 1.130(b)** was/were filed on _____.

2. ☐ An election was made by the applicant in response to a restriction requirement set forth during the interview on _____; the restriction requirement and election have been incorporated into this action.

3. ☑ The allowed claim(s) is/are 1-23 . As a result of the allowed claim(s), you may be eligible to benefit from the **Patent Prosecution Highway** program at a participating intellectual property office for the corresponding application. For more information, please see **http://www.uspto.gov/patents/init_events/pph/index.jsp** or send an inquiry to **PPHfeedback@uspto.gov.**

4. ☐ Acknowledgment is made of a claim for foreign priority under 35 U.S.C. § 119(a)-(d) or (f).

   Certified copies:

   a) ☐All b) ☐ Some *c) ☐ None of the:

   1. ☐ Certified copies of the priority documents have been received.
   2. ☐ Certified copies of the priority documents have been received in Application No. _____ .
   3. ☐ Copies of the certified copies of the priority documents have been received in this national stage application from the International Bureau (PCT Rule 17.2(a)).

   * Certified copies not received: _____ .

Applicant has THREE MONTHS FROM THE "MAILING DATE" of this communication to file areply complying with the requirements noted below. Failure to timely comply will result in ABANDONMENT of this application.
THIS THREE-MONTH PERIOD IS NOT EXTENDABLE.

5. ☐ CORRECTED DRAWINGS (as "replacement sheets") must be submitted.
   ☐ including changes required by the attached Examiner's Amendment / Comment or in the Office action of Paper No./Mail Date _____ .

   Identifying indicia such as the application number (see 37 CFR 1.84(c)) should be written on the drawings in the front (not the back) of each sheet. Replacement sheet(s) should be labeled as such in the header according to 37 CFR 1.121(d).

6. ☐ DEPOSIT OF and/or INFORMATION about the deposit of BIOLOGICAL MATERIAL must be submitted. Note the attached Examiner's comment regarding REQUIREMENT FOR THE DEPOSIT OF BIOLOGICAL MATERIAL.

Attachment(s)

1. ☑ Notice of References Cited (PTO-892)
2. ☐ Information Disclosure Statements (PTO/SB/08), Paper No./Mail Date _____.
3. ☐ Examiner's Comment Regarding Requirement for Deposit of Biological Material _____.
4. ☐ Interview Summary (PTO-413), Paper No./Mail Date. _____.
5. ☐ Examiner's Amendment/Comment
6. ☑ Examiner's Statement of Reasons for Allowance
7. ☐ Other _____.

/AGUSTIN BELLO/
Primary Examiner, Art Unit 2637

DETAILED ACTION

Notice of Pre-AIA or AIA Status

1. The present application is being examined under the pre-AIA first to invent provisions.

Allowable Subject Matter

2. Claims 1-23 are allowed.

3. The following is an examiner's statement of reasons for allowance: the prior art fails to teach each of the recited elements of claim 1 within a unitary pluggable optical transceiver with a priority date before 2003.

4. The closest prior art identified by Examiner is Applicant's own work and the parent of the instant application, e.g. 15/095,137 now patent 9,887,795. However, the instant application is more specific than the parent application in that it recites the inclusion of error correcting code, an encoder unit tasked with coding the data signal error correction code, and digital to analog conversion of the modulation signal. Furthermore, the parent application is directed to the method of use of the pluggable optical transceiver whereas the instant application is directed to the pluggable optical transceiver apparatus.

Any comments considered necessary by applicant must be submitted no later than the payment of the issue fee and, to avoid processing delays, should preferably accompany the issue fee. Such submissions should be clearly labeled "Comments on Statement of Reasons for Allowance."

Conclusion

5. Any inquiry concerning this communication or earlier communications from the examiner should be directed to AGUSTIN BELLO whose telephone number is (571)272-3026. The examiner can normally be reached on Monday through Friday, 9 AM - 5 PM.

Examiner interviews are available via telephone, in-person, and video conferencing using a USPTO supplied web-based collaboration tool. To schedule an interview, applicant is encouraged to use the USPTO Automated Interview Request (AIR) at http://www.uspto.gov/interviewpractice.

If attempts to reach the examiner by telephone are unsuccessful, the examiner's supervisor, David Payne can be reached on (571)272-3024. The fax phone number for the organization where this application or proceeding is assigned is 571-273-8300.

Information regarding the status of an application may be obtained from the Patent Application Information Retrieval (PAIR) system. Status information for published applications may be obtained from either Private PAIR or Public PAIR. Status information for unpublished applications is available through Private PAIR only. For more information about the PAIR system, see http://pair-direct.uspto.gov. Should you have questions on access to the Private PAIR system, contact the Electronic Business Center (EBC) at 866-217-9197 (toll-free). If you would like assistance from a USPTO Customer Service Representative or access to the automated information system, call 800-786-9199 (IN USA OR CANADA) or 571-272-1000.

/AGUSTIN BELLO/
Primary Examiner, Art Unit 2637

Notice of References Cited	Application/Control No. 15/884,351	Applicant(s)/Patent Under Reexamination Soto et al.	
	Examiner AGUSTIN BELLO	Art Unit 2637	Page 1 of 2

U.S. PATENT DOCUMENTS

*		Document Number Country Code-Number-Kind Code	Date MM-YYYY	Name	CPC Classification	US Classification
*	A	US-20110135312-A1	06-2011	EL-AHMADI; Siraj Nour	H04L1/0057	398/135
*	B	US-6603822-B2	08-2003	Brede; Jeffrey	G06F17/14	375/340
*	C	US-20070031153-A1	02-2007	Aronson; Lewis B.	H04B10/40	398/138
*	D	US-20040028408-A1	02-2004	Cox, Jeffrey Lloyd	H04L12/4625	398/66
*	E	US-9337948-B2	05-2016	Soto; Alexander I.	H04B10/40	1/1
*	F	US-20180175963-A1	06-2018	Soto; Alexander	H04B10/40	1/1
*	G	US-20170331579-A9	11-2017	Soto; Alexander	H04B10/40	1/1
*	H	US-20170026145-A1	01-2017	Soto; Alexander	H04B10/40	1/1
*	I	US-7242868-B2	07-2007	Soto; Alexander I.	H04J14/02	375/233
*	J	US-20100158530-A1	06-2010	Soto; Alexander I.	H04B10/40	398/79
*	K	US-7729617-B2	06-2010	Sheth; Samir Satish	H04B10/801	370/465
*	L	US-7486894-B2	02-2009	Aronson; Lewis B.	H04B10/40	398/128
*	M	US-7321612-B2	01-2008	Tonietto; Davide	G11B20/10009	342/151

FOREIGN PATENT DOCUMENTS

*		Document Number Country Code-Number-Kind Code	Date MM-YYYY	Country	Name	CPC Classification
	N					
	O					
	P					
	Q					
	R					
	S					
	T					

NON-PATENT DOCUMENTS

*		Include as applicable: Author, Title Date, Publisher, Edition or Volume, Pertinent Pages)
	U	
	V	
	W	
	X	

*A copy of this reference is not being furnished with this Office action. (See MPEP § 707.05(a).)
Dates in MM-YYYY format are publication dates. Classifications may be US or foreign.

Notice of References Cited	Application/Control No. 15/884,351	Applicant(s)/Patent Under Reexamination Soto et al.	
	Examiner AGUSTIN BELLO	Art Unit 2637	Page 2 of 2

U.S. PATENT DOCUMENTS

*		Document Number Country Code-Number-Kind Code	Date MM-YYYY	Name	CPC Classification	US Classification
*	A	US-7317769-B2	01-2008	Tonietto; Davide	G11B20/10009	342/151
*	B	US-20020181895-A1	12-2002	Gilliland, Patrick B.	G02B6/4246	385/88
*	C	US-20020181894-A1	12-2002	Gilliland, Patrick B.	G02B6/4246	385/88
*	D	US-20020149821-A1	10-2002	Aronson, Lewis B.	G01M11/00	398/135
*	E	US-20150139647-A1	05-2015	Soto; Alexander Ivan	H04B10/2503	398/58
*	F	US-20140270765-A1	09-2014	Cole; Christopher R.	H04B10/27	398/48
*	G	US-20120275784-A1	11-2012	Soto; Alexander I.	H04B10/2503	398/38
*	H	US-20080166124-A1	07-2008	Soto; Alexander I.	H04J14/02	398/63
*	I	US-20030032390-A1	02-2003	Geile, Michael J.	G06F17/14	455/3.05
	J					
	K					
	L					
	M					

FOREIGN PATENT DOCUMENTS

*		Document Number Country Code-Number-Kind Code	Date MM-YYYY	Country	Name	CPC Classification
	N					
	O					
	P					
	Q					
	R					
	S					
	T					

NON-PATENT DOCUMENTS

*		Include as applicable: Author, Title Date, Publisher, Edition or Volume, Pertinent Pages)
	U	
	V	
	W	
	X	

*A copy of this reference is not being furnished with this Office action. (See MPEP § 707.05(a).)
Dates in MM-YYYY format are publication dates. Classifications may be US or foreign.

Index of Claims	Application/Control No.	Applicant(s)/Patent Under Reexamination
	15/884,351	Soto et al.
	Examiner	**Art Unit**
	AGUSTIN BELLO	2637

✓	Rejected	-	Cancelled	N	Non-Elected	A	Appeal
=	Allowed	÷	Restricted	I	Interference	O	Objected

CLAIMS

☐ Claims renumbered in the same order as presented by applicant ☐ CPA ☐ T.D. ☐ R.1.47

CLAIM		DATE								
Final	Original	11/30/2018								
	1	=								
	2	=								
	3	=								
	4	=								
	5	=								
	6	=								
	7	=								
	8	=								
	9	=								
	10	=								
	11	=								
	12	=								
	13	=								
	14	=								
	15	=								
	16	=								
	17	=								
	18	=								
	19	=								
	20	=								
	21	=								
	22	=								
	23	=								

Issue Classification	Application/Control No.	Applicant(s)/Patent Under Reexamination
	15/884,351	Soto et al.
	Examiner	**Art Unit**
	AGUSTIN BELLO	2637

CPC

Symbol					Type	Version
H04J	/	14	/	0221	F	2013-01-01
H04B	/	10	/	40	I	2013-01-01
H04J	/	14	/	02	I	2013-01-01
H04J	/	14	/	0282	I	2013-01-01
H04J	/	14	/	0298	I	2013-01-01
H04J	/	14	/	0256	I	2013-01-01
H04J	/	14	/	0267	I	2013-01-01
H04B	/	10	/	2507	I	2013-01-01
H04B	/	10	/	2581	I	2013-01-01
H04B	/	10	/	5161	I	2013-01-01
H04J	/	14	/	0227	A	2013-01-01

CPC Combination Sets

Symbol					Type	Set	Ranking	Version
	/		/					

NONE (Assistant Examiner)	(Date)	**Total Claims Allowed:** 23	
/AGUSTIN BELLO/ Primary Examiner, Art Unit 2637 (Primary Examiner)	30 November 2018 (Date)	O.G. Print Claim(s) 1	O.G. Print Figure 4

U.S. Patent and Trademark Office

Part of Paper No.: 20181130

Issue Classification	Application/Control No.	Applicant(s)/Patent Under Reexamination
	15/884,351	Soto et al.
	Examiner	**Art Unit**
	AGUSTIN BELLO	2637

INTERNATIONAL CLASSIFICATION				
CLAIMED				
H04B	/	10	/	00

NON-CLAIMED				
	/		/	

US ORIGINAL CLASSIFICATION	
CLASS	**SUBCLASS**
398	138

CROSS REFERENCES(S)						
CLASS	**SUBCLASS (ONE SUBCLASS PER BLOCK)**					
398	139					

NONE (Assistant Examiner)	(Date)	**Total Claims Allowed:** 23	
/AGUSTIN BELLO/ Primary Examiner, Art Unit 2637 (Primary Examiner)	30 November 2018 (Date)	O.G. Print Claim(s) 1	O.G. Print Figure 4

U.S. Patent and Trademark Office

Part of Paper No.: 20181130

Issue Classification	Application/Control No.	Applicant(s)/Patent Under Reexamination
	15/884,351	Soto et al.
	Examiner	**Art Unit**
	AGUSTIN BELLO	2637

☑ Claims renumbered in the same order as presented by applicant ☐ CPA ☐ T.D. ☐ R.1.47

CLAIMS

Final	Original	Final	Original	Final	Original	Final	Original	Final	Original	Final	Original	Final	Original	Final	Original

NONE (Assistant Examiner) (Date)		**Total Claims Allowed:** 23	
/AGUSTIN BELLO/ Primary Examiner, Art Unit 2637 (Primary Examiner) (Date)	30 November 2018	O.G. Print Claim(s) 1	O.G. Print Figure 4

U.S. Patent and Trademark Office Part of Paper No.: 20181130

Search Notes	Application/Control No.	Applicant(s)/Patent Under Reexamination
	15/884,351	Soto et al.
	Examiner	**Art Unit**
	AGUSTIN BELLO	2637

CPC - Searched*		
Symbol	**Date**	**Examiner**

CPC Combination Sets - Searched*		
Symbol	**Date**	**Examiner**

US Classification - Searched*			
Class	**Subclass**	**Date**	**Examiner**
398	135-139	11/30/2018	ab
385	88-92	11/29/2018	ab

* See search history printout included with this form or the SEARCH NOTES box below to determine the scope of the search.

Search Notes		
Search Notes	**Date**	**Examiner**
See EAST Search	11/30/2018	ab

Interference Search			
US Class/CPC Symbol	**US Subclass/CPC Group**	**Date**	**Examiner**
398	135-139	11/30/2018	ab
398	88-92	11/30/2018	ab

Exhibit 1002
Infinera Corporation v. Alexander Soto and Walter Soto
Page 060

Bibliographic Data

Application No: 15/884,351

Foreign Priority claimed: ○ Yes ◉ No

35 USC 119 (a-d) conditions met: ☐ Yes ☑ No | ☐ Met After Allowance

Verified and Acknowledged: /AGUSTIN BELLO/ | Examiner's Signature | Initials

Title: SYSTEM AND METHOD FOR PERFORMING HIGH-SPEED COMMUNICATIONS OVER FIBER OPTICAL NETWORKS

FILING or 371(c) DATE	CLASS	GROUP ART UNIT	ATTORNEY DOCKET NO.
01/30/2018 **RULE**	398	2637	UBI-002E

APPLICANTS

INVENTORS

Alexander Soto San Diego, CA, UNITED STATES

Walter Soto Huntington Beach, CA, UNITED STATES

CONTINUING DATA

This application is a CON of 15095137 04/10/2016 PAT 9887795

15095137 is a CON of 12512968 07/30/2009 PAT 9337948

12512968 is a CIP of 11772187 06/30/2007ABN

11772187 is a CON of 10865547 06/10/2004 PAT 7242868

10865547 has PRO of 60480488 06/21/2003

10865547 has PRO of 60477845 06/10/2003

FOREIGN APPLICATIONS

IF REQUIRED, FOREIGN LICENSE GRANTED**

03/15/2018

**** SMALL ENTITY ****

STATE OR COUNTRY

UNITED STATES

ADDRESS

Alexander Soto
7673 Hazard Center Dr.
San Diego, CA 92108
UNITED STATES

FILING FEE RECEIVED

$605

EAST Search History

EAST Search History (Prior Art)

Ref #	Hits	Search Query	DBs	Default Operator	Plurals	Time Stamp
L3	1	(15/095137).APP.	USPAT; USOCR	OR	ON	2018/11/30 12:57
L4	2489	398/135-139.ccls.	US-PGPUB; USPAT	OR	ON	2018/11/30 13:11
S1	1	"7242868".pn.	US-PGPUB; USPAT	OR	ON	2012/02/11 19:36
S2	8	("20080166124" | "5150247" | "5363408" | "5880863" | "6067319" | "6490727" | "6950477" | "7242868").PN.	US-PGPUB; USPAT	OR	ON	2012/02/11 19:36
S3	11	("5150247" | "5363408" | "5835532" | "5880863" | "6067319" | "6490727" | "6950477").PN. OR ("7242868").URPN.	US-PGPUB; USPAT; USOCR	OR	ON	2012/02/11 19:39
S4	891	"398"$.ccls. and (sfp sfp+ xfp x2 xenpak xpa)	US-PGPUB; USPAT; USOCR	OR	ON	2012/02/11 19:42
S5	52	S4 and (qam qpsk ofdm pam m-ary)	US-PGPUB; USPAT	OR	ON	2012/02/11 19:43
S6	0	("2011/0135312").URPN.	USPAT	OR	ON	2012/02/11 19:48
S7	0	("2010/0158530").URPN.	USPAT	OR	ON	2012/02/11 19:49
S8	6	S5 and equali$9 and burst$4	US-PGPUB; USPAT	OR	ON	2012/02/11 19:51
S9	0	("2008/0166124").URPN.	USPAT	OR	ON	2012/02/11 19:59
S10	9	("2005/0019036").URPN.	USPAT	OR	ON	2012/02/11 19:59
S11	64	("3916379" | "3934224" | "4291403" | "4331974" | "4387456" | "4393493" | "4395768" | "4397020" | "4404589" | "4604745" | "4710924" | "4769761" | "5153763" | "5175817" | "5185736" | "5185742" | "5216697" | "5351245" | "5357249" | "5519830" | "5537443" | "5655068").PN. OR ("6603822").URPN.	US-PGPUB; USPAT; USOCR	OR	ON	2012/02/11 20:53
S12	654	("20010001616" | "20010005319" | "20010024474" | "20010032334" | "20010033611" | "20010050926" | "20020012421" | "20020015423" | "20020015477" | "20020061012" | "20020090909" | "20020098795" | "20020098796" | "20020098797" |	US-PGPUB; USPAT; USOCR	OR	ON	2012/02/11 21:15

"20020098798" | "20020102937" |
"20020105950" | "20020106060" |
"20020107979" | "20020116719" |
"20030026282" | "20030032390" |
"20030043928" | "20030123384" |
"20040012387" | "20040042387" |
"20050122218" | "20070053465" |
"20070076589" | "20070098047" |
"20070110096" | "20070110220" |
"20070115803" | "20070116209" |
"20070121546" | "20070121573" |
"20070121743" | "20070121744" |
"20070121745" | "20070141997" |
"20070147229" | "20070157277" |
"20070157278" | "20070162943" |
"20070174890" | "20070183591" |
"20070186260" | "20070186261" |
"20070192815" | "20070195687" |
"20070195689" | "20070195902" |
"20070201345" | "20070201346" |
"20070201347" | "20070201348" |
"20070201573" | "20070201628" |
"20070204317" | "20070206491" |
"20070206693" | "20070211617" |
"20070217324" | "20070217325" |
"20070223363" | "20070230325" |
"20070237070" | "20070237182" |
"20070242597" | "20070253500" |
"20070263665" | "20070274200" |
"20070274202" | "20070280099" |
"20070286240" | "20080025201" |
"20080025202" | "20080025284" |
"20080031127" | "20080037414" |
"20080037415" | "20080037663" |
"20080040763" | "20080043612" |
"20080043704" | "20080049599" |
"20080049604" | "20080049856" |
"20080049860" | "20080056119" |
"20080056398" | "20080063010" |
"20080082598").PN. OR ("20080123514" |
"20080225690" | "20080225691" |
"20080225692" | "20080240214" |
"20080240410" | "20080253435" |
"20080273607" | "3539924" | "3609328" |
"3628057" | "3639838" | "3700820" |
"3706933" | "3742145" | "3750022" |
"3750175" | "3769970" | "3780230" |
"3805265" | "3838343" | "3868605" |
"3916379" | "3934224" | "4009343" |
"4053713" | "4090220" | "4092596" |
"4101738" | "4105863" | "4107470" |
"4135202" | "4156847" | "4161786" |
"4185168" | "4191860" | "4206320" |
"4215366" | "4267591" | "4275452" |
"4290142" | "4291403" | "4300229" |
"4316284" | "4316285" | "4331974" |
"4343042" | "4367548" | "4381546" |
"4387456" | "4393493" | "4395768" |
"4395780" | "4397020" | "4404589" |
"4430731" | "4438511" | "4441180" |
"4466017" | "4472802" | "4475211" |
"4484218" | "4488004" | "4488294" |
"4491983" | "4494228" | "4495619" |
"4500989" | "4503533" | "4506387" |

"4512033" | "4516170" | "4519074" |
"4528656" | "4528663" | "4533948" |
"4545048" | "4558358" | "4561101" |
"4566100" | "4574305" | "4575682" |
"4587066" | "4602375" | "4604721" |
"4604745" | "4612626" | "4613975" |
"4613980" | "4617656" | "4618955" |
"4621355" | "4623920" | "4642688" |
"4642806" | "4644526" | "4644535" |
"4646296" | "4648123" | "4651320" |
"4651330" | "4661945" | "4677647" |
"4677686" | "4679227" | "4686667" |
"4688210" | "4691314" | "4701911" |
"4705350" | "4707832" | "4709406" |
"4709418" | "4710918" | "4710924" |
"4727575" | "4731816" | "4734764" |
"4745592" | "4748689" | "4757495" |
"4763317").PN. OR ("4768188" | "4769761"
| "4773066" | "4774707" | "4775210" |
"4783779" | "4791590" | "4799252" |
"4800588" | "4807259" | "4809298" |
"4821120" | "4827473" | "4847872" |
"4847880" | "4853686" | "4858225" |
"4860018" | "4860287" | "4862104" |
"4866732" | "4868811" | "4879527" |
"4881241" | "4881243" | "4891694" |
"4907233" | "4912705" | "4912721" |
"4942602" | "4943980" | "4953197" |
"4959862" | "4975899" | "4975916" |
"4977593" | "4977612" | "4980897" |
"4985902" | "4991133" | "4996706" |
"4998244" | "5005169" | "5005183" |
"5010586" | "5014267" | "5022024" |
"5025485" | "5027426" | "5029164" |
"5038342" | "5042000" | "5054050" |
"5058133" | "5063574" | "5063595" |
"5072441" | "5073899" | "5084903" |
"5086470" | "5088111" | "5091906" |
"5095482" | "5101290" | "5103459" |
"5111460" | "5111497" | "5115451" |
"5121409" | "5124980" | "5125100" |
"5128625" | "5128967" | "5134464" |
"5136411" | "5138635" | "5142532" |
"5153763" | "5153764" | "5157659" |
"5166924" | "5170470" | "5173899" |
"5175817" | "5175867" | "5177739" |
"5181106" | "5185736" | "5185738" |
"5185742" | "5191459" | "5191576" |
"5193103" | "5193109" | "5195092" |
"5197061" | "5204874" | "5206886" |
"5208812" | "5214687" | "5216696" |
"5216697" | "5225902" | "5226081" |
"5228025" | "5228062" | "5235615" |
"5235619" | "5243598" | "5245459" |
"5249305" | "5255086" | "5255290" |
"5262883" | "5272700" | "5274629" |
"5276703" | "5278889" | "5280630" |
"5282023" | "5282222" | "5283811" |
"5285474" | "5289474" | "5291289").PN.
OR ("5293329" | "5293382" | "5297136" |
"5297186" | "5299192" | "5299201" |
"5303229" | "5307376" | "5313169" |
"5313413" | "5315583" | "5315584" |
"5317596" | "5321542" | "5323391" |

"5327455" | "5327575" | "5329552" |
"5331642" | "5337175" | "5341365" |
"5343209" | "5343499" | "5345439" |
"5345440" | "5347304" | "5348632" |
"5349580" | "5351245" | "5353307" |
"5355114" | "5355401" | "5357249" |
"5357502" | "5365525" | "5371548" |
"5371696" | "5371761" | "5371780" |
"5373502" | "5375140" | "5381459" |
"5387941" | "5390216" | "5400322" |
"5406551" | "5408260" | "5408465" |
"5408681" | "5416767" | "5416801" |
"5420851" | "5423067" | "5425027" |
"5425050" | "5430799" | "5440268" |
"5440335" | "5444697" | "5446727" |
"5446918" | "5448750" | "5454037" |
"5455547" | "5467384" | "5469468" |
"5469495" | "5471464" | "5471474" |
"5479168" | "5479447" | "5483529" |
"5483550" | "5485630" | "5487066" |
"5488412" | "5488413" | "5488632" |
"5495283" | "5499047" | "5499236" |
"5499241" | "5499273" | "5504773" |
"5504775" | "5507034" | "5509003" |
"5512937" | "5513184" | "5513248" |
"5519706" | "5519731" | "5519830" |
"5521943" | "5526348" | "5528283" |
"5528582" | "5528585" | "5528621" |
"5533008" | "5533012" | "5534913" |
"5535206" | "5537414" | "5537443" |
"5541955" | "5541965" | "5546119" |
"5546383" | "5548582" | "5550812" |
"5553064" | "5553076" | "5557612" |
"5557639" | "5559795" | "5559833" |
"5559858" | "5570364" | "5576702" |
"5579321" | "5581554" | "5581555" |
"5584051" | "5586121").PN. OR ("5588022"
| "5588413" | "5590403" | "5592470" |
"5592540" | "5594726" | "5596604" |
"5600672" | "5600754" | "5602836" |
"5603081" | "5606576" | "5606725" |
"5608764" | "5610944" | "5613193" |
"5617148" | "5619504" | "5621753" |
"5625651" | "5627863" | "5631846" |
"5636246" | "5644573" | "5646935" |
"5650997" | "5652772" | "5655068" |
"5659351" | "5666293" | "5673252" |
"5673291" | "5673292" | "5680388" |
"5694389" | "5699365" | "5703873" |
"5715242" | "5719872" | "5726973" |
"5732068" | "5745837" | "5748677" |
"5751766" | "5754650" | "5764706" |
"5765097" | "5768269" | "5768309" |
"5771449" | "5774689" | "5784363" |
"5784597" | "5784683" | "5787483" |
"5790607" | "5793759" | "5793772" |
"5794119" | "5802044" | "5802117" |
"5802173" | "5802241" | "5802278" |
"5809431" | "5815488" | "5815794" |
"5828660" | "5838799" | "5852604" |
"5859876" | "5864621" | "5867489" |
"5867764" | "5878325" | "5896382" |
"5898732" | "5903546" | "5907586" |
"5909436" | "5910970" | "5933454" |

		"5943361" | "5946322" | "5956338" | "5959660" | "5963557" | "5966376" | "5969584" | "5987014" | "5987061" | "5991308" | "5995539" | "5999970" | "6002722" | "6005861" | "6011950" | "6018528" | "6021158" | "6021423" | "6028933" | "6038251" | "6041051" | "6041056" | "6044107" | "6055242" | "6055268" | "6058307" | "6064662" | "6075787" | "6075972" | "6091932" | "6097736" | "6125139" | "6128276" | "6141546" | "6157669" | "6201796" | "6208630" | "6212225" | "6219840" | "6243369" | "6275990" | "6279158" | "6282683").PN. OR ("6292651" | "6307868" | "6330241" | "6334219" | "6336201" | "6349138" | "6356555" | "6366585" | "6415133" | "6418558" | "6426983" | "6430417" | "6434583" | "6467092" | "6477354" | "6487258" | "6487405" | "6496488" | "6496982" | "6510229" | "6512737" | "6535715" | "6577642" | "6594322" | "6603822" | "6606351" | "6608835" | "6662367" | "6792038" | "6819709" | "6937617" | "7002898" | "7068678" | "7069577" | "7071994" | "7079549" | "7123592" | "7280564" | "7310522" | "7352690" | "7352779" | "7355963" | "7355964" | "7372859" | "7385916" | "7391711" | "7391712" | "7394753" | "7400572" | "7408873" | "7414960" | "7414961" | "7417944" | "7420913" | "7420914" | "7426177" | "7436812" | "7440391" | "7443784" | "7492791" | "7539126" | "RE33900" | "RE36430").PN. OR ("RE41771").URPN.				
S13	141	S12 and (sfp sfp+ xfp x2 xenpak xpa)	US-PGPUB; USPAT; USOCR	OR	ON	2012/02/11 21:16
S14	54	S13 and @ad<="20030621"	US-PGPUB; USPAT; USOCR	OR	ON	2012/02/11 21:17
S15	2	S12 and (sfp sfp+ xfp xenpak xpa)	US-PGPUB; USPAT; USOCR	OR	ON	2012/02/11 21:17
S16	725	"398"$.ccls. and (sfp sfp+ xfp xenpak xpa)	US-PGPUB; USPAT; USOCR	OR	ON	2012/02/11 21:18
S17	47	S16 and @ad<="20030621"	US-PGPUB; USPAT; USOCR	OR	ON	2012/02/11 21:18
S18	0	S17 and (qam qpsk ofdm pam m-ary)	US-PGPUB; USPAT	OR	ON	2012/02/11 21:18
S19	5	S17 and equali$9 and ((clock near recover$6) (CDR))	US-PGPUB; USPAT;	OR	ON	2012/02/11 21:32

			USOCR			
S20	582	"385"$.ccls. and (sfp sfp+ xfp xenpak xpa)	US-PGPUB; USPAT; USOCR	OR	ON	2012/02/11 21:34
S21	3	S20 and (qam qpsk ofdm pam m-ary)	US-PGPUB; USPAT	OR	ON	2012/02/11 21:34
S22	5619	(sfp sfp+ xfp xenpak xpa)	US-PGPUB; USPAT; USOCR	OR	ON	2012/02/11 21:35
S23	191	S22 and (qam qpsk ofdm pam m-ary)	US-PGPUB; USPAT	OR	ON	2012/02/11 21:35
S24	4	S23 and equali$9 and ((clock near recover$6) (CDR)) and burst$4	US-PGPUB; USPAT; USOCR	OR	ON	2012/02/11 21:36
S25	257	S22 and (qam (quadrature near amplitude) qpsk (quadrature near phase) ofdm (orthogonal near frequency) pam (pulse near amplitude) m-ary)	US-PGPUB; USPAT	OR	ON	2012/02/11 21:37
S26	4	S25 and equali$9 and ((clock near recover$6) (CDR)) and burst$4	US-PGPUB; USPAT; USOCR	OR	ON	2012/02/11 21:38
S27	6	12/512968	US-PGPUB; USPAT	OR	ON	2017/04/27 10:09
S28	1942	"398"$.ccls. and ((sfp sfp+ xfp x2 xenpak xpa) pluggable)	US-PGPUB; USPAT; USOCR	OR	ON	2017/04/27 20:50
S29	94	S28 and @pd<="20030610"	US-PGPUB; USPAT; USOCR	OR	ON	2017/04/27 20:51
S30	14	(US-20110135312-$ or US-20100158530-$ or US-20070031153-$ or US-20040028408-$ or US-20020181895-$ or US-20020181894-$ or US-20020149821-$).did. or (US-7242868-$ or US-6603822-$ or US-7729617-$ or US-7486894-$ or US-7321612-$ or US-7317769-$ or US-9337948-$).did.	US-PGPUB; USPAT	OR	ON	2017/04/28 23:24
S31	5	S30 and sfp$ and xfp$	US-PGPUB; USPAT	OR	ON	2017/04/28 23:26
S32	14	(US-20110135312-$ or US-20100158530-$ or US-20070031153-$ or US-20040028408-$ or US-20020181895-$ or US-20020181894-$ or US-20020149821-$).did. or (US-9337948-$ or US-7729617-$ or US-7486894-$ or US-7321612-$ or US-7317769-$ or US-7242868-$ or US-6603822-$).did.	US-PGPUB; USPAT	OR	ON	2018/11/29 11:26
S33	10	(US-20110135312-$ or US-20100158530-$ or US-20070031153-$ or US-20040028408-	US-PGPUB;	OR	ON	2018/11/29 11:26

		$).did. or (US-7729617-$ or US-7486894-$ or US-7321612-$ or US-7317769-$ or US-7242868-$ or US-6603822-$).did.	USPAT			
S34	3548	("398"$.ccls. h04b10/$.cpc. 385/88-92.ccls.) and ((sfp sfp+ xfp x2 xenpak xpa) (pluggable near3 transceiver))	US-PGPUB; USPAT; USOCR	OR	ON	2018/11/29 21:40
S35	582	S34 and (fec (forward near3 error))	US-PGPUB; USPAT; USOCR	OR	ON	2018/11/29 21:42
S36	405	S35 and analog	US-PGPUB; USPAT; USOCR	OR	ON	2018/11/29 21:42
S37	27	S36 and m-ary	US-PGPUB; USPAT; USOCR	OR	ON	2018/11/29 21:43
S38	14	(US-20110135312-$ or US-20100158530-$ or US-20070031153-$ or US-20040028408-$ or US-20020181895-$ or US-20020181894-$ or US-20020149821-$).did. or (US-7242868-$ or US-6603822-$ or US-7729617-$ or US-7486894-$ or US-7321612-$ or US-7317769-$ or US-9337948-$).did.	US-PGPUB; USPAT	OR	ON	2018/11/29 21:43
S39	24	S37 not S38	US-PGPUB; USPAT	OR	ON	2018/11/29 21:44
S40	1	(13/543880).APP.	USPAT; USOCR	OR	ON	2018/11/29 22:04
S41	46	("20020006111" | "20020067529" | "20020163921" | "20030091045" | "20030137975" | "20030227926" | "20030236916" | "20040028408" | "20040052274" | "20040076181" | "20040133920" | "20070031153" | "20080166124" | "20100158530" | "20110135312" | "4701909" | "4776041" | "5029333" | "5150247" | "5363408" | "5572349" | "5880863" | "6023467" | "6067319" | "6490727" | "6498667" | "6603822" | "6778399" | "6788833" | "6792207" | "6950477" | "6970461" | "7031343" | "7181142" | "7242868" | "7317769" | "7321612" | "7486894" | "7729617").PN. OR ("8958697").URPN.	US-PGPUB; USPAT; USOCR	OR	ON	2018/11/29 22:04
S42	43	S41 not S37	US-PGPUB; USPAT; USOCR	OR	ON	2018/11/29 22:07
S43	12	S42 and error near3 correct$6	US-PGPUB; USPAT; USOCR	OR	ON	2018/11/29 22:08
S44	88	((("SOTO") near3 ("Alexander")) OR (("SOTO") near3 ("Walter"))).INV.	US-PGPUB; USPAT; USOCR;	OR	ON	2018/11/29 22:29

			EPO; JPO; DERWENT			
S45	796	S34 and (fec (forward near3 error) (error near3 correct$6))	US-PGPUB; USPAT; USOCR	OR	ON	2018/11/29 22:30
S46	3742	("398"$.ccls. h04b10/$.cpc. 385/88-92.ccls.) and ((sfp sfp+ xfp x2 xenpak xpa) (plug$8 near3 transceiver))	US-PGPUB; USPAT; USOCR	OR	ON	2018/11/29 22:31
S47	802	S46 and (fec (forward near3 error) (error near3 correct$6))	US-PGPUB; USPAT; USOCR	OR	ON	2018/11/29 22:31
S48	442	S47 and (qam qpsk ofdm pam m-ary)	US-PGPUB; USPAT	OR	ON	2018/11/29 22:31
S49	417	S48 and (analog (ADC DAC) analogue analog$digital)	US-PGPUB; USPAT	OR	ON	2018/11/29 22:32
S50	31	S49 and @pd<="20030610"	US-PGPUB; USPAT	OR	ON	2018/11/29 22:33
S51	36	S44 and (fec (forward near3 error) (error near3 correct$6))	US-PGPUB; USPAT; USOCR	OR	ON	2018/11/29 22:34
S52	33	S51 not S38	US-PGPUB; USPAT; USOCR	OR	ON	2018/11/29 22:34
S53	22	(US-20110135312-$ or US-20100158530-$ or US-20070031153-$ or US-20040028408-$ or US-20020181895-$ or US-20020181894-$ or US-20020149821-$ or US-20180175963-$ or US-20170331579-$ or US-20170026145-$ or US-20150139647-$ or US-20140270765-$ or US-20120275784-$ or US-20080166124-$ or US-20030032390-$).did. or (US-7242868-$ or US-6603822-$ or US-7729617-$ or US-7486894-$ or US-7321612-$ or US-7317769-$ or US-9337948-$).did.	US-PGPUB; USPAT	OR	ON	2018/11/29 22:35
S54	27	S51 not S53	US-PGPUB; USPAT	OR	ON	2018/11/29 22:35

11/30/2018 1:18:07 PM
C:\Users\abello\Documents\EAST\Workspaces\15884351.wsp

PATENT APPLICATION FEE DETERMINATION RECORD

Substitute for Form PTO-875

Application or Docket Number
15/884,351

APPLICATION AS FILED - PART I

FOR	(Column 1) NUMBER FILED	(Column 2) NUMBER EXTRA	SMALL ENTITY RATE($)	SMALL ENTITY FEE($)	OR	OTHER THAN SMALL ENTITY RATE($)	OTHER THAN SMALL ENTITY FEE($)
BASIC FEE (37 CFR 1.16(a), (b), or (c))	N/A	N/A	N/A	75		N/A	
SEARCH FEE (37 CFR 1.16(k), (i), or (m))	N/A	N/A	N/A	330		N/A	
EXAMINATION FEE (37 CFR 1.16(o), (p), or (q))	N/A	N/A	N/A	380		N/A	
TOTAL CLAIMS (37 CFR 1.16(i))	23 minus 20 =	* 3	x 50 =	150	OR		
INDEPENDENT CLAIMS (37 CFR 1.16(h))	1 minus 3 =	*	x 230 =	0.00			
APPLICATION SIZE FEE (37 CFR 1.16(s))	If the specification and drawings exceed 100 sheets of paper, the application size fee due is $310 ($155 for small entity) for each additional 50 sheets or fraction thereof. See 35 U.S.C. 41(a)(1)(G) and 37 CFR 1.16(s).			0.00			
MULTIPLE DEPENDENT CLAIM PRESENT (37 CFR 1.16(j))				0.00			
* If the difference in column 1 is less than zero, enter "0" in column 2.			TOTAL	935		TOTAL	

APPLICATION AS AMENDED - PART II

		(Column 1) CLAIMS REMAINING AFTER AMENDMENT		(Column 2) HIGHEST NUMBER PREVIOUSLY PAID FOR	(Column 3) PRESENT EXTRA	SMALL ENTITY RATE($)	SMALL ENTITY ADDITIONAL FEE($)	OR	OTHER THAN SMALL ENTITY RATE($)	OTHER THAN SMALL ENTITY ADDITIONAL FEE($)
AMENDMENT A	Total (37 CFR 1.16(i))	*	Minus	**	=	x =		OR	x =	
AMENDMENT A	Independent (37 CFR 1.16(h))	*	Minus	***	=	x =		OR	x =	
AMENDMENT A	Application Size Fee (37 CFR 1.16(s))									
AMENDMENT A	FIRST PRESENTATION OF MULTIPLE DEPENDENT CLAIM (37 CFR 1.16(j))							OR		
						TOTAL ADD'L FEE		OR	TOTAL ADD'L FEE	

		(Column 1) CLAIMS REMAINING AFTER AMENDMENT		(Column 2) HIGHEST NUMBER PREVIOUSLY PAID FOR	(Column 3) PRESENT EXTRA	RATE($)	ADDITIONAL FEE($)	OR	RATE($)	ADDITIONAL FEE($)
AMENDMENT B	Total (37 CFR 1.16(i))	*	Minus	**	=	x =		OR	x =	
AMENDMENT B	Independent (37 CFR 1.16(h))	*	Minus	***	=	x =		OR	x =	
AMENDMENT B	Application Size Fee (37 CFR 1.16(s))									
AMENDMENT B	FIRST PRESENTATION OF MULTIPLE DEPENDENT CLAIM (37 CFR 1.16(j))							OR		
						TOTAL ADD'L FEE		OR	TOTAL ADD'L FEE	

* If the entry in column 1 is less than the entry in column 2, write "0" in column 3.
** If the "Highest Number Previously Paid For" IN THIS SPACE is less than 20, enter "20".
*** If the "Highest Number Previously Paid For" IN THIS SPACE is less than 3, enter "3".
The "Highest Number Previously Paid For" (Total or Independent) is the highest found in the appropriate box in column 1.

UNITED STATES PATENT AND TRADEMARK OFFICE

UNITED STATES DEPARTMENT OF COMMERCE
United States Patent and Trademark Office
Address: COMMISSIONER FOR PATENTS
P.O. Box 1450
Alexandria, Virginia 22313-1450
www.uspto.gov

APPLICATION NUMBER	FILING or 371(c) DATE	GRP ART UNIT	FIL FEE REC'D	ATTY.DOCKET.NO	TOT CLAIMS	IND CLAIMS
15/884,351	01/30/2018	2637	1015	UBI-002E	23	1

CONFIRMATION NO. 6829

UPDATED FILING RECEIPT

93749
Alexander Soto
7673 Hazard Center Dr.
San Diego, CA 92108

OC000000105815308

Date Mailed: 11/16/2018

Receipt is acknowledged of this non-provisional patent application. The application will be taken up for examination in due course. Applicant will be notified as to the results of the examination. Any correspondence concerning the application must include the following identification information: the U.S. APPLICATION NUMBER, FILING DATE, NAME OF APPLICANT, and TITLE OF INVENTION. Fees transmitted by check or draft are subject to collection. Please verify the accuracy of the data presented on this receipt. **If an error is noted on this Filing Receipt, please submit a written request for a Filing Receipt Correction. Please provide a copy of this Filing Receipt with the changes noted thereon. If you received a "Notice to File Missing Parts" for this application, please submit any corrections to this Filing Receipt with your reply to the Notice. When the USPTO processes the reply to the Notice, the USPTO will generate another Filing Receipt incorporating the requested corrections**

Inventor(s)

Alexander Soto, San Diego, CA;
Walter Soto, Huntington Beach, CA;

Applicant(s)

Alexander Soto, San Diego, CA;
Walter Soto, Huntington Beach, CA;

Power of Attorney: None

Domestic Priority data as claimed by applicant

This application is a CON of 15/095,137 04/10/2016 PAT 9887795
which is a CON of 12/512,968 07/30/2009 PAT 9337948
which is a CIP of 11/772,187 06/30/2007 ABN
which is a CON of 10/865,547 06/10/2004 PAT 7242868
which claims benefit of 60/480,488 06/21/2003
and claims benefit of 60/477,845 06/10/2003

Foreign Applications for which priority is claimed (You may be eligible to benefit from the **Patent Prosecution Highway** program at the USPTO. Please see http://www.uspto.gov for more information.) - None.
Foreign application information must be provided in an Application Data Sheet in order to constitute a claim to foreign priority. See 37 CFR 1.55 and 1.76.

Permission to Access Application via Priority Document Exchange: Yes

Permission to Access Search Results: Yes

Applicant may provide or rescind an authorization for access using Form PTO/SB/39 or Form PTO/SB/69 as appropriate.

If Required, Foreign Filing License Granted: 03/15/2018
The country code and number of your priority application, to be used for filing abroad under the Paris Convention, is **US 15/884,351**
Projected Publication Date: Not Applicable
Non-Publication Request: No
Early Publication Request: No
**** SMALL ENTITY ****
Title

SYSTEM AND METHOD FOR PERFORMING HIGH-SPEED COMMUNICATIONS OVER FIBER OPTICAL NETWORKS

Preliminary Class

398

Statement under 37 CFR 1.55 or 1.78 for AIA (First Inventor to File) Transition Applications: No

PROTECTING YOUR INVENTION OUTSIDE THE UNITED STATES

Since the rights granted by a U.S. patent extend only throughout the territory of the United States and have no effect in a foreign country, an inventor who wishes patent protection in another country must apply for a patent in a specific country or in regional patent offices. Applicants may wish to consider the filing of an international application under the Patent Cooperation Treaty (PCT). An international (PCT) application generally has the same effect as a regular national patent application in each PCT-member country. The PCT process **simplifies** the filing of patent applications on the same invention in member countries, but **does not result** in a grant of "an international patent" and does not eliminate the need of applicants to file additional documents and fees in countries where patent protection is desired.

Almost every country has its own patent law, and a person desiring a patent in a particular country must make an application for patent in that country in accordance with its particular laws. Since the laws of many countries differ in various respects from the patent law of the United States, applicants are advised to seek guidance from specific foreign countries to ensure that patent rights are not lost prematurely.

Applicants also are advised that in the case of inventions made in the United States, the Director of the USPTO must issue a license before applicants can apply for a patent in a foreign country. The filing of a U.S. patent application serves as a request for a foreign filing license. The application's filing receipt contains further information and guidance as to the status of applicant's license for foreign filing.

Applicants may wish to consult the USPTO booklet, "General Information Concerning Patents" (specifically, the section entitled "Treaties and Foreign Patents") for more information on timeframes and deadlines for filing foreign patent applications. The guide is available either by contacting the USPTO Contact Center at 800-786-9199, or it can be viewed on the USPTO website at http://www.uspto.gov/web/offices/pac/doc/general/index.html.

For information on preventing theft of your intellectual property (patents, trademarks and copyrights), you may wish to consult the U.S. Government website, http://www.stopfakes.gov. Part of a Department of Commerce initiative, this website includes self-help "toolkits" giving innovators guidance on how to protect intellectual property in specific

countries such as China, Korea and Mexico. For questions regarding patent enforcement issues, applicants may call the U.S. Government hotline at 1-866-999-HALT (1-866-999-4258).

LICENSE FOR FOREIGN FILING UNDER

Title 35, United States Code, Section 184

Title 37, Code of Federal Regulations, 5.11 & 5.15

GRANTED

The applicant has been granted a license under 35 U.S.C. 184, if the phrase "IF REQUIRED, FOREIGN FILING LICENSE GRANTED" followed by a date appears on this form. Such licenses are issued in all applications where the conditions for issuance of a license have been met, regardless of whether or not a license may be required as set forth in 37 CFR 5.15. The scope and limitations of this license are set forth in 37 CFR 5.15(a) unless an earlier license has been issued under 37 CFR 5.15(b). The license is subject to revocation upon written notification. The date indicated is the effective date of the license, unless an earlier license of similar scope has been granted under 37 CFR 5.13 or 5.14.

This license is to be retained by the licensee and may be used at any time on or after the effective date thereof unless it is revoked. This license is automatically transferred to any related applications(s) filed under 37 CFR 1.53(d). This license is not retroactive.

The grant of a license does not in any way lessen the responsibility of a licensee for the security of the subject matter as imposed by any Government contract or the provisions of existing laws relating to espionage and the national security or the export of technical data. Licensees should apprise themselves of current regulations especially with respect to certain countries, of other agencies, particularly the Office of Defense Trade Controls, Department of State (with respect to Arms, Munitions and Implements of War (22 CFR 121-128)); the Bureau of Industry and Security, Department of Commerce (15 CFR parts 730-774); the Office of Foreign AssetsControl, Department of Treasury (31 CFR Parts 500+) and the Department of Energy.

NOT GRANTED

No license under 35 U.S.C. 184 has been granted at this time, if the phrase "IF REQUIRED, FOREIGN FILING LICENSE GRANTED" DOES NOT appear on this form. Applicant may still petition for a license under 37 CFR 5.12, if a license is desired before the expiration of 6 months from the filing date of the application. If 6 months has lapsed from the filing date of this application and the licensee has not received any indication of a secrecy order under 35 U.S.C. 181, the licensee may foreign file the application pursuant to 37 CFR 5.15(b).

SelectUSA

The United States represents the largest, most dynamic marketplace in the world and is an unparalleled location for business investment, innovation, and commercialization of new technologies. The U.S. offers tremendous resources and advantages for those who invest and manufacture goods here. Through SelectUSA, our nation works to promote and facilitate business investment. SelectUSA provides information assistance to the international investor community; serves as an ombudsman for existing and potential investors; advocates on behalf of U.S. cities, states, and regions competing for global investment; and counsels U.S. economic development organizations on investment attraction best practices. To learn more about why the United States is the best country in the world to develop

technology, manufacture products, deliver services, and grow your business, visit http://www.SelectUSA.gov or call +1-202-482-6800.

UNITED STATES PATENT AND TRADEMARK OFFICE

UNITED STATES DEPARTMENT OF COMMERCE
United States Patent and Trademark Office
Address: COMMISSIONER FOR PATENTS
P.O. Box 1450
Alexandria, Virginia 22313-1450
www.uspto.gov

APPLICATION NUMBER	FILING OR 371(C) DATE	FIRST NAMED APPLICANT	ATTY. DOCKET NO./TITLE
15/884,351	01/30/2018	Alexander Soto	UBI-002E

CONFIRMATION NO. 6829

93749
Alexander Soto
7673 Hazard Center Dr.
San Diego, CA 92108

PUBLICATION NOTICE

OC000000100461312

Title:SYSTEM AND METHOD FOR PERFORMING HIGH-SPEED COMMUNICATIONS OVER FIBER OPTICAL NETWORKS

Publication No.US-2018-0175963-A1
Publication Date:06/21/2018

NOTICE OF PUBLICATION OF APPLICATION

The above-identified application will be electronically published as a patent application publication pursuant to 37 CFR 1.211, et seq. The patent application publication number and publication date are set forth above.

The publication may be accessed through the USPTO's publically available Searchable Databases via the Internet at www.uspto.gov. The direct link to access the publication is currently http://www.uspto.gov/patft/.

The publication process established by the Office does not provide for mailing a copy of the publication to applicant. A copy of the publication may be obtained from the Office upon payment of the appropriate fee set forth in 37 CFR 1.19(a)(1). Orders for copies of patent application publications are handled by the USPTO's Public Records Division. The Public Records Division can be reached by telephone at (571) 272-3150 or (800) 972-6382, by facsimile at (571) 273-3250, by mail addressed to the United States Patent and Trademark Office, Public Records Division, Alexandria, VA 22313-1450 or via the Internet.

In addition, information on the status of the application, including the mailing date of Office actions and the dates of receipt of correspondence filed in the Office, may also be accessed via the Internet through the Patent Electronic Business Center at www.uspto.gov using the public side of the Patent Application Information and Retrieval (PAIR) system. The direct link to access this status information is currently https://portal.uspto.gov/pair/PublicPair. Prior to publication, such status information is confidential and may only be obtained by applicant using the private side of PAIR.

Further assistance in electronically accessing the publication, or about PAIR, is available by calling the Patent Electronic Business Center at 1-866-217-9197.

Office of Data Managment, Application Assistance Unit (571) 272-4000, or (571) 272-4200, or 1-888-786-0101

Electronic Patent Application Fee Transmittal

Application Number:	15884351
Filing Date:	30-Jan-2018
Title of Invention:	SYSTEM AND METHOD FOR PERFORMING HIGH-SPEED COMMUNICATIONS OVER FIBER OPTICAL NETWORKS
First Named Inventor/Applicant Name:	Alexander Soto
Filer:	Alexander Ivan Soto
Attorney Docket Number:	UBI-002E

Filed as Small Entity

Filing Fees for Utility under 35 USC 111(a)

Description	Fee Code	Quantity	Amount	Sub-Total in USD($)
Basic Filing:				
UTILITY SEARCH FEE	2111	1	330	330
Pages:				
Claims:				
Miscellaneous-Filing:				
LATE FILING FEE FOR OATH OR DECLARATION	2051	1	80	80
Petition:				
Patent-Appeals-and-Interference:				

Description	Fee Code	Quantity	Amount	Sub-Total in USD($)
Post-Allowance-and-Post-Issuance:				
Extension-of-Time:				
Miscellaneous:				
		Total in USD ($)		**410**

Electronic Acknowledgement Receipt

EFS ID:	32149180
Application Number:	15884351
International Application Number:	
Confirmation Number:	6829
Title of Invention:	SYSTEM AND METHOD FOR PERFORMING HIGH-SPEED COMMUNICATIONS OVER FIBER OPTICAL NETWORKS
First Named Inventor/Applicant Name:	Alexander Soto
Customer Number:	93749
Filer:	Alexander Ivan Soto
Filer Authorized By:	
Attorney Docket Number:	UBI-002E
Receipt Date:	25-MAR-2018
Filing Date:	30-JAN-2018
Time Stamp:	15:47:09
Application Type:	Utility under 35 USC 111(a)

Payment information:

Submitted with Payment	yes
Payment Type	CARD
Payment was successfully received in RAM	$410
RAM confirmation Number	032618INTEFSW15490800
Deposit Account	
Authorized User	
The Director of the USPTO is hereby authorized to charge indicated fees and credit any overpayment as follows:	

File Listing:

Document Number	Document Description	File Name	File Size(Bytes)/ Message Digest	Multi Part /.zip	Pages (if appl.)
1	Fee Worksheet (SB06)	fee-info.pdf	31784 3edcaeb1437aa23f0e7e7d978f0c08da12303c97	no	2

Warnings:

Information:

Total Files Size (in bytes):	31784

This Acknowledgement Receipt evidences receipt on the noted date by the USPTO of the indicated documents, characterized by the applicant, and including page counts, where applicable. It serves as evidence of receipt similar to a Post Card, as described in MPEP 503.

New Applications Under 35 U.S.C. 111
If a new application is being filed and the application includes the necessary components for a filing date (see 37 CFR 1.53(b)-(d) and MPEP 506), a Filing Receipt (37 CFR 1.54) will be issued in due course and the date shown on this Acknowledgement Receipt will establish the filing date of the application.
National Stage of an International Application under 35 U.S.C. 371
If a timely submission to enter the national stage of an international application is compliant with the conditions of 35 U.S.C. 371 and other applicable requirements a Form PCT/DO/EO/903 indicating acceptance of the application as a national stage submission under 35 U.S.C. 371 will be issued in addition to the Filing Receipt, in due course.
New International Application Filed with the USPTO as a Receiving Office
If a new international application is being filed and the international application includes the necessary components for an international filing date (see PCT Article 11 and MPEP 1810), a Notification of the International Application Number and of the International Filing Date (Form PCT/RO/105) will be issued in due course, subject to prescriptions concerning national security, and the date shown on this Acknowledgement Receipt will establish the international filing date of the application.

UNITED STATES PATENT AND TRADEMARK OFFICE

UNITED STATES DEPARTMENT OF COMMERCE
United States Patent and Trademark Office
Address: COMMISSIONER FOR PATENTS
P.O. Box 1450
Alexandria, Virginia 22313-1450
www.uspto.gov

APPLICATION NUMBER	FILING OR 371(C) DATE	FIRST NAMED APPLICANT	ATTY. DOCKET NO./TITLE
15/884,351	01/30/2018	Alexander Soto	UBI-002E

CONFIRMATION NO. 6829

93749
Alexander Soto
7673 Hazard Center Dr.
San Diego, CA 92108

FORMALITIES LETTER

OC000000098097213

Date Mailed: 03/16/2018

NOTICE TO FILE MISSING PARTS OF NONPROVISIONAL APPLICATION

FILED UNDER 37 CFR 1.53(b)

Filing Date Granted

Items Required To Avoid Abandonment:

An application number and filing date have been accorded to this application. The item(s) indicated below, however, are missing.

Applicant is given **TWO MONTHS** from the date of this Notice within which to file all required items below to avoid abandonment. Extensions of time may be obtained by filing a petition accompanied by the extension fee under the provisions of 37 CFR 1.136(a).

- The application search fee must be submitted.
- Surcharge as set forth in 37 CFR 1.16(f) must be submitted.
  The surcharge is due for any one of:
  - late submission of the basic filing fee, search fee, or examination fee,
  - late submission of inventor's oath or declaration,
  - filing an application that does not contain at least one claim on filing, or
  - submission of an application filed by reference to a previously filed application.

SUMMARY OF FEES DUE:

The fee(s) required within **TWO MONTHS** from the date of this Notice to avoid abandonment is/are itemized below. Small entity discount is in effect. If applicant is qualified for micro entity status, an acceptable Certification of Micro Entity Status must be submitted to establish micro entity status. (See 37 CFR 1.29 and forms PTO/SB/15A and 15B.)

- $ **80** surcharge.
- $ **330** search fee.
- $(**0**) previous unapplied payment amount.
- $ **410** TOTAL FEE BALANCE DUE.

Replies must be received in the USPTO within the set time period or must include a proper Certificate of Mailing or Transmission under 37 CFR 1.8 with a mailing or transmission date within the set time period. For more information and a suggested format, see Form PTO/SB/92 and MPEP 512.

Replies should be mailed to:

Mail Stop Missing Parts
Commissioner for Patents
P.O. Box 1450
Alexandria VA 22313-1450

Registered users of EFS-Web may alternatively submit their reply to this notice via EFS-Web, including a copy of this Notice and selecting the document description "Applicant response to Pre-Exam Formalities Notice". https://sportal.uspto.gov/authenticate/AuthenticateUserLocalEPF.html

For more information about EFS-Web please call the USPTO Electronic Business Center at 1-866-217-9197 or visit our website at http://www.uspto.gov/ebc.

If you are not using EFS-Web to submit your reply, you must include a copy of this notice.

Questions about the contents of this notice and the requirements it sets forth should be directed to the Office of Data Management, Application Assistance Unit, at **(571) 272-4000** or **(571) 272-4200** or **1-888-786-0101**.

/qtran/

UNITED STATES PATENT AND TRADEMARK OFFICE

UNITED STATES DEPARTMENT OF COMMERCE
United States Patent and Trademark Office
Address: COMMISSIONER FOR PATENTS
P.O. Box 1450
Alexandria, Virginia 22313-1450
www.uspto.gov

APPLICATION NUMBER	FILING or 371(c) DATE	GRP ART UNIT	FIL FEE REC'D	ATTY.DOCKET.NO	TOT CLAIMS	IND CLAIMS
15/884,351	01/30/2018	2636	605	UBI-002E	23	1

CONFIRMATION NO. 6829

FILING RECEIPT

93749
Alexander Soto
7673 Hazard Center Dr.
San Diego, CA 92108

OC000000098097212

Date Mailed: 03/16/2018

Receipt is acknowledged of this non-provisional patent application. The application will be taken up for examination in due course. Applicant will be notified as to the results of the examination. Any correspondence concerning the application must include the following identification information: the U.S. APPLICATION NUMBER, FILING DATE, NAME OF APPLICANT, and TITLE OF INVENTION. Fees transmitted by check or draft are subject to collection. Please verify the accuracy of the data presented on this receipt. **If an error is noted on this Filing Receipt, please submit a written request for a Filing Receipt Correction. Please provide a copy of this Filing Receipt with the changes noted thereon. If you received a "Notice to File Missing Parts" for this application, please submit any corrections to this Filing Receipt with your reply to the Notice. When the USPTO processes the reply to the Notice, the USPTO will generate another Filing Receipt incorporating the requested corrections**

Inventor(s)

Alexander Soto, San Diego, CA;
Walter Soto, Huntington Beach, CA;

Applicant(s)

Alexander Soto, San Diego, CA;
Walter Soto, Huntington Beach, CA;

Power of Attorney: None

Domestic Priority data as claimed by applicant

This application is a CON of 15/095,137 04/10/2016 PAT 9887795
which is a CON of 12/512,968 07/30/2009 PAT 9337948
which is a CIP of 11/772,187 06/30/2007 ABN
which is a CON of 10/865,547 06/10/2004 PAT 7242868
which claims benefit of 60/480,488 06/21/2003
and claims benefit of 60/477,845 06/10/2003

Foreign Applications for which priority is claimed (You may be eligible to benefit from the **Patent Prosecution Highway** program at the USPTO. Please see http://www.uspto.gov for more information.) - None.
Foreign application information must be provided in an Application Data Sheet in order to constitute a claim to foreign priority. See 37 CFR 1.55 and 1.76.

Permission to Access Application via Priority Document Exchange: Yes

Permission to Access Search Results: Yes

Applicant may provide or rescind an authorization for access using Form PTO/SB/39 or Form PTO/SB/69 as appropriate.

If Required, Foreign Filing License Granted: 03/15/2018
The country code and number of your priority application, to be used for filing abroad under the Paris Convention, is **US 15/884,351**
Projected Publication Date: 06/21/2018
Non-Publication Request: No
Early Publication Request: No
**** SMALL ENTITY ****
Title

SYSTEM AND METHOD FOR PERFORMING HIGH-SPEED COMMUNICATIONS OVER FIBER OPTICAL NETWORKS

Preliminary Class

398

Statement under 37 CFR 1.55 or 1.78 for AIA (First Inventor to File) Transition Applications: No

PROTECTING YOUR INVENTION OUTSIDE THE UNITED STATES

Since the rights granted by a U.S. patent extend only throughout the territory of the United States and have no effect in a foreign country, an inventor who wishes patent protection in another country must apply for a patent in a specific country or in regional patent offices. Applicants may wish to consider the filing of an international application under the Patent Cooperation Treaty (PCT). An international (PCT) application generally has the same effect as a regular national patent application in each PCT-member country. The PCT process **simplifies** the filing of patent applications on the same invention in member countries, but **does not result** in a grant of "an international patent" and does not eliminate the need of applicants to file additional documents and fees in countries where patent protection is desired.

Almost every country has its own patent law, and a person desiring a patent in a particular country must make an application for patent in that country in accordance with its particular laws. Since the laws of many countries differ in various respects from the patent law of the United States, applicants are advised to seek guidance from specific foreign countries to ensure that patent rights are not lost prematurely.

Applicants also are advised that in the case of inventions made in the United States, the Director of the USPTO must issue a license before applicants can apply for a patent in a foreign country. The filing of a U.S. patent application serves as a request for a foreign filing license. The application's filing receipt contains further information and guidance as to the status of applicant's license for foreign filing.

Applicants may wish to consult the USPTO booklet, "General Information Concerning Patents" (specifically, the section entitled "Treaties and Foreign Patents") for more information on timeframes and deadlines for filing foreign patent applications. The guide is available either by contacting the USPTO Contact Center at 800-786-9199, or it can be viewed on the USPTO website at http://www.uspto.gov/web/offices/pac/doc/general/index.html.

For information on preventing theft of your intellectual property (patents, trademarks and copyrights), you may wish to consult the U.S. Government website, http://www.stopfakes.gov. Part of a Department of Commerce initiative, this website includes self-help "toolkits" giving innovators guidance on how to protect intellectual property in specific

countries such as China, Korea and Mexico. For questions regarding patent enforcement issues, applicants may call the U.S. Government hotline at 1-866-999-HALT (1-866-999-4258).

LICENSE FOR FOREIGN FILING UNDER

Title 35, United States Code, Section 184

Title 37, Code of Federal Regulations, 5.11 & 5.15

GRANTED

The applicant has been granted a license under 35 U.S.C. 184, if the phrase "IF REQUIRED, FOREIGN FILING LICENSE GRANTED" followed by a date appears on this form. Such licenses are issued in all applications where the conditions for issuance of a license have been met, regardless of whether or not a license may be required as set forth in 37 CFR 5.15. The scope and limitations of this license are set forth in 37 CFR 5.15(a) unless an earlier license has been issued under 37 CFR 5.15(b). The license is subject to revocation upon written notification. The date indicated is the effective date of the license, unless an earlier license of similar scope has been granted under 37 CFR 5.13 or 5.14.

This license is to be retained by the licensee and may be used at any time on or after the effective date thereof unless it is revoked. This license is automatically transferred to any related applications(s) filed under 37 CFR 1.53(d). This license is not retroactive.

The grant of a license does not in any way lessen the responsibility of a licensee for the security of the subject matter as imposed by any Government contract or the provisions of existing laws relating to espionage and the national security or the export of technical data. Licensees should apprise themselves of current regulations especially with respect to certain countries, of other agencies, particularly the Office of Defense Trade Controls, Department of State (with respect to Arms, Munitions and Implements of War (22 CFR 121-128)); the Bureau of Industry and Security, Department of Commerce (15 CFR parts 730-774); the Office of Foreign AssetsControl, Department of Treasury (31 CFR Parts 500+) and the Department of Energy.

NOT GRANTED

No license under 35 U.S.C. 184 has been granted at this time, if the phrase "IF REQUIRED, FOREIGN FILING LICENSE GRANTED" DOES NOT appear on this form. Applicant may still petition for a license under 37 CFR 5.12, if a license is desired before the expiration of 6 months from the filing date of the application. If 6 months has lapsed from the filing date of this application and the licensee has not received any indication of a secrecy order under 35 U.S.C. 181, the licensee may foreign file the application pursuant to 37 CFR 5.15(b).

SelectUSA

The United States represents the largest, most dynamic marketplace in the world and is an unparalleled location for business investment, innovation, and commercialization of new technologies. The U.S. offers tremendous resources and advantages for those who invest and manufacture goods here. Through SelectUSA, our nation works to promote and facilitate business investment. SelectUSA provides information assistance to the international investor community; serves as an ombudsman for existing and potential investors; advocates on behalf of U.S. cities, states, and regions competing for global investment; and counsels U.S. economic development organizations on investment attraction best practices. To learn more about why the United States is the best country in the world to develop

technology, manufacture products, deliver services, and grow your business, visit http://www.SelectUSA.gov or call +1-202-482-6800.

PATENT APPLICATION FEE DETERMINATION RECORD

Substitute for Form PTO-875

Application or Docket Number
15/884,351

APPLICATION AS FILED - PART I

FOR	(Column 1) NUMBER FILED	(Column 2) NUMBER EXTRA	SMALL ENTITY RATE($)	SMALL ENTITY FEE($)	OR	OTHER THAN SMALL ENTITY RATE($)	OTHER THAN SMALL ENTITY FEE($)
BASIC FEE (37 CFR 1.16(a), (b), or (c))	N/A	N/A	N/A	75		N/A	
SEARCH FEE (37 CFR 1.16(k), (i), or (m))	N/A	N/A	N/A	330		N/A	
EXAMINATION FEE (37 CFR 1.16(o), (p), or (q))	N/A	N/A	N/A	380		N/A	
TOTAL CLAIMS (37 CFR 1.16(i))	23 minus 20 =	* 3	x 50 =	150	OR		
INDEPENDENT CLAIMS (37 CFR 1.16(h))	1 minus 3 =	*	x 230 =	0.00			
APPLICATION SIZE FEE (37 CFR 1.16(s))	If the specification and drawings exceed 100 sheets of paper, the application size fee due is $310 ($155 for small entity) for each additional 50 sheets or fraction thereof. See 35 U.S.C. 41(a)(1)(G) and 37 CFR 1.16(s).			0.00			
MULTIPLE DEPENDENT CLAIM PRESENT (37 CFR 1.16(j))				0.00			
* If the difference in column 1 is less than zero, enter "0" in column 2.			TOTAL	935		TOTAL	

APPLICATION AS AMENDED - PART II

		(Column 1) CLAIMS REMAINING AFTER AMENDMENT		(Column 2) HIGHEST NUMBER PREVIOUSLY PAID FOR	(Column 3) PRESENT EXTRA	SMALL ENTITY RATE($)	SMALL ENTITY ADDITIONAL FEE($)	OR	OTHER THAN SMALL ENTITY RATE($)	OTHER THAN SMALL ENTITY ADDITIONAL FEE($)
AMENDMENT A	Total (37 CFR 1.16(i))	*	Minus	**	=	x =		OR	x =	
AMENDMENT A	Independent (37 CFR 1.16(h))	*	Minus	***	=	x =		OR	x =	
AMENDMENT A	Application Size Fee (37 CFR 1.16(s))									
AMENDMENT A	FIRST PRESENTATION OF MULTIPLE DEPENDENT CLAIM (37 CFR 1.16(j))							OR		
						TOTAL ADD'L FEE		OR	TOTAL ADD'L FEE	

		(Column 1) CLAIMS REMAINING AFTER AMENDMENT		(Column 2) HIGHEST NUMBER PREVIOUSLY PAID FOR	(Column 3) PRESENT EXTRA	RATE($)	ADDITIONAL FEE($)	OR	RATE($)	ADDITIONAL FEE($)
AMENDMENT B	Total (37 CFR 1.16(i))	*	Minus	**	=	x =		OR	x =	
AMENDMENT B	Independent (37 CFR 1.16(h))	*	Minus	***	=	x =		OR	x =	
AMENDMENT B	Application Size Fee (37 CFR 1.16(s))									
AMENDMENT B	FIRST PRESENTATION OF MULTIPLE DEPENDENT CLAIM (37 CFR 1.16(j))							OR		
						TOTAL ADD'L FEE		OR	TOTAL ADD'L FEE	

* If the entry in column 1 is less than the entry in column 2, write "0" in column 3.
** If the "Highest Number Previously Paid For" IN THIS SPACE is less than 20, enter "20".
*** If the "Highest Number Previously Paid For" IN THIS SPACE is less than 3, enter "3".
The "Highest Number Previously Paid For" (Total or Independent) is the highest found in the appropriate box in column 1.

ABSTRACT

Processing a received optical signal in an optical communication network includes equalizing a received optical signal to provide an equalized signal, demodulating the equalized signal according to an m-ary modulation format to provide a demodulated signal, decoding the demodulated signal according to an inner code to provide an inner-decoded signal, and decoding the inner-decoded signal according to an outer code. Other aspects include other features such as equalizing an optical channel including storing channel characteristics for the optical channel associated with a client, loading the stored channel characteristics during a waiting period between bursts on the channel, and equalizing a received burst from the client using the loaded channel characteristics.

Under the Paperwork Reduction Act of 1995, no persons are required to respond to a collection of information unless it contains a valid OMB control number.

Application Data Sheet 37 CFR 1.76	Attorney Docket Number	UBI-002E
	Application Number	
Title of Invention	SYSTEM AND METHOD FOR PERFORMING HIGH-SPEED COMMUNICATIONS OVER FIBER OPTICAL NETWORKS	

The application data sheet is part of the provisional or nonprovisional application for which it is being submitted. The following form contains the bibliographic data arranged in a format specified by the United States Patent and Trademark Office as outlined in 37 CFR 1.76.
This document may be completed electronically and submitted to the Office in electronic format using the Electronic Filing System (EFS) or the document may be printed and included in a paper filed application.

Secrecy Order 37 CFR 5.2:

☐ Portions or all of the application associated with this Application Data Sheet may fall under a Secrecy Order pursuant to 37 CFR 5.2 (Paper filers only. Applications that fall under Secrecy Order may not be filed electronically.)

Inventor Information:

Inventor 1 Remove

Legal Name

Prefix	Given Name	Middle Name	Family Name	Suffix
	Alexander		Soto	

Residence Information (Select One) ● US Residency Non US Residency Active US Military Service

City	San Diego	State/Province	CA	Country of Residence i	US

Mailing Address of Inventor:

Address 1	7673 Hazard Center Dr		
Address 2			
City	San Diego	State/Province	CA
Postal Code	92108	Country i	US

Inventor 2 Remove

Legal Name

Prefix	Given Name	Middle Name	Family Name	Suffix
	Walter		Soto	

Residence Information (Select One) ◉ US Residency Non US Residency Active US Military Service

City	Huntington Beach	State/Province	CA	Country of Residence i	US

Mailing Address of Inventor:

Address 1	7461 Edinger Ave		
Address 2	Unit 410		
City	Huntington Beach	State/Province	CA
Postal Code	92647	Country i	US

All Inventors Must Be Listed - Additional Inventor Information blocks may be generated within this form by selecting the **Add** button. Add

Correspondence Information:

Enter either Customer Number or complete the Correspondence Information section below.
For further information see 37 CFR 1.33(a).

PTO/AIA/14 (11-15)
Approved for use through 04/30/2017. OMB 0651-0032
U.S. Patent and Trademark Office; U.S. DEPARTMENT OF COMMERCE
Under the Paperwork Reduction Act of 1995, no persons are required to respond to a collection of information unless it contains a valid OMB control number.

Application Data Sheet 37 CFR 1.76	Attorney Docket Number	UBI-002E
	Application Number	
Title of Invention	SYSTEM AND METHOD FOR PERFORMING HIGH-SPEED COMMUNICATIONS OVER FIBER OPTICAL NETWORKS	

☐ **An Address is being provided for the correspondence Information of this application.**

Customer Number	93749		
Email Address	alexander.i.soto@gmail.com	Add Email	Remove Email

Application Information:

Title of the Invention	SYSTEM AND METHOD FOR PERFORMING HIGH-SPEED COMMUNICATIONS OVER FIBER OPTICAL NETWORKS		
Attorney Docket Number	UBI-002E	**Small Entity Status Claimed**	☒
Application Type	Nonprovisional		
Subject Matter	Utility		
Total Number of Drawing Sheets (if any)	9	**Suggested Figure for Publication (if any)**	6B

Filing By Reference:

Only complete this section when filing an application by reference under 35 U.S.C. 111(c) and 37 CFR 1.57(a). Do not complete this section if application papers including a specification and any drawings are being filed. Any domestic benefit or foreign priority information must be provided in the appropriate section(s) below (i.e., "Domestic Benefit/National Stage Information" and "Foreign Priority Information").

For the purposes of a filing date under 37 CFR 1.53(b), the description and any drawings of the present application are replaced by this reference to the previously filed application, subject to conditions and requirements of 37 CFR 1.57(a).

Application number of the previously filed application	Filing date (YYYY-MM-DD)	Intellectual Property Authority or Country

Publication Information:

☐ Request Early Publication (Fee required at time of Request 37 CFR 1.219)

☐ **Request Not to Publish.** I hereby request that the attached application not be published under 35 U.S.C. 122(b) and certify that the invention disclosed in the attached application **has not and will not** be the subject of an application filed in another country, or under a multilateral international agreement, that requires publication at eighteen months after filing.

Representative Information:

Representative information should be provided for all practitioners having a power of attorney in the application. Providing this information in the Application Data Sheet does not constitute a power of attorney in the application (see 37 CFR 1.32).
Either enter Customer Number or complete the Representative Name section below. If both sections are completed the customer Number will be used for the Representative Information during processing.

Please Select One:	● Customer Number	US Patent Practitioner	○ Limited Recognition (37 CFR 11.9)
Customer Number	93749		

Application Data Sheet 37 CFR 1.76	Attorney Docket Number	UBI-002E
	Application Number	
Title of Invention	SYSTEM AND METHOD FOR PERFORMING HIGH-SPEED COMMUNICATIONS OVER FIBER OPTICAL NETWORKS	

Domestic Benefit/National Stage Information:

This section allows for the applicant to either claim benefit under 35 U.S.C. 119(e), 120, 121, 365(c), or 386(c) or indicate National Stage entry from a PCT application. Providing benefit claim information in the Application Data Sheet constitutes the specific reference required by 35 U.S.C. 119(e) or 120, and 37 CFR 1.78.
When referring to the current application, please leave the "Application Number" field blank.

Prior Application Status	Pending		Remove
Application Number	Continuity Type	Prior Application Number	Filing or 371(c) Date (YYYY-MM-DD)
	Continuation of	15095137	2016-04-10

Prior Application Status	Patented				Remove
Application Number	Continuity Type	Prior Application Number	Filing Date (YYYY-MM-DD)	Patent Number	Issue Date (YYYY-MM-DD)
15095137	Continuation of	12512968	2009-07-30	9337948	2016-05-10

Prior Application Status	Abandoned		Remove
Application Number	Continuity Type	Prior Application Number	Filing or 371(c) Date (YYYY-MM-DD)
12512968	Continuation in part of	11772187	2007-06-30

Prior Application Status	Patented				Remove
Application Number	Continuity Type	Prior Application Number	Filing Date (YYYY-MM-DD)	Patent Number	Issue Date (YYYY-MM-DD)
11772187	Continuation of	10865547	2004-06-10	7242868	2007-07-10

Prior Application Status	Expired		Remove
Application Number	Continuity Type	Prior Application Number	Filing or 371(c) Date (YYYY-MM-DD)
10865547	Claims benefit of provisional	60480488	2003-06-21

Prior Application Status	Expired		Remove
Application Number	Continuity Type	Prior Application Number	Filing or 371(c) Date (YYYY-MM-DD)
10865547	Claims benefit of provisional	60477845	2003-06-10

Additional Domestic Benefit/National Stage Data may be generated within this form by selecting the **Add** button. Add

Foreign Priority Information:

Under the Paperwork Reduction Act of 1995, no persons are required to respond to a collection of information unless it contains a valid OMB control number.

Application Data Sheet 37 CFR 1.76	Attorney Docket Number	UBI-002E
	Application Number	
Title of Invention	SYSTEM AND METHOD FOR PERFORMING HIGH-SPEED COMMUNICATIONS OVER FIBER OPTICAL NETWORKS	

This section allows for the applicant to claim priority to a foreign application. Providing this information in the application data sheet constitutes the claim for priority as required by 35 U.S.C. 119(b) and 37 CFR 1.55. When priority is claimed to a foreign application that is eligible for retrieval under the priority document exchange program (PDX)[i] the information will be used by the Office to automatically attempt retrieval pursuant to 37 CFR 1.55(i)(1) and (2). Under the PDX program, applicant bears the ultimate responsibility for ensuring that a copy of the foreign application is received by the Office from the participating foreign intellectual property office, or a certified copy of the foreign priority application is filed, within the time period specified in 37 CFR 1.55(g)(1).

Remove

Application Number	Country[i]	Filing Date (YYYY-MM-DD)	Access Code[i] (if applicable)

Additional Foreign Priority Data may be generated within this form by selecting the **Add** button. Add

Statement under 37 CFR 1.55 or 1.78 for AIA (First Inventor to File) Transition Applications

☐ This application (1) claims priority to or the benefit of an application filed before March 16, 2013 and (2) also contains, or contained at any time, a claim to a claimed invention that has an effective filing date on or after March 16, 2013.
NOTE: By providing this statement under 37 CFR 1.55 or 1.78, this application, with a filing date on or after March 16, 2013, will be examined under the first inventor to file provisions of the AIA.

Application Data Sheet 37 CFR 1.76	Attorney Docket Number	UBI-002E
	Application Number	
Title of Invention	SYSTEM AND METHOD FOR PERFORMING HIGH-SPEED COMMUNICATIONS OVER FIBER OPTICAL NETWORKS	

Authorization or Opt-Out of Authorization to Permit Access:

When this Application Data Sheet is properly signed and filed with the application, applicant has provided written authority to permit a participating foreign intellectual property (IP) office access to the instant application-as-filed (see paragraph A in subsection 1 below) and the European Patent Office (EPO) access to any search results from the instant application (see paragraph B in subsection 1 below).

Should applicant choose not to provide an authorization identified in subsection 1 below, applicant **must opt-out** of the authorization by checking the corresponding box A or B or both in subsection 2 below.

NOTE: This section of the Application Data Sheet is **ONLY** reviewed and processed with the **INITIAL** filing of an application. After the initial filing of an application, an Application Data Sheet cannot be used to provide or rescind authorization for access by a foreign IP office(s). Instead, Form PTO/SB/39 or PTO/SB/69 must be used as appropriate.

1. Authorization to Permit Access by a Foreign Intellectual Property Office(s)

A. Priority Document Exchange (PDX) - Unless box A in subsection 2 (opt-out of authorization) is checked, the undersigned hereby **grants the USPTO authority** to provide the European Patent Office (EPO), the Japan Patent Office (JPO), the Korean Intellectual Property Office (KIPO), the State Intellectual Property Office of the People's Republic of China (SIPO), the World Intellectual Property Organization (WIPO), and any other foreign intellectual property office participating with the USPTO in a bilateral or multilateral priority document exchange agreement in which a foreign application claiming priority to the instant patent application is filed, access to: (1) the instant patent application-as-filed and its related bibliographic data, (2) any foreign or domestic application to which priority or benefit is claimed by the instant application and its related bibliographic data, and (3) the date of filing of this Authorization. See 37 CFR 1.14(h)(1).

B. Search Results from U.S. Application to EPO - Unless box B in subsection 2 (opt-out of authorization) is checked, the undersigned hereby **grants the USPTO authority** to provide the EPO access to the bibliographic data and search results from the instant patent application when a European patent application claiming priority to the instant patent application is filed. See 37 CFR 1.14(h)(2).

The applicant is reminded that the EPO's Rule 141(1) EPC (European Patent Convention) requires applicants to submit a copy of search results from the instant application without delay in a European patent application that claims priority to the instant application.

2. Opt-Out of Authorizations to Permit Access by a Foreign Intellectual Property Office(s)

☐ A. Applicant **DOES NOT** authorize the USPTO to permit a participating foreign IP office access to the instant application-as-filed. If this box is checked, the USPTO will not be providing a participating foreign IP office with any documents and information identified in subsection 1A above.

☐ B. Applicant **DOES NOT** authorize the USPTO to transmit to the EPO any search results from the instant patent application. If this box is checked, the USPTO will not be providing the EPO with search results from the instant application.

NOTE: Once the application has published or is otherwise publicly available, the USPTO may provide access to the application in accordance with 37 CFR 1.14.

Under the Paperwork Reduction Act of 1995, no persons are required to respond to a collection of information unless it contains a valid OMB control number.

Application Data Sheet 37 CFR 1.76	Attorney Docket Number	UBI-002E
	Application Number	
Title of Invention	SYSTEM AND METHOD FOR PERFORMING HIGH-SPEED COMMUNICATIONS OVER FIBER OPTICAL NETWORKS	

Applicant Information:

Providing assignment information in this section does not substitute for compliance with any requirement of part 3 of Title 37 of CFR to have an assignment recorded by the Office.

Applicant 1 Remove

If the applicant is the inventor (or the remaining joint inventor or inventors under 37 CFR 1.45), this section should not be completed. The information to be provided in this section is the name and address of the legal representative who is the applicant under 37 CFR 1.43; or the name and address of the assignee, person to whom the inventor is under an obligation to assign the invention, or person who otherwise shows sufficient proprietary interest in the matter who is the applicant under 37 CFR 1.46. If the applicant is an applicant under 37 CFR 1.46 (assignee, person to whom the inventor is obligated to assign, or person who otherwise shows sufficient proprietary interest) together with one or more joint inventors, then the joint inventor or inventors who are also the applicant should be identified in this section.

Clear

Assignee	Legal Representative under 35 U.S.C. 117	Joint Inventor
Person to whom the inventor is obligated to assign.	Person who shows sufficient proprietary interest	

If applicant is the legal representative, indicate the authority to file the patent application, the inventor is:

Name of the Deceased or Legally Incapacitated Inventor:

If the Applicant is an Organization check here. ☐

Prefix	**Given Name**	Middle Name	**Family Name**	Suffix

Mailing Address Information For Applicant:

Address 1			
Address 2			
City		**State/Province**	
Country		Postal Code	
Phone Number		Fax Number	
Email Address			

Additional Applicant Data may be generated within this form by selecting the Add button. Add

Assignee Information including Non-Applicant Assignee Information:

Providing assignment information in this section does not substitute for compliance with any requirement of part 3 of Title 37 of CFR to have an assignment recorded by the Office.

Under the Paperwork Reduction Act of 1995, no persons are required to respond to a collection of information unless it contains a valid OMB control number.

Application Data Sheet 37 CFR 1.76	Attorney Docket Number	UBI-002E
	Application Number	
Title of Invention	SYSTEM AND METHOD FOR PERFORMING HIGH-SPEED COMMUNICATIONS OVER FIBER OPTICAL NETWORKS	

Assignee 1

Complete this section if assignee information, including non-applicant assignee information, is desired to be included on the patent application publication. An assignee-applicant identified in the "Applicant Information" section will appear on the patent application publication as an applicant. For an assignee-applicant, complete this section only if identification as an assignee is also desired on the patent application publication.

Remove

If the Assignee or Non-Applicant Assignee is an Organization check here. ☐

Prefix	**Given Name**	Middle Name	**Family Name**	Suffix

Mailing Address Information For Assignee including Non-Applicant Assignee:

Address 1			
Address 2			
City		**State/Province**	
Country i		Postal Code	
Phone Number		Fax Number	
Email Address			

Additional Assignee or Non-Applicant Assignee Data may be generated within this form by selecting the Add button. Add

Signature:

Remove

NOTE: This Application Data Sheet must be signed in accordance with 37 CFR 1.33(b). **However, if this Application Data Sheet is submitted with the INITIAL filing of the application and either box A or B is not checked in subsection 2 of the "Authorization or Opt-Out of Authorization to Permit Access" section, then this form must also be signed in accordance with 37 CFR 1.14(c).**

This Application Data Sheet **must** be signed by a patent practitioner if one or more of the applicants is a **juristic entity** (e.g., corporation or association). If the applicant is two or more joint inventors, this form must be signed by a patent practitioner, **all** joint inventors who are the applicant, or one or more joint inventor-applicants who have been given power of attorney (e.g., see USPTO Form PTO/AIA/81) on behalf of **all** joint inventor-applicants.

See 37 CFR 1.4(d) for the manner of making signatures and certifications.

Signature	/Alexander Soto/			Date (YYYY-MM-DD)	2018-01-24
First Name	Alexander	Last Name	Soto	Registration Number	

Additional Signature may be generated within this form by selecting the Add button. Add

Application Data Sheet 37 CFR 1.76	Attorney Docket Number	UBI-002E
	Application Number	
Title of Invention	SYSTEM AND METHOD FOR PERFORMING HIGH-SPEED COMMUNICATIONS OVER FIBER OPTICAL NETWORKS	

Signature:

Remove

NOTE: This Application Data Sheet must be signed in accordance with 37 CFR 1.33(b). **However, if this Application Data Sheet is submitted with the INITIAL filing of the application and either box A or B is not checked in subsection 2 of the "Authorization or Opt-Out of Authorization to Permit Access" section, then this form must also be signed in accordance with 37 CFR 1.14(c).**

This Application Data Sheet **must** be signed by a patent practitioner if one or more of the applicants is a **juristic entity** (e.g., corporation or association). If the applicant is two or more joint inventors, this form must be signed by a patent practitioner, **all** joint inventors who are the applicant, or one or more joint inventor-applicants who have been given power of attorney (e.g., see USPTO Form PTO/AIA/81) on behalf of **all** joint inventor-applicants.

See 37 CFR 1.4(d) for the manner of making signatures and certifications.

Signature	/Walter Soto/			Date (YYYY-MM-DD)	2018-01-24
First Name	Walter	Last Name	Soto	Registration Number	

Additional Signature may be generated within this form by selecting the Add button. Add

This collection of information is required by 37 CFR 1.76. The information is required to obtain or retain a benefit by the public which is to file (and by the USPTO to process) an application. Confidentiality is governed by 35 U.S.C. 122 and 37 CFR 1.14. This collection is estimated to take 23 minutes to complete, including gathering, preparing, and submitting the completed application data sheet form to the USPTO. Time will vary depending upon the individual case. Any comments on the amount of time you require to complete this form and/or suggestions for reducing this burden, should be sent to the Chief Information Officer, U.S. Patent and Trademark Office, U.S. Department of Commerce, P.O. Box 1450, Alexandria, VA 22313-1450. DO NOT SEND FEES OR COMPLETED FORMS TO THIS ADDRESS. **SEND TO: Commissioner for Patents, P.O. Box 1450, Alexandria, VA 22313-1450.**

Privacy Act Statement

The Privacy Act of 1974 (P.L. 93-579) requires that you be given certain information in connection with your submission of the attached form related to a patent application or patent. Accordingly, pursuant to the requirements of the Act, please be advised that: (1) the general authority for the collection of this information is 35 U.S.C. 2(b)(2); (2) furnishing of the information solicited is voluntary; and (3) the principal purpose for which the information is used by the U.S. Patent and Trademark Office is to process and/or examine your submission related to a patent application or patent. If you do not furnish the requested information, the U.S. Patent and Trademark Office may not be able to process and/or examine your submission, which may result in termination of proceedings or abandonment of the application or expiration of the patent.

The information provided by you in this form will be subject to the following routine uses:

1 The information on this form will be treated confidentially to the extent allowed under the Freedom of Information Act (5 U.S.C. 552) and the Privacy Act (5 U.S.C. 552a). Records from this system of records may be disclosed to the Department of Justice to determine whether the Freedom of Information Act requires disclosure of these records.

2. A record from this system of records may be disclosed, as a routine use, in the course of presenting evidence to a court, magistrate, or administrative tribunal, including disclosures to opposing counsel in the course of settlement negotiations.

3 A record in this system of records may be disclosed, as a routine use, to a Member of Congress submitting a request involving an individual, to whom the record pertains, when the individual has requested assistance from the Member with respect to the subject matter of the record.

4. A record in this system of records may be disclosed, as a routine use, to a contractor of the Agency having need for the information in order to perform a contract. Recipients of information shall be required to comply with the requirements of the Privacy Act of 1974, as amended, pursuant to 5 U.S.C. 552a(m).

5. A record related to an International Application filed under the Patent Cooperation Treaty in this system of records may be disclosed, as a routine use, to the International Bureau of the World Intellectual Property Organization, pursuant to the Patent CooperationTreaty.

6. A record in this system of records may be disclosed, as a routine use, to another federal agency for purposes of National Security review (35 U.S.C. 181) and for review pursuant to the Atomic Energy Act (42 U.S.C. 218(c)).

7. A record from this system of records may be disclosed, as a routine use, to the Administrator, General Services, or his/her designee, during an inspection of records conducted by GSA as part of that agency's responsibility to recommend improvements in records management practices and programs, under authority of 44 U.S.C. 2904 and 2906. Such disclosure shall be made in accordance with the GSA regulations governing inspection of records for this purpose, and any other relevant (i.e., GSA or Commerce) directive. Such disclosure shall not be used to make determinations about individuals.

8. A record from this system of records may be disclosed, as a routine use, to the public after either publication of the application pursuant to 35 U.S.C. 122(b) or issuance of a patent pursuant to 35 U.S.C. 151. Further, a record may be disclosed, subject to the limitations of 37 CFR 1.14, as a routine use, to the public if the record was filed in an application which became abandoned or in which the proceedings were terminated and which application is referenced by either a published application, an application open to public inspections or an issued patent.

9. A record from this system of records may be disclosed, as a routine use, to a Federal, State, or local law enforcement agency, if the USPTO becomes aware of a violation or potential violation of law or regulation.

What is claimed is:

1.) A pluggable optical transceiver module comprising of:

an electrical system interface for receiving a first electrical data signal and for transmitting a second electrical data signal, and

an encoder unit for coding the first electrical data signal according to an error correcting code to produce a first electrical encoded data signal, and

an m-ary modulator for increasing the number of bits per symbol in the first electrical encoded data signal to produce a first m-ary modulation signal, and

a digital to analog converter for converting the first m-ary modulation signal to a first electrical m-ary analog modulation signal, and

a driver for amplifying the first electrical m-ary analog modulation signal to an amplified first electrical m-ary analog modulation signal to drive an optical transmitter, and

the optical transmitter for emitting a first optical signal on a first wavelength responsive to and representative of the amplified first electrical m-ary analog modulation signal from the driver, and

an optical detector for receiving a second optical signal on a second wavelength and producing an electrical analog signal, and

an amplifier for amplifying the electrical analog signal to an amplified electrical analog signal, and

a clock data recovery unit for recovering clock and data information to produce a second m-ary modulation signal from the amplified electrical analog signal, and

an equalizer for performing equalization on the second m-ary modulation signal to remove noise, and

an m-ary demodulator for decreasing the number of bits per symbol in the equalized second m-ary modulation signal to produce a second electrical encoded data signal, and

a decoder unit for decoding the second electrical encoded data signal according to an error correcting code to produce the second electrical data signal.

2.) The pluggable optical transceiver module of claim 1, wherein the form factor of the pluggable optical transceiver module is a pluggable form factor standard.

3.) The pluggable optical transceiver module of claim 2, wherein the pluggable form factor standard of the pluggable optical transceiver module is a small form factor pluggable (SFP) or SFP+ form factor standard.

4.) The pluggable optical transceiver module of claim 2, wherein the pluggable form factor standard of the pluggable optical transceiver module is an XFP form factor standard.

5.) The pluggable optical transceiver module of claim 1, wherein the m-ary modulator and the m-ary demodulator perform m-ary pulse amplitude modulation and de-modulation, respectively, that uses two or more bits per symbol for communication.

6.) The pluggable optical transceiver module of claim 1, wherein the m-ary modulator and the m-ary demodulator perform m-ary quadrature amplitude modulation and de-modulation, respectively, that uses two or more bits per symbol for communication.

7.) The pluggable optical transceiver module of claim 1, wherein the m-ary modulator and the m-ary demodulator perform m-ary quadrature phase shift keying modulation and de-modulation, respectively, that uses two or more bits per symbol for communication.

8.) The pluggable optical transceiver module of claim 1, whereby the m-ary modulator and the m-ary demodulator perform orthogonal frequency division multiplexing modulation and de-modulation, respectively, that uses two or more bits per symbol for communication.

9.) The pluggable optical transceiver module of claim 1, wherein the electrical system interface includes parallel signals.

10.) The pluggable optical transceiver module of claim 1, wherein the electrical system interface includes serial signals.

11.) The pluggable optical transceiver module of claim 1, wherein the first electrical data signal and second electrical data signal includes parallel electrical data signals.

12.) The pluggable optical transceiver module of claim 1, wherein the first optical signal on a first wavelength is configured to emit into a first optical fiber and the second optical signal on a second wavelength is configured to be received from the first optical fiber.

13.) The pluggable optical transceiver module of claim 1, wherein the first optical signal on a first wavelength is configured to emit into a first optical fiber and the second optical signal on a second wavelength is configured to be received from a second optical fiber.

14.) The pluggable optical transceiver module of claim 1, wherein the equalizer includes coefficients or weights adapted to remove noise from the second m-ary modulation signal.

15.) The pluggable optical transceiver module of claim 1, wherein the noise removed by the equalizer includes intersymbol interference (ISI).

16.) The pluggable optical transceiver module of claim 1, wherein the equalizer performs decision directed equalization on the second m-ary modulation signal to remove noise.

17.) The pluggable optical transceiver module of claim 1, wherein the equalizer performs blind equalization on the second m-ary modulation signal to remove noise.

18.) The pluggable optical transceiver module of claim 1, wherein the error correcting code includes a convolutional code.

19.) The pluggable optical transceiver module of claim 1, wherein the error correcting code includes a forward error correcting (FEC) code.

20.) The pluggable optical transceiver module of claim 1, wherein the error correcting code includes a Reed-Solomon code.

21.) The pluggable optical transceiver module of claim 1, wherein the electrical system interface includes receiving a third electrical data signal and transmitting a forth electrical data signal and the pluggable optical transceiver module further includes:

a second encoder unit for coding the third electrical data signal according to an error correcting code to produce a third electrical encoded data signal, and

a second m-ary modulator for increasing the number of bits per symbol in the third electrical encoded data signal to produce a third m-ary modulation signal, and

a second digital to analog converter for converting the third m-ary modulation signal to a second electrical m-ary analog modulation signal, and

a second driver for amplifying the second electrical m-ary analog modulation signal to an amplified second electrical m-ary analog modulation signal to drive a second optical transmitter, and

the second optical transmitter for emitting a third optical signal on a third wavelength responsive to and representative of the amplified second electrical m-ary analog modulation signal from the second driver, and

a second optical detector for receiving a forth optical signal on a forth wavelength and producing a second electrical analog signal, and

a second amplifier for amplifying the second electrical analog signal to an amplified second electrical analog signal, and

a second clock data recovery unit for recovering clock and data information to produce a forth m-ary modulation signal from the amplified second electrical analog signal, and

a second equalizer for performing equalization on the forth m-ary modulation signal to remove noise, and

a second m-ary demodulator for decreasing the number of bits per symbol in the equalized forth m-ary modulation signal to produce a forth electrical encoded data signal, and

a second decoder unit for decoding the forth electrical encoded data signal according to an error correcting code to produce the forth electrical data signal.

22.) The pluggable optical transceiver module of claim 21, wherein the third optical signal on a third wavelength is configured to emit into a first optical fiber and the forth optical signal on a forth wavelength is configured to be received from the first optical fiber.

23.) The pluggable optical transceiver module of claim 21, wherein the third optical signal on a third wavelength is configured to emit into a first optical fiber and the forth optical signal on a forth wavelength is configured to be received from a second optical fiber.

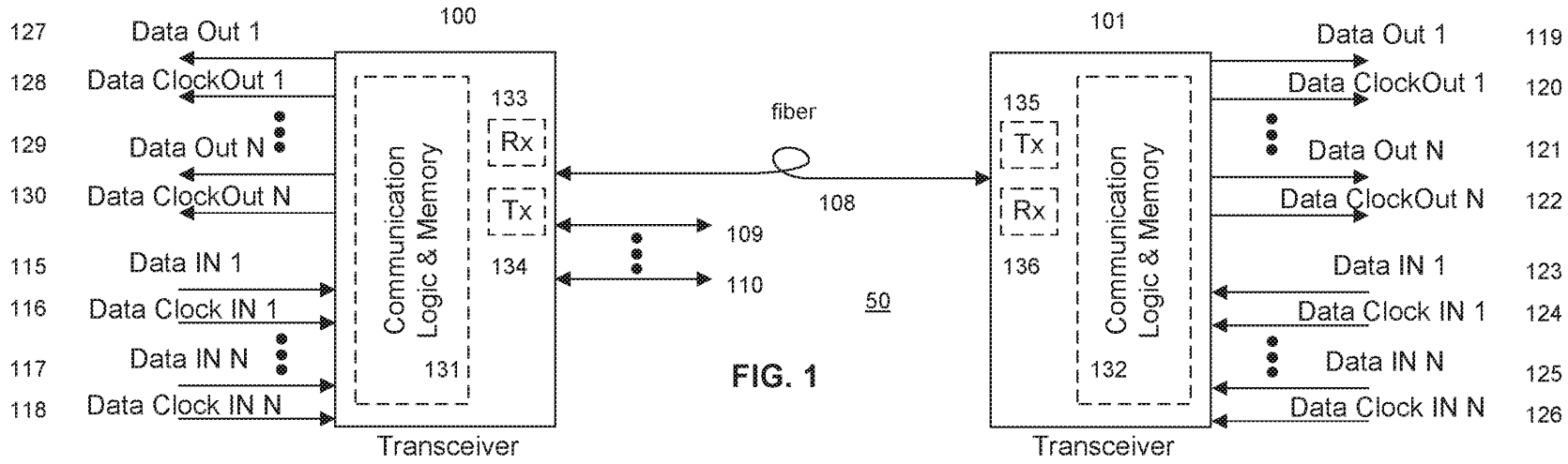
127
Data Out 1
128
Data ClockOut 1
129
Data Out N
130
Data ClockOut N
115
Data IN 1
116
Data Clock IN 1
117
Data IN N
118
Data Clock IN N
100
Communication Logic & Memory
131
133
Rx
Tx
134
Transceiver
fiber
108
109
110
50
101
135
Tx
Rx
136
Communication Logic & Memory
132
Transceiver
Data Out 1
119
Data ClockOut 1
120
Data Out N
121
Data ClockOut N
122
Data IN 1
123
Data Clock IN 1
124
Data IN N
125
Data Clock IN N
126

FIG. 1

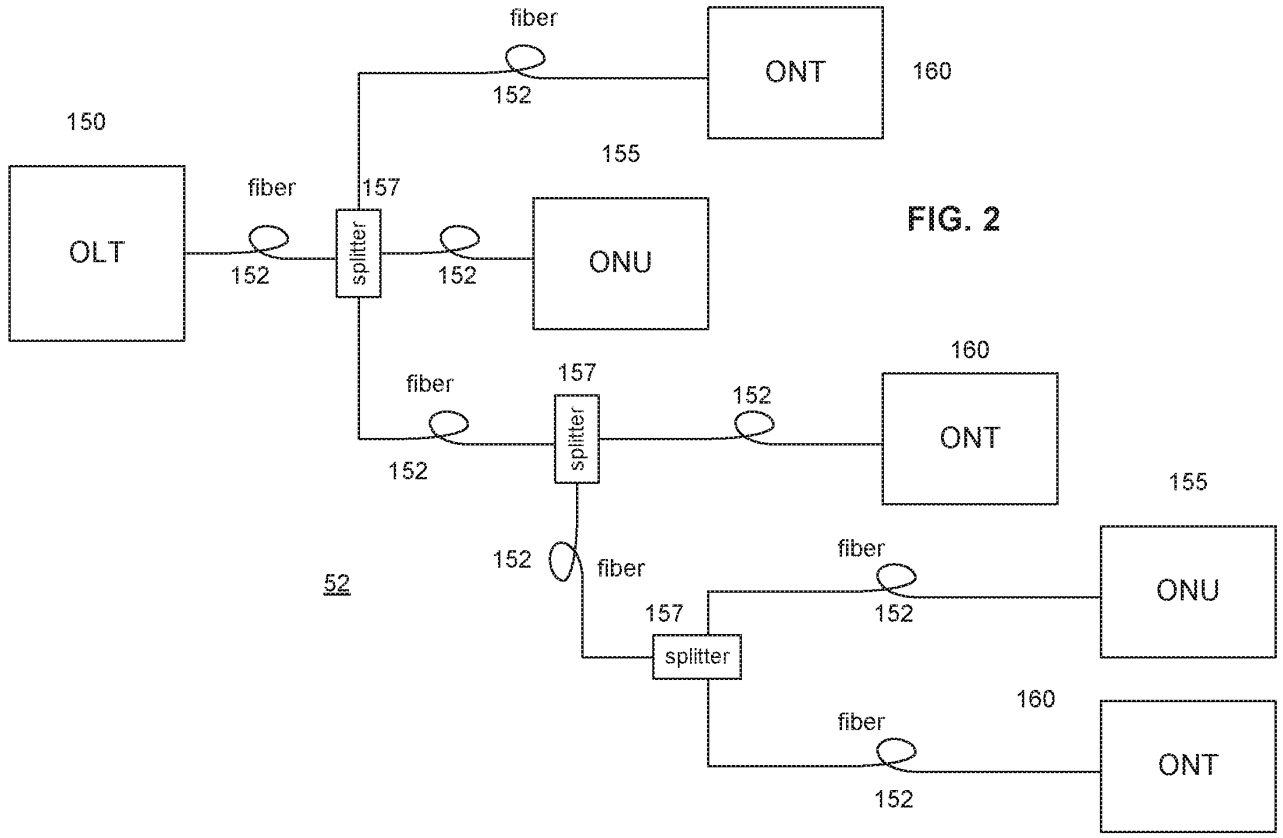
150
OLT
fiber
152
157
splitter
fiber
152
ONT
160
155
ONU
fiber
152
157
splitter
152
ONT
160
152
fiber
157
splitter
fiber
152
ONU
155
fiber
152
ONT
160
52

FIG. 2

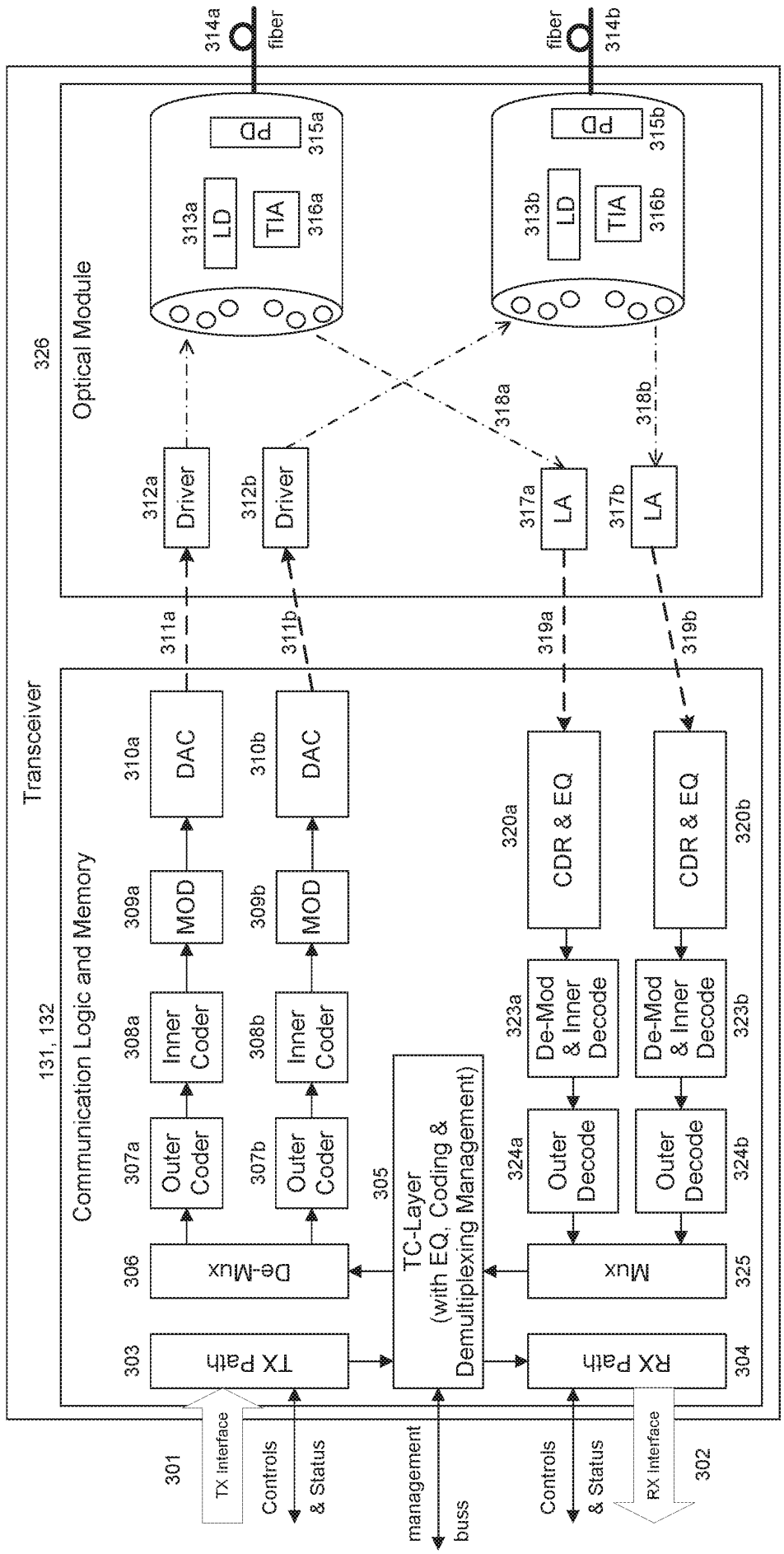
Transceiver
326
Optical Module
131, 132
Communication Logic and Memory
314a
fiber
fiber
314b
315a
PD
313a
LD
TIA
316a
315b
PD
313b
LD
TIA
316b
318a
318b
312a
Driver
312b
Driver
317a
LA
317b
LA
311a
311b
319a
319b
310a
DAC
310b
DAC
309a
MOD
309b
MOD
308a
Inner Coder
308b
Inner Coder
307a
Outer Coder
307b
Outer Coder
320a
CDR & EQ
320b
CDR & EQ
323a
De-Mod & Inner Decode
323b
De-Mod & Inner Decode
324a
Outer Decode
324b
Outer Decode
305
TC-Layer (with EQ, Coding & Demultiplexing Management)
306
De-Mux
Mux
325
303
TX Path
RX Path
304
301
TX Interface
Controls & Status
management buss
Controls & Status
RX Interface
302

FIG. 3

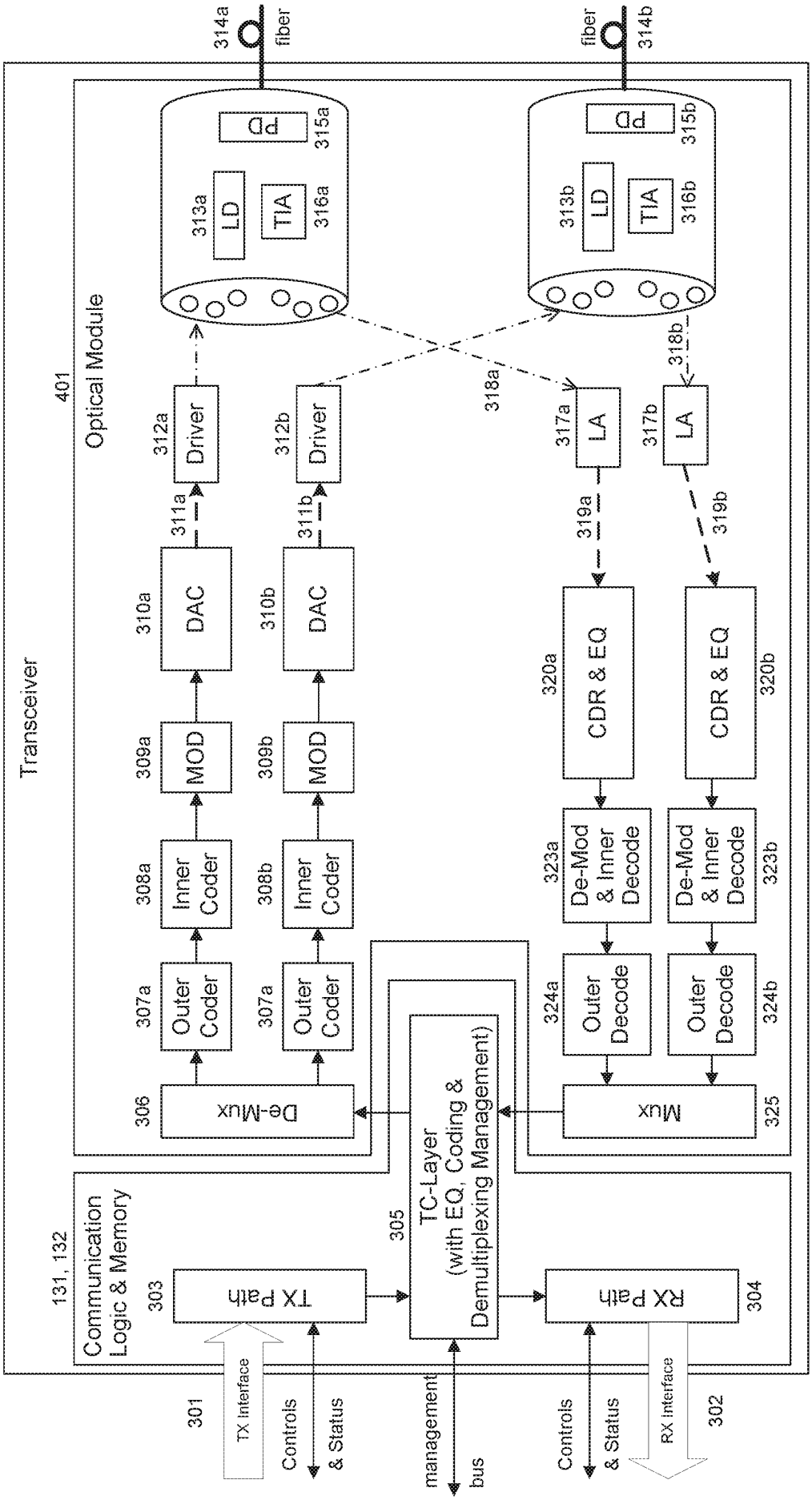
Transceiver
401
Optical Module
314a
fiber
fiber
314b
PD
315a
LD
313a
TIA
316a
PD
315b
LD
313b
TIA
316b
312a
Driver
312b
Driver
318a
318b
317a
LA
317b
LA
311a
311b
310a
DAC
310b
DAC
319a
319b
309a
MOD
309b
MOD
320a
CDR & EQ
320b
CDR & EQ
308a
Inner Coder
308b
Inner Coder
323a
De-Mod & Inner Decode
323b
De-Mod & Inner Decode
307a
Outer Coder
307a
Outer Coder
324a
Outer Decode
324b
Outer Decode
306
De-Mux
Mux
325
131, 132
Communication Logic & Memory
303
TX Path
305
TC-Layer (with EQ, Coding & Demultiplexing Management)
RX Path
304
301
TX Interface
Controls & Status
management bus
Controls & Status
RX Interface
302

FIG. 4

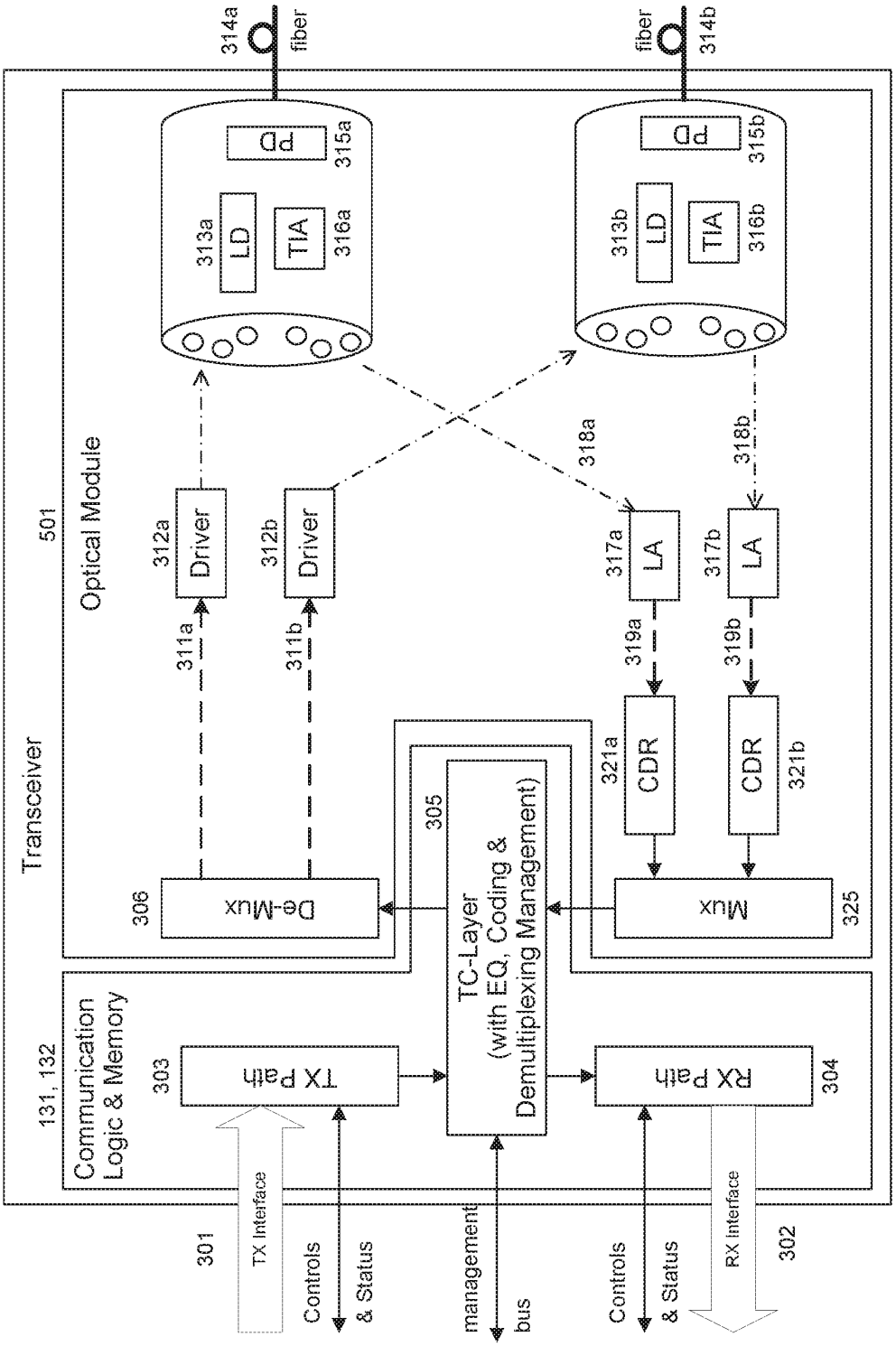
Transceiver
501
Optical Module
131, 132
Communication Logic & Memory
314a
fiber
fiber
314b
PD
315a
PD
315b
313a
LD
TIA
316a
313b
LD
TIA
316b
312a
Driver
312b
Driver
318a
318b
317a
LA
317b
LA
311a
311b
319a
319b
321a
CDR
CDR
321b
305
306
De-Mux
TC-Layer
(with EQ, Coding &
Demultiplexing Management)
Mux
325
303
TX Path
RX Path
304
301
TX Interface
Controls
& Status
management
bus
Controls
& Status
RX Interface
302

FIG. 5

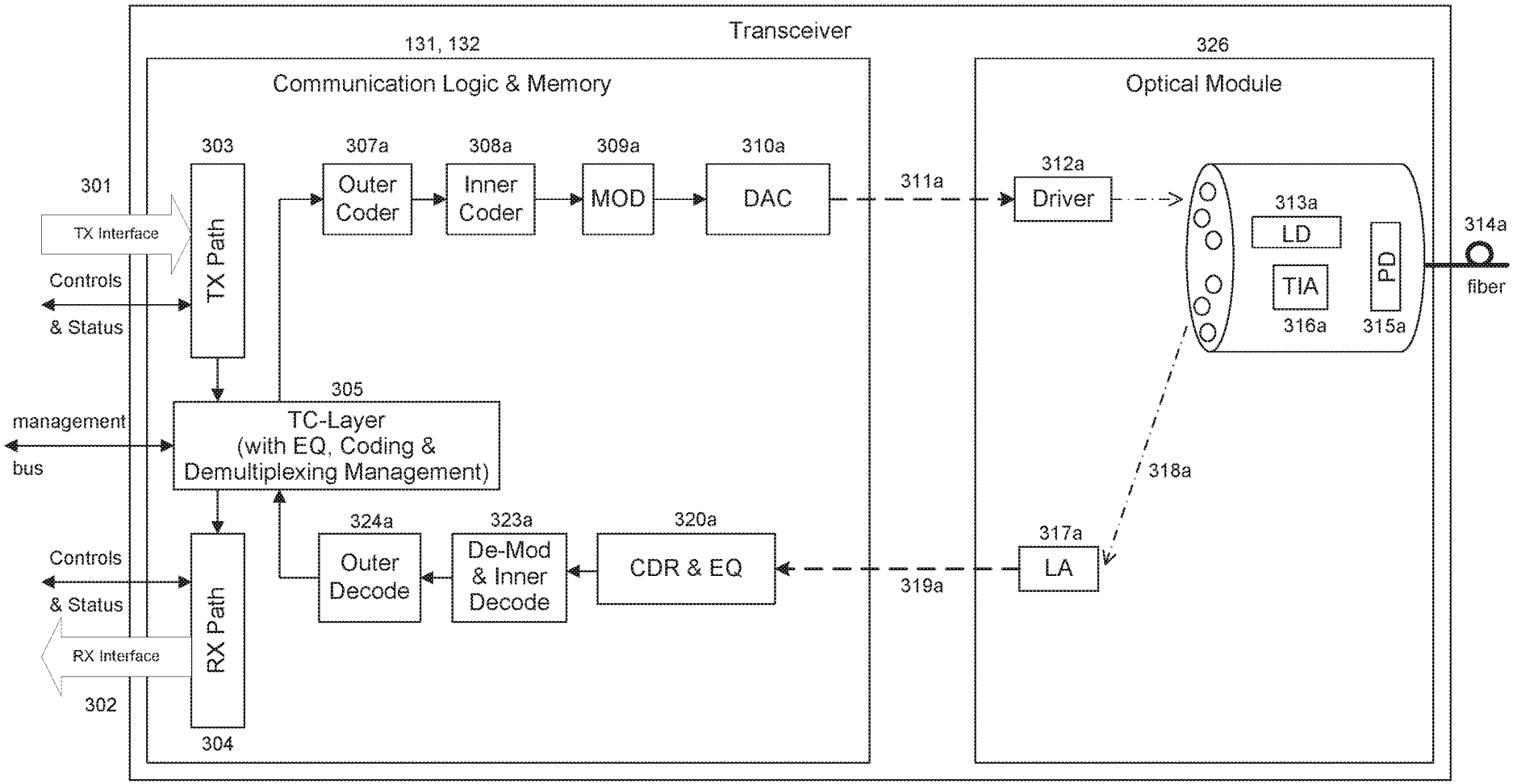
Transceiver
131, 132
Communication Logic & Memory
326
Optical Module
301
TX Interface
Controls
& Status
303
TX Path
307a
Outer Coder
308a
Inner Coder
309a
MOD
310a
DAC
311a
312a
Driver
313a
LD
TIA
316a
PD
315a
314a
fiber
management
bus
305
TC-Layer
(with EQ, Coding &
Demultiplexing Management)
318a
Controls
& Status
RX Interface
302
RX Path
304
324a
Outer Decode
323a
De-Mod
& Inner
Decode
320a
CDR & EQ
319a
317a
LA

FIG. 6A

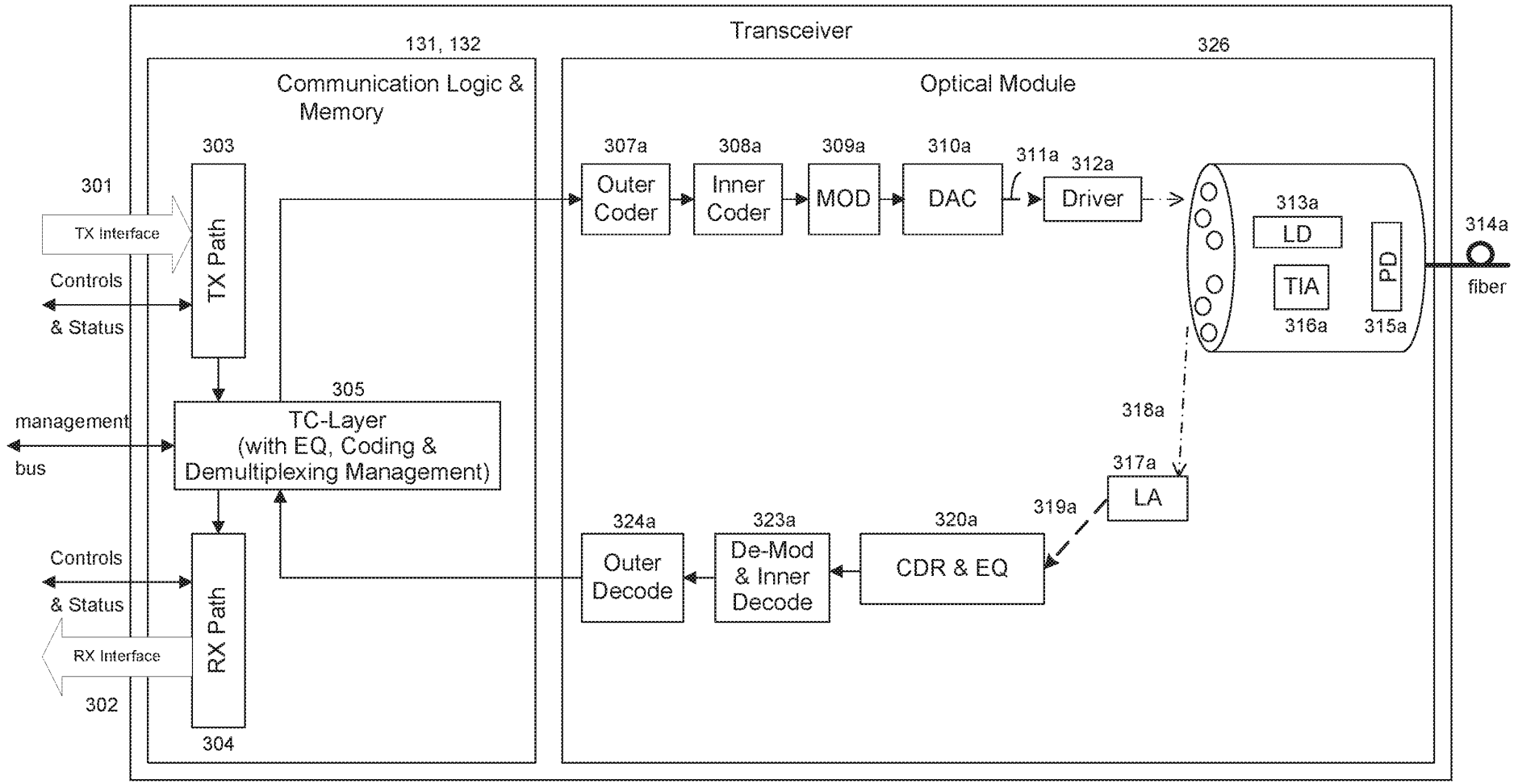
Transceiver
131, 132
Communication Logic & Memory
326
Optical Module
301
TX Interface
Controls
& Status
303
TX Path
307a
Outer Coder
308a
Inner Coder
309a
MOD
310a
DAC
311a
312a
Driver
313a
LD
TIA
316a
PD
315a
314a
fiber
305
TC-Layer (with EQ, Coding & Demultiplexing Management)
management
bus
318a
317a
LA
319a
320a
CDR & EQ
323a
De-Mod & Inner Decode
324a
Outer Decode
Controls
& Status
RX Interface
302
RX Path
304

FIG. 6B

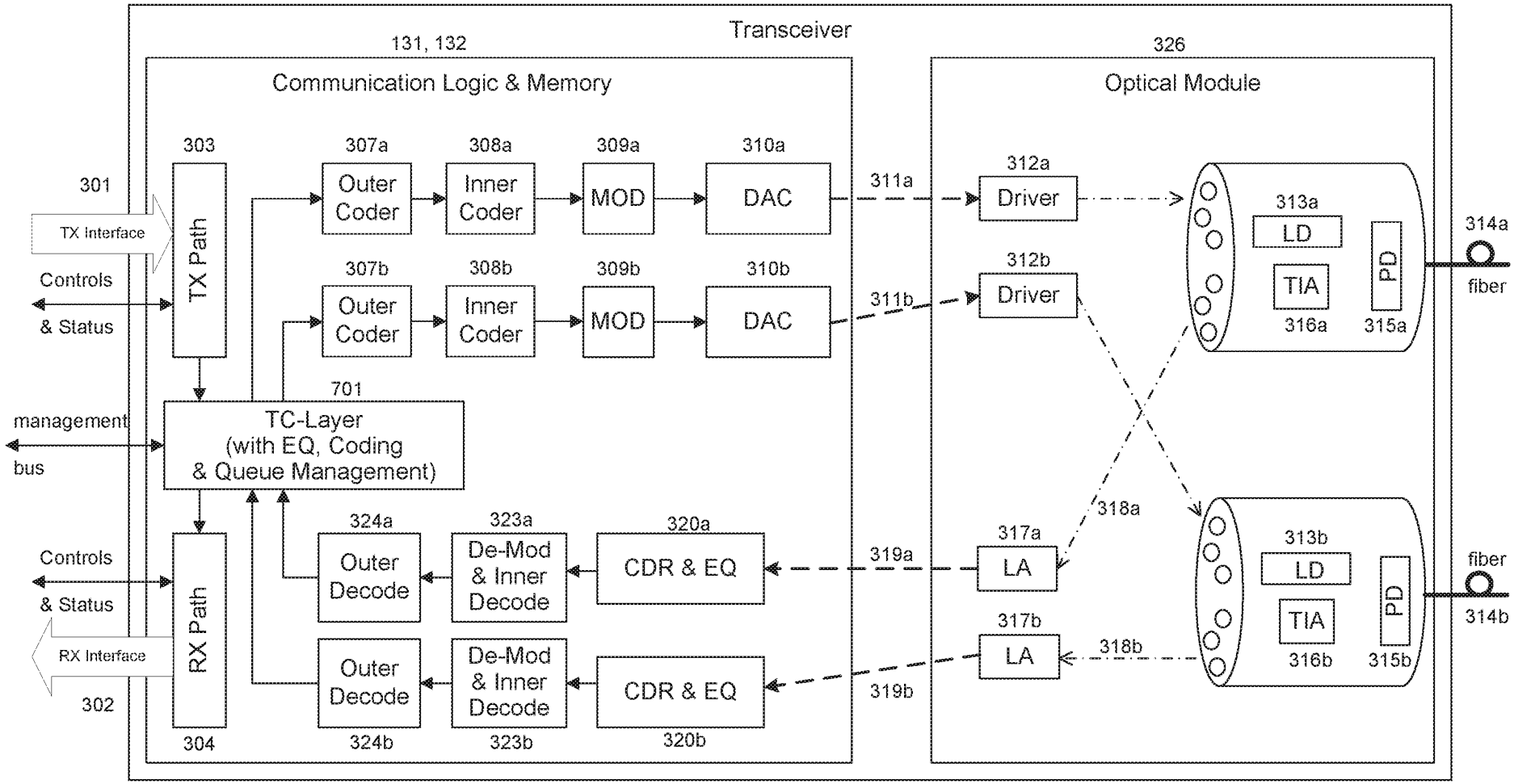
Transceiver
131, 132
Communication Logic & Memory
326
Optical Module
301
TX Interface
Controls
& Status
303
TX Path
307a
Outer Coder
308a
Inner Coder
309a
MOD
310a
DAC
307b
Outer Coder
308b
Inner Coder
309b
MOD
310b
DAC
311a
311b
312a
Driver
312b
Driver
313a
LD
TIA
316a
PD
315a
314a
fiber
701
management
bus
TC-Layer
(with EQ, Coding
& Queue Management)
318a
Controls
& Status
RX Interface
302
RX Path
304
324a
Outer Decode
323a
De-Mod
& Inner Decode
320a
CDR & EQ
319a
317a
LA
313b
LD
TIA
316b
PD
315b
fiber
314b
Outer Decode
324b
De-Mod
& Inner Decode
323b
CDR & EQ
320b
319b
317b
LA
318b

FIG. 7

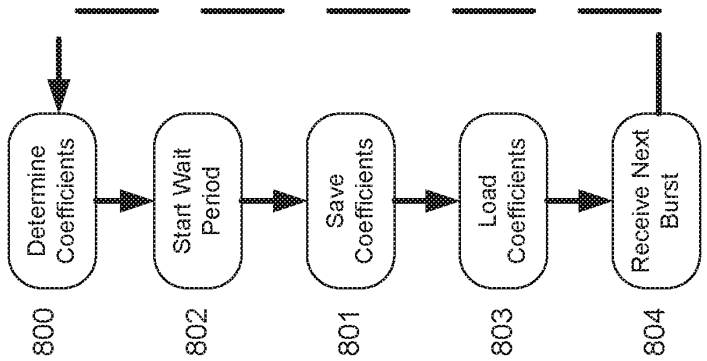
800
Determine Coefficients
802
Start Wait Period
801
Save Coefficients
803
Load Coefficients
804
Receive Next Burst

FIG. 8B

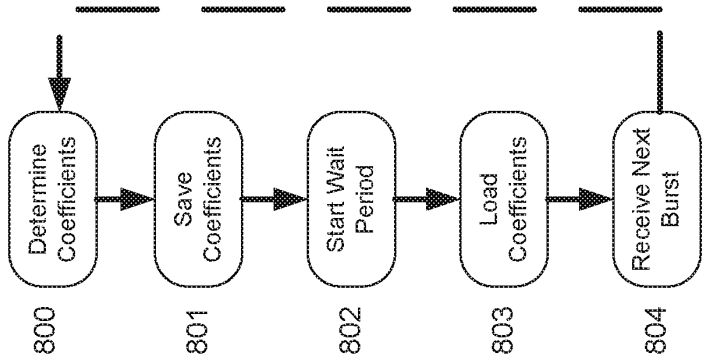
800
Determine Coefficients
801
Save Coefficients
802
Start Wait Period
803
Load Coefficients
804
Receive Next Burst

FIG. 8A

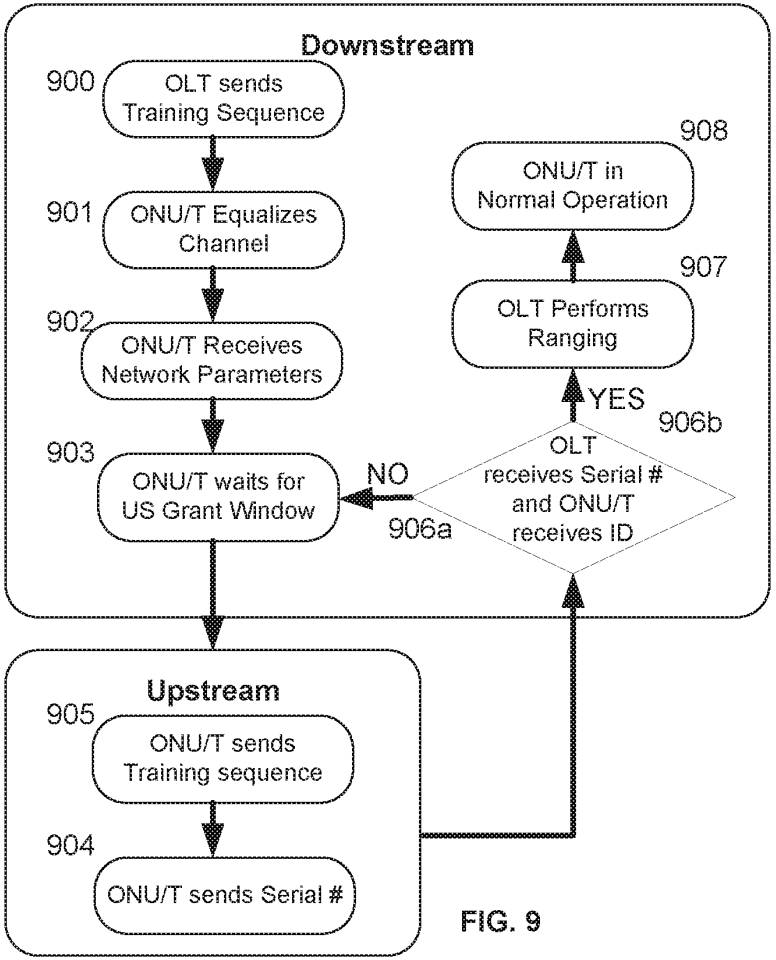
Downstream
900
OLT sends Training Sequence
901
ONU/T Equalizes Channel
902
ONU/T Receives Network Parameters
903
ONU/T waits for US Grant Window
NO
906a
OLT receives Serial # and ONU/T receives ID
YES
906b
907
OLT Performs Ranging
908
ONU/T in Normal Operation
Upstream
905
ONU/T sends Training sequence
904
ONU/T sends Serial #

FIG. 9

PTO/AIA/01 (06-12)
Approved for use through 01/31/2014. OMB 0651-0032
U.S. Patent and Trademark Office; U.S. DEPARTMENT OF COMMERCE
Under the Paperwork Reduction Act of 1995, no persons are required to respond to a collection of information unless it displays a valid OMB control number.

DECLARATION (37 CFR 1.63) FOR UTILITY OR DESIGN APPLICATION USING AN APPLICATION DATA SHEET (37 CFR 1.76)

Title of Invention	SYSTEM AND METHOD FOR PERFORMING HIGH-SPEED COMMUNICATIONS OVER FIBER OPTICAL NETWORKS

As the below named inventor, I hereby declare that:

This declaration is directed to:

- [x] The attached application, or
- [ ] United States application or PCT international application number _____

filed on _____.

The above-identified application was made or authorized to be made by me.

I believe that I am the original inventor or an original joint inventor of a claimed invention in the application.

I hereby acknowledge that any willful false statement made in this declaration is punishable under 18 U.S.C. 1001 by fine or imprisonment of not more than five (5) years, or both.

WARNING:

Petitioner/applicant is cautioned to avoid submitting personal information in documents filed in a patent application that may contribute to identity theft. Personal information such as social security numbers, bank account numbers, or credit card numbers (other than a check or credit card authorization form PTO-2038 submitted for payment purposes) is never required by the USPTO to support a petition or an application. If this type of personal information is included in documents submitted to the USPTO, petitioners/applicants should consider redacting such personal information from the documents before submitting them to the USPTO. Petitioner/applicant is advised that the record of a patent application is available to the public after publication of the application (unless a non-publication request in compliance with 37 CFR 1.213(a) is made in the application) or issuance of a patent. Furthermore, the record from an abandoned application may also be available to the public if the application is referenced in a published application or an issued patent (see 37 CFR 1.14). Checks and credit card authorization forms PTO-2038 submitted for payment purposes are not retained in the application file and therefore are not publicly available.

LEGAL NAME OF INVENTOR

Inventor: Alexander I. Soto _____ Date (Optional) :_____

Signature: /Alexander Soto/ _____

Note: An application data sheet (PTO/SB/14 or equivalent), including naming the entire inventive entity, must accompany this form or must have been previously filed. Use an additional PTO/AIA/01 form for each additional inventor.

This collection of information is required by 35 U.S.C. 115 and 37 CFR 1.63. The information is required to obtain or retain a benefit by the public which is to file (and by the USPTO to process) an application. Confidentiality is governed by 35 U.S.C. 122 and 37 CFR 1.11 and 1.14. This collection is estimated to take 1 minute to complete, including gathering, preparing, and submitting the completed application form to the USPTO. Time will vary depending upon the individual case. Any comments on the amount of time you require to complete this form and/or suggestions for reducing this burden, should be sent to the Chief Information Officer, U.S. Patent and Trademark Office, U.S. Department of Commerce, P.O. Box 1450, Alexandria, VA 22313-1450. DO NOT SEND FEES OR COMPLETED FORMS TO THIS ADDRESS. **SEND TO: Commissioner for Patents, P.O. Box 1450, Alexandria, VA 22313-1450.**

If you need assistance in completing the form, call 1-800-PTO-9199 and select option 2.

Privacy Act Statement

The **Privacy Act of 1974 (P.L. 93-579)** requires that you be given certain information in connection with your submission of the attached form related to a patent application or patent. Accordingly, pursuant to the requirements of the Act, please be advised that: (1) the general authority for the collection of this information is 35 U.S.C. 2(b)(2); (2) furnishing of the information solicited is voluntary; and (3) the principal purpose for which the information is used by the U.S. Patent and Trademark Office is to process and/or examine your submission related to a patent application or patent. If you do not furnish the requested information, the U.S. Patent and Trademark Office may not be able to process and/or examine your submission, which may result in termination of proceedings or abandonment of the application or expiration of the patent.

The information provided by you in this form will be subject to the following routine uses:

1. The information on this form will be treated confidentially to the extent allowed under the Freedom of Information Act (5 U.S.C. 552) and the Privacy Act (5 U.S.C 552a). Records from this system of records may be disclosed to the Department of Justice to determine whether disclosure of these records is required by the Freedom of Information Act.
2. A record from this system of records may be disclosed, as a routine use, in the course of presenting evidence to a court, magistrate, or administrative tribunal, including disclosures to opposing counsel in the course of settlement negotiations.
3. A record in this system of records may be disclosed, as a routine use, to a Member of Congress submitting a request involving an individual, to whom the record pertains, when the individual has requested assistance from the Member with respect to the subject matter of the record.
4. A record in this system of records may be disclosed, as a routine use, to a contractor of the Agency having need for the information in order to perform a contract. Recipients of information shall be required to comply with the requirements of the Privacy Act of 1974, as amended, pursuant to 5 U.S.C. 552a(m).
5. A record related to an International Application filed under the Patent Cooperation Treaty in this system of records may be disclosed, as a routine use, to the International Bureau of the World Intellectual Property Organization, pursuant to the Patent Cooperation Treaty.
6. A record in this system of records may be disclosed, as a routine use, to another federal agency for purposes of National Security review (35 U.S.C. 181) and for review pursuant to the Atomic Energy Act (42 U.S.C. 218(c)).
7. A record from this system of records may be disclosed, as a routine use, to the Administrator, General Services, or his/her designee, during an inspection of records conducted by GSA as part of that agency's responsibility to recommend improvements in records management practices and programs, under authority of 44 U.S.C. 2904 and 2906. Such disclosure shall be made in accordance with the GSA regulations governing inspection of records for this purpose, and any other relevant (*i.e.*, GSA or Commerce) directive. Such disclosure shall not be used to make determinations about individuals.
8. A record from this system of records may be disclosed, as a routine use, to the public after either publication of the application pursuant to 35 U.S.C. 122(b) or issuance of a patent pursuant to 35 U.S.C. 151. Further, a record may be disclosed, subject to the limitations of 37 CFR 1.14, as a routine use, to the public if the record was filed in an application which became abandoned or in which the proceedings were terminated and which application is referenced by either a published application, an application open to public inspection or an issued patent.
9. A record from this system of records may be disclosed, as a routine use, to a Federal, State, or local law enforcement agency, if the USPTO becomes aware of a violation or potential violation of law or regulation.

PTO/AIA/01 (06-12)
Approved for use through 01/31/2014. OMB 0651-0032
U.S. Patent and Trademark Office; U.S. DEPARTMENT OF COMMERCE
Under the Paperwork Reduction Act of 1995, no persons are required to respond to a collection of information unless it displays a valid OMB control number.

DECLARATION (37 CFR 1.63) FOR UTILITY OR DESIGN APPLICATION USING AN APPLICATION DATA SHEET (37 CFR 1.76)

Title of Invention	SYSTEM AND METHOD FOR PERFORMING HIGH-SPEED COMMUNICATIONS OVER FIBER OPTICAL NETWORKS

As the below named inventor, I hereby declare that:

This declaration is directed to:

- [x] The attached application, or
- [ ] United States application or PCT international application number _____

filed on _____.

The above-identified application was made or authorized to be made by me.

I believe that I am the original inventor or an original joint inventor of a claimed invention in the application.

I hereby acknowledge that any willful false statement made in this declaration is punishable under 18 U.S.C. 1001 by fine or imprisonment of not more than five (5) years, or both.

WARNING:

Petitioner/applicant is cautioned to avoid submitting personal information in documents filed in a patent application that may contribute to identity theft. Personal information such as social security numbers, bank account numbers, or credit card numbers (other than a check or credit card authorization form PTO-2038 submitted for payment purposes) is never required by the USPTO to support a petition or an application. If this type of personal information is included in documents submitted to the USPTO, petitioners/applicants should consider redacting such personal information from the documents before submitting them to the USPTO. Petitioner/applicant is advised that the record of a patent application is available to the public after publication of the application (unless a non-publication request in compliance with 37 CFR 1.213(a) is made in the application) or issuance of a patent. Furthermore, the record from an abandoned application may also be available to the public if the application is referenced in a published application or an issued patent (see 37 CFR 1.14). Checks and credit card authorization forms PTO-2038 submitted for payment purposes are not retained in the application file and therefore are not publicly available.

LEGAL NAME OF INVENTOR

Inventor: Walter G. Soto Date (Optional) :_____

Signature: /Walter Soto/

Note: An application data sheet (PTO/SB/14 or equivalent), including naming the entire inventive entity, must accompany this form or must have been previously filed. Use an additional PTO/AIA/01 form for each additional inventor.

This collection of information is required by 35 U.S.C. 115 and 37 CFR 1.63. The information is required to obtain or retain a benefit by the public which is to file (and by the USPTO to process) an application. Confidentiality is governed by 35 U.S.C. 122 and 37 CFR 1.11 and 1.14. This collection is estimated to take 1 minute to complete, including gathering, preparing, and submitting the completed application form to the USPTO. Time will vary depending upon the individual case. Any comments on the amount of time you require to complete this form and/or suggestions for reducing this burden, should be sent to the Chief Information Officer, U.S. Patent and Trademark Office, U.S. Department of Commerce, P.O. Box 1450, Alexandria, VA 22313-1450. DO NOT SEND FEES OR COMPLETED FORMS TO THIS ADDRESS. **SEND TO: Commissioner for Patents, P.O. Box 1450, Alexandria, VA 22313-1450.**

If you need assistance in completing the form, call 1-800-PTO-9199 and select option 2.

Privacy Act Statement

The **Privacy Act of 1974 (P.L. 93-579)** requires that you be given certain information in connection with your submission of the attached form related to a patent application or patent. Accordingly, pursuant to the requirements of the Act, please be advised that: (1) the general authority for the collection of this information is 35 U.S.C. 2(b)(2); (2) furnishing of the information solicited is voluntary; and (3) the principal purpose for which the information is used by the U.S. Patent and Trademark Office is to process and/or examine your submission related to a patent application or patent. If you do not furnish the requested information, the U.S. Patent and Trademark Office may not be able to process and/or examine your submission, which may result in termination of proceedings or abandonment of the application or expiration of the patent.

The information provided by you in this form will be subject to the following routine uses:

1. The information on this form will be treated confidentially to the extent allowed under the Freedom of Information Act (5 U.S.C. 552) and the Privacy Act (5 U.S.C 552a). Records from this system of records may be disclosed to the Department of Justice to determine whether disclosure of these records is required by the Freedom of Information Act.
2. A record from this system of records may be disclosed, as a routine use, in the course of presenting evidence to a court, magistrate, or administrative tribunal, including disclosures to opposing counsel in the course of settlement negotiations.
3. A record in this system of records may be disclosed, as a routine use, to a Member of Congress submitting a request involving an individual, to whom the record pertains, when the individual has requested assistance from the Member with respect to the subject matter of the record.
4. A record in this system of records may be disclosed, as a routine use, to a contractor of the Agency having need for the information in order to perform a contract. Recipients of information shall be required to comply with the requirements of the Privacy Act of 1974, as amended, pursuant to 5 U.S.C. 552a(m).
5. A record related to an International Application filed under the Patent Cooperation Treaty in this system of records may be disclosed, as a routine use, to the International Bureau of the World Intellectual Property Organization, pursuant to the Patent Cooperation Treaty.
6. A record in this system of records may be disclosed, as a routine use, to another federal agency for purposes of National Security review (35 U.S.C. 181) and for review pursuant to the Atomic Energy Act (42 U.S.C. 218(c)).
7. A record from this system of records may be disclosed, as a routine use, to the Administrator, General Services, or his/her designee, during an inspection of records conducted by GSA as part of that agency's responsibility to recommend improvements in records management practices and programs, under authority of 44 U.S.C. 2904 and 2906. Such disclosure shall be made in accordance with the GSA regulations governing inspection of records for this purpose, and any other relevant (*i.e.*, GSA or Commerce) directive. Such disclosure shall not be used to make determinations about individuals.
8. A record from this system of records may be disclosed, as a routine use, to the public after either publication of the application pursuant to 35 U.S.C. 122(b) or issuance of a patent pursuant to 35 U.S.C. 151. Further, a record may be disclosed, subject to the limitations of 37 CFR 1.14, as a routine use, to the public if the record was filed in an application which became abandoned or in which the proceedings were terminated and which application is referenced by either a published application, an application open to public inspection or an issued patent.
9. A record from this system of records may be disclosed, as a routine use, to a Federal, State, or local law enforcement agency, if the USPTO becomes aware of a violation or potential violation of law or regulation.

SYSTEM AND METHOD FOR PERFORMING HIGH-SPEED COMMUNICATIONS OVER FIBER OPTICAL NETWORKS

CROSS-REFERENCE TO RELATED APPLICATIONS

[001] This application is filed as a 37 C.F.R. 1.53(b) as a continuation claiming the benefit under 35 U.S.C §120 of the pending U.S. patent application No. 12/512,968, "System and Method for Performing High-Speed Communications over Fiber Optical Networks", which was filed by the same inventors on July 30, 2009 claiming the benefit under 37 C.F.R. 1.53(b)(2) of U.S. Patent Application Ser. No. 11/772,187 filed on June 30, 2007, which claims benefit of commonly-assigned U.S. Patent Application Ser. No. 10/865,547 filed on June 10, 2004, now U.S. Pat. No. 7,242,868, which claims the benefit of U.S. Provisional Application No. 60/477,845 filed June 10, 2003, incorporated herein by reference, and U.S. Provisional Application No. 60/480,488 filed June 21, 2003, incorporated herein by reference.

FIELD OF THE INVENTION

[002] The invention relates to optical fiber communications generally, and more specifically to m-ary modulation in optical communication networks.

BACKGROUND OF THE INVENTION

[003] Line coding is a process by which a communication protocol arranges symbols that represent binary data in a particular pattern for transmission. Conventional line coding used in fiber optic communications includes non-return-to-zero (NRZ), return-to-zero (RZ), and biphase, or Manchester. The binary bit stream derived from these line codes can be directly modulated onto wavelengths of light generated by the resonating frequency of a laser. Traditionally direct binary modulation based transmission offers an advantage with regard to the acceptable signal-to-noise ratio (SNR) at the optical receiver, which is one of the reasons direct binary modulation methods are used in the Datacom Ethernet/IP, Storage Fiber-Channel/FC and Telecom SONET/SDH markets for transmission across nonmultiplexed unidirectional fiber links.

[004] The performance of a fiber optic network can be measured by the maximum data throughput rate (or information carrying capacity) and the maximum distance between source and destination achievable (or reach). For Passive Optical Networks (PONs) in particular, additional measures of performance are the maximum number of Optical Networking Units (ONUs) and/or Optical Networking Terminals (ONTs) possible on a network and the minimum and maximum distance between the Optical Line Terminator (OLT) and an ONU/ONT. These performance metrics are constrained by, among other things, amplitude degradation and temporal distortions as a result of light traveling through an optical fiber.

[005] Amplitude degradation is substantially a function of length or distance between two end points of an optical fiber. Temporal distortion mechanisms include intramodal (chromatic) dispersion and intermodal (modal) dispersion. Intramodal dispersion is the dominant temporal dispersion on Single-mode fiber (SMF), while intermodal dispersion is dominant on Multi-mode fiber (MMF). Both types of temporal distortions are measured as functions of frequency or rate of transmission (also referred as line rate of a communication protocol) over distance in MHz•km. Temporal distortions are greater, hence a constraint on network performance, with increasing frequency transmission.

SUMMARY OF THE INVENTION

[006] In general, in one aspect, the invention includes a method for processing a received optical signal in an optical communication network, the method including: determining a first set of coefficients to equalize a portion of an optical signal received over a first optical link including using a blind equalization method that does not use a known training sequence to equalize the portion of the optical signal, equalizing the portion of the optical signal using the determined coefficients, and demodulating the equalized portion of the optical signal according to an m-ary modulation format.

[007] Aspects of the invention may include one or more of the following features. The method includes determining a second set of coefficients to equalize a portion of an optical signal received over a second optical link. The method includes selecting one

of the first or second set of coefficients based on a source of the portion of optical signal being equalized. The portion of the optical signal includes a burst within a time slot of the first optical link. The method includes storing the determined coefficients. The method includes retrieving the stored coefficients for equalizing a second portion of the optical signal corresponding to a portion received from a same source as generated the first portion of the optical signal. The coefficients are retrieved between signal bursts on the first optical link. The stored coefficients are retrieved for respective portions of the optical signals that correspond to respective signal sources. The first optical link includes a link in a point-to-multipoint passive optical network. The m-ary modulation format is selected from the group consisting of quadrature amplitude modulation, quadrature phase shift keying, orthogonal frequency division multiplexing and pulse amplitude modulation. The method includes demodulating a received first data stream and demodulating a second data stream received in the optical signal, and multiplexing the first and second data streams.

[008] In general, in another aspect, the invention includes optical communication system including: a first transceiver coupled by an optical network to a second transceiver and third transceiver, the first transceiver including an equalization block and a modulation block, the equalization block operable to determine a first set of coefficients to equalize a portion of an optical signal received over the optical network from the second transceiver and a second set of coefficients to equalize a portion of the optical signal received over the optical network from the third transceiver, the equalization block including a blind equalization routine that does not use a known training sequence to equalize the portions of the optical signal, the equalization block operable to equalize the portions of the optical signal using the determined coefficients, and the modulation block operable to demodulate equalized portions of the optical signal according to an m-ary modulation format.

[009] Aspects of the invention may include one or more of the following features. The optical network includes a first optical link for coupling the first and second transceiver, and a second optical link for coupling the first and third transceivers and where the equalization block is operable to select one of the first or second set of

coefficients based on a source of the portion of optical signal being equalized. The equalization block is operable to store the first and second sets of coefficients for later retrieval and use to equalize portions of the optical signal. The portion of the optical signal includes a burst within a time slot on the optical network. The equalization block is operable to retrieve the sets of coefficients between signal bursts on the optical network. The optical network includes a link in a point-to-multipoint passive optical network. The m-ary modulation format is selected from the group consisting of quadrature amplitude modulation, quadrature phase shift keying, orthogonal frequency division multiplexing and pulse amplitude modulation. The system includes a multiplexer, the modulation block operable to demodulating a received first data stream and a second data stream received in the optical signal, and the multiplexer operable to multiplex the first and second data streams. The system includes a transmission convergence layer block for processing data streams received by the first transceiver, the transmission convergence layer block operable to control the demultiplexing of data streams including control of the multiplexer. The optical network is an optical distribution network. The first transceiver is an optical line terminator. The second and third transceivers are optical network terminals or optical network units.

[0010] In general, in another aspect, the invention includes a method for processing data for transmission in an optical communication network, the method including: demultiplexing a data stream into a first demultiplexed data stream and a second demultiplexed data stream, modulating each of the first and second data streams according to an m-ary modulation format, transmitting the first modulated data stream over a first optical link; and transmitting the second modulated data stream over a second optical link.

[0011] In general, in another aspect, the invention includes an optical communication system including: a demultiplexer operable to demultiplex a data stream into a first demultiplexed data stream and a second demultiplexed data stream, a modulation block operable to modulate each of the first and second data streams according to an m-ary modulation format, transmitting means operable to transmit the first modulated

data stream over a first optical link and the second modulated data stream over a second optical link.

[0012] In general, in another aspect, the invention includes a method for processing a received optical signal in an optical communication network, the method including: equalizing a received optical signal to provide an equalized signal, demodulating the equalized signal according to an m-ary modulation format to provide a demodulated signal, decoding the demodulated signal according to an inner code to provide an inner-decoded signal, and decoding the inner-decoded signal according to an outer code.

[0013] Aspects of the invention may include one or more of the following features. The m-ary modulation format is selected from the group consisting of quadrature amplitude modulation, quadrature phase shift keying, orthogonal frequency division multiplexing and pulse amplitude modulation. Equalizing the received optical signal includes equalizing the received optical signal using a blind equalization routine that does not use a known training sequence. Equalizing the received optical signal includes equalizing the received optical signal using a known training sequence. The known training sequence is multiplexed in a frame within the received optical signal. The inner code includes a trellis code. The outer code includes an error correction code. The outer code includes a: Reed-Solomon code; trellis code; Low-density parity-check code, or a Turbo code.

[0014] In general, in another aspect, the invention includes a transceiver including: an equalizer for equalizing a received optical signal to provide an equalized signal, a demodulator in communication with the equalizer for demodulating the equalized signal according to an m-ary modulation format to provide a demodulated signal, an inner-decoder in communication with the demodulator for decoding the demodulated signal according to an inner code to provide an inner-decoded signal, and an outer-decoder in communication with the inner-decoder for decoding the inner-decoded signal according to an outer code.

[0015] Aspects of the invention may include one or more of the following features. The transceiver includes an optical module including a first bi-directional optical fiber interface including a first detector and a first driver, and a second bi-directional

optical fiber interface including a second detector and a second driver, and management means for managing data flow across the first bi-directional optical fiber interface and across the second bi-directional optical fiber interface. The transceiver includes an optical module including a first bi-directional optical fiber interface including a first detector and a first driver, and a second bi-directional optical fiber interface including a second detector and a second driver, and a multiplexer for multiplexing a first demultiplexed data stream received over the first bi-directional optical fiber interface and a second demultiplexed data stream received over the second bi-directional optical fiber interface into a multiplexed data stream for transmission. The transceiver includes an optical module including a first bi-directional optical fiber interface including a first detector and a first driver, and a second bi-directional optical fiber interface including a second detector and a second driver, and a queue manager for managing traffic for a first bi-directional link associated with the first bi-directional optical fiber interface independently from traffic for a second bi-directional link associated with the second bi-directional optical fiber interface.

[0016] In general, in another aspect, the invention includes a transceiver including: an optical module including a first bi-directional optical fiber interface including a first detector and a first driver, and a second bi-directional optical fiber interface including a second detector and a second driver, and management means for managing data flow across the first bi-directional optical fiber interface and across the second bi-directional optical fiber interface.

[0017] Aspects of the invention may include one or more of the following features. The management means includes a multiplexer for multiplexing a first demultiplexed data stream received over the first bi-directional optical fiber interface and a second demultiplexed data stream received over the second bi-directional optical fiber interface into a multiplexed data stream for transmission. The management means is configured to demultiplex a data stream over a plurality of fiber links that excludes one or more failed fiber links. The management means includes a queue manager for managing traffic across the first bi-directional fiber interface independently from traffic for the second bi-directional fiber interface. The management means is

configured to change the alignment of received data bits to adjust for an order of optical fiber connections to the first bi-directional optical fiber interface and the second bi-directional optical fiber interface.

[0018] In general, in another aspect, the invention includes a method for equalizing an optical channel including: storing channel characteristics for the optical channel associated with a client, loading the stored channel characteristics during a waiting period between bursts on the channel, and equalizing a received burst from the client using the loaded channel characteristics.

[0019] Aspects of the invention may include one or more of the following features. The method includes determining that the waiting period occurs before a burst from the client based on a schedule. The method includes updating the stored channel characteristics. The method includes providing a grant window, transmitting an identification number to the client in response to receiving a serial number from the client after the grant window. The method includes determining a distance from an upstream device to the client. The method includes compensating for communication delays between the upstream device and the client based on the determined distance.

[0020] In general, in another aspect, the invention includes a method for communicating data on a fiber optic network, the method including: modulating and demodulating data traffic on an optical link in the network in an m-ary modulation format; encoding and decoding data traffic on an optical link in the network according to an inner coding routine and an outer coding routine, demultiplexing data traffic from an optical link in the network and transmitting the data traffic across a plurality of optical fiber links in the network, multiplexing the data traffic from the plurality of optical fiber links, and equalizing a receive channel in the network to remove temporal distortions.

[0021] Aspects of the invention may include one or more of the following features. The method includes equalizing the receive channel according to a blind equalization routine. The method includes equalizing the receive channel according to a decision directed equalization routine. The method includes saving and loading coefficients for equalizing the receive channel for each of a plurality of transmitting sources. The method includes conveying a training sequence for a decision directed equalization

routine as part of an in-use communication protocol. A training sequence for a decision directed equalization routine is conveyed as part of the activation process for an optical network terminal or optical network unit. An incorrect connection of an optical fiber link is corrected without having to physically change the connection.

[0022] In general, in another aspect, the invention includes a method for communicating on a passive optical network between a central transmission point and a plurality of receiving client end points, the method including: preparing downstream data for transmission and transmitting an optical downstream continuous mode signal demultiplexed across a plurality of bi-directional fibers using a plurality of wavelengths of light, receiving an optical downstream continuous mode signal demultiplexed from the plurality of bi-directional fibers using the plurality of wavelengths of light and recovering a downstream data transmission, preparing upstream data for transmission and transmitting an optical upstream burst mode signal demultiplexed across the plurality of bi-directional fibers using the plurality of wavelengthss of light, and receiving an optical burst mode signal demultiplexed from the plurality of bi-directional fibers using the plurality of wavelengths of light and recovering an upstream data transmission.

[0023] Aspects of the invention may include one or more of the following features. The central transmission point includes an optical line terminal, and the end points are operative as transceivers in a passive optical network. The upstream and downstream data for transmission are conveyed by respective different industry-standard services.

[0024] Implementations of the invention may include one or more of the following advantages.

[0025] A system is proposed that provides for high-speed communications over fiber optic networks. The system may include the use of the one or more of the following techniques either individually or in combination: m-ary modulation; channel equalization; demultiplexing across multiple fibers, coding and error correction. M-ary modulation allows for increased data throughput for a given line rate due to an increase in the number of bits per symbol transmitted. Channel equalization reduces the effects of temporal distortions allowing for increased reach. Demultiplexing across multiple fibers allows lower lines rates for a given data throughput rate due to

the increased aggregate data throughput from the multiplexing. Coding and error correction allows for a greater selection of qualifying optical components that can be used in the network and complements m-ary modulation and channel equalization for overall system performance improvement as measured by transmit energy per bit. These methods when combined (in part or in total) increase the data throughput and reach for fiber optic networks. For PONs in particular, these methods may increase the number of ONU/ONTs and the distance between OLT and ONU/ONT by decreasing the line rate as compared to a conventional communication system of equivalent data throughput.

BRIEF DESCRIPTION OF THE DRAWINGS

[0026] FIG. 1 illustrates a fiber optic data network.

[0027] FIG. 2 illustrates a block diagram of a passive optical network.

[0028] FIG. 3 illustrates a block diagram of a high-speed communication system for fiber optic networks.

[0029] FIG. 4 illustrates a block diagram of an alternative high-speed communication system for fiber optic networks.

[0030] FIG. 5 illustrates a block diagram of an alternative high-speed communication system for fiber optic networks.

[0031] FIG. 6A illustrates a block diagram of an alternative high-speed communication system for fiber optic networks.

[0032] FIG. 6B illustrates a block diagram of an alternative high-speed communication system for fiber optic networks.

[0033] FIG. 7 illustrates a block diagram of an alternative high-speed communication system for fiber optic networks.

[0034] FIG. 8A illustrates an exemplary flow diagram for upstream burst mode communication processing.

[0035] FIG. 8B illustrates another exemplary flow diagram for upstream burst mode communication processing.

[0036] FIG. 9 illustrates an exemplary flow diagram for a downstream continuous mode communication equalization process.

DETAILED DESCRIPTION

[0037] Referring to **FIG. 1**, wherein like reference numerals designate identical or corresponding parts throughout the several views and embodiments, a high-level fiber optic data network **50** includes a first transceiver **100** in communication with a second transceiver **101** via a fiber **108**. The first transceiver **100** and the second transceiver **101** include transmitter circuitry (Tx) **134, 135** to convert electrical data input signals into modulated light signals for transmission over the fiber **108**. In addition, the first transceiver **100** and the second transceiver **101** also include receiver circuitry (Rx) **133, 136** to convert optical signals received via the fiber **108** into electrical signals and to detect and recover encoded data and/or clock signals. First transceiver **100** and second transceiver **101** may contain a micro controller (not shown) and/or other communication logic and memory **131, 132** for network protocol operation. Although the illustrated and described implementations of the transceivers **100**, **101** include communication logic and memory in a same package or device as the transmitter circuitry **134**, **135** and receiver circuitry **133**, **136**, other transceiver configurations may also be used.

[0038] First transceiver **100** transmits/receives data to/from the second transceiver **101** in the form of modulated optical light signals of known wavelength via the optical fiber **108**. The transmission mode of the data sent over the optical fiber **108** may be continuous, burst or both burst and continuous modes. Both transceivers **100**,**101** may transmit a same wavelength (e.g., the light signals are polarized and the polarization of light transmitted from one of the transceivers is perpendicular to the polarization of the light transmitted by the other transceiver). Alternatively, a single wavelength can be used by both transceivers **100, 101** (e.g., the transmissions can be made in accordance with a time-division multiplexing scheme or similar protocol).

[0039] In another implementation, wavelength-division multiplexing (WDM) may also be used. WDM is herein defined as any technique by which two optical signals having different wavelengths may be simultaneously transmitted bi-directionally with one wavelength used in each direction over a single fiber. In yet another implementation, coarse wavelength-division multiplexing (CWDM) or dense

wavelength-division multiplexing (DWDM) may be used. CWDM and DWDM are herein defined as any technique by which two or more optical signals having different wavelengths are simultaneously transmitted in the same direction. The difference between CWDM and DWDM is CWDM wavelengths are typically spaced 20 nanometers (nm) apart, compared with 0.4 nm spacing for DWDM wavelengths. Both CWDM and DWDM may be used in bi-directional communications. In bi-directional communications, e.g. if wavelength-division multiplexing (WDM) is used, the first transceiver **100** may transmit data to the second transceiver **101** utilizing a first wavelength of modulated light conveyed via the fiber **108** and, similarly, the second transceiver **101** may transmit data via the same fiber **108** to the first transceiver **100** utilizing a second wavelength of modulated light conveyed via the same fiber **108**. Because only a single fiber is used, this type of transmission system is commonly referred to as a bi-directional transmission system. Although the fiber optic network illustrated in **FIG. 1** includes a first transceiver **100** in communication with a second transceiver **101** via a single fiber **108**, other implementations of fiber optic networks, such as those having a first transceiver in communication with a plurality of transceivers via a plurality of fibers (e.g. shown in **FIG. 2**), may also be used.

[0040] Electrical data input signals (Data IN 1) **115**, as well as any optional clock signal (Data Clock IN 1) **116**, are routed to the transceiver **100** from an external data source (not shown) for processing by the communication logic and memory **131**. Communication logic and memory **131** process the data and clock signals in accordance with an in-use network protocol. Communication logic and memory **131,132** provides management functions for received and transmitted data including queue management (e.g., independent link control) for each respective link, demultiplexing/multiplexing and other functions as described further below. The processed signals are transmitted by the transmitter circuitry **134**. The resulting modulated light signals produced from the first transceiver's **100** transmitter **134** are then conveyed to the second transceiver **101** via the fiber **108**. The second transceiver **101,** in turn, receives the modulated light signals via the receiver circuitry **136**, converts the light signals to electrical signals, processes the electrical signals

using the communication logic and memory **132** (in accordance with an in-use network protocol) and, optionally, outputs the electrical data output signals (Data Out 1) **119**, as well as optional clock signals (Data Clock Out 1) **120**.

[0041] Similarly, the second transceiver **101** receives electrical data input signals (Data IN 1) **123**, as well as any optional clock signals (Data Clock IN) **124**, from an external data source (not shown) for processing by the communication logic and memory **132** and transmission by the transmitter circuitry **135**. The resulting modulated light signals produced from the second transceiver's **101** transmitter **135** are then conveyed to the first transceiver **100** using the optical fiber **108**. The first transceiver **100,** in turn, receives the modulated light signals via the receiver circuitry **133**, converts the light signals to electrical signals, processes the electrical signals using the communication logic and memory **131** (in accordance with an in-use network protocol), and, optionally, outputs the electrical data output signals (Data Out 1) **127**, as well as any optional clock signals (Data Clock Out 1) **128**.

[0042] Fiber optic data network **50** may also include a plurality of electrical input and clock input signals, denoted herein as Data IN N **117/125** and Data Clock IN N **118/126**, respectively, and a plurality of electrical output and clock output signals, denoted herein as Data Out N **129/121** and Data Clock Out N **130/122**, respectively. The information provided by the plurality of electrical input signals may or may not be used by a given transceiver to transmit information via the fiber **108** and, likewise, the information received via the fiber **108** by a given transceiver may or may not be outputted by the plurality of electrical output signals. The plurality of electrical signals denoted above can be combined to form data plane or control plane bus(es) for input and output signals respectively. In some implementations, the plurality of electrical data input signals and electrical data output signals are used by logic devices or other devices located outside (not shown) a given transceiver to communicate with the transceiver's communication logic and memory **131, 132**, transmit circuitry **134, 135**, and/or receive circuitry **133,136**.

[0043] **FIG. 2** illustrates an implementation of a passive optical network (PON) **52**, where the functions described above associated with the first transceiver **100** and the second transceiver **101** of **FIG. 1**, are implemented in an optical line terminator

(OLT) **150** and one ore more optical networking units (ONU) **155,** and/or optical networking terminals (ONT) **160**, respectively. PON(s) **52** may be configured in either a point-to-point network architecture, wherein one OLT **150** is connected to one ONT **160** or ONU **155**, or a point-to-multipoint network architecture, wherein one OLT **150** is connected to a plurality of ONT(s) **160** and/or ONU(s) **155**. In the implementation shown in **FIG. 2,** an OLT **150** is in communication with multiple ONTs/ONUs **160**, **155** via a plurality of optical fibers **152**. The fiber **152** coupling the OLT **150** to the PON **52** is also coupled to other fibers **152** connecting the ONTs/ONUs **160**, **155** by one or more passive optical splitters **157**. All of the optical elements between an OLT and ONTs/ONUs are often referred to as the Optical Distribution Network (ODN). Other alternate network configurations, including alternate implementations of point-to-multipoint networks are also possible.

[0044] **FIG. 3** shows a system block diagram for an implementation of transceiver **100**. It will be appreciated that, while not always shown, one or more elements or blocks in the following embodiments may be sealed in one or more faraday cages or combined with blocks in faraday cages already shown. It will also be appreciated that, while not shown, one or more elements or blocks in the following embodiments may be combined onto one or more integrated circuits (IC) or surface mount photonic (SMP) devices. The following is a description of the functions and responsibilities that are part of an implementation of the Communication Logic & Memory **131** of transceiver **100.** The Communication Logic & Memory **131** includes an asynchronous or synchronous system transmit (TX) interface **301** and receive (RX) interface **302** that is supported by the TX Path **303** and RX Path **304** blocks. System interfaces **301**,**302** and management or control interfaces can be selected from conventional interfaces including serial, serial XFI, parallel, GMII, XGMII, SGMII, RGMII or XAUI or some other interface may be used. TX Path **303** and RX Path **304** blocks manage the TX and RX interfaces **301,302** and feed data into and get data from the transmission convergence layer or media access control (TC-Layer/MAC) block **305**. TX Path **303** and RX Path **304** blocks may perform line code adaptation functions (e.g., line coding used outside the transceiver can be terminated by a TX Path block **303** or sourced by a RX Path block **304** to allow a bit stream, cell, frame, and/or packet formatted data

to be adapted for processing by a TC-Layer/MAC block **305**). The TC-Layer/MAC **305** block creates the transport system that the data traffic, management and control agents will exploit. TC-Layer/MAC **305** block includes a TC-layer protocol stack such as specified in the ITU G.984 specification (incorporated herein by reference), IEEE 802.3ah MAC protocol stack specification (incorporated herein by reference) or a derivative thereof. A variety of other protocol stacks may also be used. The TC-Layer/MAC **305** block may perform the additional functions of equalizer, coding, queue and demultiplexing management. The TC-Layer/MAC **305** block sends transmit data to a DeMux **306** block, which splits the transmitting data into a plurality of data paths (two paths shown in **FIG. 3**) for demultiplexing data across multiple fibers. Some implementations need not include DeMux **306** block (and hence do not support demultiplexing data across multiple fibers). DeMux **306** block may demultiplex data across a subset of fibers to exclude fibers experiencing link failure to ensure data communications continue. The exclusion of fiber links experiencing failure is controlled by the TC-Layer/MAC **305** block as part of the demultiplexing management function.

[0045] After DeMux **306** block, in one implementation, the transmit paths have analogous processing blocks. In an alternative implementation, independent signal processing can be supported in each path. **FIG. 3** shows two transmit paths, though more can be included. In a transmit path, the transmit data is provided to the outer coder **307a, 307b** block. In one implementation, outer coder **307a** performs a reed-solomon coding. The outer coder **307a, 307b** block provides data to the inner coder **308a, 308b** block. In order to improve the energy per bit required to deliver the transmitting data, an inner coder **308a, 308b** is used. Outer coder **307a, 307b** may be used to support forward error correction (FEC) recovery of bit(s) errors. In one implementation, inner coder **308a, 308b** implements a trellis coding method. Data from the inner coder **308a, 308b** is provided to Modulation (MOD) **309a, 309b** block. Alternatively, in some implementations, the outer coder **307a, 307b** and inner coder **308a, 308b** blocks are not used, and the output of the DeMux **306** block is provided directly to the MOD **309a, 309b** block. Other outer coding methods that work on bit or symbol streams of arbitrary length can be used, for example linear block codes

such as Low-density parity-check (LDPC) and convolutional codes such as Turbo code may be used. Other inner coding methods that are complementary to the outer code as well as inner coding methods that are designed to shape or control the relative intensity noise (RIN) of the optical transmitter to improve overall system performance may be used. For example, an inner coder that dynamically adapts to measured RIN or compensates for measured temperature or other artifacts of laser design may be used.

[0046] To increase the number of bits per symbol transmitted, m-ary modulation is performed in the MOD **309a, 309b** block. In one implementation, an m-ary modulation method such as Quadrature Amplitude Modulation (QAM), QAM-32, QAM-256, Pulse Amplitude Modulation (PAM), PAM-5, PAM-17, Quadrature Phase Shift Keying (QPSK), differential QPSK (DQPSK), return-to-zero QPSK (RZ-QPSK), dual-polarized QPSK (DP-QPSK), or Orthogonal Frequency Division Multiplexing (OFDM) is used. Other m-ary modulation communication methods can be used, in particular other coherent modulation techniques which are known in the art. After processing by the MOD **309a, 309b** block, the transmit data is converted to an analog signal by a Digital to Analog Converter (DAC) **310a, 310b**. In one implementation, DAC **310a, 310b** is configured to shape, condition or emphasize the signal for improved transmission performance. The DAC **310a, 310b** passes the transmit data via electrical signals **311a, 311b** to the laser driver (Driver) **312a, 312b** as part of an implementation of TX **134** in an Optical Module **326**. The driver **312a, 312b** drives an optical transmitter, such as the Laser Diode (LD) **313a, 313b**, which transmits light in response to transmit data signals received from the driver **312a, 312b**. The light emitted from LD **313a, 313b** is directed into the fibers **314a, 314b** with the aid of a fiber optic interface (not shown). The fiber optic interface may include the necessary components (e.g., filters) to implement WDM, CWDM or DWDM functions.

[0047] On the receive side of the transceiver **100** as part of an implementation of RX **133** in an Optical Module **326**, light propagated across an ODN (not shown in **FIG. 3**) travels over fibers **314a, 314b** through a fiber optic interface (not shown) and is received by an optical detector, such as the photo diode (PD) **315a, 315b**. In

response, the PD **315a, 315b** provides a photocurrent to the TransImpedance Amplifier (TIA) **316a, 316b** that converts the photocurrent into an electrical voltage signal. The electrical voltage signal from the TIA **316a, 316b** is then transmitted to a Linear Amplifier (LA) **317a, 317b** as a differential signal or a single-ended signal **318a, 318b**. The LA **317a, 317b** performs signal conditioning on the received electrical voltage signal to provide increased resolution and system performance. The LA **317a, 317b** provides an electrical signal **319a, 319b** to a Clock Data Recovery (CDR) and Equalization (EQ) **320a, 320b** block that recovers clock and data signals and performs equalization on the received data, which is then provided to a De-Mod & Inner Decoder **323a, 323b**. The CDR & EQ 3**20a, 320b** block may implement a blind equalization method or decision-directed equalization method. Blind equalization is discussed further below. Other equalization methods may be used, particularly those that aid the CDR. The De-Mod & Inner Decoder **323a, 323b** block performs complementary de-modulation to the m-ary modulation performed in the MOD **309a, 309b** block as well as a complementary decoding method to the coding method performed in the Inner Coder **308a, 308b** block. In one implementation, De-Mod & Inner Decoder **323a, 323b** includes a Viterbi decoder. Other decoding means may be used. Received data is then provided to the outer decoder **324a, 324b** block, which performs a complementary decode to the error detection and/or recovery method chosen in the outer coder **307a, 307b** block. After demodulation and decoding, the received data is then provided to the Mux **325** block that performs a complementary function to the DeMux **306** block. The combined received data is then provided to the TC-Layer/MAC **305**. In implementations without Outer Coder **307a, 307b** and Inner Coder **308a, 308b** blocks, the output of the CDR & EQ **320a, 320b** block is provided directly to the Mux **325** block.

[0048] The RX **133,136** and TX **134,135** circuitry of transceivers **100,101**, or portions thereof, for example, PD **315a, 315b** and LA **317a, 317b**, can be combined within industry standard optical modules. Common optical module standards are 300pin, XENPAK, X2, and XPAK transponders and XFP or SFP and SFP+ transceivers. These optical modules include unidirectional fiber links with one fiber link for transmit path and a second fiber link for the receive path. However, implementations

of optical modules **326, 401, 501** incorporate a plurality of bi-directional fiber links for transmitting demultiplexed data on separate fiber links. Any of a variety of optical couplers may be used to separate and/or combine light propagating into or out of the fiber links. These optical modules **326, 401, 501** used herein can conform to a form factor of standard optical modules such as the 300pin, XENPAK, X2, XPAK, XFP or SFP and SFP+. Other form factors may also be used.

[0049] Alternatively, in other implementations of transceiver **100**, functions described above may be integrated into various different components. For example, in the implementation of transceiver **100** shown in **FIG. 4**, various functions may be incorporated into optical module **401** such as: digital to analog conversion **310a, 310b**; analog to digital conversion **321a, 321b**; clock data recovery and equalization **320a, 320b**; m-ary modulation **309a, 309b**; m-ary de-modulation **323a, 323b**; inner coder **308a, 308b**; inner de-coder **323a, 323b**; outer coder **307a, 307b**; outer de-coder **324a, 324b**, and the De-Mux **306** and Mux **325** functions that enable demultiplexing across multiple fibers. The optical module **401** may have an interface that can connect to existing TC-Layer or MAC implementations currently produced. In another alternative implementation the digital to analog conversion **310a, 310b**; analog to digital conversion **321a, 321b,** and the clock data recovery **320a, 320b** functions are incorporated into an optical module (not shown). In yet another alternative implementation of the transceiver **100** as shown in **FIG. 5**, an optical module **501** includes the De-Mux **306** and Mux **325** functions enabling demultiplexing across multiple fibers. The optical module **501** may have an interface that can connect to existing TC-Layer or MAC implementations currently produced.

[0050] Alternative implementations of transceiver **100** utilizing a single fiber link **314a** (without demultiplexing across multiple fibers) are illustrated in **FIG. 6A-6B**. Alternatively, an implementation of the transceiver **100** may utilize multiple fiber links **314a, 314b** while not performing demultiplexing across multiple fibers, as illustrated in **FIG. 7**. In this implementation, the TC-Layer/MAC **701** block manages the fiber links as independent fiber links that all connect to the same end point(s) on the network. In one implementation, TC-Layer/MAC **701** block is a derivative of the Transmission Convergence Layer specified in ITU G.984 or MAC specified in IEEE

802.3ah, with the added functionality of queue management of the traffic across the plurality of independent fiber links. The TC-Layer/MAC **701** block may exclude use of one or more fiber links if the fiber link experiences a failure. This exclusion of failed fiber links enables the TC-Layer/MAC **701** block (i.e., queue management function) to continue providing service across a PON using the remaining active links. Each fiber can be deployed across physically different paths to provide optical fiber distribution path diversity and improved protection against failures. Failures may originate in the optical module or across elements of the ODN such as fiber or connector breaks.

Channel Equalization

[0051] An implementation for a channel equalization routine executed in the CDR & EQ **320a, 320b** block includes determining coefficient settings or weights that are applied to the received data to remove undesired information (e.g. intersymbol interference (ISI)) or noise from the received data and thereby increase the sensitivity, dynamic range of detecting signals and accuracy of receiving signals. Channel equalization can include a training or convergence period in which characteristics of the channel are learned or accounted for and coefficients, filter variables, or weights are adapted before or while processing the received data. Decision-directed equalization is an equalization method in which a known training sequence is sent during the training period and the receiver/transceiver uses the knowledge of the training sequence to learn about the channel characteristics. The training sequence can be multiplexed within a PON's TC-Layer framing protocol. Blind equalization is a process during which an unknown input data sequence is recovered from the output signal of an unknown channel (i.e., current equalization data for a given channel is unknown or otherwise unavailable). Other equalization methods may be used, digital signal processing methods, or methods that improve the accuracy of processing received data signals or improve the efficiency of processing received data signals (e.g., reducing data acquisition time, reducing power consumed) by saving or storing a first set of settings generated by processing data from a first ONU/ONT and then load previously saved second set of settings previously generated by processing data from

a second ONU/ONT before processing another set of data from the second ONU/ONT.

[0052] One mode of communications used by a PON, e.g., for upstream data traffic (ONU/ONT to OLT direction), is "burst mode" communications. For example, upstream communications on a PON may include a link shared among multiple clients or ONUs/ONTs via time division multiplexing under control by an OLT. The upstream direction is divided into time slots; each time slot includes a defined number of bits. A given ONU/ONT is granted some number of time slots during which to transmit an upstream frame of data to an OLT. The upstream direction uses an orchestrated collection of bursts from the different ONU/ONTs, coordinated by the OLT that tries to maximize upstream traffic bandwidth efficiency by minimizing empty slots.

[0053] A flow chart for an exemplary upstream burst mode communication equalization process is shown in **FIG. 8A**. To read or interpret the upstream data traffic from a client ONU/ONT, an OLT trains and/or equalizes the channel for that client ONU/ONT. Since the ONU/ONTs may be at different distances from the OLT and all do not share the same fiber, different channel characteristics result. Communication efficiencies may be obtained by determining **800** a set of equalization coefficients for a channel during a burst from a client, saving **801** the determined equalization coefficients, entering a wait period **802** (also known as a PON's silence period when no client ONU/ONTs are transmitting upstream), and loading **803** the stored equalization coefficients before a next burst from the client (during the wait period), to avoid re-training or re-equalizing on every burst communication. The OLT has prior knowledge of which ONU/ONT will be transmitting data during which time slots and can use this knowledge during the time between burst communications (during the wait period) to load **803** an appropriate set of coefficients pertaining to the particular ONU/ONT transmitting prior to receiving **804** its next upstream burst. This process continues for subsequent bursts. In one implementation, periodic (though not coincident with each communication burst) updates to the channel characteristics may be made (and stored). The OLT can save **801** coefficients that have converged or have been trained after receiving burst

communications from the first ONU/ONT and load **803** a new set of coefficients during the wait period between bursts (i.e., before an incoming upstream burst from a second ONU/ONT). In another exemplary implementation, the OLT can save or store **801** coefficients or settings during the wait period **802** between burst as shown in **FIG. 8B**. In one implementation, in addition to or alternative to storage of coefficient data, the OLT may also save and load inner and/or outer coding states between bursts improving the efficiency of communication, similar to the equalization process of **FIG. 8A-8B**. Other methods that improve the accuracy and efficiency of processing burst mode data from specific ONUs/ONTs may be used following a similar process.

[0054] Another mode of communications used by a PON, e.g., for downstream data traffic (OLT to ONU/ONT direction), is "continuous mode" communications. In one implementation, a receiver, such as an ONU/ONT, equalizes a received data channel using either one of a blind equalization or a decision directed equalization method.

[0055] A flow chart for an exemplary PON activation process is shown in **FIG. 9**. In a PON in which a decision directed method is used for training an ONU/ONT receiver, a continuous mode transmitter, such as an OLT transmitter, sends a training sequence **900** multiplexed within a PON's TC-Layer downstream frame protocol. In a PON in which a blind equalization method is used, the OLT needed not send this training sequence **900**. An ONU/ONT equalizes its received downstream channel **901** before it is able to receive and interpret PON network parameters **902**. If the OLT has not been previously informed of the existence of the ONU/ONT then the ONU/ONT awaits an upstream grant window **903** available for new ONU/ONTs to respond to the OLT with its serial number **904**. After the ONU/ONT has received an upstream grant window and processed PON system parameters, the ONU/ONT sends a training sequence **905** and then its serial number **904** to the OLT. In a PON in which blind equalization is used the ONU/ONT need not send a training sequence **905**. After the OLT has received the ONU/ONT serial number the OLT will assign and send the ONU/ONT an identification number. If the ONU/ONT does not receive an identification number **906a**, the ONU/ONT returns to waiting for an upstream grant window for new ONU/ONTs **903**. Once the ONU/ONT receives an identification

number **906b**, the OLT performs ranging **907** to determine the distance between the OLT and ONU/ONT and then compensates for the communication timing delays. The ONU/ONT can perform updates continuously or periodically depending on the equalization method employed. After the downstream continuous mode channel and the upstream burst mode channel have been equalized, both ends of the PON transmission link are equalized and the ONU/ONT enters its normal operating state **908**.

Link Connection Errors

[0056] A system has been proposed that includes demultiplexing across multiple fibers as is shown above with reference to **FIG.s 3-6.** In systems using demultiplexing across multiple fibers, fibers can be connected incorrectly at installation. For example, a first transceiver **100**, such as is shown in **FIG. 3**, with fibers **314a** and **314b** can be connected to a second transceiver **101** with fiber **314b** connected in place of fiber **314a**, and fiber **314a** connected in place of fiber **314b**. The incorrect connection in this example may cause the first and second transceivers to not establish communications due to misalignment of bits during multiplexing of received data.

[0057] Information in a frame is used to synchronize a receiver (e.g., transceiver **101**) with the beginning of a frame (e.g., a "frame delimiter"). The process of discovering the beginning of a frame is called "frame synchronization." In specific protocols such as G.984, the downstream frame delimiter is called Psync, the upstream frame delimiter is called Delimiter and the process of frame synchronization in the downstream is called the HUNT. In one implementation, TC-Layer/MAC **305** block performs frame synchronization. In one implementation, specific bit patterns or values for frame delimiters are used that are unique for each fiber to differentiate one fiber from another or the order of fiber connections to correctly multiplex received data. The use of unique frame delimiters allows the TC-Layer/MAC **305** block to change the alignment of received data bits during multiplexing to adjust for the order of the fiber connections, without having to physically change the connections. Management of the bit alignment in this implementation forms part of the TC-Layer/MAC's **305** block demultiplexing management responsibilities and functions.

[0058] Alternatively, the TC-Layer/MAC **305** block may assume an order for the fiber connections to determine the alignment of bits for multiplexing the received data and attempt frame synchronization. After a period of time with no frame synchronization success, the TC-Layer/MAC **305** block may assume a different order for the fiber connections and change the alignment of bits during multiplexing and attempt frame synchronization again. The process may repeat, including changing the alignment of bits to reflect other configurations during the multiplexing, and frame synchronization attempts continue until frame synchronization succeeds. In yet another alternative implementation, the TC-Layer/MAC **305** block may assume and attempt frame synchronization on all possible combinations of bit alignments in parallel, one of which will succeed in achieving frame synchronization.

[0059] Although the invention has been described in terms of particular implementations, one of ordinary skill in the art, in light of this teaching, can generate additional implementations and modifications without departing from the spirit of or exceeding the scope of the claimed invention. Accordingly, it is to be understood that the drawings and descriptions herein are proffered by way of example to facilitate comprehension of the invention and should not be construed to limit the scope thereof.

Electronic Patent Application Fee Transmittal

Application Number:	
Filing Date:	
Title of Invention:	SYSTEM AND METHOD FOR PERFORMING HIGH-SPEED COMMUNICATIONS OVER FIBER OPTICAL NETWORKS
First Named Inventor/Applicant Name:	Alexander Soto
Filer:	Alexander Ivan Soto
Attorney Docket Number:	UBI-002E

Filed as Small Entity

Filing Fees for Utility under 35 USC 111(a)

Description	Fee Code	Quantity	Amount	Sub-Total in USD($)
Basic Filing:				
UTILITY FILING FEE (ELECTRONIC FILING)	4011	1	75	75
UTILITY EXAMINATION FEE	2311	1	380	380
Pages:				
Claims:				
CLAIMS IN EXCESS OF 20	2202	3	50	150
Miscellaneous-Filing:				
Petition:				
Patent-Appeals-and-Interference:				

Description	Fee Code	Quantity	Amount	Sub-Total in USD($)
Post-Allowance-and-Post-Issuance:				
Extension-of-Time:				
Miscellaneous:				
		Total in USD ($)		**605**

Electronic Acknowledgement Receipt

EFS ID:	31653606
Application Number:	15884351
International Application Number:	
Confirmation Number:	6829
Title of Invention:	SYSTEM AND METHOD FOR PERFORMING HIGH-SPEED COMMUNICATIONS OVER FIBER OPTICAL NETWORKS
First Named Inventor/Applicant Name:	Alexander Soto
Customer Number:	93749
Filer:	Alexander Ivan Soto
Filer Authorized By:	
Attorney Docket Number:	UBI-002E
Receipt Date:	30-JAN-2018
Filing Date:	
Time Stamp:	22:53:01
Application Type:	Utility under 35 USC 111(a)

Payment information:

Submitted with Payment	yes
Payment Type	CARD
Payment was successfully received in RAM	$605
RAM confirmation Number	013118INTEFSW22550600
Deposit Account	
Authorized User	
The Director of the USPTO is hereby authorized to charge indicated fees and credit any overpayment as follows:	

File Listing:

Document Number	Document Description	File Name	File Size(Bytes)/ Message Digest	Multi Part /.zip	Pages (if appl.)
1	Abstract	UBI-002E_abstract.pdf	68166 382042ddcb33568d7f8efffc48f66acc5c06601b	no	1
Warnings:					
Information:					
2	Application Data Sheet	UBI-002E_ADS.pdf	1823491 5686a29b5638e195c752d386a36b59eff7950026	no	9
Warnings:					
Information:					
3	Claims	UBI-002E_claims_v10.pdf	64216 cea36e152f9b2e42692cc44d2a8f7aa005788ffa	no	4
Warnings:					
Information:					
4	Drawings-only black and white line drawings	UBI-002E_drawings.pdf	108646 cc1602853002e5c982bc803214241513b6204f3c	no	9
Warnings:					
Information:					
5	Oath or Declaration filed	UBI-002E_declaration_alex.pdf	181137 06c986a16d8e7953df0135682f23b7d42cdc410d	no	2
Warnings:					
Information:					
6	Oath or Declaration filed	UBI-002E_declaration_walt.pdf	186656 1dc1c562931be0970641570375bf5c0a274d1f67	no	2
Warnings:					
Information:					

7	Specification	UBI-002E_specification.pdf	170636 c7edef5d08fe99f9e7a0838640f5316d348c8f0d	no	22
Warnings:					
Information:					
8	Fee Worksheet (SB06)	fee-info.pdf	35114 b5c7a5a2131e8f3a02962bcf7b7585f6b96a9856	no	2
Warnings:					
Information:					
		Total Files Size (in bytes):	2638062		

This Acknowledgement Receipt evidences receipt on the noted date by the USPTO of the indicated documents, characterized by the applicant, and including page counts, where applicable. It serves as evidence of receipt similar to a Post Card, as described in MPEP 503.

<u>New Applications Under 35 U.S.C. 111</u>
If a new application is being filed and the application includes the necessary components for a filing date (see 37 CFR 1.53(b)-(d) and MPEP 506), a Filing Receipt (37 CFR 1.54) will be issued in due course and the date shown on this Acknowledgement Receipt will establish the filing date of the application.
<u>National Stage of an International Application under 35 U.S.C. 371</u>
If a timely submission to enter the national stage of an international application is compliant with the conditions of 35 U.S.C. 371 and other applicable requirements a Form PCT/DO/EO/903 indicating acceptance of the application as a national stage submission under 35 U.S.C. 371 will be issued in addition to the Filing Receipt, in due course.
<u>New International Application Filed with the USPTO as a Receiving Office</u>
If a new international application is being filed and the international application includes the necessary components for an international filing date (see PCT Article 11 and MPEP 1810), a Notification of the International Application Number and of the International Filing Date (Form PCT/RO/105) will be issued in due course, subject to prescriptions concerning national security, and the date shown on this Acknowledgement Receipt will establish the international filing date of the application.