UNITED STATES PATENT AND TRADEMARK OFFICE

UNITED STATES DEPARTMENT OF COMMERCE
United States Patent and Trademark Office
Address: COMMISSIONER FOR PATENTS
P.O. Box 1450
Alexandria, Virginia 22313-1450
www.uspto.gov

APPLICATION NO.	FILING DATE	FIRST NAMED INVENTOR	ATTORNEY DOCKET NO.	CONFIRMATION NO.
11/772,187	06/30/2007	Alexander I. Soto	UBI-002B (Ab)	9145

7590 08/28/2009

JAMES ALBERT WARD
6924 CAMINO PACHECO
SAN DIEGO, CA 92111

EXAMINER
PHAN, HANH

ART UNIT	PAPER NUMBER
2613	

NOTIFICATION DATE	DELIVERY MODE
08/28/2009	ELECTRONIC

Notice of Abandonment

This application is abandoned in view of:

1. ☐ The applicant's failure to timely file a proper reply to the Office letter mailed on _____.
   (a) ☐ A reply was received on _____ (with a Certificate of Mailing or Transmission date _____), which is after the expiration of the period for reply (including a total extension of ____ month(s)) which expired on _____.
   (b) ☐ No reply has been received.
2. ☒ Applicant's failure to timely pay the required issue fee and publication fee, if applicable, within the statutory period of three months from the mailing date of the Notice of Allowance (PTOL-85).
   (a) ☐ The issue fee and publication fee, if applicable, was received on _____ (with a Certificate of Mailing or Transmission date _____), which is after the expiration of the statutory period for payment of the issue fee (and publication fee) set in the Notice of Allowance (PTOL-85).
   (b) ☐ The submitted fee of $_____ is insufficient. A balance of $_____ is due.
   The issue fee required by 37 CFR 1.18 is $_____.
   The publication fee, if required by 37 CFR 1.18(d), is $_____.
   (c) ☒ The issue fee and publication fee, if applicable, has not been received.
3. ☐ Applicant's failure to timely file corrected drawings as required by, and within the three-month period set in, the Notice of Allowability (PTO-37).
   (a) ☐ Proposed corrected drawings were received on _____ (with a Certificate of Mailing or Transmission dated _____), which is after the expiration of the period for reply.
   (b) ☐ No corrected drawing have been received.
4. ☐ The letter of express abandonment which is signed by the attorney or agent of record, the assignee of the entire interest, or all of the applicants.
5. ☐ The letter of express abandonment which is signed by an attorney or agent (acting in a representative capacity under 37 CFR 1.34(a)) upon the filling of a continuing application.
6. ☐ Drawings received on _____ were disapproved by examiner. See examiner's response dated _____.
7. ☐ Corrected drawings were received on _____ , which is after the expiration of the one-month period for reply set in examiner's response dated _____.
8. ☐ No corrected drawings have been received in reply to one-month period set in examiner's response dated _____.
9. ☐ The reason(s) below:

Petitions to revive under 37 CFR 1.137(a) or (b), or request to withdraw the holding of abandonment under 37 CFR 1.181, should be promptly filed to minimize any negative effects on patent term.

(571)-272-4200 or 1(888)-786-0101
Patent Publication Branch
Office of Data Management

UNITED STATES PATENT AND TRADEMARK OFFICE

UNITED STATES DEPARTMENT OF COMMERCE
United States Patent and Trademark Office
Address: COMMISSIONER FOR PATENTS
P.O. Box 1450
Alexandria, Virginia 22313-1450
www.uspto.gov

NOTICE OF ALLOWANCE AND FEE(S) DUE

50625 7590 04/30/2009

JAMES ALBERT WARD
6924 CAMINO PACHECO
SAN DIEGO, CA 92111

EXAMINER	
PHAN, HANH	
ART UNIT	PAPER NUMBER
2613	

DATE MAILED: 04/30/2009

APPLICATION NO.	FILING DATE	FIRST NAMED INVENTOR	ATTORNEY DOCKET NO.	CONFIRMATION NO.
11/772,187	06/30/2007	Alexander I. Soto	UBI-002B	9145

TITLE OF INVENTION: SYSTEM AND METHOD FOR PERFORMING HIGH-SPEED COMMUNICATIONS OVER FIBER OPTICAL NETWORKS

APPLN. TYPE	SMALL ENTITY	ISSUE FEE DUE	PUBLICATION FEE DUE	PREV. PAID ISSUE FEE	TOTAL FEE(S) DUE	DATE DUE
nonprovisional	YES	$755	$300	$0	$1055	07/30/2009

THE APPLICATION IDENTIFIED ABOVE HAS BEEN EXAMINED AND IS ALLOWED FOR ISSUANCE AS A PATENT. PROSECUTION ON THE MERITS IS CLOSED. THIS NOTICE OF ALLOWANCE IS NOT A GRANT OF PATENT RIGHTS. THIS APPLICATION IS SUBJECT TO WITHDRAWAL FROM ISSUE AT THE INITIATIVE OF THE OFFICE OR UPON PETITION BY THE APPLICANT. SEE 37 CFR 1.313 AND MPEP 1308.

THE ISSUE FEE AND PUBLICATION FEE (IF REQUIRED) MUST BE PAID WITHIN THREE MONTHS FROM THE MAILING DATE OF THIS NOTICE OR THIS APPLICATION SHALL BE REGARDED AS ABANDONED. THIS STATUTORY PERIOD CANNOT BE EXTENDED. SEE 35 U.S.C. 151. THE ISSUE FEE DUE INDICATED ABOVE DOES NOT REFLECT A CREDIT FOR ANY PREVIOUSLY PAID ISSUE FEE IN THIS APPLICATION. IF AN ISSUE FEE HAS PREVIOUSLY BEEN PAID IN THIS APPLICATION (AS SHOWN ABOVE), THE RETURN OF PART B OF THIS FORM WILL BE CONSIDERED A REQUEST TO REAPPLY THE PREVIOUSLY PAID ISSUE FEE TOWARD THE ISSUE FEE NOW DUE.

HOW TO REPLY TO THIS NOTICE:

I. Review the SMALL ENTITY status shown above.

If the SMALL ENTITY is shown as YES, verify your current SMALL ENTITY status:

A. If the status is the same, pay the TOTAL FEE(S) DUE shown above.

B. If the status above is to be removed, check box 5b on Part B - Fee(s) Transmittal and pay the PUBLICATION FEE (if required) and twice the amount of the ISSUE FEE shown above, or

If the SMALL ENTITY is shown as NO:

A. Pay TOTAL FEE(S) DUE shown above, or

B. If applicant claimed SMALL ENTITY status before, or is now claiming SMALL ENTITY status, check box 5a on Part B - Fee(s) Transmittal and pay the PUBLICATION FEE (if required) and 1/2 the ISSUE FEE shown above.

II. PART B - FEE(S) TRANSMITTAL, or its equivalent, must be completed and returned to the United States Patent and Trademark Office (USPTO) with your ISSUE FEE and PUBLICATION FEE (if required). If you are charging the fee(s) to your deposit account, section "4b" of Part B - Fee(s) Transmittal should be completed and an extra copy of the form should be submitted. If an equivalent of Part B is filed, a request to reapply a previously paid issue fee must be clearly made, and delays in processing may occur due to the difficulty in recognizing the paper as an equivalent of Part B.

III. All communications regarding this application must give the application number. Please direct all communications prior to issuance to Mail Stop ISSUE FEE unless advised to the contrary.

IMPORTANT REMINDER: Utility patents issuing on applications filed on or after Dec. 12, 1980 may require payment of maintenance fees. It is patentee's responsibility to ensure timely payment of maintenance fees when due.

PTOL-85 (Rev. 08/07) Approved for use through 08/31/2010.

PART B - FEE(S) TRANSMITTAL

Complete and send this form, together with applicable fee(s), to: Mail **Mail Stop ISSUE FEE**
Commissioner for Patents
P.O. Box 1450
Alexandria, Virginia 22313-1450
or Fax (571)-273-2885

INSTRUCTIONS: This form should be used for transmitting the ISSUE FEE and PUBLICATION FEE (if required). Blocks 1 through 5 should be completed where appropriate. All further correspondence including the Patent, advance orders and notification of maintenance fees will be mailed to the current correspondence address as indicated unless corrected below or directed otherwise in Block 1, by (a) specifying a new correspondence address; and/or (b) indicating a separate "FEE ADDRESS" for maintenance fee notifications.

CURRENT CORRESPONDENCE ADDRESS (Note: Use Block 1 for any change of address)

50625 7590 04/30/2009

JAMES ALBERT WARD
6924 CAMINO PACHECO
SAN DIEGO, CA 92111

Note: A certificate of mailing can only be used for domestic mailings of the Fee(s) Transmittal. This certificate cannot be used for any other accompanying papers. Each additional paper, such as an assignment or formal drawing, must have its own certificate of mailing or transmission.

Certificate of Mailing or Transmission

I hereby certify that this Fee(s) Transmittal is being deposited with the United States Postal Service with sufficient postage for first class mail in an envelope addressed to the Mail Stop ISSUE FEE address above, or being facsimile transmitted to the USPTO (571) 273-2885, on the date indicated below.

(Depositor's name)

(Signature)

(Date)

APPLICATION NO.	FILING DATE	FIRST NAMED INVENTOR	ATTORNEY DOCKET NO.	CONFIRMATION NO.
11/772,187	06/30/2007	Alexander I. Soto	UBI-002B	9145

TITLE OF INVENTION: SYSTEM AND METHOD FOR PERFORMING HIGH-SPEED COMMUNICATIONS OVER FIBER OPTICAL NETWORKS

APPLN. TYPE	SMALL ENTITY	ISSUE FEE DUE	PUBLICATION FEE DUE	PREV. PAID ISSUE FEE	TOTAL FEE(S) DUE	DATE DUE
nonprovisional	YES	$755	$300	$0	$1055	07/30/2009

EXAMINER	ART UNIT	CLASS-SUBCLASS
PHAN, HANH	2613	398-135000

1. Change of correspondence address or indication of "Fee Address" (37 CFR 1.363).

❑ Change of correspondence address (or Change of Correspondence Address form PTO/SB/122) attached.

❑ "Fee Address" indication (or "Fee Address" Indication form PTO/SB/47; Rev 03-02 or more recent) attached. **Use of a Customer Number is required.**

2. For printing on the patent front page, list

(1) the names of up to 3 registered patent attorneys or agents OR, alternatively,

(2) the name of a single firm (having as a member a registered attorney or agent) and the names of up to 2 registered patent attorneys or agents. If no name is listed, no name will be printed.

1_____

2_____

3_____

3. ASSIGNEE NAME AND RESIDENCE DATA TO BE PRINTED ON THE PATENT (print or type)

PLEASE NOTE: Unless an assignee is identified below, no assignee data will appear on the patent. If an assignee is identified below, the document has been filed for recordation as set forth in 37 CFR 3.11. Completion of this form is NOT a substitute for filing an assignment.

(A) NAME OF ASSIGNEE (B) RESIDENCE: (CITY and STATE OR COUNTRY)

Please check the appropriate assignee category or categories (will not be printed on the patent) : ❑ Individual ❑ Corporation or other private group entity ❑ Government

4a. The following fee(s) are submitted:

❑ Issue Fee

❑ Publication Fee (No small entity discount permitted)

❑ Advance Order - # of Copies _____

4b. Payment of Fee(s): **(Please first reapply any previously paid issue fee shown above)**

❑ A check is enclosed.

❑ Payment by credit card. Form PTO-2038 is attached.

❑ The Director is hereby authorized to charge the required fee(s), any deficiency, or credit any overpayment, to Deposit Account Number _____ (enclose an extra copy of this form).

5. **Change in Entity Status** (from status indicated above)

❑ a. Applicant claims SMALL ENTITY status. See 37 CFR 1.27.

❑ b. Applicant is no longer claiming SMALL ENTITY status. See 37 CFR 1.27(g)(2).

NOTE: The Issue Fee and Publication Fee (if required) will not be accepted from anyone other than the applicant; a registered attorney or agent; or the assignee or other party in interest as shown by the records of the United States Patent and Trademark Office.

Authorized Signature _____ Date _____

Typed or printed name _____ Registration No. _____

This collection of information is required by 37 CFR 1.311. The information is required to obtain or retain a benefit by the public which is to file (and by the USPTO to process) an application. Confidentiality is governed by 35 U.S.C. 122 and 37 CFR 1.14. This collection is estimated to take 12 minutes to complete, including gathering, preparing, and submitting the completed application form to the USPTO. Time will vary depending upon the individual case. Any comments on the amount of time you require to complete this form and/or suggestions for reducing this burden, should be sent to the Chief Information Officer, U.S. Patent and Trademark Office, U.S. Department of Commerce, P.O. Box 1450, Alexandria, Virginia 22313-1450. DO NOT SEND FEES OR COMPLETED FORMS TO THIS ADDRESS. SEND TO: Commissioner for Patents, P.O. Box 1450, Alexandria, Virginia 22313-1450.

Under the Paperwork Reduction Act of 1995, no persons are required to respond to a collection of information unless it displays a valid OMB control number.

UNITED STATES PATENT AND TRADEMARK OFFICE

UNITED STATES DEPARTMENT OF COMMERCE
United States Patent and Trademark Office
Address: COMMISSIONER FOR PATENTS
P.O. Box 1450
Alexandria, Virginia 22313-1450
www.uspto.gov

APPLICATION NO.	FILING DATE	FIRST NAMED INVENTOR	ATTORNEY DOCKET NO.	CONFIRMATION NO.
11/772,187	06/30/2007	Alexander I. Soto	UBI-002B	9145

50625 7590 04/30/2009

JAMES ALBERT WARD
6924 CAMINO PACHECO
SAN DIEGO, CA 92111

EXAMINER
PHAN, HANH

ART UNIT	PAPER NUMBER
2613	

DATE MAILED: 04/30/2009

Determination of Patent Term Adjustment under 35 U.S.C. 154 (b)
(application filed on or after May 29, 2000)

The Patent Term Adjustment to date is 6 day(s). If the issue fee is paid on the date that is three months after the mailing date of this notice and the patent issues on the Tuesday before the date that is 28 weeks (six and a half months) after the mailing date of this notice, the Patent Term Adjustment will be 6 day(s).

If a Continued Prosecution Application (CPA) was filed in the above-identified application, the filing date that determines Patent Term Adjustment is the filing date of the most recent CPA.

Applicant will be able to obtain more detailed information by accessing the Patent Application Information Retrieval (PAIR) WEB site (http://pair.uspto.gov).

Any questions regarding the Patent Term Extension or Adjustment determination should be directed to the Office of Patent Legal Administration at (571)-272-7702. Questions relating to issue and publication fee payments should be directed to the Customer Service Center of the Office of Patent Publication at 1-(888)-786-0101 or (571)-272-4200.

PTOL-85 (Rev. 08/07) Approved for use through 08/31/2010.

Notice of Allowability	Application No.	Applicant(s)	
	11/772,187	SOTO ET AL.	
	Examiner	**Art Unit**	
	Hanh Phan	2613	

-- The MAILING DATE of this communication appears on the cover sheet with the correspondence address--

All claims being allowable, PROSECUTION ON THE MERITS IS (OR REMAINS) CLOSED in this application. If not included herewith (or previously mailed), a Notice of Allowance (PTOL-85) or other appropriate communication will be mailed in due course. **THIS NOTICE OF ALLOWABILITY IS NOT A GRANT OF PATENT RIGHTS.** This application is subject to withdrawal from issue at the initiative of the Office or upon petition by the applicant. See 37 CFR 1.313 and MPEP 1308.

1. ☒ This communication is responsive to *amendment filed on 02/06/2009*.

2. ☒ The allowed claim(s) is/are *2-18*.

3. ☐ Acknowledgment is made of a claim for foreign priority under 35 U.S.C. § 119(a)-(d) or (f).
   a) ☐ All b) ☐ Some* c) ☐ None of the:
      1. ☐ Certified copies of the priority documents have been received.
      2. ☐ Certified copies of the priority documents have been received in Application No. _____ .
      3. ☐ Copies of the certified copies of the priority documents have been received in this national stage application from the International Bureau (PCT Rule 17.2(a)).

   * Certified copies not received: _____.

Applicant has THREE MONTHS FROM THE "MAILING DATE" of this communication to file a reply complying with the requirements noted below. Failure to timely comply will result in ABANDONMENT of this application.
THIS THREE-MONTH PERIOD IS NOT EXTENDABLE.

4. ☐ A SUBSTITUTE OATH OR DECLARATION must be submitted. Note the attached EXAMINER'S AMENDMENT or NOTICE OF INFORMAL PATENT APPLICATION (PTO-152) which gives reason(s) why the oath or declaration is deficient.

5. ☐ CORRECTED DRAWINGS (as "replacement sheets") must be submitted.
   (a) ☐ including changes required by the Notice of Draftsperson's Patent Drawing Review (PTO-948) attached
      1) ☐ hereto or 2) ☐ to Paper No./Mail Date _____.
   (b) ☐ including changes required by the attached Examiner's Amendment / Comment or in the Office action of Paper No./Mail Date _____.

   Identifying indicia such as the application number (see 37 CFR 1.84(c)) should be written on the drawings in the front (not the back) of each sheet. Replacement sheet(s) should be labeled as such in the header according to 37 CFR 1.121(d).

6. ☐ DEPOSIT OF and/or INFORMATION about the deposit of BIOLOGICAL MATERIAL must be submitted. Note the attached Examiner's comment regarding REQUIREMENT FOR THE DEPOSIT OF BIOLOGICAL MATERIAL.

Attachment(s)

1. ☐ Notice of References Cited (PTO-892)
2. ☐ Notice of Draftperson's Patent Drawing Review (PTO-948)
3. ☐ Information Disclosure Statements (PTO/SB/08), Paper No./Mail Date _____
4. ☐ Examiner's Comment Regarding Requirement for Deposit of Biological Material
5. ☐ Notice of Informal Patent Application
6. ☐ Interview Summary (PTO-413), Paper No./Mail Date _____ .
7. ☐ Examiner's Amendment/Comment
8. ☐ Examiner's Statement of Reasons for Allowance
9. ☐ Other _____.

/Hanh Phan/
Primary Examiner, Art Unit 2613

A. Soto and M. Soto
IPR2023-00838
Exhibit 2001
Page 5

Issue Classification	Application/Control No.	Applicant(s)/Patent Under Reexamination
	11772187	SOTO ET AL.
	Examiner	**Art Unit**
	Hanh Phan	2613

ORIGINAL		INTERNATIONAL CLASSIFICATION										
CLASS	SUBCLASS	CLAIMED					NON-CLAIMED					
398	135	H	0	4	B	10 / 00 (2006.01.01)						

CROSS REFERENCE(S)

CLASS	SUBCLASS (ONE SUBCLASS PER BLOCK)				
398	66	67	68	72	128
398	130	183	202		
385	88	89	92	93	
375	233	321			

☐ Claims renumbered in the same order as presented by applicant ☐ CPA ☐ T.D. ☐ R.1.47

Final	Original	Final	Original	Final	Original	Final	Original	Final	Original	Final	Original	Final	Original	Final	Original
	1	16	17												
1	2	17	18												
2	3														
3	4														
4	5														
5	6														
6	7														
7	8														
8	9														
9	10														
10	11														
11	12														
12	13														
13	14														
14	15														
15	16														

NONE (Assistant Examiner) (Date)	**Total Claims Allowed:** 17	
/Hanh Phan/ Primary Examiner.Art Unit 2613 (Primary Examiner) 04/14/2009 (Date)	O.G. Print Claim(s) 1	O.G. Print Figure 3

Index of Claims	Application/Control No.	Applicant(s)/Patent Under Reexamination
	11772187	SOTO ET AL.
	Examiner	**Art Unit**
	Hanh Phan	2613

✓	Rejected	-	Cancelled	N	Non-Elected	A	Appeal
=	Allowed	÷	Restricted	I	Interference	O	Objected

☐ Claims renumbered in the same order as presented by applicant ☐ CPA ☐ T.D. ☐ R.1.47

CLAIM		DATE								
Final	Original	04/14/2009								
	1	-								
	2	=								
	3	=								
	4	=								
	5	=								
	6	=								
	7	=								
	8	=								
	9	=								
	10	=								
	11	=								
	12	=								
	13	=								
	14	=								
	15	=								
	16	=								
	17	=								
	18	=								

UNITED STATES PATENT AND TRADEMARK OFFICE

UNITED STATES DEPARTMENT OF COMMERCE
United States Patent and Trademark Office
Address: COMMISSIONER FOR PATENTS
P.O. Box 1450
Alexandria, Virginia 22313-1450
www.uspto.gov

BIB DATA SHEET

CONFIRMATION NO. 9145

SERIAL NUMBER	FILING or 371(c) DATE	CLASS	GROUP ART UNIT	ATTORNEY DOCKET NO.
11/772,187	06/30/2007 **RULE**	398	2613	UBI-002B

APPLICANTS

Alexander I. Soto, San Diego, CA;
Walter G. Soto, San Clemente, CA;

**** CONTINUING DATA ***************************

This application is a CON of 10/865,547 06/10/2004 PAT 7,242,868
which claims benefit of 60/477,845 06/10/2003
and claims benefit of 60/480,488 06/21/2003

**** FOREIGN APPLICATIONS ***************************

**** IF REQUIRED, FOREIGN FILING LICENSE GRANTED **** ** SMALL ENTITY **
07/19/2007

		STATE OR COUNTRY	SHEETS DRAWINGS	TOTAL CLAIMS	INDEPENDENT CLAIMS
Foreign Priority claimed ☐ Yes ☑ No 35 USC 119(a-d) conditions met ☐ Yes ☑ No Verified and Acknowledged /HANH PHAN/ Examiner's Signature	☐ Met after Allowance Initials	CA	7	1	1

ADDRESS

JAMES ALBERT WARD
6924 CAMINO PACHECO
SAN DIEGO, CA 92111
UNITED STATES

TITLE

SYSTEM AND METHOD FOR PERFORMING HIGH-SPEED COMMUNICATIONS OVER FIBER OPTICAL NETWORKS

FILING FEE RECEIVED		
425	FEES: Authority has been given in Paper No._____ to charge/credit DEPOSIT ACCOUNT No._____ for following:	☐ All Fees ☐ 1.16 Fees (Filing) ☐ 1.17 Fees (Processing Ext. of time) ☐ 1.18 Fees (Issue) ☐ Other _____ ☐ Credit

Search Notes	Application/Control No.	Applicant(s)/Patent Under Reexamination
	11772187	SOTO ET AL.
	Examiner	**Art Unit**
	Hanh Phan	2613

SEARCHED

Class	Subclass	Date	Examiner
398	72, 66, 67, 68, 70, 71, 79, 187, 183, 190, 192, 194, 202, 208, 209, 210, 154, 155, 158, 159, 147, 164, 135, 128, 130, 136, 138, 139, 188, 189	04/14/2009	HP
375	233, 321	04/14/2009	HP
385	88, 89, 92, 93	04/14/2009	HP
UPDATE SEARCH		04/14/2009	HP

SEARCH NOTES

Search Notes	Date	Examiner
EAST SEARCH SEE ATTACHED PRINTOUT IN THE FILE	04/14/2009	HP
IEEE SEARCH	04/14/2009	HP
JPO SEARCH	04/14/2009	HP
PG PUB TEXT SEARCH SEE INTERFERENCE SEARCH PRINTOUT	04/14/2009	HP

INTERFERENCE SEARCH

Class	Subclass	Date	Examiner
398	66, 67, 68, 70, 71, 72, 79, 183, 187, 188, 189, 192, 194, 190, 202, 208, 209, 210, 154, 155, 158, 159, 147, 164, 135, 128, 130, 136, 138, 139	04/14/2009	HP
385	88, 89, 92, 93	04/14/2009	HP
375	233, 321	04/14/2009	HP

EAST Search History

Ref #	Hits	Search Query	DBs	Default Operator	Plurals	Time Stamp
L1	5	(("7242368") or ("7266310") or ("20030007211") or ("20010035997") or ("7155134")).PN.	US-PGPUB; USPAT; USOCR	OR	OFF	2009/04/27 08:08
L2	5	(("7242868") or ("7266310") or ("20030007211") or ("20010035997") or ("7155134")).PN.	US-PGPUB; USPAT; USOCR	OR	OFF	2009/04/27 08:11
L3	1	398/135-139.ccls. and CDR and equalizer and "m-ary"	US-PGPUB; USPAT; USOCR	OR	ON	2009/04/27 08:14
L4	3	"398"/$.ccls. and CDR and equalizer and "m-ary"	US-PGPUB; USPAT; USOCR	OR	ON	2009/04/27 08:14
L5	130	"398"/$.ccls. and "m-ary"	US-PGPUB; USPAT; USOCR	OR	ON	2009/04/27 08:15
L6	7	("5150247" | "5363408" | "5835532" | "5880863" | "6067319" | "6490727" | "6950477").PN.	US-PGPUB; USPAT; USOCR	OR	ON	2009/04/27 08:24
L7	15	398/66-72.ccls. and QAM and equalizer	US-PGPUB; USPAT; USOCR	OR	ON	2009/04/27 08:28
L8	54	398/66-72.ccls. and equalizer	US-PGPUB; USPAT; USOCR	OR	ON	2009/04/27 08:29
L9	1030	"398"/$.ccls. and equalizer	US-PGPUB; USPAT; USOCR	OR	ON	2009/04/27 08:47
L10	669	"398"/$.ccls. and equalizer and @ad<"20030610"	US-PGPUB; USPAT; USOCR	OR	ON	2009/04/27 08:48
L11	0	(amplifier and clock and (data adj recovery) and demodulator and (optical adj transceiver) and modulator and driver and transmitter and detector and equalizer).CLM.	US-PGPUB; USPAT; USOCR	OR	ON	2009/04/27 09:00

S1	4	"398"/$.ccls. and DQPSK and (phase adj estimation)	US-PGPUB; USPAT; USOCR	OR	ON	2009/04/26 20:24
S2	41	DQPSK and (phase adj estimation)	US-PGPUB; USPAT; USOCR	OR	ON	2009/04/26 20:25
S3	2234	DQPSK	US-PGPUB; USPAT; USOCR	OR	ON	2009/04/26 20:35
S4	1868	DQPSK and @ad<"20060227"	US-PGPUB; USPAT; USOCR	OR	ON	2009/04/26 20:35
S5	1760	DQPSK and @ad<"20060227" and phase	US-PGPUB; USPAT; USOCR	OR	ON	2009/04/26 20:35
S6	1485	DQPSK and @ad<"20060227" and phase and quadrature	US-PGPUB; USPAT; USOCR	OR	ON	2009/04/26 20:36
S7	975	DQPSK and @ad<"20060227" and phase and quadrature and delay	US-PGPUB; USPAT; USOCR	OR	ON	2009/04/26 20:36
S8	113	liu-xiang.in.	US-PGPUB; USPAT; USOCR	OR	ON	2009/04/26 21:01
S9	4	(("7171124") or ("6996342") or ("20050271038") or ("7095956")).PN.	US-PGPUB; USPAT; USOCR	OR	OFF	2009/04/26 22:01

4/27/09 9:01:26 AM

	PATENTS **Docket No. UBI-002B**
IN THE UNITED STATES PATENT AND TRADEMARK OFFICE	
In re Application of: **Alexander I. Soto *et al.***	
Patent Application No.: **11/772,187**	Group Art Unit: **2613**
Filed on: **June 30, 2007**	
For: **SYSTEM AND METHOD FOR PERFORMING HIGH-SPEED COMMUNICATIONS OVER FIBER OPTICAL NETWORKS**	Examiner: PHAN, HANH

Commissioner for Patents
Mail Stop Amendment
PO Box 1450
Alexandria, VA 22313-4150

RESPONSE PER 37 C.F.R. §1.111

Responsive to the Office Action mailed on October 06, 2008, please enter the following amendment and response in the above-entitled Patent Application. A Petition for a one-month Extension of Time per 37 C.F.R. §1.136(a) is submitted herewith.

Amendments to the Claims:

Kindly amend the claims in accordance with the following claim listing:

Complete Listing of Claims:

1. (Canceled)

2. (New) An optical transceiver module of an Optical Line Terminal in a passive optical network for transmitting continuous mode optical data signals on a first wavelength according to an m-ary modulation format and to equalize an optical data channel responsive to a received burst mode optical data signal on a second wavelength over a fiber optic cable, the optical transceiver module further comprising:

a modulator configured to generate a first m-ary modulation signal representative of a first electrical binary continuous mode input data signal;

a driver electrically coupled to the modulator configured to amplify the first m-ary modulation signal in order to drive an optical transmitter;

an optical continuous mode transmitter electrically coupled to the driver configured to emit a first optical signal on the first wavelength on the fiber optic cable representative of the amplified first m-ary modulation signal;

an optical detector configured to receive a second burst mode optical signal on the second wavelength from the fiber optic cable and generate a representative second electrical signal;

an amplifier electrically coupled to the optical detector and configured to amplify the second electrical signal to facilitate clock and data recovery;

a clock and data recovery unit electrically coupled to the amplifier configured to generate a third electrical signal representative of the amplified second electrical signal;

an equalizer electrically coupled to the clock and data recovery unit and configured to equalize a burst mode channel from the third electrical signal and generate a second m-ary modulation signal; and

a de-modulator electrically coupled to the equalizer configured to generate a

second electrical binary output data signal representative of the second m-ary modulation signal.

3. (New) The optical transceiver module of claim 2, wherein the form factor of the optical transceiver module is selected from the group consisting essentially of: SFP; XFP; X2; XENPAK; XPA; and 300 pin transceiver form factors.

4. (New) The optical transceiver module of claim 2, wherein the m-ary modulation format is selected from the group essentially consisting of:

quadrature amplitude modulation; and

pulse amplitude modulation.

5. (New) The optical transceiver module of claim 2, wherein equalizing routine employed by the equalizer is selected from the group consisting of: a blind equalization routine that does not use a known training sequence and decision-directed equalization routine using a known training sequence.

6. (New) The optical transceiver module of claim 5, wherein the known training sequence of a decision-directed equalization routine is multiplexed in a frame of the received second burst mode optical signal.

7. (New) The optical transceiver module of claim 2, further comprising:

means for storing a first set of determined equalization coefficients for a first optical channel associated with a first client on the passive optical network;

means for loading a predetermined second set of equalization coefficients for a second optical channel associated with a second client on the passive optical network; and

whereby the saving and loading occurs during time periods between received communication data bursts.

8. (New) The optical transceiver module of claim 2, further comprising:

an encoder coupled electrically to the input of the modulator and configured to encode the first electrical binary continuous mode input data signal with an error correction routine as output to the modulator; and

a decoder coupled electrically to the output of the demodulator and configured to decode the second electrical binary output data signal and correct for errors.

9. (New) The optical transceiver module of claim 8, wherein the error correction routine is selected from the group essentially consisting of Reed-Solomon coding and trellis coding.

10. (New) The optical transceiver module of claim 2, wherein the passive optical network is a dense wavelength division multiplexing (DWDM) passive optical network and an M number of wavelengths are transmitted and an N number of wavelengths are received over the fiber optic cable, the optical transceiver module further comprising:

an M number of modulators coupled respectively to an M number of drivers coupled respectively to an M number of optical transmitters such that a respective M number of optical m-ary modulated signals are transmitted over the fiber optic cable; and

an N number of optical detectors coupled respectively to an N number of amplifiers coupled respectively to an N number of clock and data recovery units coupled respectively to an N number of equalizers coupled to an N number of de-modulators such that a respective N number of binary modulated electrical signals are generated responsive to an N number of received optical data signals received over the fiber optic cable.

11. (New) An optical transceiver module of an Optical Network Unit or Optical Network Terminal in a passive optical network for transmitting burst mode optical data signals on a first wavelength according to an m-ary modulation format and to equalize an optical data channel responsive to a received continuous mode optical data signal over a fiber optic cable, the optical transceiver module further comprising:

a modulator configured to generate a first m-ary modulation signal representative of a first electrical binary burst mode input data signal;

a driver electrically coupled to the modulator configured to amplify the first m-ary

modulation signal in order to drive an optical transmitter;

an optical burst mode transmitter electrically coupled to the driver configured to emit a first optical signal on the first wavelength on the fiber optic cable representative of the amplified first m-ary modulation signal;

an optical detector configured to receive a second continuous mode optical signal on the second wavelength from the fiber optic cable and generate a representative second electrical signal;

an amplifier electrically coupled to the optical detector and configured to amplify the second electrical signal to facilitate clock and data recovery;

a clock and data recovery unit electrically coupled to the amplifier configured to generate a third electrical signal representative of the amplified second electrical signal;

an equalizer electrically coupled to the clock and data recovery unit and configured to equalize a continuous mode channel from the third electrical signal and generate a second m-ary modulation signal; and

a de-modulator electrically coupled to the equalizer configured to generate a second electrical binary output data signal representative of the second m-ary modulation signal.

12. (New) The optical transceiver module of claim 11, wherein the form factor of the optical transceiver module is selected from the group consisting essentially of: SFP; XFP; X2; XENPAK; XPA; and 300 pin transceiver form factors.

13. (New) The optical transceiver module of claim 11, wherein the m-ary modulation format is selected from the group essentially consisting of:

quadrature amplitude modulation; and

pulse amplitude modulation.

14. (New) The optical transceiver module of claim 11, wherein equalizing routine employed by the equalizer is selected from the group consisting of: a blind equalization routine that does not use a known training sequence and decision-directed equalization routine using a

known training sequence.

15. (New) The optical transceiver module of claim 14, wherein the known training sequence of a decision-directed equalization routine is multiplexed in a frame of the received second continuous mode optical signal.

16. (New) The optical transceiver module of claim 11, further comprising:

an encoder coupled electrically to the input of the modulator and configured to encode the first electrical binary burst mode input data signal with an error correction routine as output to the modulator; and

a decoder coupled electrically to the output of the demodulator and configured to decode the second electrical binary output data signal and correct for errors.

17. (New) The optical transceiver module of claim 16, wherein the error correction routine is selected from the group essentially consisting of Reed-Solomon coding and trellis coding.

18. (New) The optical transceiver module of claim 11, wherein the passive optical network is a dense wavelength division multiplexing (DWDM) passive optical network and an M number of wavelengths are transmitted and an N number of wavelengths are received over the fiber optic cable, the optical transceiver module further comprising:

an M number of modulators coupled respectively to an M number of drivers coupled respectively to an M number of optical transmitters such that a respective M number of optical m-ary modulated signals are transmitted over the fiber optic cable; and

an N number of optical detectors coupled respectively to an N number of amplifiers coupled respectively to an N number of clock and data recovery units coupled respectively to an N number of equalizers coupled to an N number of de-modulators such that a respective N number of binary modulated electrical signals are generated responsive to an N number of received optical data signals received over the fiber optic cable.

REMARKS

Introduction: Applicants herewith cancel claim 1 and add new claims 2-16 to better describe and claim that which Applicants consider to be the invention. Claims 2-16 remain in the application. Applicants respectfully request reexamination and reconsideration of claims 2-16.

Discussion of the Rejection of Claim 1: In the Office Action mailed on October 06, 2008, Examiner rejects claim 1 under 35 U.S.C. §103(a) for unpatentability over U.S. Pat. Appl. Pub. No. 2003/0007211 filed by Gummalla et al in view of US Patent No. 7,266,310 issued to Savory et al. Applicants cancel claim 1 herewith and add new claims 2-16 to better describe and claim that which Applicants consider to be the invention. Basis for the new claims may be found throughout the specification and drawings. Applicants respectfully suggest that this amendment overcomes the basis for the rejections and that all of the new claims 2-16 are patentable over the cited references, separately and in any combination.

Conclusion: Applicants respectfully request reexamination and reconsideration of the application as amended and solicit allowance of new claims 2-16 at an early date. A one-month extension of time is requested per 37 C.F.R. §1.136(a) and the requisite petition and $65 fee per 37 C.F.R. §1.17(a)(1) are submitted herewith.

Respectfully submitted,

/James Albert Ward #34014/

James A. Ward
Reg. No. 34,041
Customer No. 50,625
6924 Camino Pacheco
San Diego, Ca 92111
858-278-0828
jim@jward.org

PTO/SB/22 (01-09)
Approved for use through 02/28/2009. OMB 0651-0031
U.S. Patent and Trademark Office; U.S. DEPARMENT OF COMMERCE
Under the paperwork Reduction Act of 1995, no persons are required to respond to a collection of information unless it displays a valid OMB control number.

PETITION FOR EXTENSION OF TIME UNDER 37 CFR 1.136(a) **FY 2009** (*Fees pursuant to the Consolidated Appropriations Act, 2005 (H.R. 4818).*)	Docket Number (Optional) UBI-002B
Application Number 11/772,187	Filed June 30, 2007
For SYSTEM AND METHOD FOR PERFORMING HIGH-SPEED COMMUNICATIONS OVER FIBER OPTICA	
Art Unit 2613	Examiner PHAN, HANH

This is a request under the provisions of 37 CFR 1.136(a) to extend the period for filing a reply in the above identified application.

The requested extension and fee are as follows (check time period desired and enter the appropriate fee below):

		Fee	Small Entity Fee	
☑	One month (37 CFR 1.17(a)(1))	$130	$65	$ 65
☐	Two months (37 CFR 1.17(a)(2))	$490	$245	$
☐	Three months (37 CFR 1.17(a)(3))	$1110	$555	$
☐	Four months (37 CFR 1.17(a)(4))	$1730	$865	$
☐	Five months (37 CFR 1.17(a)(5))	$2350	$1175	$

☑ Applicant claims small entity status. See 37 CFR 1.27.

☐ A check in the amount of the fee is enclosed.

☐ Payment by credit card. Form PTO-2038 is attached.

☐ The Director has already been authorized to charge fees in this application to a Deposit Account.

☐ The Director is hereby authorized to charge any fees which may be required, or credit any overpayment, to Deposit Account Number _____.

WARNING: Information on this form may become public. Credit card information should not be included on this form. Provide credit card information and authorization on PTO-2038.

I am the

☐ applicant/inventor.

☐ assignee of record of the entire interest. See 37 CFR 3.71.
Statement under 37 CFR 3.73(b) is enclosed (Form PTO/SB/96).

☑ attorney or agent of record. Registration Number 34014

☐ attorney or agent under 37 CFR 1.34.
Registration number if acting under 37 CFR 1.34 _____

/James Albert Ward #34,041/	02-06-2009
Signature	Date
James Albert Ward	858-278-0828
Typed or printed name	Telephone Number

NOTE: Signatures of all the inventors or assignees of record of the entire interest or their representative(s) are required. Submit multiple forms if more than one signature is required, see below.

☑ Total of 1 forms are submitted.

This collection of information is required by 37 CFR 1.136(a). The information is required to obtain or retain a benefit by the public which is to file (and by the USPTO to process) an application. Confidentiality is governed by 35 U.S.C. 122 and 37 CFR 1.11 and 1.14. This collection is estimated to take 6 minutes to complete, including gathering, preparing, and submitting the completed application form to the USPTO. Time will vary depending upon the individual case. Any comments on the amount of time you require to complete this form and/or suggestions for reducing this burden, should be sent to the Chief Information Officer, U.S. Patent and Trademark Office, U.S. Department of Commerce, P.O. Box 1450, Alexandria, VA 22313-1450. DO NOT SEND FEES OR COMPLETED FORMS TO THIS ADDRESS. **SEND TO: Commissioner for Patents, P.O. Box 1450, Alexandria, VA 22313-1450.**

If you need assistance in completing the form, call 1-800-PTO-9199 and select option 2.

Electronic Patent Application Fee Transmittal

Application Number:	11772187
Filing Date:	30-Jun-2007
Title of Invention:	SYSTEM AND METHOD FOR PERFORMING HIGH-SPEED COMMUNICATIONS OVER FIBER OPTICAL NETWORKS
First Named Inventor/Applicant Name:	Alexander I. Soto
Filer:	James Albert Ward
Attorney Docket Number:	UBI-002B

Filed as Small Entity

Utility under 35 USC 111(a) Filing Fees

Description	Fee Code	Quantity	Amount	Sub-Total in USD($)
Basic Filing:				
Pages:				
Claims:				
Miscellaneous-Filing:				
Petition:				
Patent-Appeals-and-Interference:				
Post-Allowance-and-Post-Issuance:				
Extension-of-Time:				
Extension - 1 month with $0 paid	2251	1	65	65

Description	Fee Code	Quantity	Amount	Sub-Total in USD($)
Miscellaneous:				
			Total in USD ($)	**65**

Electronic Acknowledgement Receipt

EFS ID:	4753829
Application Number:	11772187
International Application Number:	
Confirmation Number:	9145
Title of Invention:	SYSTEM AND METHOD FOR PERFORMING HIGH-SPEED COMMUNICATIONS OVER FIBER OPTICAL NETWORKS
First Named Inventor/Applicant Name:	Alexander I. Soto
Customer Number:	50625
Filer:	James Albert Ward
Filer Authorized By:	
Attorney Docket Number:	UBI-002B
Receipt Date:	06-FEB-2009
Filing Date:	30-JUN-2007
Time Stamp:	23:35:25
Application Type:	Utility under 35 USC 111(a)

Payment information:

Submitted with Payment	yes
Payment Type	Credit Card
Payment was successfully received in RAM	$65
RAM confirmation Number	4974
Deposit Account	
Authorized User	

File Listing:

Document Number	Document Description	File Name	File Size(Bytes)/ Message Digest	Multi Part /.zip	Pages (if appl.)

1	Amendment/Req. Reconsideration-After Non-Final Reject	Amerndment_and_Response_UBI-002B_06Feb09.pdf	118028 86c83f5b31a30d86769010f818f9edeb7cfc01af	no	7
Warnings:					
Information:					
2	Extension of Time	Petition_for_One-Month_Extension_UBI-002B_06Feb09.pdf	56189 89b7cc2c80e9e3a35908d9b6bf7abdad967b5393	no	1
Warnings:					
Information:					
3	Fee Worksheet (PTO-06)	fee-info.pdf	30555 02c9d0e09dd7a81656d8f646f0ccc984f6c8e7b9	no	2
Warnings:					
Information:					
			Total Files Size (in bytes):	204772	

This Acknowledgement Receipt evidences receipt on the noted date by the USPTO of the indicated documents, characterized by the applicant, and including page counts, where applicable. It serves as evidence of receipt similar to a Post Card, as described in MPEP 503.

<u>New Applications Under 35 U.S.C. 111</u>
If a new application is being filed and the application includes the necessary components for a filing date (see 37 CFR 1.53(b)-(d) and MPEP 506), a Filing Receipt (37 CFR 1.54) will be issued in due course and the date shown on this Acknowledgement Receipt will establish the filing date of the application.

<u>National Stage of an International Application under 35 U.S.C. 371</u>
If a timely submission to enter the national stage of an international application is compliant with the conditions of 35 U.S.C. 371 and other applicable requirements a Form PCT/DO/EO/903 indicating acceptance of the application as a national stage submission under 35 U.S.C. 371 will be issued in addition to the Filing Receipt, in due course.

<u>New International Application Filed with the USPTO as a Receiving Office</u>
If a new international application is being filed and the international application includes the necessary components for an international filing date (see PCT Article 11 and MPEP 1810), a Notification of the International Application Number and of the International Filing Date (Form PCT/RO/105) will be issued in due course, subject to prescriptions concerning national security, and the date shown on this Acknowledgement Receipt will establish the international filing date of the application.

PTO/SB/06 (07-06)
Approved for use through 1/31/2007. OMB 0651-0032
U.S. Patent and Trademark Office; U.S. DEPARTMENT OF COMMERCE
Under the Paperwork Reduction Act of 1995, no persons are required to respond to a collection of information unless it displays a valid OMB control number.

PATENT APPLICATION FEE DETERMINATION RECORD

Substitute for Form PTO-875

Application or Docket Number	Filing Date	☐ To be Mailed
11/772,187	06/30/2007	

APPLICATION AS FILED – PART I

FOR	(Column 1) NUMBER FILED	(Column 2) NUMBER EXTRA	SMALL ENTITY ☒ RATE ($)	FEE ($)	OR	OTHER THAN SMALL ENTITY RATE ($)	FEE ($)
☐ BASIC FEE (37 CFR 1.16(a), (b), or (c))	N/A	N/A	N/A			N/A	
☐ SEARCH FEE (37 CFR 1.16(k), (i), or (m))	N/A	N/A	N/A			N/A	
☐ EXAMINATION FEE (37 CFR 1.16(o), (p), or (q))	N/A	N/A	N/A			N/A	
TOTAL CLAIMS (37 CFR 1.16(i))	minus 20 =	*	X $ =		OR	X $ =	
INDEPENDENT CLAIMS (37 CFR 1.16(h))	minus 3 =	*	X $ =			X $ =	
☐ APPLICATION SIZE FEE (37 CFR 1.16(s))	If the specification and drawings exceed 100 sheets of paper, the application size fee due is $250 ($125 for small entity) for each additional 50 sheets or fraction thereof. See 35 U.S.C. 41(a)(1)(G) and 37 CFR 1.16(s).						
☐ MULTIPLE DEPENDENT CLAIM PRESENT (37 CFR 1.16(j))							
* If the difference in column 1 is less than zero, enter "0" in column 2.			TOTAL			TOTAL	

APPLICATION AS AMENDED – PART II

AMENDMENT 02/06/2009

	(Column 1) CLAIMS REMAINING AFTER AMENDMENT		(Column 2) HIGHEST NUMBER PREVIOUSLY PAID FOR	(Column 3) PRESENT EXTRA	SMALL ENTITY RATE ($)	ADDITIONAL FEE ($)	OR	OTHER THAN SMALL ENTITY RATE ($)	ADDITIONAL FEE ($)
Total (37 CFR 1.16(i))	* 17	Minus	** 20	= 0	X $26 =	0	OR	X $ =	
Independent (37 CFR 1.16(h))	* 2	Minus	***3	= 0	X $110 =	0	OR	X $ =	
☐ Application Size Fee (37 CFR 1.16(s))									
☐ FIRST PRESENTATION OF MULTIPLE DEPENDENT CLAIM (37 CFR 1.16(j))							OR		
					TOTAL ADD'L FEE	0	OR	TOTAL ADD'L FEE	

AMENDMENT

	(Column 1) CLAIMS REMAINING AFTER AMENDMENT		(Column 2) HIGHEST NUMBER PREVIOUSLY PAID FOR	(Column 3) PRESENT EXTRA	RATE ($)	ADDITIONAL FEE ($)	OR	RATE ($)	ADDITIONAL FEE ($)
Total (37 CFR 1.16(i))	*	Minus	**	=	X $ =		OR	X $ =	
Independent (37 CFR 1.16(h))	*	Minus	***	=	X $ =		OR	X $ =	
☐ Application Size Fee (37 CFR 1.16(s))									
☐ FIRST PRESENTATION OF MULTIPLE DEPENDENT CLAIM (37 CFR 1.16(j))							OR		
					TOTAL ADD'L FEE		OR	TOTAL ADD'L FEE	

* If the entry in column 1 is less than the entry in column 2, write "0" in column 3.
** If the "Highest Number Previously Paid For" IN THIS SPACE is less than 20, enter "20".
*** If the "Highest Number Previously Paid For" IN THIS SPACE is less than 3, enter "3".
The "Highest Number Previously Paid For" (Total or Independent) is the highest number found in the appropriate box in column 1.

Legal Instrument Examiner:
/RAMONA D. WILSON/

This collection of information is required by 37 CFR 1.16. The information is required to obtain or retain a benefit by the public which is to file (and by the USPTO to process) an application. Confidentiality is governed by 35 U.S.C. 122 and 37 CFR 1.14. This collection is estimated to take 12 minutes to complete, including gathering, preparing, and submitting the completed application form to the USPTO. Time will vary depending upon the individual case. Any comments on the amount of time you require to complete this form and/or suggestions for reducing this burden, should be sent to the Chief Information Officer, U.S. Patent and Trademark Office, U.S. Department of Commerce, P.O. Box 1450, Alexandria, VA 22313-1450. DO NOT SEND FEES OR COMPLETED FORMS TO THIS ADDRESS. **SEND TO: Commissioner for Patents, P.O. Box 1450, Alexandria, VA 22313-1450.**
If you need assistance in completing the form, call 1-800-PTO-9199 and select option 2.

UNITED STATES PATENT AND TRADEMARK OFFICE

UNITED STATES DEPARTMENT OF COMMERCE
United States Patent and Trademark Office
Address: COMMISSIONER FOR PATENTS
P.O. Box 1450
Alexandria, Virginia 22313-1450
www.uspto.gov

APPLICATION NO.	FILING DATE	FIRST NAMED INVENTOR	ATTORNEY DOCKET NO.	CONFIRMATION NO.
11/772,187	06/30/2007	Alexander I. Soto	UBI-002B	9145

50625 7590 10/06/2008
JAMES ALBERT WARD
6924 CAMINO PACHECO
SAN DIEGO, CA 92111

EXAMINER
PHAN, HANH

ART UNIT	PAPER NUMBER
2613	

MAIL DATE	DELIVERY MODE
10/06/2008	PAPER

Please find below and/or attached an Office communication concerning this application or proceeding.

The time period for reply, if any, is set in the attached communication.

Office Action Summary	Application No.	Applicant(s)	
	11/772,187	SOTO ET AL.	
	Examiner	Art Unit	
	Hanh Phan	2613	

-- The MAILING DATE of this communication appears on the cover sheet with the correspondence address --

Period for Reply

A SHORTENED STATUTORY PERIOD FOR REPLY IS SET TO EXPIRE 3 MONTH(S) OR THIRTY (30) DAYS, WHICHEVER IS LONGER, FROM THE MAILING DATE OF THIS COMMUNICATION.

- Extensions of time may be available under the provisions of 37 CFR 1.136(a). In no event, however, may a reply be timely filed after SIX (6) MONTHS from the mailing date of this communication.
- If NO period for reply is specified above, the maximum statutory period will apply and will expire SIX (6) MONTHS from the mailing date of this communication.
- Failure to reply within the set or extended period for reply will, by statute, cause the application to become ABANDONED (35 U.S.C. § 133). Any reply received by the Office later than three months after the mailing date of this communication, even if timely filed, may reduce any earned patent term adjustment. See 37 CFR 1.704(b).

Status

1)☒ Responsive to communication(s) filed on 30 June 2007.

2a)☐ This action is **FINAL**. 2b)☒ This action is non-final.

3)☐ Since this application is in condition for allowance except for formal matters, prosecution as to the merits is closed in accordance with the practice under *Ex parte Quayle*, 1935 C.D. 11, 453 O.G. 213.

Disposition of Claims

4)☒ Claim(s) 1 is/are pending in the application.

4a) Of the above claim(s) _____ is/are withdrawn from consideration.

5)☐ Claim(s) _____ is/are allowed.

6)☒ Claim(s) 1 is/are rejected.

7)☐ Claim(s) _____ is/are objected to.

8)☐ Claim(s) _____ are subject to restriction and/or election requirement.

Application Papers

9)☐ The specification is objected to by the Examiner.

10)☒ The drawing(s) filed on 12 September 2007 is/are: a)☒ accepted or b)☐ objected to by the Examiner.

Applicant may not request that any objection to the drawing(s) be held in abeyance. See 37 CFR 1.85(a).

Replacement drawing sheet(s) including the correction is required if the drawing(s) is objected to. See 37 CFR 1.121(d).

11)☐ The oath or declaration is objected to by the Examiner. Note the attached Office Action or form PTO-152.

Priority under 35 U.S.C. § 119

12)☐ Acknowledgment is made of a claim for foreign priority under 35 U.S.C. § 119(a)-(d) or (f).

a)☐ All b)☐ Some * c)☐ None of:

1.☐ Certified copies of the priority documents have been received.

2.☐ Certified copies of the priority documents have been received in Application No. _____.

3.☐ Copies of the certified copies of the priority documents have been received in this National Stage application from the International Bureau (PCT Rule 17.2(a)).

* See the attached detailed Office action for a list of the certified copies not received.

Attachment(s)

1) ☒ Notice of References Cited (PTO-892)

2) ☐ Notice of Draftsperson's Patent Drawing Review (PTO-948)

3) ☒ Information Disclosure Statement(s) (PTO/SB/08) Paper No(s)/Mail Date _____.

4) ☐ Interview Summary (PTO-413) Paper No(s)/Mail Date. _____ .

5) ☐ Notice of Informal Patent Application

6) ☐ Other: _____.

DETAILED ACTION

Double Patenting

1. The nonstatutory double patenting rejection is based on a judicially created doctrine grounded in public policy (a policy reflected in the statute) so as to prevent the unjustified or improper timewise extension of the "right to exclude" granted by a patent and to prevent possible harassment by multiple assignees. A nonstatutory obviousness-type double patenting rejection is appropriate where the conflicting claims are not identical, but at least one examined application claim is not patentably distinct from the reference claim(s) because the examined application claim is either anticipated by, or would have been obvious over, the reference claim(s). See, e.g., *In re Berg*, 140 F.3d 1428, 46 USPQ2d 1226 (Fed. Cir. 1998); *In re Goodman*, 11 F.3d 1046, 29 USPQ2d 2010 (Fed. Cir. 1993); *In re Longi*, 759 F.2d 887, 225 USPQ 645 (Fed. Cir. 1985); *In re Van Ornum*, 686 F.2d 937, 214 USPQ 761 (CCPA 1982); *In re Vogel*, 422 F.2d 438, 164 USPQ 619 (CCPA 1970); and *In re Thorington*, 418 F.2d 528, 163 USPQ 644 (CCPA 1969).

A timely filed terminal disclaimer in compliance with 37 CFR 1.321(c) or 1.321(d) may be used to overcome an actual or provisional rejection based on a nonstatutory double patenting ground provided the conflicting application or patent either is shown to be commonly owned with this application, or claims an invention made as a result of activities undertaken within the scope of a joint research agreement.

Effective January 1, 1994, a registered attorney or agent of record may sign a terminal disclaimer. A terminal disclaimer signed by the assignee must fully comply with 37 CFR 3.73(b).

2. Claim 1 is rejected on the ground of nonstatutory obviousness-type double patenting as being unpatentable over claims 1-21 of U.S. Patent No. 7,242,868 (Soto et al) in view of Savory et al (US Patent no. 7,266,310).

Instant application No. 11/772,187 (Claim 1)	US Patent No. 7,242,868 (Soto et al) (Claim 1)
A method for equalizing upstream and downstream channels in a passive	A method for equalizing upstream and downstream channels in a passive optical

optical network having an Optical Line Terminator (OLT) and an Optical Networking Unit and/or Optical Networking Terminal (ONU/ONT), the method comprising the steps of: sending a first training sequence in the downstream channel from the OLT;	network having an Optical Line Terminator (OLT) and an Optical Networking Unit and/or Optical Networking Terminal (ONU/ONT), the method comprising the steps of: sending the downstream channel from the OLT (Claim 1);
receiving the first training sequence at the ONU/ONT;	receiving the downstream at the ONU/ONT (Claim 1);
equalizing the downstream channel responsive the received first training sequence;	equalizing the downstream channel (Claim 1);
receiving network parameters from the equalized downstream channel at the ONU/ONT;	receiving network parameters from the equalized downstream channel at the ONU/ONT (Claim 1);
sending a second training sequence in the upstream channel from the ONU/ONT;	sending the upstream channel from the ONU/ONT (Claim 1);

receiving the second training sequence at the OLT; and	receiving the upstream channel at the OLT (Claim 1); and
equalizing the upstream channel responsive to the received second training sequence.	equalizing the upstream channel (Claim 1).

Soto et al (US Patent No. 7,242,868) differs from claim 1 in that he fails to specifically teach sending a training sequence and receiving the training sequence and equalizing the data channel responsive the received training sequence. However, Savory et al in US Patent No. 7,266,310 teaches sending a training sequence and receiving the training sequence and equalizing the data channel responsive the received training sequence (i.e., Figures 1 and 2, col. 4, lines 30-67 and col. 5, line 1-67). Based on this teaching, it would have been obvious to one having skill in the art at the time the invention was made to incorporate the sending a training sequence and receiving the training sequence and equalizing the data channel responsive the received training sequence as taught by Savory et al in the system of Soto et al. one ordinary skill in the art would have been motivated to do this since allowing compensating the distortion of the signal.

Claim Rejections - 35 USC § 103

3. The following is a quotation of 35 U.S.C. 103(a) which forms the basis for all obviousness rejections set forth in this Office action:

> (a) A patent may not be obtained though the invention is not identically disclosed or described as set forth in section 102 of this title, if the differences between the subject matter sought to be patented and the prior art are such that the subject matter as a whole would have been obvious at the time the invention was made to a person having ordinary skill in the art to which said subject matter pertains. Patentability shall not be negatived by the manner in which the invention was made.

4. Claim 1 is rejected under 35 U.S.C. 103(a) as being unpatentable over Gummalla et al (Pub. No.: US 2003/0007211) in view of Savory et al (US Patent no. 7,266,310).

Regarding claim 1, referring to Figures 2, 3 and 5, Gummalla et al teaches a method for equalizing upstream and downstream channels in a passive optical network having an Optical Line Terminator (OLT) and an Optical Networking Unit and/or Optical Networking Terminal (ONU/ONT), the method comprising the steps of:

sending the downstream channel from the OLT (i.e., Figs. 2, 3 and 5);

receiving the downstream channel at the ONU/ONT (Figs. 2, 3 and 5);

equalizing (i.e., adaptive equalizer 530, Fig. 5) the downstream channel;

receiving network parameters from the equalized downstream channel at the ONU/ONT (i.e., Figs. 2, 3 and 5);

sending the upstream channel from the ONU/ONT (i.e., Figs. 2, 3 and 5);

receiving the upstream channel at the OLT (i.e., Figs, 2, 3 and 5); and

equalizing the upstream channel (i.e., Fig. 5)(i.e., pages 3, paragraphs [0047]-[0058]).

Gummalla et al differs from claim 1 in that he fails to specifically teach sending a training sequence and receiving the training sequence and equalizing the data channel responsive the received training sequence. However, Savory et al in US Patent No. 7,266,310 teaches sending a training sequence and receiving the training sequence and equalizing the data channel responsive the received training sequence (i.e., Figures 1 and 2, col. 4, lines 30-67 and col. 5, line 1-67). Based on this teaching, it would have been obvious to one having skill in the art at the time the invention was made to incorporate the sending a training sequence and receiving the training sequence and equalizing the data channel responsive the received training sequence as taught by Savory et al in the system of Gummalla et al. one ordinary skill in the art would have been motivated to do this since allowing compensating the distortion of the signal.

Conclusion

5. The prior art made of record and not relied upon is considered pertinent to applicant's disclosure.

Agazzi (Pub. No.: US 2001/0035997) discloses optical transmission system.

Azadet (US Patent No. 7,155,134) discloses optical transmission system.

6. Any inquiry concerning this communication or earlier communications from the examiner should be directed to Hanh Phan whose telephone number is (571)272-3035.

If attempts to reach the examiner by telephone are unsuccessful, the examiner's supervisor, Jason Chan, can be reached on (571)272-3022. The fax phone number for the organization where this application or proceeding is assigned is (571)273-8300.

Any inquiry of a general nature or relating to the status of this application or proceeding should be directed to the receptionist whose telephone number is (703)305-4700.

/Hanh Phan/

Primary Examiner, Art Unit 2613

Notice of References Cited	Application/Control No. 11/772,187	Applicant(s)/Patent Under Reexamination SOTO ET AL.	
	Examiner Hanh Phan	Art Unit 2613	Page 1 of 1

U.S. PATENT DOCUMENTS

*		Document Number Country Code-Number-Kind Code	Date MM-YYYY	Name	Classification
*	A	US-7,242,868	07-2007	Soto et al.	398/72
*	B	US-7,155,134	12-2006	Azadet, Kameran	398/202
*	C	US-2001/0035997	11-2001	Agazzi, Oscar E.	359/173
*	D	US-2003/0007211	01-2003	Gummalla et al.	359/136
*	E	US-7,266,310	09-2007	Savory et al.	398/205
	F	US-			
	G	US-			
	H	US-			
	I	US-			
	J	US-			
	K	US-			
	L	US-			
	M	US-			

FOREIGN PATENT DOCUMENTS

*		Document Number Country Code-Number-Kind Code	Date MM-YYYY	Country	Name	Classification
	N					
	O					
	P					
	Q					
	R					
	S					
	T					

NON-PATENT DOCUMENTS

*		Include as applicable: Author, Title Date, Publisher, Edition or Volume, Pertinent Pages)
	U	
	V	
	W	
	X	

*A copy of this reference is not being furnished with this Office action. (See MPEP § 707.05(a).)
Dates in MM-YYYY format are publication dates. Classifications may be US or foreign.

Search Notes	Application/Control No.	Applicant(s)/Patent Under Reexamination
	11772187	SOTO ET AL.
	Examiner	**Art Unit**
	Hanh Phan	2613

SEARCHED

Class	Subclass	Date	Examiner
398	72, 66, 67, 68, 70, 71, 79, 187, 183, 190, 192, 194, 202, 208, 209, 210, 154, 155, 158, 159, 147, 164	09/30/3008	HP
375	233, 321	09/30/3008	HP

SEARCH NOTES

Search Notes	Date	Examiner
EAST SEARCH SEE ATTACHED PRINTOUT IN THE FILE	09/30/2008	HP
IEEE SEARCH	09/30/2008	HP

INTERFERENCE SEARCH

Class	Subclass	Date	Examiner

Index of Claims	Application/Control No.	Applicant(s)/Patent Under Reexamination
	11772187	SOTO ET AL.
	Examiner	**Art Unit**
	Hanh Phan	2613

✓	Rejected	-	Cancelled	N	Non-Elected	A	Appeal
=	Allowed	÷	Restricted	I	Interference	O	Objected

☐ Claims renumbered in the same order as presented by applicant ☐ CPA ☐ T.D. ☐ R.1.47

CLAIM		DATE								
Final	Original	09/30/2008								
	1	✓								

UNITED STATES PATENT AND TRADEMARK OFFICE

UNITED STATES DEPARTMENT OF COMMERCE
United States Patent and Trademark Office
Address: COMMISSIONER FOR PATENTS
P.O. Box 1450
Alexandria, Virginia 22313-1450
www.uspto.gov

BIB DATA SHEET

CONFIRMATION NO. 9145

SERIAL NUMBER	FILING or 371(c) DATE	CLASS	GROUP ART UNIT	ATTORNEY DOCKET NO.
11/772,187	06/30/2007 **RULE**	398	2613	UBI-002B

APPLICANTS

Alexander I. Soto, San Diego, CA;
Walter G. Soto, San Clemente, CA;

**** CONTINUING DATA ***************************

This application is a CON of 10/865,547 06/10/2004 PAT 7,242,868
which claims benefit of 60/477,845 06/10/2003
and claims benefit of 60/480,488 06/21/2003

**** FOREIGN APPLICATIONS ***************************

**** IF REQUIRED, FOREIGN FILING LICENSE GRANTED **** ** SMALL ENTITY **
07/19/2007

		STATE OR COUNTRY	SHEETS DRAWINGS	TOTAL CLAIMS	INDEPENDENT CLAIMS
Foreign Priority claimed ☐ Yes ☑ No 35 USC 119(a-d) conditions met ☐ Yes ☑ No Verified and Acknowledged /HANH PHAN/ Examiner's Signature	☐ Met after Allowance Initials	CA	7	1	1

ADDRESS

JAMES ALBERT WARD
6924 CAMINO PACHECO
SAN DIEGO, CA 92111
UNITED STATES

TITLE

SYSTEM AND METHOD FOR PERFORMING HIGH-SPEED COMMUNICATIONS OVER FIBER OPTICAL NETWORKS

FILING FEE RECEIVED		
425	FEES: Authority has been given in Paper No._____ to charge/credit DEPOSIT ACCOUNT No._____ for following:	☐ All Fees ☐ 1.16 Fees (Filing) ☐ 1.17 Fees (Processing Ext. of time) ☐ 1.18 Fees (Issue) ☐ Other _____ ☐ Credit

EAST Search History

Ref #	Hits	Search Query	DBs	Default Operator	Plurals	Time Stamp
L1	613	398/183.ccls.	US-PGPUB; USPAT; USOCR; FPRS; EPO; JPO; DERWENT; IBM_TDB	OR	ON	2008/10/01 03:18
L2	1622	398/59-72.ccls.	US-PGPUB; USPAT; USOCR; FPRS; EPO; JPO; DERWENT; IBM_TDB	OR	ON	2008/10/01 03:18
L3	156	2 and OLT and ONU	US-PGPUB; USPAT; USOCR; FPRS; EPO; JPO; DERWENT; IBM_TDB	OR	ON	2008/10/01 03:18
L4	6	3 and equalizer	US-PGPUB; USPAT; USOCR; FPRS; EPO; JPO; DERWENT; IBM_TDB	OR	ON	2008/10/01 03:18
L5	9	3 and equaliz $4	US-PGPUB; USPAT; USOCR; FPRS; EPO; JPO; DERWENT; IBM_TDB	OR	ON	2008/10/01 03:21
L6	16	OLT and ONU and equalizer	US-PGPUB; USPAT; USOCR; FPRS; EPO; JPO; DERWENT; IBM_TDB	OR	ON	2008/10/01 03:23
L7	1472	OLT and ONU	US-PGPUB; USPAT; USOCR; FPRS; EPO; JPO; DERWENT; IBM_TDB	OR	ON	2008/10/01 03:24

L8	43	OLT and ONU and equaliz$4	US-PGPUB; USPAT; USOCR; FPRS; EPO; JPO; DERWENT; IBM_TDB	OR	ON	2008/10/01 03:25
L9	6	398/66-72.ccls. and OLT and ONU and equaliz$4	US-PGPUB; USPAT; USOCR; FPRS; EPO; JPO; DERWENT; IBM_TDB	OR	ON	2008/10/01 03:28
L10	19	"398"/$.ccls. and OLT and ONU and equaliz$4	US-PGPUB; USPAT; USOCR; FPRS; EPO; JPO; DERWENT; IBM_TDB	OR	ON	2008/10/01 03:28
L11	10	"359"/$7 and OLT and ONU and equaliz$4	US-PGPUB; USPAT; USOCR; FPRS; EPO; JPO; DERWENT; IBM_TDB	OR	ON	2008/10/01 03:30
L12	99	"359"/$7 and OLT and ONU	US-PGPUB; USPAT; USOCR; FPRS; EPO; JPO; DERWENT; IBM_TDB	OR	ON	2008/10/01 03:31
L13	2	"359"/$7 and OLT and ONU and training	US-PGPUB; USPAT; USOCR; FPRS; EPO; JPO; DERWENT; IBM_TDB	OR	ON	2008/10/01 03:31
L14	11	"398"/$.ccls. and OLT and ONU and training	US-PGPUB; USPAT; USOCR; FPRS; EPO; JPO; DERWENT; IBM_TDB	OR	ON	2008/10/01 03:31
S1	60	"398"/$.ccls. and squeezer	US-PGPUB; USPAT; USOCR; FPRS; EPO; JPO; DERWENT; IBM_TDB	OR	ON	2008/09/02 10:13

S2	1	"398"/66-72.ccls. and squeezer	US-PGPUB; USPAT; USOCR; FPRS; EPO; JPO; DERWENT; IBM_TDB	OR	ON	2008/09/02 10:13
S3	2	"398"/141.ccls. and squeezer	US-PGPUB; USPAT; USOCR; FPRS; EPO; JPO; DERWENT; IBM_TDB	OR	ON	2008/09/02 10:13
S4	0	"398"/188.ccls. and squeezer	US-PGPUB; USPAT; USOCR; FPRS; EPO; JPO; DERWENT; IBM_TDB	OR	ON	2008/09/02 10:14
S5	3	"398"/202.ccls. and squeezer	US-PGPUB; USPAT; USOCR; FPRS; EPO; JPO; DERWENT; IBM_TDB	OR	ON	2008/09/02 10:14
S6	0	"455"/$.ccls. and squeezer	US-PGPUB; USPAT; USOCR; FPRS; EPO; JPO; DERWENT; IBM_TDB	OR	ON	2008/09/02 10:14
S7	0	"455"/605.ccls. and squeezer	US-PGPUB; USPAT; USOCR; FPRS; EPO; JPO; DERWENT; IBM_TDB	OR	ON	2008/09/02 10:14
S8	0	"455"/609.ccls. and squeezer	US-PGPUB; USPAT; USOCR; FPRS; EPO; JPO; DERWENT; IBM_TDB	OR	ON	2008/09/02 10:14
S9	0	"455"/612.ccls. and squeezer	US-PGPUB; USPAT; USOCR; FPRS; EPO; JPO; DERWENT; IBM_TDB	OR	ON	2008/09/02 10:14

S10	0	"455"/611.ccls. and squeezer	US-PGPUB; USPAT; USOCR; FPRS; EPO; JPO; DERWENT; IBM_TDB	OR	ON	2008/09/02 10:14
S11	0	"398"/82.ccls. and squeezer	US-PGPUB; USPAT; USOCR; FPRS; EPO; JPO; DERWENT; IBM_TDB	OR	ON	2008/09/02 10:14

10/1/08 3:36:26 AM
C:\Documents and Settings\HPhan3\My Documents\EAST\Workspaces\11335581.wsp

Under the Paperwork Reduction Act of 1995, no persons are required to respond to a collection of information unless it contains a valid OMB control number.

INFORMATION DISCLOSURE STATEMENT BY APPLICANT (Not for submission under 37 CFR 1.99)		
	Application Number	11772187
	Filing Date	2007-06-30
	First Named Inventor	Alexander I. Soto
	Art Unit	2613
	Examiner Name	~~Unknown~~ Hanh Phan
	Attorney Docket Number	UBI-002B

U.S.PATENTS						Remove
Examiner Initial*	Cite No	Patent Number	Kind Code[1]	Issue Date	Name of Patentee or Applicant of cited Document	Pages,Columns,Lines where Relevant Passages or Relevant Figures Appear
/HP/	1	5150247		1992-09-22	Sharpe et al.	
/HP/	2	6950477		2005-09-27	Meehan et al.	
/HP/	3	6067319		2000-05-23	Copeland, Gregory Clark	
/HP/	4	5363408		1994-11-08	Paik et al.	
/HP/	5	5880863		1999-03-09	Rideout et al.	
/HP/	6	6490727		2002-12-03	Strolle et al.	
If you wish to add additional U.S. Patent citation information please click the Add button.						Add

U.S.PATENT APPLICATION PUBLICATIONS						Remove
Examiner Initial*	Cite No	Publication Number	Kind Code[1]	Publication Date	Name of Patentee or Applicant of cited Document	Pages,Columns,Lines where Relevant Passages or Relevant Figures Appear

INFORMATION DISCLOSURE STATEMENT BY APPLICANT (Not for submission under 37 CFR 1.99)		
	Application Number	11772187
	Filing Date	2007-06-30
	First Named Inventor	Alexander I. Soto
	Art Unit	2613
	Examiner Name	~~Unknown~~ Hanh Phan
	Attorney Docket Number	UBI-002B

	1					

If you wish to add additional U.S. Published Application citation information please click the Add button. Add

FOREIGN PATENT DOCUMENTS Remove

Examiner Initial*	Cite No	Foreign Document Number[3]	Country Code[2] ¡	Kind Code[4]	Publication Date	Name of Patentee or Applicant of cited Document	Pages,Columns,Lines where Relevant Passages or Relevant Figures Appear	T[5]
	1							☐

If you wish to add additional Foreign Patent Document citation information please click the Add button Add

NON-PATENT LITERATURE DOCUMENTS Remove

Examiner Initials*	Cite No	Include name of the author (in CAPITAL LETTERS), title of the article (when appropriate), title of the item (book, magazine, journal, serial, symposium, catalog, etc), date, pages(s), volume-issue number(s), publisher, city and/or country where published.	T[5]
/HP/	1	Delavaux, et al., "QAM-PON and Super PON for Access Distribution Networks", 2000	☐

If you wish to add additional non-patent literature document citation information please click the Add button Add

EXAMINER SIGNATURE

Examiner Signature	/Hanh Phan/	Date Considered	10/01/2008

*EXAMINER: Initial if reference considered, whether or not citation is in conformance with MPEP 609. Draw line through a citation if not in conformance and not considered. Include copy of this form with next communication to applicant.

[1] See Kind Codes of USPTO Patent Documents at www.USPTO.GOV or MPEP 901.04. [2] Enter office that issued the document, by the two-letter code (WIPO Standard ST.3). [3] For Japanese patent documents, the indication of the year of the reign of the Emperor must precede the serial number of the patent document. [4] Kind of document by the appropriate symbols as indicated on the document under WIPO Standard ST.16 if possible. [5] Applicant is to place a check mark here if English language translation is attached.

UNITED STATES PATENT AND TRADEMARK OFFICE

UNITED STATES DEPARTMENT OF COMMERCE
United States Patent and Trademark Office
Address: COMMISSIONER FOR PATENTS
P.O. Box 1450
Alexandria, Virginia 22313-1450
www.uspto.gov

APPLICATION NUMBER	FILING OR 371(C) DATE	FIRST NAMED APPLICANT	ATTY. DOCKET NO./TITLE
11/772,187	06/30/2007	Alexander I. Soto	UBI-002B

CONFIRMATION NO. 9145

PUBLICATION NOTICE

50625
JAMES ALBERT WARD
LAW OFFICES
1 WATERWAY
IRVINE, CA 92614

OC000000030894140

Date Mailed: 07/10/2008

Title:SYSTEM AND METHOD FOR PERFORMING HIGH-SPEED COMMUNICATIONS OVER FIBER OPTICAL NETWORKS

Publication No.US-2008-0166124-A1
Publication Date:07/10/2008

NOTICE OF PUBLICATION OF APPLICATION

The above-identified application will be electronically published as a patent application publication pursuant to 37 CFR 1.211, et seq. The patent application publication number and publication date are set forth above.

The publication may be accessed through the USPTO's publically available Searchable Databases via the Internet at www.uspto.gov. The direct link to access the publication is currently http://www.uspto.gov/patft/.

The publication process established by the Office does not provide for mailing a copy of the publication to applicant. A copy of the publication may be obtained from the Office upon payment of the appropriate fee set forth in 37 CFR 1.19(a)(1). Orders for copies of patent application publications are handled by the USPTO's Office of Public Records. The Office of Public Records can be reached by telephone at (703) 308-9726 or (800) 972-6382, by facsimile at (703) 305-8759, by mail addressed to the United States Patent and Trademark Office, Office of Public Records, Alexandria, VA 22313-1450 or via the Internet.

In addition, information on the status of the application, including the mailing date of Office actions and the dates of receipt of correspondence filed in the Office, may also be accessed via the Internet through the Patent Electronic Business Center at www.uspto.gov using the public side of the Patent Application Information and Retrieval (PAIR) system. The direct link to access this status information is currently http://pair.uspto.gov/. Prior to publication, such status information is confidential and may only be obtained by applicant using the private side of PAIR.

Further assistance in electronically accessing the publication, or about PAIR, is available by calling the Patent Electronic Business Center at 1-866-217-9197.

Office of Data Managment, Application Assistance Unit (571) 272-4000, or (571) 272-4200, or 1-888-786-0101

UNITED STATES PATENT AND TRADEMARK OFFICE

UNITED STATES DEPARTMENT OF COMMERCE
United States Patent and Trademark Office
Address: COMMISSIONER FOR PATENTS
P.O. Box 1450
Alexandria, Virginia 22313-1450
www.uspto.gov

APPLICATION NUMBER	FILING or 371(c) DATE	GRP ART UNIT	FIL FEE REC'D	ATTY.DOCKET.NO	TOT CLAIMS	IND CLAIMS
11/772,187	06/30/2007	2613	425	UBI-002B	1	1

CONFIRMATION NO. 9145

UPDATED FILING RECEIPT

OC000000029149101

50625
JAMES ALBERT WARD
LAW OFFICES
1 WATERWAY
IRVINE, CA 92614

Date Mailed: 04/02/2008

Receipt is acknowledged of this non-provisional patent application. The application will be taken up for examination in due course. Applicant will be notified as to the results of the examination. Any correspondence concerning the application must include the following identification information: the U.S. APPLICATION NUMBER, FILING DATE, NAME OF APPLICANT, and TITLE OF INVENTION. Fees transmitted by check or draft are subject to collection. Please verify the accuracy of the data presented on this receipt. **If an error is noted on this Filing Receipt, please write to the Office of Initial Patent Examination's Filing Receipt Corrections. Please provide a copy of this Filing Receipt with the changes noted thereon. If you received a "Notice to File Missing Parts" for this application, please submit any corrections to this Filing Receipt with your reply to the Notice. When the USPTO processes the reply to the Notice, the USPTO will generate another Filing Receipt incorporating the requested corrections**

Applicant(s)

Alexander I. Soto, San Diego, CA;
Walter G. Soto, San Clemente, CA;

Power of Attorney: The patent practitioners associated with Customer Number 000050625

Domestic Priority data as claimed by applicant

This application is a CON of 10/865,547 06/10/2004 PAT 7,242,868
which claims benefit of 60/477,845 06/10/2003
and claims benefit of 60/480,488 06/21/2003

Foreign Applications

If Required, Foreign Filing License Granted: 07/19/2007

The country code and number of your priority application, to be used for filing abroad under the Paris Convention, is **US 11/772,187**

Projected Publication Date: 07/10/2008

Non-Publication Request: No

Early Publication Request: No
**** SMALL ENTITY ****

Title

SYSTEM AND METHOD FOR PERFORMING HIGH-SPEED COMMUNICATIONS OVER FIBER OPTICAL NETWORKS

Preliminary Class

PROTECTING YOUR INVENTION OUTSIDE THE UNITED STATES

Since the rights granted by a U.S. patent extend only throughout the territory of the United States and have no effect in a foreign country, an inventor who wishes patent protection in another country must apply for a patent in a specific country or in regional patent offices. Applicants may wish to consider the filing of an international application under the Patent Cooperation Treaty (PCT). An international (PCT) application generally has the same effect as a regular national patent application in each PCT-member country. The PCT process **simplifies** the filing of patent applications on the same invention in member countries, but **does not result** in a grant of "an international patent" and does not eliminate the need of applicants to file additional documents and fees in countries where patent protection is desired.

Almost every country has its own patent law, and a person desiring a patent in a particular country must make an application for patent in that country in accordance with its particular laws. Since the laws of many countries differ in various respects from the patent law of the United States, applicants are advised to seek guidance from specific foreign countries to ensure that patent rights are not lost prematurely.

Applicants also are advised that in the case of inventions made in the United States, the Director of the USPTO must issue a license before applicants can apply for a patent in a foreign country. The filing of a U.S. patent application serves as a request for a foreign filing license. The application's filing receipt contains further information and guidance as to the status of applicant's license for foreign filing.

Applicants may wish to consult the USPTO booklet, "General Information Concerning Patents" (specifically, the section entitled "Treaties and Foreign Patents") for more information on timeframes and deadlines for filing foreign patent applications. The guide is available either by contacting the USPTO Contact Center at 800-786-9199, or it can be viewed on the USPTO website at http://www.uspto.gov/web/offices/pac/doc/general/index.html.

For information on preventing theft of your intellectual property (patents, trademarks and copyrights), you may wish to consult the U.S. Government website, http://www.stopfakes.gov. Part of a Department of Commerce initiative, this website includes self-help "toolkits" giving innovators guidance on how to protect intellectual property in specific countries such as China, Korea and Mexico. For questions regarding patent enforcement issues, applicants may call the U.S. Government hotline at 1-866-999-HALT (1-866-999-4158).

LICENSE FOR FOREIGN FILING UNDER

Title 35, United States Code, Section 184

Title 37, Code of Federal Regulations, 5.11 & 5.15

GRANTED

The applicant has been granted a license under 35 U.S.C. 184, if the phrase "IF REQUIRED, FOREIGN FILING LICENSE GRANTED" followed by a date appears on this form. Such licenses are issued in all applications where the conditions for issuance of a license have been met, regardless of whether or not a license may be required as

set forth in 37 CFR 5.15. The scope and limitations of this license are set forth in 37 CFR 5.15(a) unless an earlier license has been issued under 37 CFR 5.15(b). The license is subject to revocation upon written notification. The date indicated is the effective date of the license, unless an earlier license of similar scope has been granted under 37 CFR 5.13 or 5.14.

This license is to be retained by the licensee and may be used at any time on or after the effective date thereof unless it is revoked. This license is automatically transferred to any related applications(s) filed under 37 CFR 1.53(d). This license is not retroactive.

The grant of a license does not in any way lessen the responsibility of a licensee for the security of the subject matter as imposed by any Government contract or the provisions of existing laws relating to espionage and the national security or the export of technical data. Licensees should apprise themselves of current regulations especially with respect to certain countries, of other agencies, particularly the Office of Defense Trade Controls, Department of State (with respect to Arms, Munitions and Implements of War (22 CFR 121-128)); the Bureau of Industry and Security, Department of Commerce (15 CFR parts 730-774); the Office of Foreign AssetsControl, Department of Treasury (31 CFR Parts 500+) and the Department of Energy.

NOT GRANTED

No license under 35 U.S.C. 184 has been granted at this time, if the phrase "IF REQUIRED, FOREIGN FILING LICENSE GRANTED" DOES NOT appear on this form. Applicant may still petition for a license under 37 CFR 5.12, if a license is desired before the expiration of 6 months from the filing date of the application. If 6 months has lapsed from the filing date of this application and the licensee has not received any indication of a secrecy order under 35 U.S.C. 181, the licensee may foreign file the application pursuant to 37 CFR 5.15(b).

Under the Paperwork Reduction Act of 1995, no persons are required to respond to a collection of information unless it contains a valid OMB control number.

INFORMATION DISCLOSURE STATEMENT BY APPLICANT (Not for submission under 37 CFR 1.99)		
	Application Number	11772187
	Filing Date	2007-06-30
	First Named Inventor	Alexander I. Soto
	Art Unit	2613
	Examiner Name	Unknown
	Attorney Docket Number	UBI-002B

U.S.PATENTS						Remove
Examiner Initial*	Cite No	Patent Number	Kind Code[1]	Issue Date	Name of Patentee or Applicant of cited Document	Pages,Columns,Lines where Relevant Passages or Relevant Figures Appear
	1	5150247		1992-09-22	Sharpe et al.	
	2	6950477		2005-09-27	Meehan et al.	
	3	6067319		2000-05-23	Copeland, Gregory Clark	
	4	5363408		1994-11-08	Paik et al.	
	5	5880863		1999-03-09	Rideout et al.	
	6	6490727		2002-12-03	Strolle et al.	
If you wish to add additional U.S. Patent citation information please click the Add button.						Add
U.S.PATENT APPLICATION PUBLICATIONS						Remove
Examiner Initial*	Cite No	Publication Number	Kind Code[1]	Publication Date	Name of Patentee or Applicant of cited Document	Pages,Columns,Lines where Relevant Passages or Relevant Figures Appear

INFORMATION DISCLOSURE STATEMENT BY APPLICANT (Not for submission under 37 CFR 1.99)		
	Application Number	11772187
	Filing Date	2007-06-30
	First Named Inventor	Alexander I. Soto
	Art Unit	2613
	Examiner Name	Unknown
	Attorney Docket Number	UBI-002B

	1					

If you wish to add additional U.S. Published Application citation information please click the Add button. Add

FOREIGN PATENT DOCUMENTS Remove

Examiner Initial*	Cite No	Foreign Document Number[3]	Country Code[2] ¡	Kind Code[4]	Publication Date	Name of Patentee or Applicant of cited Document	Pages,Columns,Lines where Relevant Passages or Relevant Figures Appear	T[5]
	1							☐

If you wish to add additional Foreign Patent Document citation information please click the Add button Add

NON-PATENT LITERATURE DOCUMENTS Remove

Examiner Initials*	Cite No	Include name of the author (in CAPITAL LETTERS), title of the article (when appropriate), title of the item (book, magazine, journal, serial, symposium, catalog, etc), date, pages(s), volume-issue number(s), publisher, city and/or country where published.	T[5]
	1	Delavaux, et al., "QAM-PON and Super PON for Access Distribution Networks", 2000	☐

If you wish to add additional non-patent literature document citation information please click the Add button Add

EXAMINER SIGNATURE

Examiner Signature		Date Considered	

*EXAMINER: Initial if reference considered, whether or not citation is in conformance with MPEP 609. Draw line through a citation if not in conformance and not considered. Include copy of this form with next communication to applicant.

[1] See Kind Codes of USPTO Patent Documents at www.USPTO.GOV or MPEP 901.04. [2] Enter office that issued the document, by the two-letter code (WIPO Standard ST.3). [3] For Japanese patent documents, the indication of the year of the reign of the Emperor must precede the serial number of the patent document. [4] Kind of document by the appropriate symbols as indicated on the document under WIPO Standard ST.16 if possible. [5] Applicant is to place a check mark here if English language translation is attached.

INFORMATION DISCLOSURE STATEMENT BY APPLICANT (Not for submission under 37 CFR 1.99)	Application Number	11772187
	Filing Date	2007-06-30
	First Named Inventor	Alexander I. Soto
	Art Unit	2613
	Examiner Name	Unknown
	Attorney Docket Number	UBI-002B

CERTIFICATION STATEMENT

Please see 37 CFR 1.97 and 1.98 to make the appropriate selection(s):

☐ That each item of information contained in the information disclosure statement was first cited in any communication from a foreign patent office in a counterpart foreign application not more than three months prior to the filing of the information disclosure statement. See 37 CFR 1.97(e)(1).

OR

☐ That no item of information contained in the information disclosure statement was cited in a communication from a foreign patent office in a counterpart foreign application, and, to the knowledge of the person signing the certification after making reasonable inquiry, no item of information contained in the information disclosure statement was known to any individual designated in 37 CFR 1.56(c) more than three months prior to the filing of the information disclosure statement. See 37 CFR 1.97(e)(2).

☐ See attached certification statement.

☐ Fee set forth in 37 CFR 1.17 (p) has been submitted herewith.

☒ None

SIGNATURE

A signature of the applicant or representative is required in accordance with CFR 1.33, 10.18. Please see CFR 1.4(d) for the form of the signature.

Signature	/James Albert Ward #34041/	Date (YYYY-MM-DD)	2007-10-16
Name/Print	James Albert Ward	Registration Number	34,041

This collection of information is required by 37 CFR 1.97 and 1.98. The information is required to obtain or retain a benefit by the public which is to file (and by the USPTO to process) an application. Confidentiality is governed by 35 U.S.C. 122 and 37 CFR 1.14. This collection is estimated to take 1 hour to complete, including gathering, preparing and submitting the completed application form to the USPTO. Time will vary depending upon the individual case. Any comments on the amount of time you require to complete this form and/or suggestions for reducing this burden, should be sent to the Chief Information Officer, U.S. Patent and Trademark Office, U.S. Department of Commerce, P.O. Box 1450, Alexandria, VA 22313-1450. DO NOT SEND FEES OR COMPLETED FORMS TO THIS ADDRESS. **SEND TO: Commissioner for Patents, P.O. Box 1450, Alexandria, VA 22313-1450.**

Privacy Act Statement

The Privacy Act of 1974 (P.L. 93-579) requires that you be given certain information in connection with your submission of the attached form related to a patent application or patent. Accordingly, pursuant to the requirements of the Act, please be advised that: (1) the general authority for the collection of this information is 35 U.S.C. 2(b)(2); (2) furnishing of the information solicited is voluntary; and (3) the principal purpose for which the information is used by the U.S. Patent and Trademark Office is to process and/or examine your submission related to a patent application or patent. If you do not furnish the requested information, the U.S. Patent and Trademark Office may not be able to process and/or examine your submission, which may result in termination of proceedings or abandonment of the application or expiration of the patent.

The information provided by you in this form will be subject to the following routine uses:

1. The information on this form will be treated confidentially to the extent allowed under the Freedom of Information Act (5 U.S.C. 552) and the Privacy Act (5 U.S.C. 552a). Records from this system of records may be disclosed to the Department of Justice to determine whether the Freedom of Information Act requires disclosure of these record s.

2. A record from this system of records may be disclosed, as a routine use, in the course of presenting evidence to a court, magistrate, or administrative tribunal, including disclosures to opposing counsel in the course of settlement negotiations.

3. A record in this system of records may be disclosed, as a routine use, to a Member of Congress submitting a request involving an individual, to whom the record pertains, when the individual has requested assistance from the Member with respect to the subject matter of the record.

4. A record in this system of records may be disclosed, as a routine use, to a contractor of the Agency having need for the information in order to perform a contract. Recipients of information shall be required to comply with the requirements of the Privacy Act of 1974, as amended, pursuant to 5 U.S.C. 552a(m).

5. A record related to an International Application filed under the Patent Cooperation Treaty in this system of records may be disclosed, as a routine use, to the International Bureau of the World Intellectual Property Organization, pursuant to the Patent Cooperation Treaty.

6. A record in this system of records may be disclosed, as a routine use, to another federal agency for purposes of National Security review (35 U.S.C. 181) and for review pursuant to the Atomic Energy Act (42 U.S.C. 218(c)).

7. A record from this system of records may be disclosed, as a routine use, to the Administrator, General Services, or his/her designee, during an inspection of records conducted by GSA as part of that agency's responsibility to recommend improvements in records management practices and programs, under authority of 44 U.S.C. 2904 and 2906. Such disclosure shall be made in accordance with the GSA regulations governing inspection of records for this purpose, and any other relevant (i.e., GSA or Commerce) directive. Such disclosure shall not be used to make determinations about individuals.

8. A record from this system of records may be disclosed, as a routine use, to the public after either publication of the application pursuant to 35 U.S.C. 122(b) or issuance of a patent pursuant to 35 U.S.C. 151. Further, a record may be disclosed, subject to the limitations of 37 CFR 1.14, as a routine use, to the public if the record was filed in an application which became abandoned or in which the proceedings were terminated and which application is referenced by either a published application, an application open to public inspections or an issued patent.

9. A record from this system of records may be disclosed, as a routine use, to a Federal, State, or local law enforcement agency, if the USPTO becomes aware of a violation or potential violation of law or regulation.

Electronic Acknowledgement Receipt

EFS ID:	2329231
Application Number:	11772187
International Application Number:	
Confirmation Number:	9145
Title of Invention:	SYSTEM AND METHOD FOR PERFORMING HIGH-SPEED COMMUNICATIONS OVER FIBER OPTICAL NETWORKS
First Named Inventor/Applicant Name:	Alexander I. Soto
Customer Number:	50625
Filer:	James Albert Ward
Filer Authorized By:	
Attorney Docket Number:	UBI-002B
Receipt Date:	16-OCT-2007
Filing Date:	30-JUN-2007
Time Stamp:	22:50:18
Application Type:	Utility under 35 USC 111(a)

Payment information:

Submitted with Payment	no

File Listing:

Document Number	Document Description	File Name	File Size(Bytes) /Message Digest	Multi Part /.zip	Pages (if appl.)
1	NPL Documents	NPL_QAM-PON_Super_PON_UBI-002B.pdf	222340 96c7007b9b4ec2e7f6e35f8176967dbb5843f456	no	3

Warnings:

Information:					
2	Information Disclosure Statement (IDS) Filed	IDS_UBI-002B_16Oct07.pdf	851500 103b2c540e5380c18e77957eb15eca3d53411ce5	no	4
Warnings:					
Information:					
			Total Files Size (in bytes):	1073840	

This Acknowledgement Receipt evidences receipt on the noted date by the USPTO of the indicated documents, characterized by the applicant, and including page counts, where applicable. It serves as evidence of receipt similar to a Post Card, as described in MPEP 503.

New Applications Under 35 U.S.C. 111
If a new application is being filed and the application includes the necessary components for a filing date (see 37 CFR 1.53(b)-(d) and MPEP 506), a Filing Receipt (37 CFR 1.54) will be issued in due course and the date shown on this Acknowledgement Receipt will establish the filing date of the application.

National Stage of an International Application under 35 U.S.C. 371
If a timely submission to enter the national stage of an international application is compliant with the conditions of 35 U.S.C. 371 and other applicable requirements a Form PCT/DO/EO/903 indicating acceptance of the application as a national stage submission under 35 U.S.C. 371 will be issued in addition to the Filing Receipt, in due course.

New International Application Filed with the USPTO as a Receiving Office
If a new international application is being filed and the international application includes the necessary components for an international filing date (see PCT Article 11 and MPEP 1810), a Notification of the International Application Number and of the International Filing Date (Form PCT/RO/105) will be issued in due course, subject to prescriptions concerning national security, and the date shown on this Acknowledgement Receipt will establish the international filing date of the application.

PATENTS
Docket No. UBI-002B

IN THE UNITED STATES PATENT AND TRADEMARK OFFICE

In re Application of:
Alexander I. Soto et al.

Patent Application No.: **11/772,187**

Filed on: **June 30, 2007**

For: **System And Method For Performing High-Speed Communications Over Fiber Optical Networks**

Group Art Unit: **Unknown**

Examiner: **Unknown**

Commissioner for Patents
Mail Stop Amendment
PO Box 1450
Alexandria, VA 22313-4150

SUBMISSION OF FORMAL DRAWINGS PER 37 C.F.R. §1.84

Responsive to the Notice to File Corrected Application Papers (Filing Date Granted) mailed on July 19, 2007, please enter the following Formal Drawings in the above-entitled Patent Application. No substantive amendment is made to the drawings.

Respectfully submitted,

/James Albert Ward #34041/

James A. Ward
Reg. No. 34,041
Customer No. 50,625
1 Waterway
Irvine, Ca 92614
949-748-6760
jim@jward.org

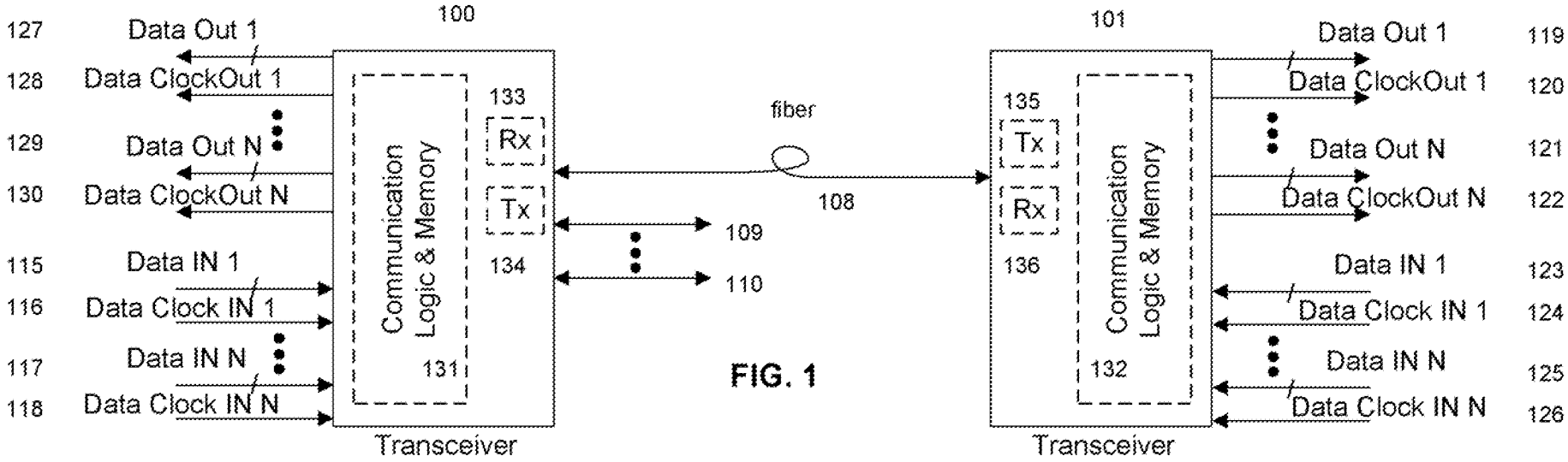
100
101
127 Data Out 1
128 Data ClockOut 1
129 Data Out N
130 Data ClockOut N
115 Data IN 1
116 Data Clock IN 1
117 Data IN N
118 Data Clock IN N
Communication Logic & Memory
131
133
Rx
Tx
134
fiber
108
109
110
135
Tx
Rx
136
Communication Logic & Memory
132
Data Out 1 119
Data ClockOut 1 120
Data Out N 121
Data ClockOut N 122
Data IN 1 123
Data Clock IN 1 124
Data IN N 125
Data Clock IN N 126
Transceiver
Transceiver

FIG. 1

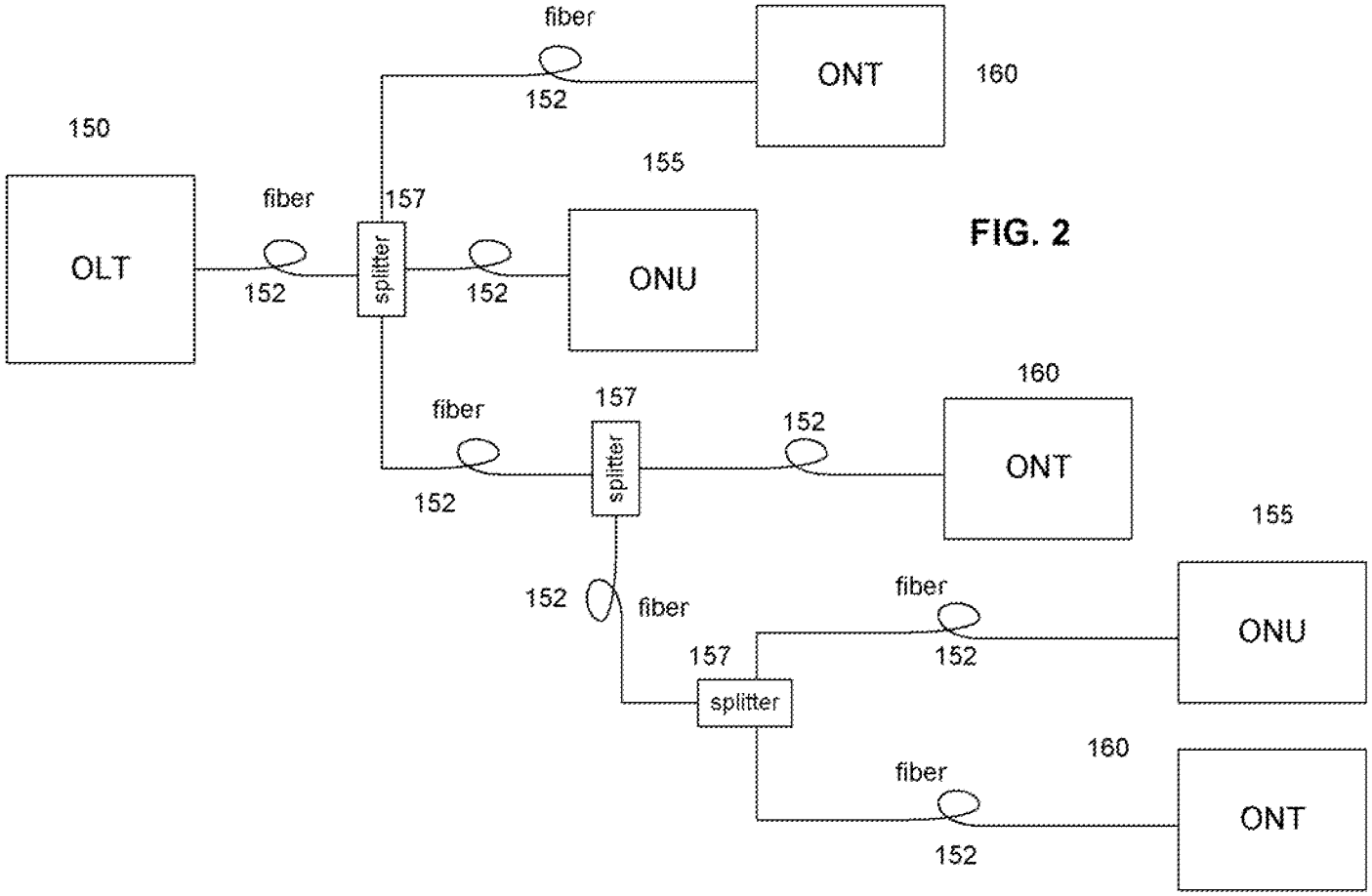
150
OLT
fiber
152
157
splitter
fiber
152
ONT
160
155
ONU
fiber
152
157
splitter
152
160
ONT
152
fiber
157
splitter
fiber
152
155
ONU
fiber
152
160
ONT

FIG. 2

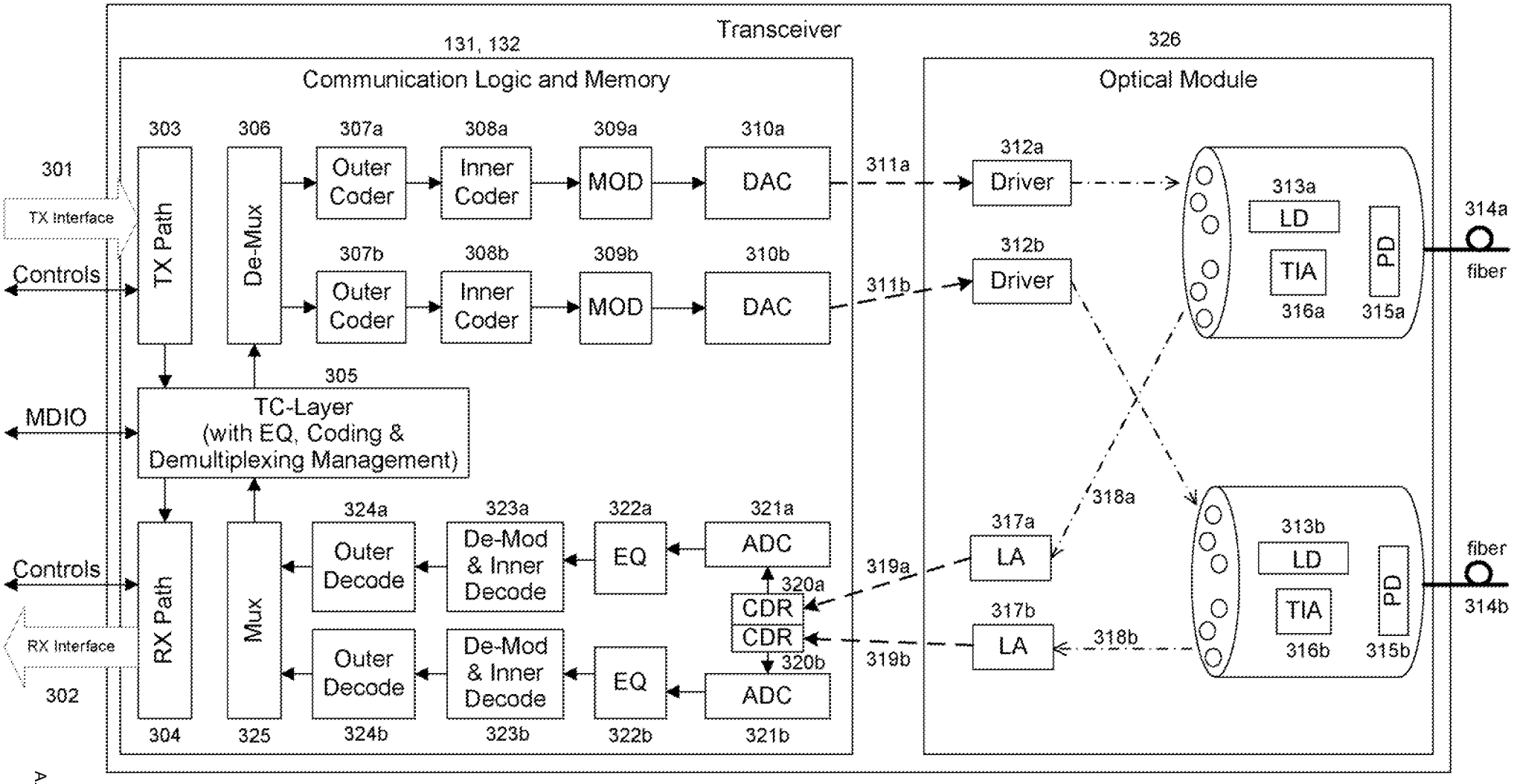
Transceiver
131, 132
Communication Logic and Memory
326
Optical Module
301
TX Interface
Controls
MDIO
Controls
RX Interface
302
303
TX Path
306
De-Mux
307a
Outer Coder
308a
Inner Coder
309a
MOD
310a
DAC
307b
Outer Coder
308b
Inner Coder
309b
MOD
310b
DAC
305
TC-Layer
(with EQ, Coding &
Demultiplexing Management)
304
RX Path
325
Mux
324a
Outer Decode
323a
De-Mod
& Inner
Decode
322a
EQ
321a
ADC
320a
CDR
CDR
320b
ADC
321b
EQ
322b
De-Mod
& Inner
Decode
323b
Outer Decode
324b
311a
311b
312a
Driver
312b
Driver
313a
LD
TIA
316a
PD
315a
314a
fiber
313b
LD
TIA
316b
PD
315b
fiber
314b
318a
317a
LA
319a
317b
LA
318b
319b

FIG. 3

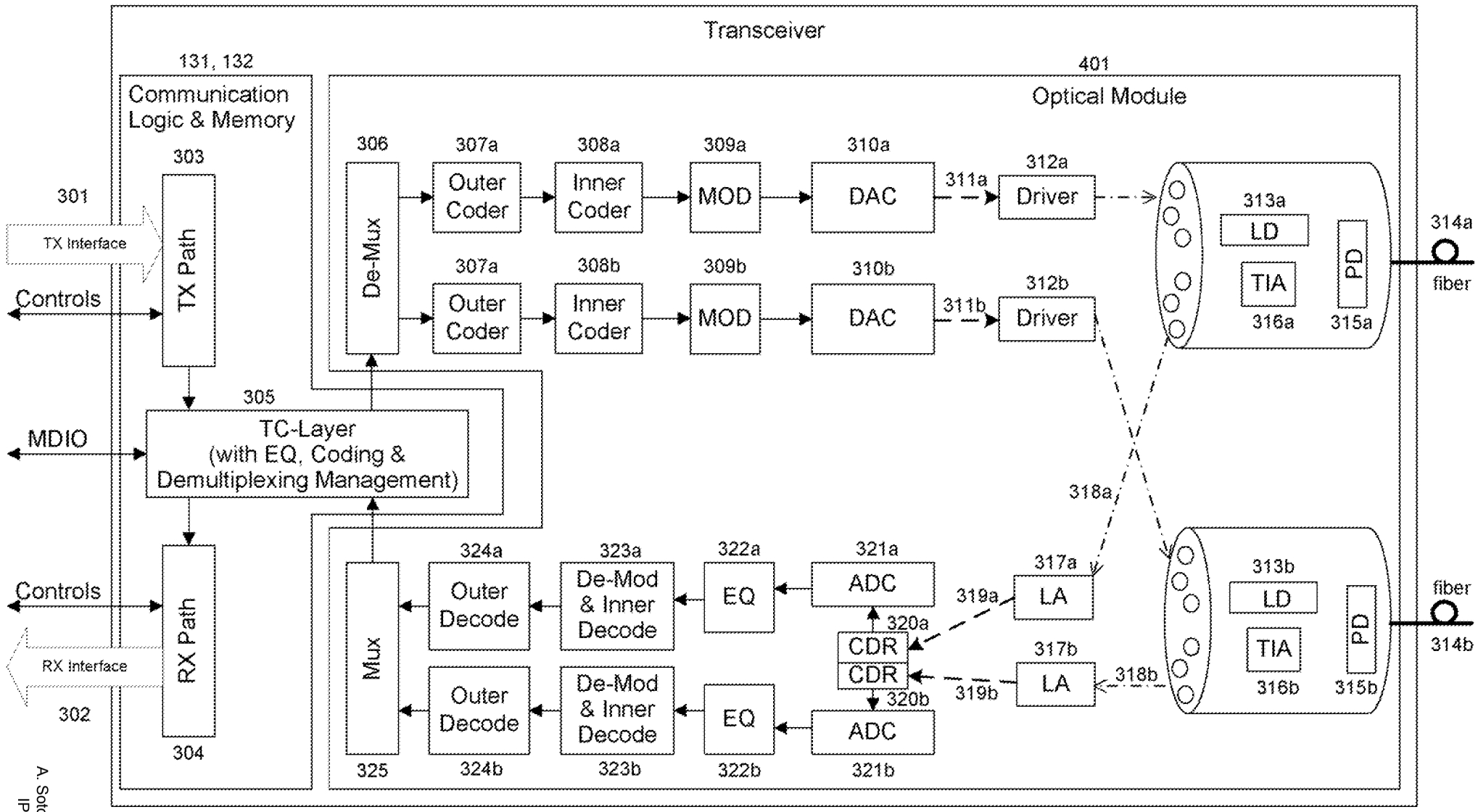
Transceiver
131, 132
Communication Logic & Memory
401
Optical Module
301
TX Interface
Controls
303
TX Path
MDIO
305
TC-Layer (with EQ, Coding & Demultiplexing Management)
Controls
RX Interface
302
RX Path
304
306
De-Mux
307a
Outer Coder
308a
Inner Coder
309a
MOD
310a
DAC
311a
312a
Driver
307a
Outer Coder
308b
Inner Coder
309b
MOD
310b
DAC
311b
312b
Driver
313a
LD
TIA
316a
PD
315a
314a
fiber
318a
313b
LD
TIA
316b
PD
315b
fiber
314b
324a
Outer Decode
323a
De-Mod & Inner Decode
322a
EQ
321a
ADC
319a
317a
LA
320a
CDR
CDR
320b
319b
317b
LA
318b
Mux
325
Outer Decode
324b
De-Mod & Inner Decode
323b
EQ
322b
ADC
321b

FIG. 4

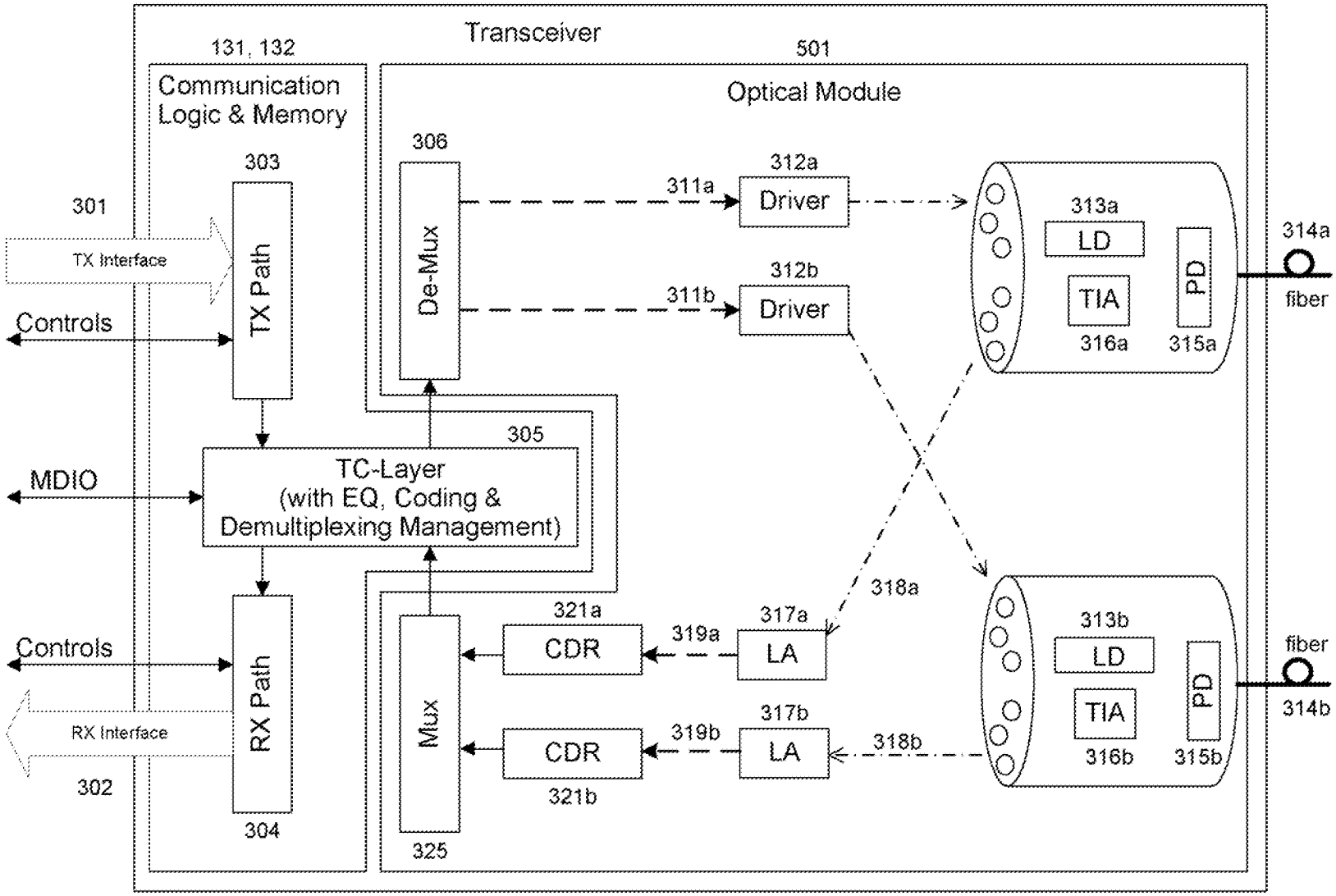
Transceiver
131, 132
Communication Logic & Memory
501
Optical Module
306
De-Mux
303
TX Path
301
TX Interface
Controls
MDIO
305
TC-Layer (with EQ, Coding & Demultiplexing Management)
Controls
RX Path
RX Interface
302
304
Mux
325
311a
311b
312a
Driver
312b
Driver
313a
LD
TIA
PD
316a
315a
314a
fiber
318a
321a
CDR
319a
317a
LA
317b
319b
CDR
LA
318b
321b
313b
LD
TIA
PD
316b
315b
fiber
314b

FIG. 5

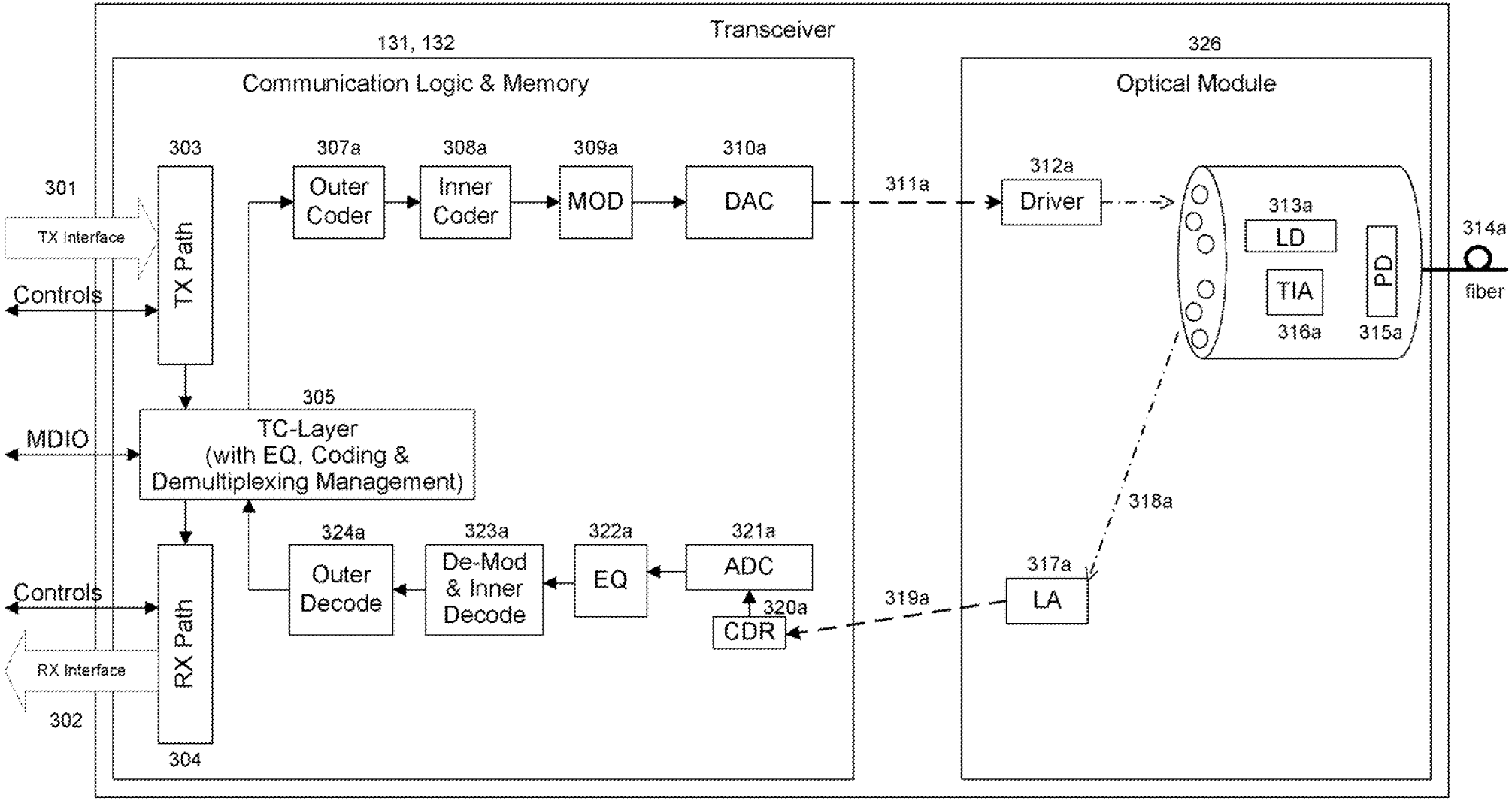
Transceiver
131, 132
Communication Logic & Memory
326
Optical Module
301
TX Interface
Controls
303
TX Path
307a
Outer Coder
308a
Inner Coder
309a
MOD
310a
DAC
311a
312a
Driver
313a
LD
TIA
316a
PD
315a
314a
fiber
MDIO
305
TC-Layer
(with EQ, Coding &
Demultiplexing Management)
318a
Controls
RX Interface
302
RX Path
304
324a
Outer Decode
323a
De-Mod & Inner Decode
322a
EQ
321a
ADC
320a
CDR
319a
317a
LA

FIG. 6

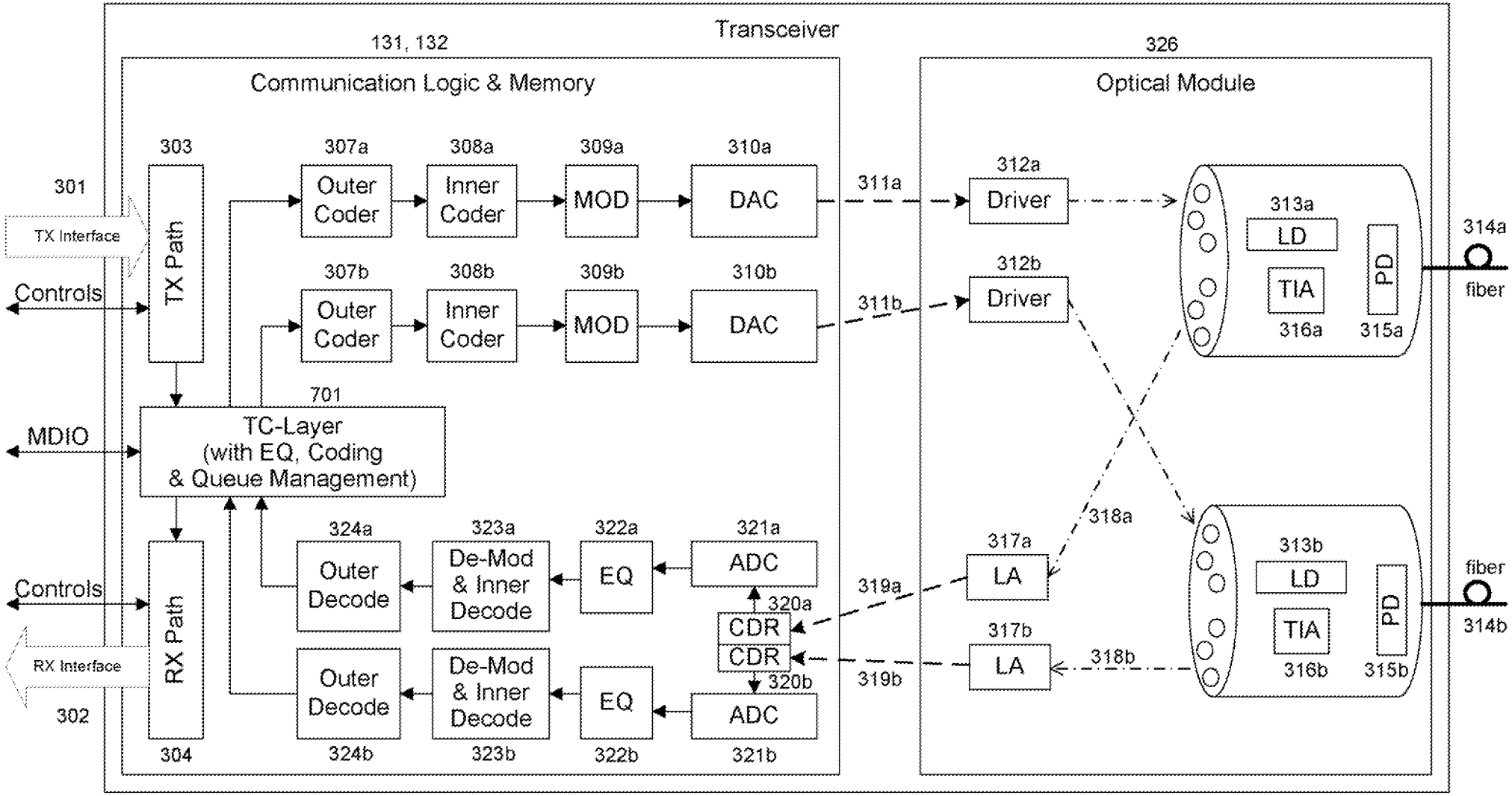
Transceiver
131, 132
Communication Logic & Memory
326
Optical Module
301
TX Interface
Controls
MDIO
Controls
RX Interface
302
303
TX Path
304
RX Path
307a
Outer Coder
308a
Inner Coder
309a
MOD
310a
DAC
307b
Outer Coder
308b
Inner Coder
309b
MOD
310b
DAC
701
TC-Layer (with EQ, Coding & Queue Management)
324a
Outer Decode
323a
De-Mod & Inner Decode
322a
EQ
321a
ADC
320a
CDR
CDR
320b
324b
Outer Decode
323b
De-Mod & Inner Decode
322b
EQ
321b
ADC
311a
311b
319a
319b
312a
Driver
312b
Driver
317a
LA
317b
LA
318a
318b
313a
LD
TIA
316a
PD
315a
313b
LD
TIA
316b
PD
315b
314a
fiber
fiber
314b

FIG. 7

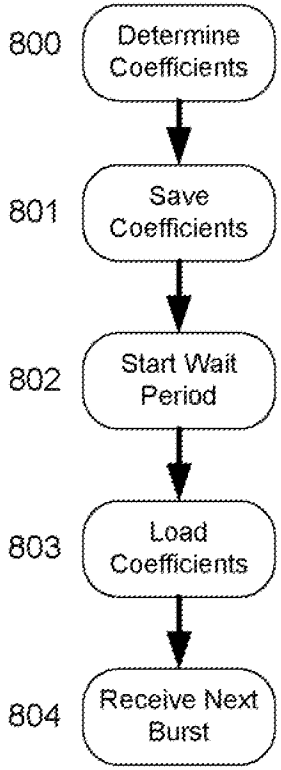
800
Determine Coefficients
801
Save Coefficients
802
Start Wait Period
803
Load Coefficients
804
Receive Next Burst

FIG. 8

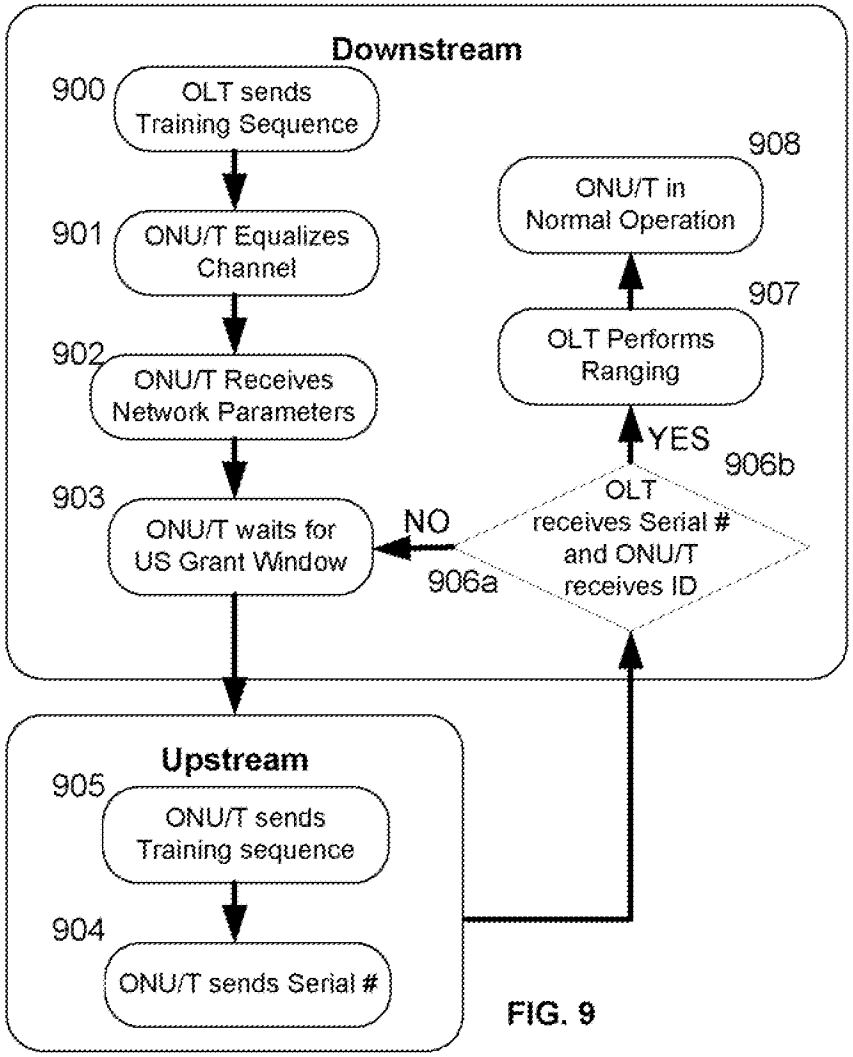
Downstream
900
OLT sends Training Sequence
901
ONU/T Equalizes Channel
902
ONU/T Receives Network Parameters
903
ONU/T waits for US Grant Window
NO
906a
OLT receives Serial # and ONU/T receives ID
YES
906b
907
OLT Performs Ranging
908
ONU/T in Normal Operation
Upstream
905
ONU/T sends Training sequence
904
ONU/T sends Serial #

FIG. 9

Electronic Acknowledgement Receipt

EFS ID:	2189863
Application Number:	11772187
International Application Number:	
Confirmation Number:	9145
Title of Invention:	SYSTEM AND METHOD FOR PERFORMING HIGH-SPEED COMMUNICATIONS OVER FIBER OPTICAL NETWORKS
First Named Inventor/Applicant Name:	Alexander I. Soto
Customer Number:	50625
Filer:	James Albert Ward
Filer Authorized By:	
Attorney Docket Number:	UBI-002B
Receipt Date:	12-SEP-2007
Filing Date:	30-JUN-2007
Time Stamp:	19:01:32
Application Type:	Utility under 35 USC 111(a)

Payment information:

Submitted with Payment	no

File Listing:

Document Number	Document Description	File Name	File Size(Bytes) /Message Digest	Multi Part /.zip	Pages (if appl.)
1	New or Additional Drawings	Formal_Drawings_Transmittal_UBI-002B_12Sep07.pdf	92621 ca73cb516b6c07dbd34abaa47eb0949978561b21	no	1

Warnings:

Information:					
2	Drawings	Formal_Drawings_UBI-002B_12Sep07.pdf	627938 d43d5b9d02974a0337e72d5f6865deda8280b2fd	no	7
Warnings:					
Information:					
			Total Files Size (in bytes):	720559	

This Acknowledgement Receipt evidences receipt on the noted date by the USPTO of the indicated documents, characterized by the applicant, and including page counts, where applicable. It serves as evidence of receipt similar to a Post Card, as described in MPEP 503.

New Applications Under 35 U.S.C. 111
If a new application is being filed and the application includes the necessary components for a filing date (see 37 CFR 1.53(b)-(d) and MPEP 506), a Filing Receipt (37 CFR 1.54) will be issued in due course and the date shown on this Acknowledgement Receipt will establish the filing date of the application.

National Stage of an International Application under 35 U.S.C. 371
If a timely submission to enter the national stage of an international application is compliant with the conditions of 35 U.S.C. 371 and other applicable requirements a Form PCT/DO/EO/903 indicating acceptance of the application as a national stage submission under 35 U.S.C. 371 will be issued in addition to the Filing Receipt, in due course.

New International Application Filed with the USPTO as a Receiving Office
If a new international application is being filed and the international application includes the necessary components for an international filing date (see PCT Article 11 and MPEP 1810), a Notification of the International Application Number and of the International Filing Date (Form PCT/RO/105) will be issued in due course, subject to prescriptions concerning national security, and the date shown on this Acknowledgement Receipt will establish the international filing date of the application.

UNITED STATES PATENT AND TRADEMARK OFFICE

UNITED STATES DEPARTMENT OF COMMERCE
United States Patent and Trademark Office
Address: COMMISSIONER FOR PATENTS
P.O. Box 1450
Alexandria, Virginia 22313-1450
www.uspto.gov

APPLICATION NUMBER	FILING or 371(c) DATE	GRP ART UNIT	FIL FEE REC'D	ATTY.DOCKET.NO
11/772,187	06/30/2007		425	UBI-002B

CONFIRMATION NO. 9145

50625
JAMES ALBERT WARD
1 WATERWAY
IRVINE, CA92614

FILING RECEIPT

Date Mailed: 07/19/2007

Receipt is acknowledged of this non-provisional patent application. The application will be taken up for examination in due course. Applicant will be notified as to the results of the examination. Any correspondence concerning the application must include the following identification information: the U.S. APPLICATION NUMBER, FILING DATE, NAME OF APPLICANT, and TITLE OF INVENTION. Fees transmitted by check or draft are subject to collection. Please verify the accuracy of the data presented on this receipt. **If an error is noted on this Filing Receipt, please write to the Office of Initial Patent Examination's Filing Receipt Corrections. Please provide a copy of this Filing Receipt with the changes noted thereon. If you received a "Notice to File Missing Parts" for this application, please submit any corrections to this Filing Receipt with your reply to the Notice. When the USPTO processes the reply to the Notice, the USPTO will generate another Filing Receipt incorporating the requested corrections**

Applicant(s)

Alexander I. Soto, San Diego, CA;
Walter G. Soto, San Clemente, CA;

Power of Attorney: The patent practitioners associated with Customer Number 000050625

Domestic Priority data as claimed by applicant

This application is a CON of 10/865,547 06/10/2004 PAT 7,242,868
which claims benefit of 60/477,845 06/10/2003
and claims benefit of 60/480,488 06/21/2003

Foreign Applications

If Required, Foreign Filing License Granted: 07/19/2007

The country code and number of your priority application, to be used for filing abroad under the Paris Convention, is
US11/772,187

Projected Publication Date: To Be Determined - pending completion of Corrected Papers

Non-Publication Request: No

Early Publication Request: No

** SMALL ENTITY **

Title

SYSTEM AND METHOD FOR PERFORMING HIGH-SPEED COMMUNICATIONS

Preliminary Class

PROTECTING YOUR INVENTION OUTSIDE THE UNITED STATES

Since the rights granted by a U.S. patent extend only throughout the territory of the United States and have no effect in a foreign country, an inventor who wishes patent protection in another country must apply for a patent in a specific country or in regional patent offices. Applicants may wish to consider the filing of an international application under the Patent Cooperation Treaty (PCT). An international (PCT) application generally has the same effect as a regular national patent application in each PCT-member country. The PCT process **simplifies** the filing of patent applications on the same invention in member countries, but **does not result** in a grant of "an international patent" and does not eliminate the need of applicants to file additional documents and fees in countries where patent protection is desired.

Almost every country has its own patent law, and a person desiring a patent in a particular country must make an application for patent in that country in accordance with its particular laws. Since the laws of many countries differ in various respects from the patent law of the United States, applicants are advised to seek guidance from specific foreign countries to ensure that patent rights are not lost prematurely.

Applicants also are advised that in the case of inventions made in the United States, the Director of the USPTO must issue a license before applicants can apply for a patent in a foreign country. The filing of a U.S. patent application serves as a request for a foreign filing license. The application's filing receipt contains further information and guidance as to the status of applicant's license for foreign filing.

Applicants may wish to consult the USPTO booklet, "General Information Concerning Patents" (specifically, the section entitled "Treaties and Foreign Patents") for more information on timeframes and deadlines for filing foreign patent applications. The guide is available either by contacting the USPTO Contact Center at 800-786-9199, or it can be viewed on the USPTO website at http://www.uspto.gov/web/offices/pac/doc/general/index.html.

For information on preventing theft of your intellectual property (patents, trademarks and copyrights), you may wish to consult the U.S. Government website, http://www.stopfakes.gov. Part of a Department of Commerce initiative, this website includes self-help "toolkits" giving innovators guidance on how to protect intellectual property in specific countries such as China, Korea and Mexico. For questions regarding patent enforcement issues, applicants may call the U.S. Government hotline at 1-866-999-HALT (1-866-999-4158).

LICENSE FOR FOREIGN FILING UNDER

Title 35, United States Code, Section 184

Title 37, Code of Federal Regulations, 5.11 & 5.15

GRANTED

The applicant has been granted a license under 35 U.S.C. 184, if the phrase "IF REQUIRED, FOREIGN FILING LICENSE GRANTED" followed by a date appears on this form. Such licenses are issued in all applications where the conditions for issuance of a license have been met, regardless of whether or not a license may be required as set forth in 37 CFR 5.15. The scope and limitations of this license are set forth in 37 CFR 5.15(a) unless an earlier license has been issued under 37 CFR 5.15(b). The license is subject to revocation upon written notification. The date indicated is the effective date of the license, unless an earlier license of similar scope has been granted under 37 CFR 5.13 or 5.14.

This license is to be retained by the licensee and may be used at any time on or after the effective date thereof unless it is revoked. This license is automatically transferred to any related applications(s) filed under 37 CFR 1.53(d). This license is not retroactive.

The grant of a license does not in any way lessen the responsibility of a licensee for the security of the

subject matter as imposed by any Government contract or the provisions of existing laws relating to espionage and the national security or the export of technical data. Licensees should apprise themselves of current regulations especially with respect to certain countries, of other agencies, particularly the Office of Defense Trade Controls, Department of State (with respect to Arms, Munitions and Implements of War (22 CFR 121-128)); the Bureau of Industry and Security, Department of Commerce (15 CFR parts 730-774); the Office of Foreign AssetsControl, Department of Treasury (31 CFR Parts 500+) and the Department of Energy.

NOT GRANTED

No license under 35 U.S.C. 184 has been granted at this time, if the phrase "IF REQUIRED, FOREIGN FILING LICENSE GRANTED" DOES NOT appear on this form. Applicant may still petition for a license under 37 CFR 5.12, if a license is desired before the expiration of 6 months from the filing date of the application. If 6 months has lapsed from the filing date of this application and the licensee has not received any indication of a secrecy order under 35 U.S.C. 181, the licensee may foreign file the application pursuant to 37 CFR 5.15(b).

UNITED STATES PATENT AND TRADEMARK OFFICE

UNITED STATES DEPARTMENT OF COMMERCE
United States Patent and Trademark Office
Address: COMMISSIONER FOR PATENTS
P.O. Box 1450
Alexandria, Virginia 22313-1450
www.uspto.gov

APPLICATION NUMBER	FILING OR 371 (c) DATE	FIRST NAMED APPLICANT	ATTORNEY DOCKET NUMBER
11/772,187	06/30/2007	Alexander I. Soto	UBI-002B

CONFIRMATION NO. 9145

FORMALITIES LETTER

50625
JAMES ALBERT WARD
1 WATERWAY
IRVINE, CA 92614

Date Mailed: 07/19/2007

NOTICE TO FILE CORRECTED APPLICATION PAPERS

Filing Date Granted

An application number and filing date have been accorded to this application. The application is informal since it does not comply with the regulations for the reason(s) indicated below. Applicant is given TWO MONTHS from the date of this Notice within which to correct the informalities indicated below. Extensions of time may be obtained by filing a petition accompanied by the extension fee under the provisions of 37 CFR 1.136(a).

The required item(s) identified below must be timely submitted to avoid abandonment:

- Replacement drawings in compliance with 37 CFR 1.84 and 37 CFR 1.121(d) are required. The drawings submitted are not acceptable because:
  - The drawings must be reasonably free from erasures and must be free from alterations, overwriting, interlineations, folds, and copy marks. See Figure(s) 3-7.

Applicant is cautioned that correction of the above items may cause the specification and drawings page count to exceed 100 pages. If the specification and drawings exceed 100 pages, applicant will need to submit the required application size fee.

Replies should be mailed to: Mail Stop Missing Parts
Commissioner for Patents
P.O. Box 1450
Alexandria VA 22313-1450

Registered users of EFS-Web may alternatively submit their reply to this notice via EFS-Web.
https://sportal.uspto.gov/authenticate/AuthenticateUserLocalEPF.html

For more information about EFS-Web please call the USPTO Electronic Business Center at **1-866-217-9197** or visit our website at http://www.uspto.gov/ebc.

If you are not using EFS-Web to submit your reply, you must include a copy of this notice.

R.B

Office of Initial Patent Examination (571) 272-4000, or 1-800-PTO-9199

PART 3 - OFFICE COPY

Under the Paperwork Reduction Act of 1995, no persons are required to respond to a collection of information unless it contains a valid OMB control number.

Application Data Sheet 37 CFR 1.76	Attorney Docket Number	UBI-002B
	Application Number	
Title of Invention	SYSTEM AND METHOD FOR PERFORMING HIGH-SPEED COMMUNICATIONS OVER FIBER OPTICAL NETWORKS	

The application data sheet is part of the provisional or nonprovisional application for which it is being submitted. The following form contains the bibliographic data arranged in a format specified by the United States Patent and Trademark Office as outlined in 37 CFR 1.76.
This document may be completed electronically and submitted to the Office in electronic format using the Electronic Filing System (EFS) or the document may be printed and included in a paper filed application.

Secrecy Order 37 CFR 5.2

☐ Portions or all of the application associated with this Application Data Sheet may fall under a Secrecy Order pursuant to 37 CFR 5.2 (Paper filers only. Applications that fall under Secrecy Order may not be filed electronically.)

Applicant Information:

Applicant 1 Remove

Applicant Authority ◉ Inventor ◯ Legal Representative under 35 U.S.C. 117 ◯ Party of Interest under 35 U.S.C. 118

Prefix	Given Name	Middle Name	Family Name	Suffix
	Alexander	I	Soto	

Residence Information (Select One) ◉ US Residency ◯ Non US Residency ◯ Active US Military Service

City	San Diego	State/Province	CA	Country of Residence i	US

Citizenship under 37 CFR 1.41(b) i US

Mailing Address of Applicant:

Address 1	7673 Hazard Center Drive		
Address 2			
City	San Diego	State/Province	CA
Postal Code	92108	Country i	US

Applicant 2 Remove

Applicant Authority ◉ Inventor ◯ Legal Representative under 35 U.S.C. 117 ◯ Party of Interest under 35 U.S.C. 118

Prefix	Given Name	Middle Name	Family Name	Suffix
	Walter	G	Soto	

Residence Information (Select One) ◉ US Residency ◯ Non US Residency ◯ Active US Military Service

City	San Clemente	State/Province	CA	Country of Residence i	US

Citizenship under 37 CFR 1.41(b) i US

Mailing Address of Applicant:

Address 1	2020 Costero Hermoso		
Address 2			
City	San Clemente	State/Province	CA
Postal Code	92673	Country i	US

All Inventors Must Be Listed - Additional Inventor Information blocks may be generated within this form by selecting the **Add** button. Add

Correspondence Information:

Enter either Customer Number or complete the Correspondence Information section below.
For further information see 37 CFR 1.33(a).

☐ **An Address is being provided for the correspondence Information of this application.**

Under the Paperwork Reduction Act of 1995, no persons are required to respond to a collection of information unless it contains a valid OMB control number.

Application Data Sheet 37 CFR 1.76	Attorney Docket Number	UBI-002B
	Application Number	
Title of Invention	SYSTEM AND METHOD FOR PERFORMING HIGH-SPEED COMMUNICATIONS OVER FIBER OPTICAL NETWORKS	

Customer Number	50625		
Email Address	jim@jward.org	Add Email	Remove Email

Application Information:

Title of the Invention	SYSTEM AND METHOD FOR PERFORMING HIGH-SPEED COMMUNICATIONS OVER FIBER OPTICAL NETWORKS		
Attorney Docket Number	UBI-002B	**Small Entity Status Claimed**	☒
Application Type	Nonprovisional		
Subject Matter	Utility		
Suggested Class (if any)		**Sub Class (if any)**	
Suggested Technology Center (if any)	2613		
Total Number of Drawing Sheets (if any)	7	**Suggested Figure for Publication (if any)**	

Publication Information:

☐ Request Early Publication (Fee required at time of Request 37 CFR 1.219)

☐ **Request Not to Publish.** I hereby request that the attached application not be published under 35 U.S. C. 122(b) and certify that the invention disclosed in the attached application has not been and will not be the subject of an application filed in another country, or under a multilateral agreement, that requires publication at eighteen months after filing.

Representative Information:

Representative information should be provided for all practitioners having a power of attorney in the application. Providing this information in the Application Data Sheet does not constitute a power of attorney in the application (see 37 CFR 1.32).
Enter either Customer Number or complete the Representative Name section below. If both sections are completed the Customer Number will be used for the Representative Information during processing.

Please Select One:	◉ Customer Number	○ US Patent Practitioner	○ US Representative (37 CFR 11.9)
Customer Number	50625		

Domestic Priority Information:

This section allows for the applicant to claim benefit under 35 U.S.C. 119(e), 120, 121, or 365(c). Providing this information in the application data sheet constitutes the specific reference required by 35 U.S.C. 119(e) or 120, and 37 CFR 1.78(a)(2) or CFR 1.78(a)(4), and need not otherwise be made part of the specification.

Prior Application Status	Pending	Remove	
Application Number	Continuity Type	Prior Application Number	Filing Date (YYYY-MM-DD)
	Continuation of	10865547	2004-06-10
Prior Application Status	Abandoned	Remove	
Application Number	Continuity Type	Prior Application Number	Filing Date (YYYY-MM-DD)
10865547	non provisional of	60477845	2003-06-10

Under the Paperwork Reduction Act of 1995, no persons are required to respond to a collection of information unless it contains a valid OMB control number.

Application Data Sheet 37 CFR 1.76	Attorney Docket Number	UBI-002B
	Application Number	
Title of Invention	SYSTEM AND METHOD FOR PERFORMING HIGH-SPEED COMMUNICATIONS OVER FIBER OPTICAL NETWORKS	

Prior Application Status	Abandoned		Remove
Application Number	Continuity Type	Prior Application Number	Filing Date (YYYY-MM-DD)
10865547	non provisional of	60480488	2003-06-21
Additional Domestic Priority Data may be generated within this form by selecting the **Add** button.			Add

Foreign Priority Information:

This section allows for the applicant to claim benefit of foreign priority and to identify any prior foreign application for which priority is not claimed. Providing this information in the application data sheet constitutes the claim for priority as required by 35 U.S.C. 119(b) and 37 CFR 1.55(a).

Remove

Application Number	Country i	Parent Filing Date (YYYY-MM-DD)	Priority Claimed
			○ Yes ◉ No

Additional Foreign Priority Data may be generated within this form by selecting the **Add** button. Add

Assignee Information:

Providing this information in the application data sheet does not substitute for compliance with any requirement of part 3 of Title 37 of the CFR to have an assignment recorded in the Office.

Assignee 1 Remove

If the Assignee is an Organization check here. ☐

Prefix	**Given Name**	Middle Name	**Family Name**	Suffix

Mailing Address Information:

Address 1			
Address 2			
City		**State/Province**	
Country i		Postal Code	
Phone Number		Fax Number	
Email Address			

Additional Assignee Data may be generated within this form by selecting the **Add** button. Add

Signature:

A signature of the applicant or representative is required in accordance with 37 CFR 1.33 and 10.18. Please see 37 CFR 1.4(d) for the form of the signature.

Signature	/James Albert Ward #34031/			Date (YYYY-MM-DD)	2007-06-30
First Name	James	Last Name	Ward	Registration Number	34041

Under the Paperwork Reduction Act of 1995, no persons are required to respond to a collection of information unless it contains a valid OMB control number.

Application Data Sheet 37 CFR 1.76	Attorney Docket Number	UBI-002B
	Application Number	
Title of Invention	SYSTEM AND METHOD FOR PERFORMING HIGH-SPEED COMMUNICATIONS OVER FIBER OPTICAL NETWORKS	

This collection of information is required by 37 CFR 1.76. The information is required to obtain or retain a benefit by the public which is to file (and by the USPTO to process) an application. Confidentiality is governed by 35 U.S.C. 122 and 37 CFR 1.14. This collection is estimated to take 23 minutes to complete, including gathering, preparing, and submitting the completed application data sheet form to the USPTO. Time will vary depending upon the individual case. Any comments on the amount of time you require to complete this form and/or suggestions for reducing this burden, should be sent to the Chief Information Officer, U.S. Patent and Trademark Office, U.S. Department of Commerce, P.O. Box 1450, Alexandria, VA 22313-1450. DO NOT SEND FEES OR COMPLETED FORMS TO THIS ADDRESS. **SEND TO: Commissioner for Patents, P.O. Box 1450, Alexandria, VA 22313-1450.**

Privacy Act Statement

The Privacy Act of 1974 (P.L. 93-579) requires that you be given certain information in connection with your submission of the attached form related to a patent application or patent. Accordingly, pursuant to the requirements of the Act, please be advised that: (1) the general authority for the collection of this information is 35 U.S.C. 2(b)(2); (2) furnishing of the information solicited is voluntary; and (3) the principal purpose for which the information is used by the U.S. Patent and Trademark Office is to process and/or examine your submission related to a patent application or patent. If you do not furnish the requested information, the U.S. Patent and Trademark Office may not be able to process and/or examine your submission, which may result in termination of proceedings or abandonment of the application or expiration of the patent.

The information provided by you in this form will be subject to the following routine uses:

1. The information on this form will be treated confidentially to the extent allowed under the Freedom of Information Act (5 U.S.C. 552) and the Privacy Act (5 U.S.C. 552a). Records from this system of records may be disclosed to the Department of Justice to determine whether the Freedom of Information Act requires disclosure of these records.

2. A record from this system of records may be disclosed, as a routine use, in the course of presenting evidence to a court, magistrate, or administrative tribunal, including disclosures to opposing counsel in the course of settlement negotiations.

3. A record in this system of records may be disclosed, as a routine use, to a Member of Congress submitting a request involving an individual, to whom the record pertains, when the individual has requested assistance from the Member with respect to the subject matter of the record.

4. A record in this system of records may be disclosed, as a routine use, to a contractor of the Agency having need for the information in order to perform a contract. Recipients of information shall be required to comply with the requirements of the Privacy Act of 1974, as amended, pursuant to 5 U.S.C. 552a(m).

5. A record related to an International Application filed under the Patent Cooperation Treaty in this system of records may be disclosed, as a routine use, to the International Bureau of the World Intellectual Property Organization, pursuant to the Patent Cooperation Treaty.

6. A record in this system of records may be disclosed, as a routine use, to another federal agency for purposes of National Security review (35 U.S.C. 181) and for review pursuant to the Atomic Energy Act (42 U.S.C. 218(c)).

7. A record from this system of records may be disclosed, as a routine use, to the Administrator, General Services, or his/her designee, during an inspection of records conducted by GSA as part of that agency's responsibility to recommend improvements in records management practices and programs, under authority of 44 U.S.C. 2904 and 2906. Such disclosure shall be made in accordance with the GSA regulations governing inspection of records for this purpose, and any other relevant (i.e., GSA or Commerce) directive. Such disclosure shall not be used to make determinations about individuals.

8. A record from this system of records may be disclosed, as a routine use, to the public after either publication of the application pursuant to 35 U.S.C. 122(b) or issuance of a patent pursuant to 35 U.S.C. 151. Further, a record may be disclosed, subject to the limitations of 37 CFR 1.14, as a routine use, to the public if the record was filed in an application which became abandoned or in which the proceedings were terminated and which application is referenced by either a published application, an application open to public inspections or an issued patent.

9. A record from this system of records may be disclosed, as a routine use, to a Federal, State, or local law enforcement agency, if the USPTO becomes aware of a violation or potential violation of law or regulation.

SYSTEM AND METHOD FOR PERFORMING HIGH-SPEED COMMUNICATIONS OVER FIBER OPTICAL NETWORKS

ABSTRACT OF THE DISCLOSURE

Processing a received optical signal in an optical communication network includes equalizing a received optical signal to provide an equalized signal, demodulating the equalized signal according to an m-ary modulation format to provide a demodulated signal, decoding the demodulated signal according to an inner code to provide an inner-decoded signal, and decoding the inner-decoded signal according to an outer code. Other aspects include other features such as equalizing an optical channel including storing channel characteristics for the optical channel associated with a client, loading the stored channel characteristics during a waiting period between bursts on the channel, and equalizing a received burst from the client using the loaded channel characteristics.

Under the Paperwork Reduction Act of 1995, no persons are required to respond to a collection of information unless it displays a valid OMB control number.

UTILITY PATENT APPLICATION TRANSMITTAL

(Only for new nonprovisional applications under 37 CFR 1.53(b))

Attorney Docket No.	UBI-002B
First Inventor	Soto, Alexander I. et al.
Title	SYSTEM AND METHOD FOR PERFORMIN
Express Mail Label No.	N/A

APPLICATION ELEMENTS

See MPEP chapter 600 concerning utility patent application contents.

ADDRESS TO: **Commissioner for Patents**
P.O. Box 1450
Alexandria VA 22313-1450

1. ☐ **Fee Transmittal Form** (e.g., PTO/SB/17)
   (Submit an original and a duplicate for fee processing)
2. ☑ **Applicant claims small entity status**. See 37 CFR 1.27.
3. ☑ **Specification** [*Total Pages* 21]
   Both the claims and abstract must start on a new page
   (For information on the preferred arrangement, see MPEP 608.01(a))
4. ☑ **Drawing(s)** (*35 U.S.C. 113*) [*Total Sheets* 7]
5. **Oath or Declaration** [*Total Sheets* 4]
   a. ☐ Newly executed (original or copy)
   b. ☑ A copy from a prior application (37 CFR 1.63(d))
   (for continuation/divisional with Box 18 completed)
   i. ☐ DELETION OF INVENTOR(S)
   Signed statement attached deleting inventor(s) name in the prior application, see 37 CFR 1.63(d)(2) and 1.33(b).
6. ☑ **Application Data Sheet.** See 37 CFR 1.76
7. ☐ **CD-ROM or CD-R** in duplicate, large table or Computer Program *(Appendix)*
   ☐ Landscape Table on CD
8. **Nucleotide and/or Amino Acid Sequence Submission**
   (if applicable, items a. – c. are required)
   a. ☐ Computer Readable Form (CRF)
   b. Specification Sequence Listing on:
      i. ☐ CD-ROM or CD-R (2 copies); or
      ii. ☐ Paper
   c. ☐ Statements verifying identity of above copies

ACCOMPANYING APPLICATION PARTS

9. ☐ **Assignment Papers** (cover sheet & document(s))
   Name of Assignee_____
10. ☐ **37 CFR 3.73(b) Statement** *(when there is an assignee)* ☑ **Power of Attorney**
11. ☐ **English Translation Document** *(if applicable)*
12. ☐ **Information Disclosure Statement** (PTO/SB/08 or PTO-1449)
    ☐ Copies of citations attached
13. ☐ **Preliminary Amendment**
14. ☐ **Return Receipt Postcard** (MPEP 503)
    (*Should be specifically itemized)*
15. ☐ **Certified Copy of Priority Document(s)**
    (if foreign priority is claimed)
16. ☐ **Nonpublication Request** under 35 U.S.C. 122(b)(2)(B)(i). Applicant must attach form PTO/SB/35 or equivalent.
17. ☐ Other:_____

18. If a CONTINUING APPLICATION, *check appropriate box, and supply the requisite information below and in the first sentence of the specification following the title, or in an Application Data Sheet under 37 CFR 1.76:*

☑ Continuation ☐ Divisional ☐ Continuation-in-part (CIP) of prior application No.: 10/865,547

Prior application information: *Examiner* Phan, Hanh *Art Unit:* 2613

19. CORRESPONDENCE ADDRESS

☑ The address associated with Customer Number: 50,625 ***OR*** ☐ Correspondence address below

Name					
Address					
City		State		Zip Code	
Country		Telephone		Email	

Signature	/James Albert Ward #34014/	Date	June 30, 2007
Name (Print/Type)	James Albert Ward	Registration No. (Attorney/Agent)	34,041

This collection of information is required by 37 CFR 1.53(b). The information is required to obtain or retain a benefit by the public which is to file (and by the USPTO to process) an application. Confidentiality is governed by 35 U.S.C. 122 and 37 CFR 1.11 and 1.14. This collection is estimated to take 12 minutes to complete, including gathering, preparing, and submitting the completed application form to the USPTO. Time will vary depending upon the individual case. Any comments on the amount of time you require to complete this form and/or suggestions for reducing this burden, should be sent to the Chief Information Officer, U.S. Patent and Trademark Office, U.S. Department of Commerce, P.O. Box 1450, Alexandria, VA 22313-1450. DO NOT SEND FEES OR COMPLETED FORMS TO THIS ADDRESS. **SEND TO: Commissioner for Patents, P.O. Box 1450, Alexandria, VA 22313-1450.**
If you need assistance in completing the form, call 1-800-PTO-9199 and select option 2.

CLAIMS

1. A method for equalizing upstream and downstream channels in a passive optical network having an Optical Line Terminator (OLT) and an Optical Networking Unit and/or Optical Networking Terminal (ONU/ONT), the method comprising the steps of:

sending a first training sequence in the downstream channel from the OLT;

receiving the first training sequence at the ONU/ONT;

equalizing the downstream channel responsive the received first training sequence;

receiving network parameters from the equalized downstream channel at the ONU/ONT;

sending a second training sequence in the upstream channel from the ONU/ONT;

receiving the second training sequence at the OLT; and

equalizing the upstream channel responsive to the received second training sequence.

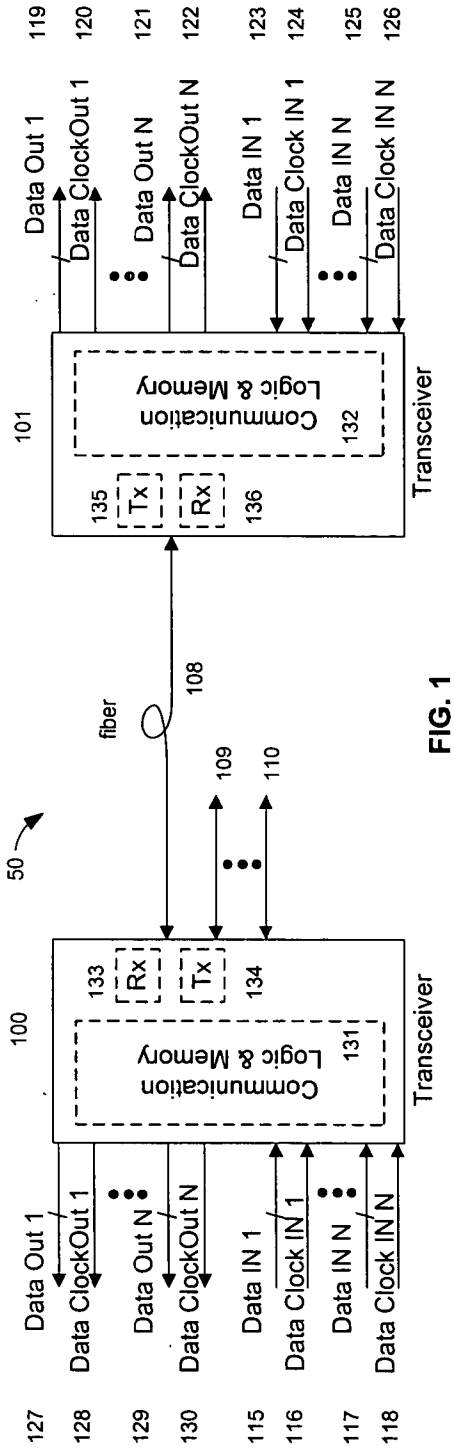
50
100
101
Transceiver
Communication Logic & Memory
131
132
Tx
Rx
133
134
135
136
Data Out 1
Data ClockOut 1
Data Out N
Data ClockOut N
Data IN 1
Data Clock IN 1
Data IN N
Data Clock IN N
127
128
129
130
115
116
117
118
119
120
121
122
123
124
125
126
fiber
108
109
110

FIG. 1

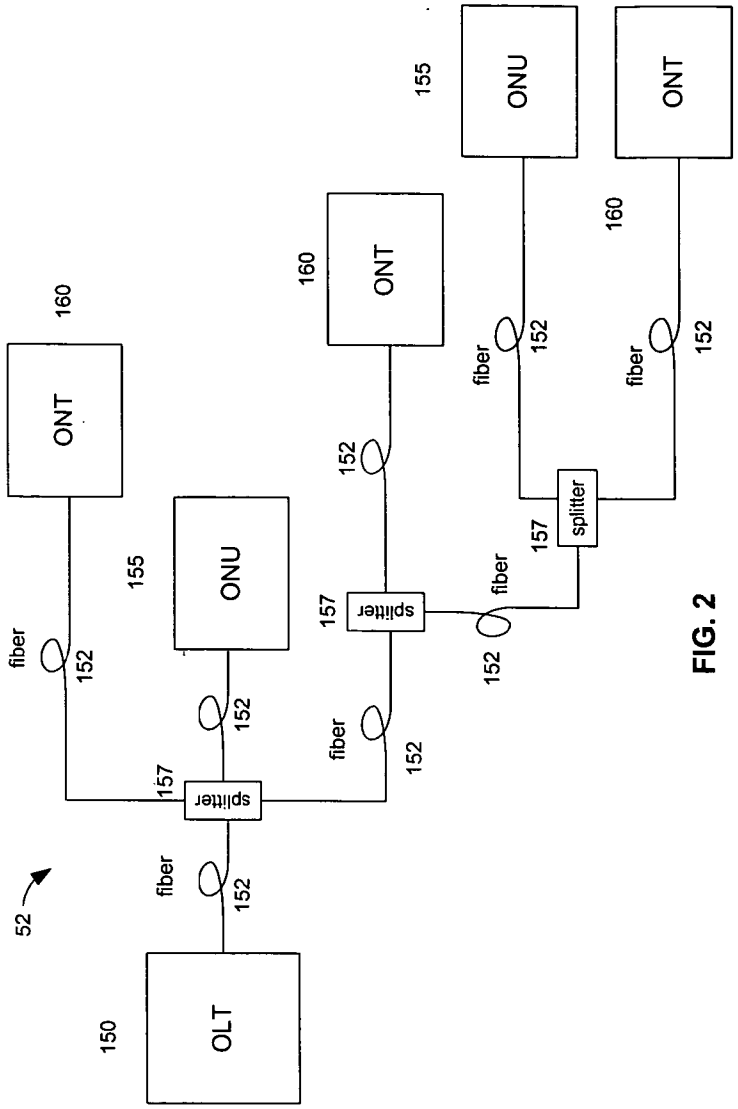
52
OLT
150
fiber
152
splitter
157
ONU
155
ONT
160

FIG. 2

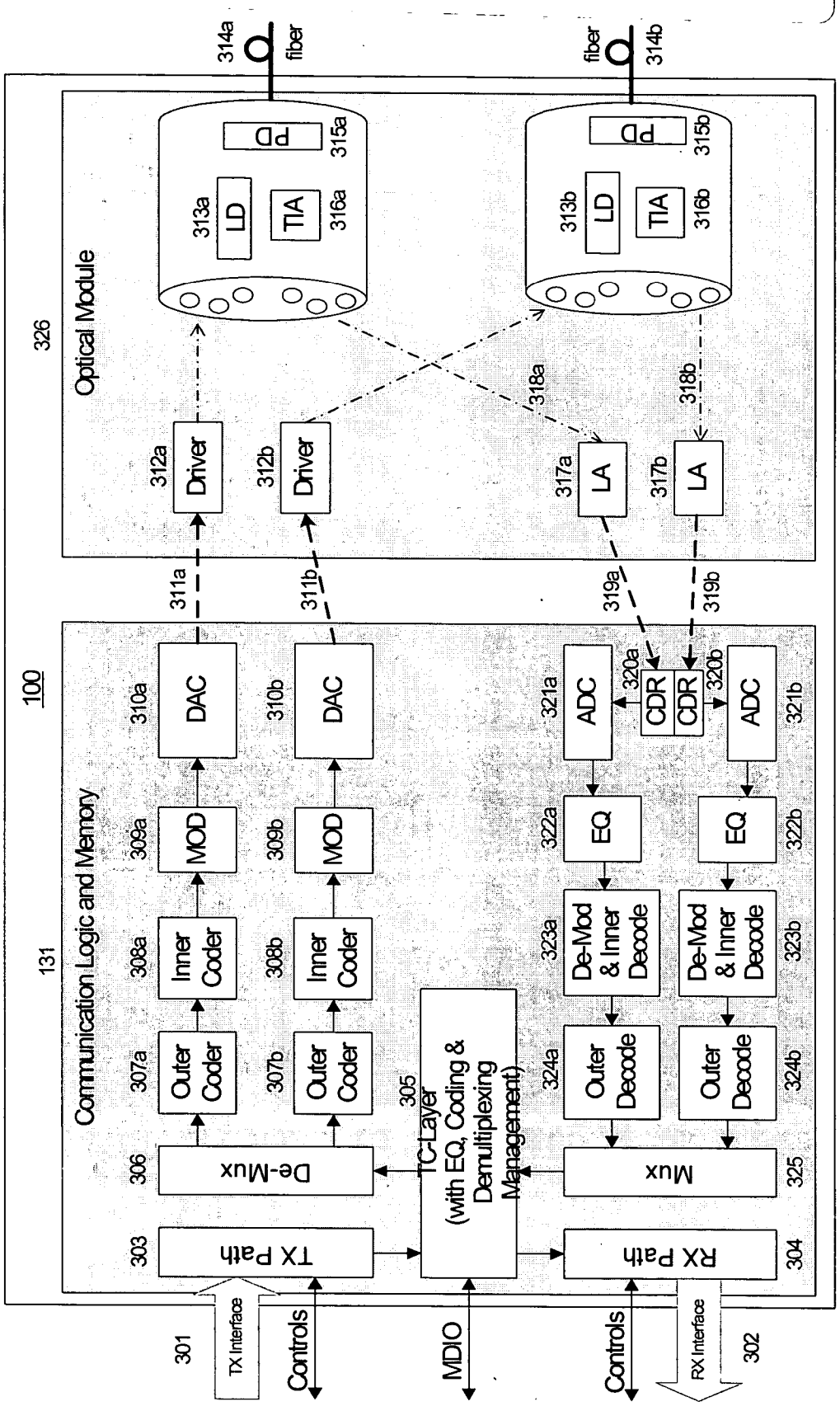
100
131
Communication Logic and Memory
326
Optical Module
301
TX Interface
Controls
MDIO
Controls
RX Interface
302
303
TX Path
306
De-Mux
307a
Outer Coder
307b
Outer Coder
308a
Inner Coder
308b
Inner Coder
309a
MOD
309b
MOD
310a
DAC
310b
DAC
311a
311b
305
TC-Layer (with EQ, Coding & Demultiplexing Management)
304
RX Path
325
Mux
324a
Outer Decode
324b
Outer Decode
323a
De-Mod & Inner Decode
323b
De-Mod & Inner Decode
322a
EQ
322b
EQ
321a
ADC
321b
ADC
320a
CDR
320b
CDR
319a
319b
312a
Driver
312b
Driver
313a
LD
313b
LD
316a
TIA
316b
TIA
315a
PD
315b
PD
317a
LA
317b
LA
318a
318b
314a
fiber
fiber
314b

FIG. 3

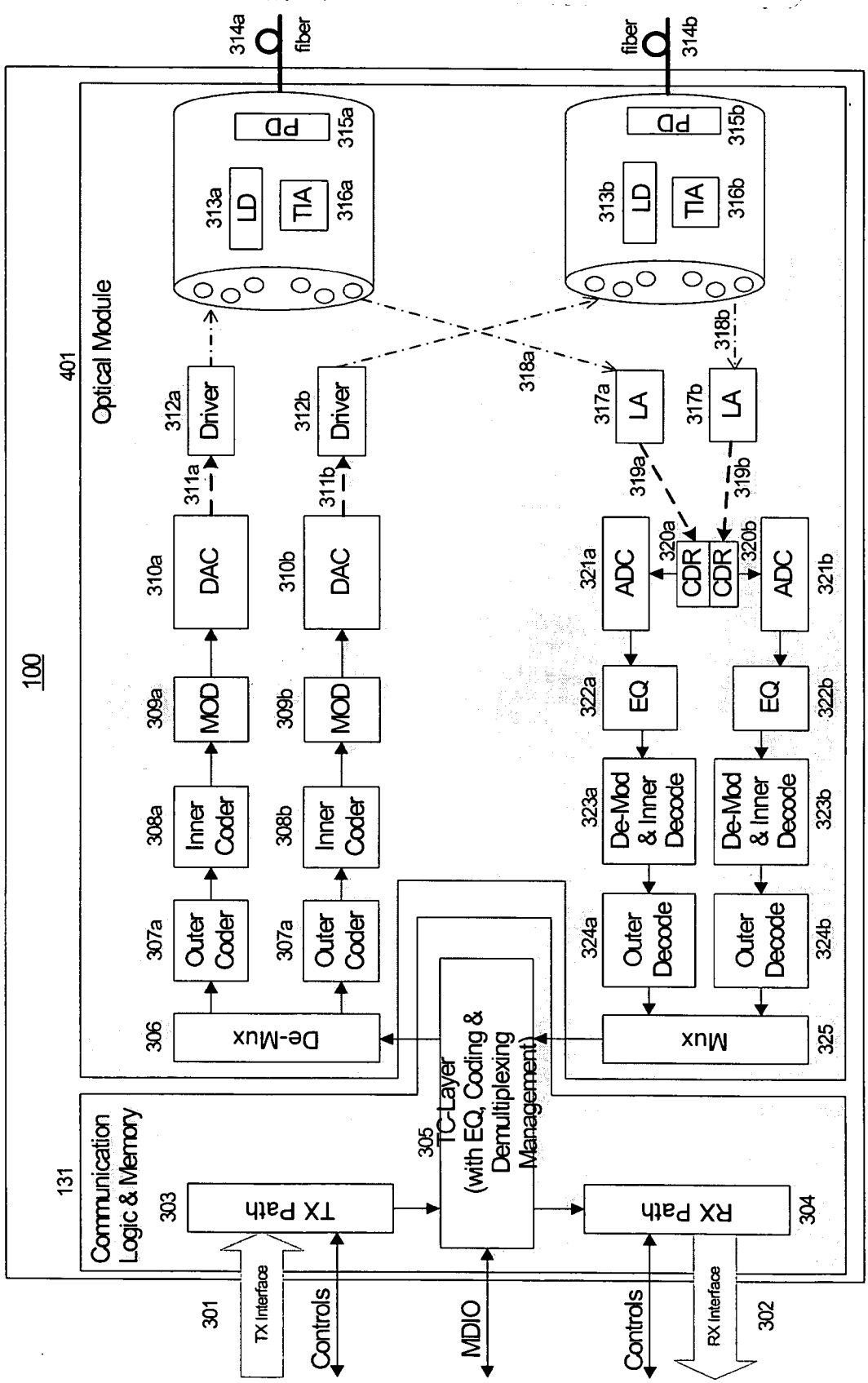
100
Optical Module
401
Communication Logic & Memory
131
TX Path
303
RX Path
304
TC-Layer (with EQ, Coding & Demultiplexing Management)
305
De-Mux
306
Outer Coder
307a
Inner Coder
308a
MOD
309a
DAC
310a
311a
Driver
312a
LD
313a
TIA
316a
PD
315a
314a
fiber
Outer Coder
307a
Inner Coder
308b
MOD
309b
DAC
310b
311b
Driver
312b
LD
313b
TIA
316b
PD
315b
fiber
314b
318a
318b
LA
317a
LA
317b
319a
319b
ADC
321a
CDR
320a
CDR
320b
ADC
321b
EQ
322a
EQ
322b
De-Mod & Inner Decode
323a
De-Mod & Inner Decode
323b
Outer Decode
324a
Outer Decode
324b
Mux
325
TX Interface
301
Controls
MDIO
Controls
RX Interface
302

FIG. 4

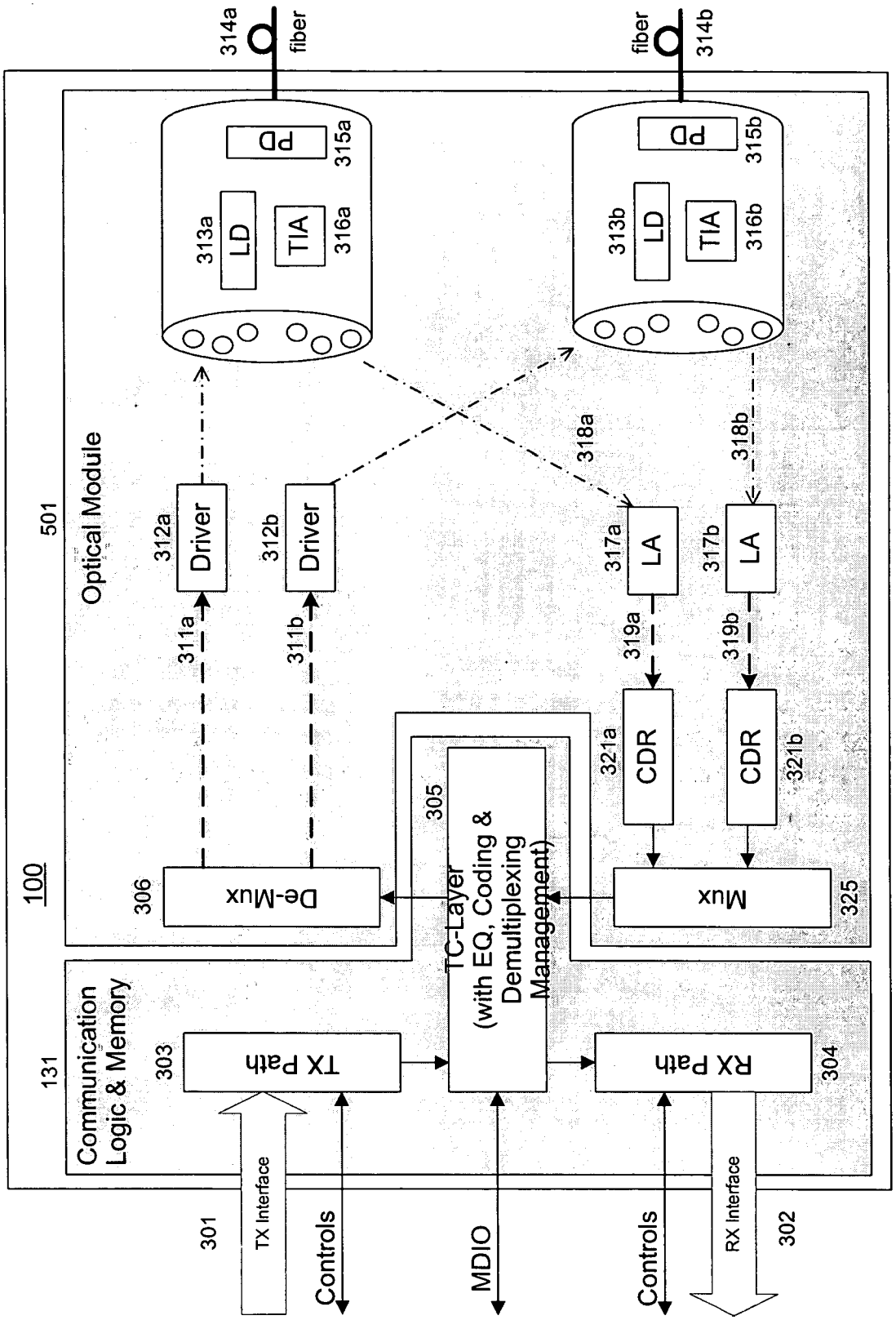
100
131
Communication Logic & Memory
501
Optical Module
314a
fiber
fiber
314b
PD
315a
PD
315b
313a
LD
TIA
316a
313b
LD
TIA
316b
312a
Driver
312b
Driver
311a
311b
318a
318b
317a
LA
317b
LA
319a
319b
321a
CDR
CDR
321b
306
De-Mux
305
TC-Layer
(with EQ, Coding & Demultiplexing Management)
Mux
325
303
TX Path
RX Path
304
301
TX Interface
Controls
MDIO
Controls
RX Interface
302

FIG. 5

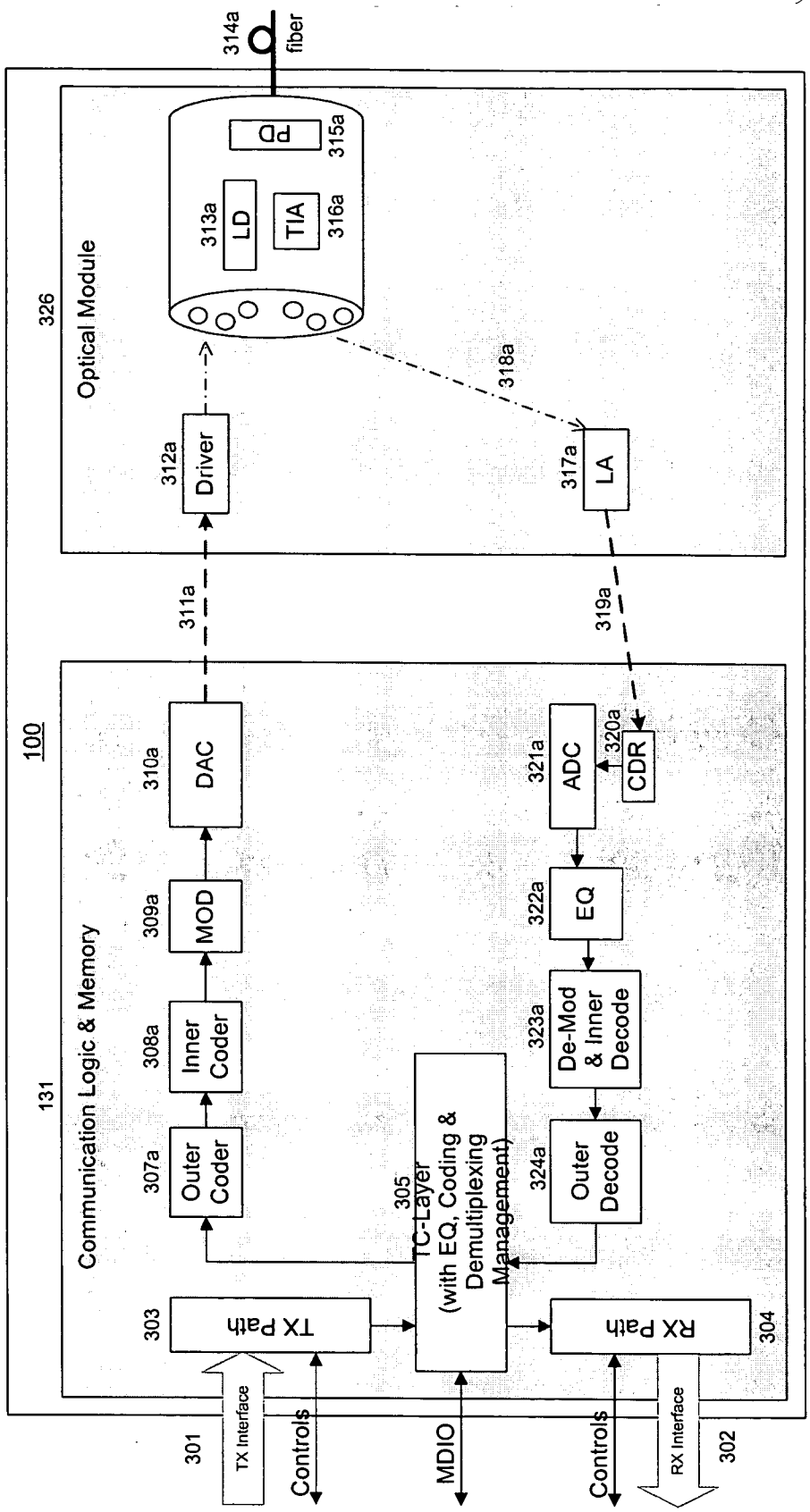
100
131
Communication Logic & Memory
326
Optical Module
314a
fiber
PD
315a
LD
313a
TIA
316a
312a
Driver
318a
317a
LA
311a
319a
310a
DAC
309a
MOD
308a
Inner Coder
307a
Outer Coder
305
TC-Layer
(with EQ, Coding & Demultiplexing Management)
303
TX Path
321a
ADC
320a
CDR
322a
EQ
323a
De-Mod & Inner Decode
324a
Outer Decode
RX Path
304
301
TX Interface
Controls
MDIO
Controls
RX Interface
302

FIG. 6

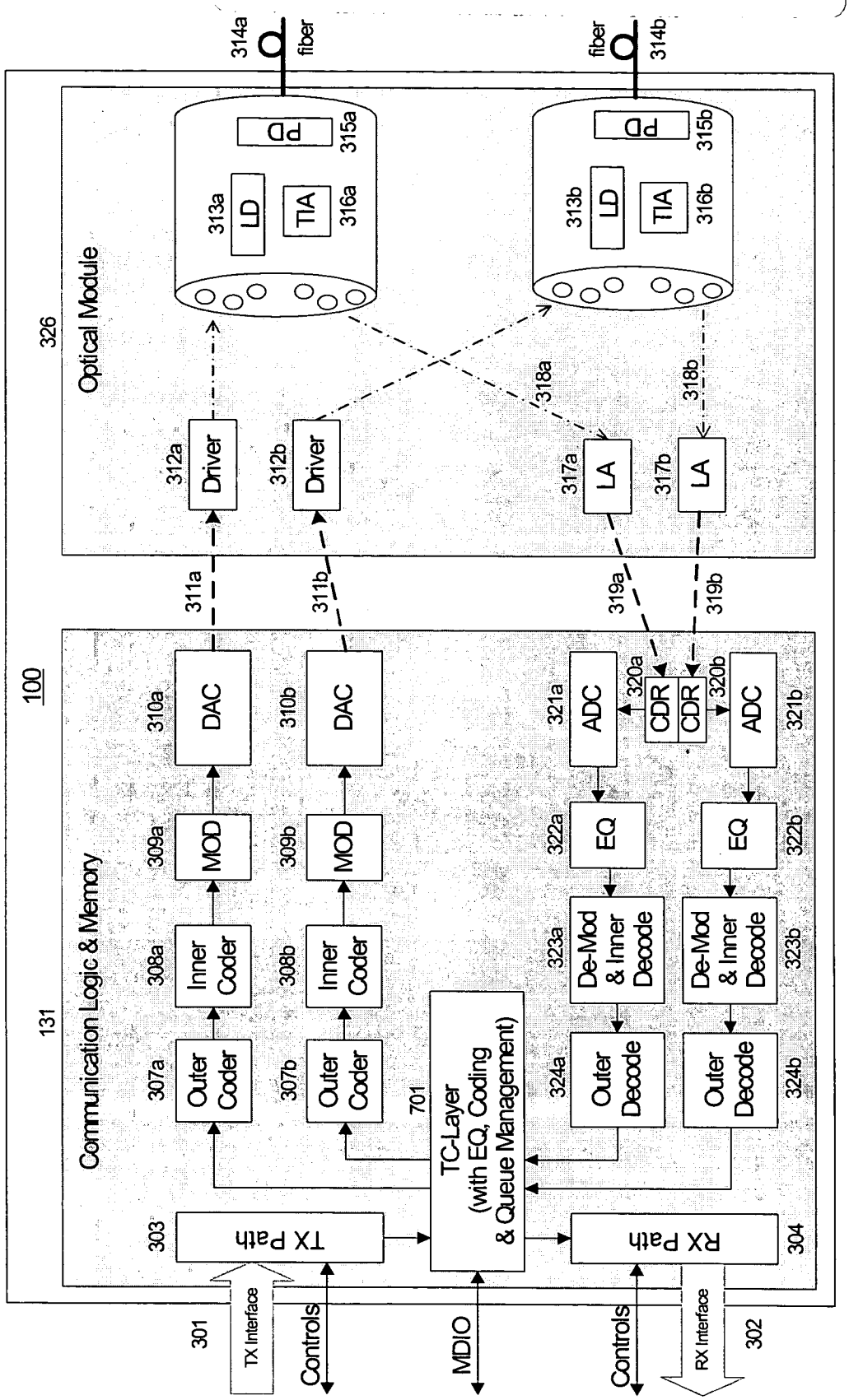
100
131
Communication Logic & Memory
326
Optical Module
301
TX Interface
Controls
MDIO
Controls
RX Interface
302
303
TX Path
304
RX Path
307a
Outer Coder
307b
Outer Coder
308a
Inner Coder
308b
Inner Coder
309a
MOD
309b
MOD
310a
DAC
310b
DAC
311a
311b
312a
Driver
312b
Driver
313a
LD
TIA
316a
PD
315a
313b
LD
TIA
316b
PD
315b
314a
fiber
314b
fiber
317a
LA
317b
LA
318a
318b
319a
319b
320a
CDR
CDR
320b
321a
ADC
321b
ADC
322a
EQ
322b
EQ
323a
De-Mod & Inner Decode
323b
De-Mod & Inner Decode
324a
Outer Decode
324b
Outer Decode
701
TC-Layer (with EQ, Coding & Queue Management)

FIG. 7

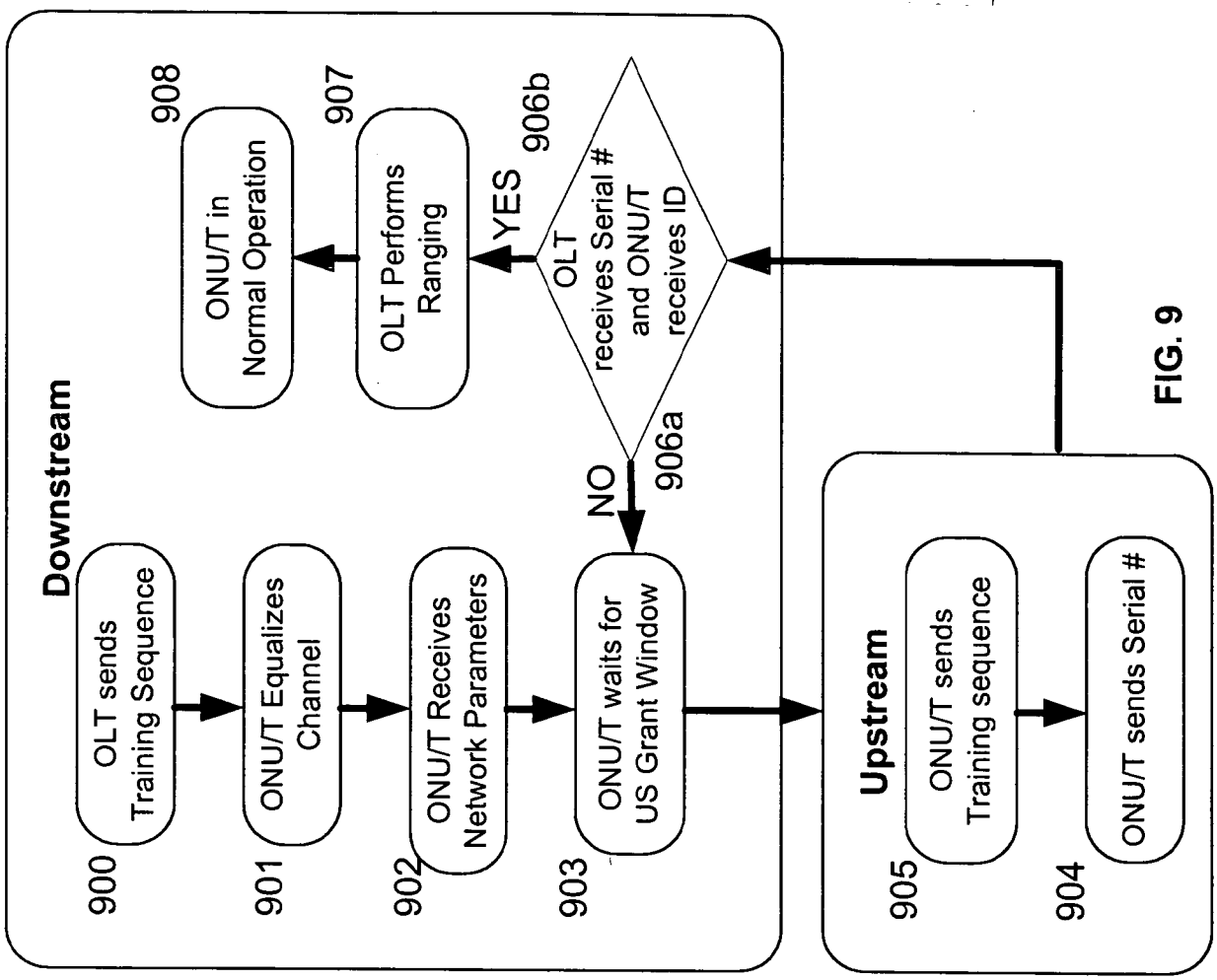
Downstream
900
OLT sends Training Sequence
901
ONU/T Equalizes Channel
902
ONU/T Receives Network Parameters
903
ONU/T waits for US Grant Window
906a
NO
906b
OLT receives Serial # and ONU/T receives ID
YES
907
OLT Performs Ranging
908
ONU/T in Normal Operation
Upstream
905
ONU/T sends Training sequence
904
ONU/T sends Serial #

FIG. 9

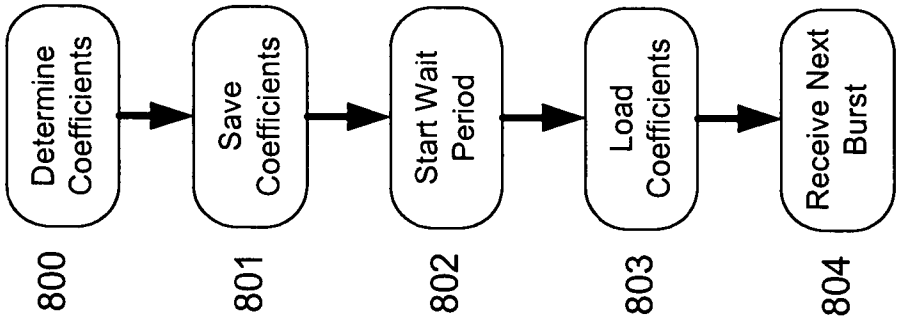
800
Determine Coefficients
801
Save Coefficients
802
Start Wait Period
803
Load Coefficients
804
Receive Next Burst

FIG. 8

OIPE JC11
OCT 0 8 2004
PATENT & TRADEMARK OFFICE

Attorney's Docket No.: 17740-003001
Client's Ref. No.:

COMBINED DECLARATION AND POWER OF ATTORNEY

As a below named inventor, I hereby declare that:

My residence, post office address and citizenship are as stated below next to my name.

I believe I am the original, first and sole inventor (if only one name is listed below) or an original, first and joint inventor (if plural names are listed below) of the subject matter which is claimed and for which a patent is sought on the invention entitled SYSTEM AND METHOD FOR PERFORMING HIGH-SPEED COMMUNICATIONS OVER FIBER OPTICAL NETWORKS, the specification of which:

[] is attached hereto.
[X] was filed on June 10, 2004 as Application Serial No. 10/865,547 and was amended on _____.
[] was described and claimed in PCT International Application No. _____ filed on _____ and as amended under PCT Article 19 on _____.

I hereby state that I have reviewed and understand the contents of the above-identified specification, including the claims, as amended by any amendment referred to above.

I acknowledge the duty to disclose all information I know to be material to patentability in accordance with Title 37, Code of Federal Regulations, §1.56.

I hereby claim the benefit under Title 35, United States Code, §119(e)(1) of any United States provisional application(s) listed below:

U.S. Serial No.	Filing Date	Status
60/477,845	June 10, 2003	
60/480,488	June 21, 2003	

I hereby claim the benefit under Title 35, United States Code, §120 of any United States application(s) listed below and, insofar as the subject matter of each of the claims of this application is not disclosed in the prior United States application in the manner provided by the first paragraph of Title 35, United States Code, §112, I acknowledge the duty to disclose all information I know to be material to patentability as defined in Title 37, Code of Federal Regulations, §1.56(a) which became available between the filing date of the prior application and the national or PCT international filing date of this application:

U.S. Serial No.	Filing Date	Status

I hereby claim foreign priority benefits under Title 35, United States Code, §119 of any foreign application(s) for patent or inventor's certificate or of any PCT international application(s) designating at least one country other than the United States of America listed below and have also identified below any foreign application for patent or inventor's certificate or any PCT international application(s) designating at least one country other than the United States of America filed by me on the same subject matter having a filing date before that of the application(s) of which priority is claimed:

Country	Application No.	Filing Date	Priority Claimed
			[ ] Yes [ ] No
			[ ] Yes [ ] No

Combined Declaration and Power of Attorney

I hereby appoint the following attorneys and/or agents to prosecute this application and to transact all business in the Patent and Trademark Office connected therewith:

Mark D. Kirkland, Reg. No. 40,048
David J. Goren, Reg. No. 34,609
Mary Ann Dillahunty, Reg. No. 34,576
Paul A. Pysher, Reg. No. 40,780
Jennifer A. Zanocco, Reg. No. 54,563
Roger S. Borovoy, Reg. No. 20,193
Hans R. Troesch, Reg. No. 36,950
Tim H. Pham, Reg. No. 48,589
Kelvin M. Vivian, Reg. No. 53,727
Brian J. Gustafson, Reg. No. 52,978

Direct all telephone calls to MARK D. KIRKLAND at telephone number (650) 839-5070.

Direct all correspondence to the following:

26181
PTO Customer Number

I hereby declare that all statements made herein of my own knowledge are true and that all statements made on information and belief are believed to be true; and further that these statements were made with the knowledge that willful false statements and the like so made are punishable by fine or imprisonment, or both, under Section 1001 of Title 18 of the United States Code and that such willful false statements may jeopardize the validity of the application or any patents issued thereon.

Full Name of Inventor: ALEXANDER I. SOTO
Inventor's Signature: Alexander Soto Date: 9/21/04
Residence Address: San Diego, California
Citizenship: United States
Post Office Address: 7673 Hazard Center Drive
San Diego, California 92108

Full Name of Inventor: WALTER G. SOTO
Inventor's Signature: Walter Soto Date: 9/21/04
Residence Address: San Clemente, CA
Citizenship: United States
Post Office Address: 2020 Costero Hermoso
San Clemente, CA 92673

20921051.doc

OIPE JAN 26 2005 PATENT & TRADEMARK OFFICE

PTO/SB/82 (09-04)
Approved for use through 11/30/2005. OMB 0651-0035
U.S. Patent and Trademark Office; U.S. DEPARTMENT OF COMMERCE
Under the Paperwork Reduction Act of 1995, no persons are required to respond to a collection of information unless it displays a valid OMB control number.

REVOCATION OF POWER OF ATTORNEY WITH NEW POWER OF ATTORNEY AND CHANGE OF CORRESPONDENCE ADDRESS

Application Number	10/865,547
Filing Date	June 10, 2004
First Named Inventor	Alexander I. Soto
Art Unit	Unknown
Examiner Name	Unknown
Attorney Docket Number	UBIS-002

I hereby revoke all previous powers of attorney given in the above-identified application.

☐ A Power of Attorney is submitted herewith.

OR

☑ I hereby appoint the practitioners associated with the Customer Number: 000050625

☐ Please change the correspondence address for the above-identified application to:

☑ The address associated with Customer Number: 000050625

OR

☐ Firm *or* Individual Name					
Address					
City		State		Zip	
Country					
Telephone		Fax			

I am the:

☑ Applicant/Inventor.

☐ Assignee of record of the entire interest. See 37 CFR 3.71.
Statement under 37 CFR 3.73(b) is enclosed. (Form PTO/SB/96)

SIGNATURE of Applicant or Assignee of Record

Signature	Alexander SA		
Name	Alexander I. Soto		
Date	1/16/05	Telephone	949-836-5735

NOTE: Signatures of all the inventors or assignees of record of the entire interest or their representative(s) are required. Submit multiple forms if more than one signature is required, see below*.

☑ *Total of 2 forms are submitted.

This collection of information is required by 37 CFR 1.36. The information is required to obtain or retain a benefit by the public which is to file (and by the USPTO to process) an application. Confidentiality is governed by 35 U.S.C. 122 and 37 CFR 1.11 and 1.14. This collection is estimated to take 3 minutes to complete, including gathering, preparing, and submitting the completed application form to the USPTO. Time will vary depending upon the individual case. Any comments on the amount of time you require to complete this form and/or suggestions for reducing this burden, should be sent to the Chief Information Officer, U.S. Patent and Trademark Office, U.S. Department of Commerce, P.O. Box 1450, Alexandria, VA 22313-1450. DO NOT SEND FEES OR COMPLETED FORMS TO THIS ADDRESS. SEND TO: **Commissioner for Patents, P.O. Box 1450, Alexandria, VA 22313-1450.**

If you need assistance in completing the form, call 1-800-PTO-9199 and select option 2.

JAN 2 6 2005
PATENT & TRADEMARK OFFICE

PTO/SB/82 (09-04)
Approved for use through 11/30/2005. OMB 0651-0035
U.S. Patent and Trademark Office; U.S. DEPARTMENT OF COMMERCE
Under the Paperwork Reduction Act of 1995, no persons are required to respond to a collection of information unless it displays a valid OMB control number.

REVOCATION OF POWER OF ATTORNEY WITH NEW POWER OF ATTORNEY AND CHANGE OF CORRESPONDENCE ADDRESS

Application Number	10/865,547
Filing Date	June 10, 2004
First Named Inventor	Alexander I. Soto
Art Unit	Unknown
Examiner Name	Unknown
Attorney Docket Number	UBIS-002

I hereby revoke all previous powers of attorney given in the above-identified application.

☐ A Power of Attorney is submitted herewith.

OR

☑ I hereby appoint the practitioners associated with the Customer Number: 000050625

☐ Please change the correspondence address for the above-identified application to:

☑ The address associated with Customer Number: 000050625

OR

☐ Firm *or* Individual Name					
Address					
City		State		Zip	
Country					
Telephone		Fax			

I am the:

☑ Applicant/Inventor.

☐ Assignee of record of the entire interest. See 37 CFR 3.71.
Statement under 37 CFR 3.73(b) is enclosed. (Form PTO/SB/96)

SIGNATURE of Applicant or Assignee of Record

Signature	Walter Soto		
Name	Walter G. Soto		
Date	1/16/04	Telephone	949-923-5567

NOTE: Signatures of all the inventors or assignees of record of the entire interest or their representative(s) are required. Submit multiple forms if more than one signature is required, see below*.

☑ *Total of 2 forms are submitted.

This collection of information is required by 37 CFR 1.36. The information is required to obtain or retain a benefit by the public which is to file (and by the USPTO to process) an application. Confidentiality is governed by 35 U.S.C. 122 and 37 CFR 1.11 and 1.14. This collection is estimated to take 3 minutes to complete, including gathering, preparing, and submitting the completed application form to the USPTO. Time will vary depending upon the individual case. Any comments on the amount of time you require to complete this form and/or suggestions for reducing this burden, should be sent to the Chief Information Officer, U.S. Patent and Trademark Office, U.S. Department of Commerce, P.O. Box 1450, Alexandria, VA 22313-1450. DO NOT SEND FEES OR COMPLETED FORMS TO THIS ADDRESS. SEND TO: **Commissioner for Patents, P.O. Box 1450, Alexandria, VA 22313-1450.**

If you need assistance in completing the form, call 1-800-PTO-9199 and select option 2.

SYSTEM AND METHOD FOR PERFORMING HIGH-SPEED COMMUNICATIONS OVER FIBER OPTICAL NETWORKS

CROSS-REFERENCES TO RELATED APPLICATIONS

[0001] This application is filed as a 37 C.F.R. 1.53(b)(1) continuation of the commonly-assigned U.S. Patent Application No. 10/865,547 filed on June 10, 2004, now U.S. Patent No. 7,242,868, which claims the benefit of U.S. Provisional Application No. 60/477,845 filed on June 10, 2003, incorporated therein by reference, and U.S. Provisional Application No. 60/480,488 filed on June 21, 2003, incorporated therein by reference.

FIELD OF THE INVENTION

[0002] The invention relates to optical fiber communications.

BACKGROUND OF THE INVENTION

[0003] Line coding is a process by which a communication protocol arranges symbols that represent binary data in a particular pattern for transmission. Conventional line coding used in fiber optic communications includes non-return-to-zero (NRZ), return-to-zero (RZ), and biphase, or Manchester. The binary bit stream derived from these line codes can be directly modulated onto wavelengths of light generated by the resonating frequency of a laser. Traditionally direct binary modulation based transmission offers an advantage with regard to the acceptable signal-to-noise ratio (SNR) at the optical receiver, which is one of the reasons direct binary modulation methods are used in the Datacom Ethernet/IP, Storage Fiber-Channel/FC and Telecom SONET/SDH markets for transmission across nonmultiplexed unidirectional fiber links.

[0004] The performance of a fiber optic network can be measured by the maximum data throughput rate (or information carrying capacity) and the maximum distance between source and destination achievable (or reach). For Passive Optical Networks (PONs) in particular, additional measures of performance are the maximum number of Optical Networking Units (ONUs) and/or Optical Networking Terminals (ONTs) possible on a network and the minimum and maximum distance between the Optical Line Terminator (OLT) and an ONU/ONT. These performance metrics are constrained by, among other things, amplitude degradation and temporal distortions as a result of light traveling through an optical fiber.

[0005] Amplitude degradation is substantially a function of length or distance between two end points of an optical fiber. Temporal distortion mechanisms include intramodal (chromatic) dispersion and intermodal (modal) dispersion. Intramodal dispersion is the dominant temporal dispersion on Single-mode fiber (SMF), while intermodal dispersion is dominant on Multi-mode fiber (MMF). Both types of temporal distortions are measured as functions of frequency or rate of transmission (also referred as line rate of a communication protocol) over distance in MH•km. Temporal distortions are greater, hence a constraint on network performance, with increasing frequency transmission.

SUMMARY OF THE INVENTION

[0006] In general, in one aspect, the invention includes a method for processing a received optical signal in an optical communication network, the method including: determining a first set of coefficients to equalize a portion of an optical signal received over a first optical link including using a blind equalization method that does not use a known training sequence to equalize the portion of the optical signal, equalizing the portion of the optical signal using the determined coefficients, and demodulating the equalized portion of the optical signal according to an m-ary modulation format.

[0007] Aspects of the invention may include one or more of the following features. The method includes determining a second set of coefficients to equalize a portion of an optical signal received over a second optical link. The method includes selecting one of the first or second set of coefficients based on a source of the portion of optical signal being equalized. The portion of the optical signal includes a burst within a time slot of the first optical link. The method includes storing the determined coefficients. The method includes retrieving the stored coefficients for equalizing a second portion of the optical signal corresponding to a portion received from a same source as generated the first portion of the optical signal. The coefficients are retrieved between signal bursts on the first optical link. The stored coefficients are retrieved for respective portions of the optical signals that correspond to respective signal sources. The first optical link includes a link in a point-to-multipoint passive optical network. The m-ary modulation format is selected from the group consisting of quadrature amplitude modulation and pulse amplitude modulation.

The method includes demodulating a received first data stream and demodulating a second data stream received in the optical signal, and multiplexing the first and second data streams.

[0008] In general, in another aspect, the invention includes optical communication system including: a first transceiver coupled by an optical network to a second transceiver and third transceiver, the first transceiver including an equalization block and a modulation block, the equalization block operable to determine a first set of coefficients to equalize a portion of an optical signal received over the optical network from the second transceiver and a second set of coefficients to equalize a portion of the optical signal received over the optical network from the third transceiver, the equalization block including a blind equalization routine that does not use a known training sequence to equalize the portions of the optical signal, the equalization block operable to equalize the portions of the optical signal using the determined coefficients, and the modulation block operable to demodulate equalized portions of the optical signal according to an m-ary modulation format.

[0009] Aspects of the invention may include one or more of the following features. The optical network includes a first optical link for coupling the first and second transceiver, and a second optical link for coupling the first and third transceivers and where the equalization block is operable to select one of the first or second set of coefficients based on a source of the portion of optical signal being equalized. The equalization block is operable to store the first and second sets of coefficients for later retrieval and use to equalize portions of the optical signal. The portion of the optical signal includes a burst within a time slot on the optical network. The equalization block is operable to retrieve the sets of coefficients between signal bursts on the optical network. The optical network includes a link in a point-to-multipoint passive optical network. The m-ary modulation format is selected from the group consisting of quadrature amplitude modulation and pulse amplitude modulation. The system includes a multiplexer, the modulation block operable to demodulating a received first data stream and a second data stream received in the optical signal, and the multiplexer operable to multiplex the first and second data streams. The system includes a transmission convergence layer block for processing data streams received by the first transceiver, the transmission convergence layer block operable to control the demultiplexing of data streams including control of the multiplexer. The optical network is an

optical distribution network. The first transceiver is an optical line terminator. The second and third transceivers are optical network terminals or optical network units.

[0010] In general, in another aspect, the invention includes a method for processing data for transmission in an optical communication network, the method including: demultiplexing a data stream into a first demultiplexed data stream and a second demultiplexed data stream, modulating each of the first and second data streams according to an m-ary modulation format, transmitting the first modulated data stream over a first optical link; and transmitting the second modulated data stream over a second optical link.

[0011] In general, in another aspect, the invention includes an optical communication system including: a demultiplexer operable to demultiplex a data stream into a first demultiplexed data stream and a second demultiplexed data stream, a modulation block operable to modulate each of the first and second data streams according to an m-ary modulation format, transmitting means operable to transmit the first modulated data stream over a first optical link and the second modulated data stream over a second optical link.

[0012] In general, in another aspect, the invention includes a method for processing a received optical signal in an optical communication network, the method including: equalizing a received optical signal to provide an equalized signal, demodulating the equalized signal according to an m-ary modulation format to provide a demodulated signal, decoding the demodulated signal according to an inner code to provide an inner-decoded signal, and decoding the inner-decoded signal according to an outer code.

[0013] Aspects of the invention may include one or more of the following features. The m-ary modulation format is selected from the group consisting of quadrature amplitude modulation and pulse amplitude modulation. Equalizing the received optical signal includes equalizing the received optical signal using a blind equalization routine that does not use a known training sequence. Equalizing the received optical signal includes equalizing the received optical signal using a known training sequence. The known training sequence is multiplexed in a frame within the received optical signal. The inner code includes a trellis code. The outer code includes an error correction code. The outer code includes a Reed Solomon code.

[0014] In general, in another aspect, the invention includes a transceiver including: an equalizer for equalizing a received optical signal to provide an equalized signal, a demodulator

in communication with the equalizer for demodulating the equalized signal according to an m-ary modulation format to provide a demodulated signal, an inner-decoder in communication with the demodulator for decoding the demodulated signal according to an inner code to provide an inner-decoded signal, and an outer-decoder in communication with the inner-decoder for decoding the inner-decoded signal according to an outer code.

[0015] Aspects of the invention may include one or more of the following features. The transceiver includes an optical module including a first bi-directional optical fiber interface including a first detector and a first driver, and a second bi-directional optical fiber interface including a second detector and a second driver, and management means for managing data flow across the first bi-directional optical fiber interface and across the second bi-directional optical fiber interface. The transceiver includes an optical module including a first bi-directional optical fiber interface including a first detector and a first driver, and a second bi-directional optical fiber interface including a second detector and a second driver, and a multiplexer for multiplexing a first demultiplexed data stream received over the first bi-directional optical fiber interface and a second demultiplexed data stream received over the second bi-directional optical fiber interface into a multiplexed data stream for transmission. The transceiver includes an optical module including a first bi-directional optical fiber interface including a first detector and a first driver, and a second bi-directional optical fiber interface including a second detector and a second driver, and a queue manager for managing traffic for a first bi-directional link associated with the first bi-directional optical fiber interface independently from traffic for a second bi-directional link associated with the second bi-directional optical fiber interface.

[0016] In general, in another aspect, the invention includes a transceiver including: an optical module including a first bi-directional optical fiber interface including a first detector and a first driver, and a second bi-directional optical fiber interface including a second detector and a second driver, and management means for managing data flow across the first bi-directional optical fiber interface and across the second bi-directional optical fiber interface.

[0017] Aspects of the invention may include one or more of the following features. The management means includes a multiplexer for multiplexing a first demultiplexed data stream received over the first bi-directional optical fiber interface and a second demultiplexed data stream received over the second bi-directional optical fiber interface into a multiplexed data

stream for transmission. The management means is configured to demultiplex a data stream over a plurality of fiber links that excludes one or more failed fiber links. The management means includes a queue manager for managing traffic across the first bi-directional fiber interface independently from traffic for the second bi-directional fiber interface. The management means is configured to change the alignment of received data bits to adjust for an order of optical fiber connections to the first bi-directional optical fiber interface and the second bi-directional optical fiber interface.

[0018] In general, in another aspect, the invention includes a method for equalizing an optical channel including: storing channel characteristics for the optical channel associated with a client, loading the stored channel characteristics during a waiting period between bursts on the channel, and equalizing a received burst from the client using the loaded channel characteristics.

[0019] Aspects of the invention may include one or more of the following features. The method includes determining that the waiting period occurs before a burst from the client based on a schedule. The method includes updating the stored channel characteristics. The method includes providing a grant window, transmitting an identification number to the client in response to receiving a serial number from the client after the grant window. The method includes determining a distance from an upstream device to the client. The method includes compensating for communication delays between the upstream device and the client based on the determined distance.

[0020] In general, in another aspect, the invention includes a method for communicating data on a fiber optic network, the method including: modulating and demodulating data traffic on an optical link in the network in an m-ary modulation format; encoding and decoding data traffic on an optical link in the network according to an inner coding routine and an outer coding routine, demultiplexing data traffic from an optical link in the network and transmitting the data traffic across a plurality of optical fiber links in the network, multiplexing the data traffic from the plurality of optical fiber links, and equalizing a receive channel in the network to remove temporal distortions.

[0021] Aspects of the invention may include one or more of the following features. The method includes equalizing the receive channel according to a blind equalization routine. The method includes equalizing the receive channel according to a decision directed equalization

routine. The method includes saving and loading coefficients for equalizing the receive channel for each of a plurality of transmitting sources. The method includes saving and loading an inner coding state for the receive channel for each of a plurality of transmitting sources. The method includes saving and loading an outer coding state for the receive channel for each of a plurality of transmitting sources. The method includes excluding one or more failed optical fiber links from the plurality of optical fiber links. The method includes conveying a training sequence for a decision directed equalization routine as part of an in-use communication protocol. A training sequence for a decision directed equalization routine is conveyed as part of the activation process for an optical network terminal or optical network unit. An incorrect connection of an optical fiber link is corrected without having to physically change the connection.

[0022] In general, in another aspect, the invention includes a method for communicating on a passive optical network between a central transmission point and a plurality of receiving client end points, the method including: preparing downstream data for transmission and transmitting an optical downstream continuous mode signal demultiplexed across a plurality of bi-directional fibers using a plurality of wavelengths of light, receiving an optical downstream continuous mode signal demultiplexed from the plurality of bi-directional fibers using the plurality of wavelengths of light and recovering a downstream data transmission, preparing upstream data for transmission and transmitting an optical upstream burst mode signal demultiplexed across the plurality of bi-directional fibers using the plurality of wavelengths of light, and receiving an optical burst mode signal demultiplexed from the plurality of bi-directional fibers using the plurality of wavelengths of light and recovering an upstream data transmission.

[0023] Aspects of the invention may include one or more of the following features. The central transmission point includes an optical line terminal, and the end points are operative as transceivers in a passive optical network. The upstream and downstream data for transmission are conveyed by respective different industry-standard services.

[0024] Implementations of the invention may include one or more of the following advantages.

[0025] A system is proposed that provides for high-speed communications over fiber optic networks. The system may include the use of the one or more of the following techniques either individually or in combination: m-ary modulation; channel equalization; demultiplexing

across multiple fibers, coding and error correction. M-ary modulation allows for increased data throughput for a given line rate due to an increase in the number of bits per symbol transmitted. Channel equalization reduces the effects of temporal distortions allowing for increased reach. Demultiplexing across multiple fibers allows lower lines rates for a given data throughput rate due to the increased aggregate data throughput from the multiplexing. Coding and error correction allows for a greater selection of qualifying optical components that can be used in the network and complements m-ary modulation and channel equalization for overall system performance improvement as measured by transmit energy per bit. These methods when combined (in part or in total) increase the data throughput and reach for fiber optic networks. For PONs in particular, these methods may increase the number of ONU/ONTs and the distance between OLT and ONU/ONT without increasing the line rate as compared to a conventional communication system of equivalent data throughput.

BRIEF DESCRIPTION OF THE DRAWINGS

[0026] FIG. 1 illustrates a fiber optic data network.

[0027] FIG. 2 illustrates a block diagram of a passive optical network.

[0028] FIG. 3 illustrates a block diagram of a high-speed communication system for fiber optic networks.

[0029] FIG. 4 illustrates a block diagram of an alternative high-speed communication system for fiber optic networks.

[0030] FIG. 5 illustrates a block diagram of an alternative high-speed communication system for fiber optic networks.

[0031] FIG. 6 illustrates a block diagram of an alternative high-speed communication system for fiber optic networks.

[0032] FIG. 7 illustrates a block diagram of an alternative high-speed communication system for fiber optic networks.

[0033] FIG. 8 is a flow diagram for an upstream burst mode communication equalization process.

[0034] FIG. 9 is a flow diagram for a downstream continuous mode communication equalization process.

DETAILED DESCRIPTION

[0035] Referring to FIG. 1, wherein like reference numerals designate identical or corresponding parts throughout the several views, a high-level fiber optic data network 50 includes a first transceiver 100 in communication with a second transceiver 101 via a fiber 108. The first transceiver 100 and the second transceiver 101 include transmitter circuitry (Tx) 134, 135 to convert electrical data input signals into modulated light signals for transmission over the fiber 108. In addition, the first transceiver 100 and the second transceiver 101 also include receiver circuitry (Rx) 133, 136 to convert optical signals received via the fiber 108 into electrical signals and to detect and recover encoded data and/or clock signals. First transceiver 100 and second transceiver 101 may contain a micro controller (not shown) and/or other communication logic and memory 131, 132 for network protocol operation. Although the illustrated and described implementations of the transceivers 100, 101 include communication logic and memory in a same package or device as the transmitter circuitry 134, 135 and receiver circuitry 133, 136, other transceiver configurations may also be used.

[0036] First transceiver 100 transmits/receives data to/from the second transceiver 101 in the form of modulated optical light signals of known wavelength via the optical fiber 108. The transmission mode of the data sent over the optical fiber 108 may be continuous, burst or both burst and continuous modes. Both transceivers 100, 101 may transmit a same wavelength (e.g., the light signals are polarized and the polarization of light transmitted from one of the transceivers is perpendicular to the polarization of the light transmitted by the other transceiver). Alternatively, a single wavelength can be used by both transceivers 100, 101 (e.g., the transmissions can be made in accordance with a time-division multiplexing scheme or similar protocol).

[0037] In another implementation, wavelength-division multiplexing (WDM) may also be used. WDM is herein defined as any technique by which two optical signals having different wavelengths may be simultaneously transmitted bi-directionally with one wavelength used in each direction over a single fiber. In yet another implementation, dense wavelength-division multiplexing (DWDM) may be used. DWDM is herein defined as any technique by which more than two optical signals having different wavelengths may be simultaneously transmitted bi-directionally with more than one wavelength used in each direction over a single fiber with each

wavelength unique to a direction. For example, if wavelength division multiplexing is used, the first transceiver 100 may transmit data to the second transceiver 101 utilizing a first wavelength of modulated light conveyed via the fiber 108 and, similarly, the second transceiver 101 may transmit data via the same fiber 108 to the first transceiver 100 utilizing a second wavelength of modulated light conveyed via the same fiber 108. Because only a single fiber is used, this type of transmission system is commonly referred to as a bi-directional transmission system. Although the fiber optic network illustrated in FIG. 1 includes a first transceiver 100 in communication with a second transceiver 101 via a single fiber 108, other implementations of fiber optic networks, such as those having a first transceiver in communication with a plurality of transceivers via a plurality of fibers (not shown), may also be used.

[0038] Electrical data input signals (Data IN 1) 115, as well as any optional clock signal (Data Clock IN 1) 116, are routed to the transceiver 100 from an external data source (not shown) for processing by the communication logic and memory 131. Communication logic and memory 131 process the data and clock signals in accordance with an in-use network protocol. Communication logic and memory 131, 132 provides management functions for received and transmitted data including queue management (e.g., independent link control) for each respective link, demultiplexing/multiplexing and other functions as described further below. The processed signals are transmitted by the transmitter circuitry 134. The resulting modulated light signals produced from the first transceiver's 100 transmitter 134 are then conveyed to the second transceiver 101 via the fiber 108. The second transceiver 101, in turn, receives the modulated light signals via the receiver circuitry 136, converts the light signals to electrical signals, processes the electrical signals using the communication logic and memory 132 (in accordance with an in-use network protocol) and, optionally, outputs the electrical data output signals (Data Out 1) 119, as well as any optional clock signals (Data Clock Out 1) 120.

[0039] Similarly, the second transceiver 101 receives electrical data input signals (Data IN 1) 123, as well as any optional clock signals (Data Clock IN) 124, from an external data source (not shown) for processing by the communication logic and memory 132 and transmission by the transmitter circuitry 135. The resulting modulated light signals produced from the second transceiver's 101 transmitter 135 are then conveyed to the first transceiver 100 using the optical fiber 108. The first transceiver 100, in turn, receives the modulated light signals via the receiver

circuitry 133, converts the light signals to electrical signals, processes the electrical signals using the communication logic and memory 131 (in accordance with an in-use network protocol), and, optionally, outputs the electrical data output signals (Data Out 1) 127, as well as any optional clock signals (Data Clock Out 1) 128.

[0040] Fiber optic data network 50 may also include a plurality of electrical input and clock input signals, denoted herein as Data IN N 117/125 and Data Clock IN N 118/126, respectively, and a plurality of electrical output and clock output signals, denoted herein as Data Out N 129/121 and Data Clock Out N 130/122, respectively. The information provided by the plurality of electrical input signals may or may not be used by a given transceiver to transmit information via the fiber 108 and, likewise, the information received via the fiber 108 by a given transceiver may or may not be outputted by the plurality of electrical output signals. The plurality of electrical signals denoted above can be combined to form data plane or control plane bus(es) for input and output signals respectively. In some implementations, the plurality of electrical data input signals and electrical data output signals are used by logic devices or other devices located outside (not shown) a given transceiver to communicate with the transceiver's communication logic and memory 131, 132, transmit circuitry 134, 135, and/or receive circuitry 133, 136.

[0041] FIG. 2 illustrates an implementation of a passive optical network (PON) 52, where the functions described above associated with the first transceiver 100 and the second transceiver 101 of FIG. 1, are implemented in an optical line terminator (OLT) 150 and one ore more optical networking units (ONU) 155, and/or optical networking terminals (ONT) 160, respectively. PON(s) 52 may be configured in either a point-to-point network architecture, wherein one OLT 150 is connected to one ONT 160 or ONU 155, or a point-to-multipoint network architecture, wherein one OLT 150 is connected to a plurality of ONT(s) 160 and/or ONU(s) 155. In the implementation shown in FIG. 2, an OLT 150 is in communication with multiple ONTs/ONUs 160, 155 via a plurality of optical fibers 152. The fiber 152 coupling the OLT 150 to the PON 52 is also coupled to other fibers 152 connecting the ONTs/ONUs 160, 155 by one or more passive optical splitters 157. All of the optical elements between an OLT and ONTs/ONUs are often referred to as the Optical Distribution Network (ODN). Other alternate network

configurations, including alternate implementations of point-to-multipoint networks are also possible.

[0042] FIG. 3 shows a system block diagram for an implementation of transceiver 100. The following is a description of the functions and responsibilities that are part of an implementation of the Communication Logic & Memory 131 of transceiver 100. The Communication Logic & Memory 131 includes an asynchronous or synchronous system transmit (TX) interface 301 and receive (RX) interface 302 that is supported by the TX Path 303 and RX Path 304 blocks. System interfaces can be selected from conventional interfaces including serial, serial XFI, parallel, GMII, XGMII or XAUI or some other interface may be used. TX Path 303 and RX Path 304 blocks manage the TX and RX interfaces 301, 302 and feed data into and get data from the transmission convergence layer (TC-Layer) block 305. TX Path 303 and RX Path 304 blocks may perform line code adaptation functions (e.g., line coding used outside the transceiver can be terminated by a TX Path block 303 or sourced by a RX Path block 304 to allow a bit stream, cell and/or packet formatted data to be adapted for processing by a TC-Layer block 305). The TC-Layer 305 block creates the transport system that the data traffic, management and control agents will exploit. TC-Layer 305 block includes a TC-layer protocol stack such as specified in the ITU G.984 specification (incorporated herein by reference), IEEE 802.3ah MAC protocol stack specification (incorporated herein by reference) or a derivative thereof. A variety of other protocol stacks may also be used. The TC-Layer 305 block may perform the additional functions of equalizer, coding, queue and demultiplexing management. The TC-Layer 305 block sends transmit data to a DeMux 306 block, which splits the transmitting data into a plurality of data paths (two paths shown in FIG. 3) for demultiplexing data across multiple fibers. Some implementations need not include DeMux 306 block (and hence do not support demultiplexing data across multiple fibers). DeMux 306 block may demultiplex data across a subset of fibers to exclude fibers experiencing link failure to ensure data throughput. The exclusion of fiber links experiencing failure is controlled by the TC-Layer 305 block as part of the demultiplexing management function.

[0043] After DeMux 306 block, in one implementation, the transmit paths have analogous processing blocks. In an alternative implementation, independent signal processing is can be supported in each path. FIG. 3 shows two transmit paths, though more can be included. In a

transmit path, the transmit data is provided to the outer coder 307a, 307b block. In one implementation, outer coder 307a performs a Reed-Solomon coding. Other coding methods can be used. The outer coder 307a, 307b block provides data to the inner coder 308a, 308b block. In order to improve the energy per bit required to deliver the transmitting data, an inner coder 308a, 308b is used. Outer coder 307a, 307b may be used to support forward error correction (FEC) recovery of bit(s) errors. In one implementation, inner coder 308a, 308b implements a trellis coding method. Other coding methods may be used. Data from the inner coder 308a, 308b is provided to Modulation (MOD) 309a, 309b block. Alternatively, in some implementations, the outer coder 307a, 307b and inner coder 308a, 308b blocks are not used, and the output of the DeMux 306 block is provided directly to the MOD 309a, 309b block.

[0044] To increase the number of bits per symbol transmitted, m-ary modulation is performed in the MOD 309a, 309b block. In one implementation, an m-ary modulation method such as Quadrature Amplitude Modulation (QAM), 32-QAM, 256-QAM, Pulse Amplitude Modulation (PAM) or 5-PAM is used. Other m-ary modulation methods can be used. After processing by the MOD 309a, 309b block, the transmit data is converted to an analog signal by a Digital to Analog Converter (DAC) 310a, 310b. In one implementation, DAC 310a, 310b is configured to shape, condition or emphasize the signal for improved transmission performance. The DAC 310a, 310b passes the transmit data via electrical signals 311a, 311b to the laser driver (Driver) 312a, 312b as part of an implementation of TX 134 in an Optical Module 326. The driver 312a, 312b drives the Laser Diode (LD) 313a, 313b, which transmits light in response to transmit data signals received from the driver 312a, 312b. The light emitted from LD 313a, 313b is directed into the fibers 314a, 314b with the aid of a fiber optic interface (not shown). The fiber optic interface may include the necessary components (e.g., filters) to implement WDM or DWDM functions.

[0045] On the receive side of the transceiver 100 as part of an implementation of RX 133 in an Optical Module 326, light propagated across an ODN (not shown in FIG. 3) travels over fibers 314a, 314b through a fiber optic interface (not shown) and is received by the photo diode (PD) 315a, 315b. In response, the PD 315a, 315b provides a photocurrent to the TransImpedance Amplifier (TIA) 316a, 316b that converts the photocurrent into an electrical voltage signal. The electrical voltage signal from the TIA 316a, 316b is then transmitted to a Linear Amplifier (LA)

317a, 317b as a differential signal or a single-ended signal 318a, 318b. The LA 317a, 317b performs signal conditioning on the received electrical voltage signal to provide increased resolution and system performance. The LA 317a, 317b provides an electrical signal 319a, 319b to a Clock Data Recovery (CDR) 320a, 320b block that recovers clock and data signals, which are provided to an Analog to Digital Converter (ADC) 321a, 321b. The ADC 321a, 321b converts analog signals to digital signals, which are provided to an Equalization (EQ) 322a, 322b block. The EQ 322a, 322b block performs equalization on the received data, which is then provided to a De-Mod & Inner Decoder 323a, 323b. An Equalization 322a, 323b block may implement a blind equalization method or decision-directed equalization method. Blind equalization is discussed further below. Other equalization methods may be used. The De-Mod & Inner Decoder 323a, 323b block performs complementary de-modulation to the m-ary modulation performed in the MOD 309a, 309b block as well as a complementary decoding method to the coding method performed in the Inner Coder 308a, 308b block. In one implementation, De-Mod & Inner Decoder 323a, 323b includes a Viterbi decoder. Other decoding means may be used. Received data is then provided to the outer decoder 324a, 324b block, which performs a complementary decode to the error detection and/or recovery method chosen in the outer coder 307a, 307b block. After demodulation and decoding, the received data is then provided to the Mux 325 block that performs a complementary function to the DeMux 306 block. The combined received data is then provided to the TC-Layer 305. In implementations without Outer Coder 307a, 307b and Inner Coder 308a, 308b blocks, the output of the EQ 322a, 322b block is provided directly to the Mux 325 block.

[0046] The RX 133, 136 and TX 134, 135 circuitry of transceivers 100, 101, or portions thereof, for example, PD 315a, 315b and LA 317a, 317b, can be combined within industry standard optical modules. Common optical module standards are 300pin, XENPAK, X2, and XPAK transponders and XFP or SFP transceivers. These optical modules include unidirectional fiber links with one fiber link for transmit path and a second fiber link for the receive path. However, implementations of optical modules 326, 401, 501 incorporate a plurality of bi-directional fiber links for transmitting demultiplexed data on separate fiber links. Any of a variety of optical couplers may be used to separate and/or combine light propagating into or out of the fiber links. These optical modules 326, 401, 501 used herein can conform to a form factor

of standard optical modules such as the 300pin, XENPAK, X2, XPAK, XFP or SFP. Other form factors may also be used.

[0047] Alternatively, in other implementations of transceiver 100, functions described above may be integrated into various different components. For example, in the implementation of transceiver 100 shown in FIG. 4, various functions may be incorporated into optical module 401 such as: digital to analog conversion 310a, 310b; analog to digital conversion 321a, 321b; clock data recovery 320a, 320b; m-ary modulation 309a, 309b; m-ary de-modulation 323a, 323b; channel equalization 322a, 322b; inner coder 308a, 308b; inner de-coder 323a, 323b; outer coder 307a, 307b; outer de-coder 324a, 324b, and the De-Mux 306 and Mux 325 functions that enable demultiplexing across multiple fibers. The optical module 401 may have an interface that can connect to existing TC-Layer or MAC implementations currently produced. In another alternative implementation the digital to analog conversion 310a, 310b; analog to digital conversion 321a, 321b, and the clock data recovery 320a, 320b functions are incorporated into an optical module (not shown). In yet another alternative implementation of the transceiver 100 as shown in FIG. 5, an optical module 501 includes the De-Mux 306 and Mux 325 functions enabling demultiplexing across multiple fibers. The optical module 501 may have an interface that can connect to existing TC-Layer or MAC implementations currently produced.

[0048] An alternative implementation of transceiver 100 utilizing a single fiber link 314a (without demultiplexing across multiple fibers) is illustrated in FIG. 6. Alternatively, an implementation of the transceiver 100 may utilize multiple fiber links 314a, 314b while not performing demultiplexing across multiple fibers, as illustrated in FIG. 7. In this implementation, the TC-Layer 701 block manages the fiber links as independent fiber links that all connect to the same end point(s) on the network. In one implementation, TC-Layer 701 block is a derivative of the Transmission Convergence Layer specified in ITU G.984 or MAC specified in IEEE 802.3ah, with the added functionality of queue management of the traffic across the plurality of independent fiber links. The TC-Layer 701 block may exclude use of one or more fiber links if the fiber link experiences a failure. This exclusion of failed fiber links enables the TC-Layer 701 block (i.e., queue management function) to continue providing service across a PON using the remaining active links. Each fiber can be deployed across physically different paths to provide

optical fiber distribution path diversity and improved protection against failures. Failures may originate in the optical module or across elements of the ODN such as fiber or connector breaks.

[0049] **Channel Equalization**

[0050] An implementation for a channel equalization routine executed in the EQ 322a, 322b block includes determining coefficients or weights that are applied to the received data to remove undesired information or noise from the received data. Channel equalization can include a training or convergence period in which characteristics of the channel are learned or accounted for and coefficients or weights are adapted before processing the received data. Decision-directed equalization is an equalization method in which a known training sequence is sent during the training period and the receiver/transceiver uses the knowledge of the training sequence to learn about the channel characteristics. The training sequence can be multiplexed within a PON's TC-Layer framing protocol. Blind equalization is a process during which an unknown input data sequence is recovered from the output signal of an unknown channel (i.e., current equalization data for a given channel is unknown or otherwise unavailable).

[0051] One mode of communications used by a PON, e.g., for upstream data traffic (ONU/ONT to OLT direction), is "burst mode" communications. For example, upstream communications on a PON may include a link shared among multiple clients or ONUs/ONTs via time division multiplexing under control by an OLT. The upstream direction is divided into time slots; each time slot includes a defined number of bits. A given ONU/ONT is granted some number of time slots during which to transmit an upstream frame of data to an OLT. The upstream direction uses an orchestrated collection of bursts from the different ONU/ONTs, coordinated by the OLT that tries to maximize upstream traffic bandwidth efficiency by minimizing empty slots.

[0052] A flow chart for an exemplary upstream burst mode communication equalization process is shown in FIG. 8. To read or interpret the upstream data traffic from a client ONU/ONT, an OLT trains and/or equalizes the channel for that client ONU/ONT. Since the ONU/ONTs may be at different distances from the OLT and all do not share the same fiber, different channel characteristics result. Communication efficiencies may be obtained by determining 800 a set of equalization coefficients for a channel during a burst from a client,

saving 801 the determined equalization coefficients, entering a wait period 802 (also known as a PON's silence period when no client ONU/ONTs are transmitting upstream), and loading 803 the stored equalization coefficients before a next burst from the client (during the wait period), to avoid re-training or re-equalizing on every burst communication. The OLT has prior knowledge of which ONU/ONT will be transmitting data during which time slots and can use this knowledge during the time between burst communications (during the wait period) to load 803 an appropriate set of coefficients pertaining to the particular ONU/ONT transmitting prior to receiving 804 its next upstream burst. This process continues for subsequent bursts. In one implementation, periodic (though not coincident with each communication burst) updates to the channel characteristics may be made (and stored). The OLT can save 801 coefficients that have converged or have been trained after receiving burst communications from the first ONU/ONT and load 803 a new set of coefficients during the wait period between bursts (i.e., before an incoming upstream burst from a second ONU/ONT). In one implementation, in addition to or alternative to storage of coefficient data, the OLT may also save and load inner and/or outer coding states between bursts improving the efficiency of communication, similar to the equalization process of FIG. 8.

[0053] Another mode of communications used by a PON, e.g., for downstream data traffic (OLT to ONU/ONT direction), is "continuous mode" communications. In one implementation, a receiver, such as an ONU/ONT, equalizes a received data channel using either one of a blind equalization or a decision directed equalization method.

[0054] A flow chart for an exemplary PON activation process is shown in FIG. 9. In a PON in which a decision directed method is used for training an ONU/ONT receiver, a continuous mode transmitter, such as an OLT transmitter, sends a training sequence 900 multiplexed within a PON's TC-Layer downstream frame protocol. In a PON in which a blind equalization method is used, the OLT needed not send this training sequence 900. An ONU/ONT equalizes its received downstream channel 901 before it is able to receive and interpret PON network parameters 902. If the OLT has not been previously informed of the existence of the ONU/ONT then the ONU/ONT awaits an upstream grant window 903 available for new ONU/ONTs to respond to the OLT with its serial number 904. After the ONU/ONT has received an upstream grant window and processed PON system parameters, the ONU/ONT sends a

training sequence 905 and then its serial number 904 to the OLT. In a PON in which blind equalization is used the ONU/ONT need not send a training sequence 905. After the OLT has received the ONU/ONT serial number the OLT will assign and send the ONU/ONT an identification number. If the ONU/ONT does not receive an identification number 906a, the ONU/ONT returns to waiting for an upstream grant window for new ONU/ONTs 903. Once the ONU/ONT receives an identification number 906b, the OLT performs ranging 907 to determine the distance between the OLT and ONU/ONT and then compensates for the communication timing delays. The ONU/ONT can perform updates continuously or periodically depending on the equalization method employed. After the downstream continuous mode channel and the upstream burst mode channel have been equalized, both ends of the PON transmission link are equalized and the ONU/ONT enters its normal operating state 908.

[0055] **Link Connection Errors**

[0056] A system has been proposed that includes demultiplexing across multiple fibers as is shown above with reference to FIGS. 3-6. In systems using demultiplexing across multiple fibers, fibers can be connected incorrectly at installation. For example, a first transceiver 100, such as is shown in FIG. 3, with fibers 314a and 314b can be connected to a second transceiver 101 with fiber 314b connected in place of fiber 314a, and fiber 314a connected in place of fiber 314b. The incorrect connection in this example may cause the first and second transceivers to not establish communications due to misalignment of bits during multiplexing of received data.

[0057] Information in a frame is used to synchronize a receiver (e.g., transceiver 101) with the beginning of a frame (e.g., a "frame delimiter"). The process of discovering the beginning of a frame is called "frame synchronization." In specific protocols such as G.984, the downstream frame delimiter is called Psync, the upstream frame delimiter is called Delimiter and the process of frame synchronization in the downstream is called the HUNT. In one implementation, TC-Layer 305 block performs frame synchronization. In one implementation, specific bit patterns or values for frame delimiters are used that are unique for each fiber to differentiate one fiber from another or the order of fiber connections to correctly multiplex received data. The use of unique frame delimiters allows the TC-Layer 305 block to change the alignment of received data bits during multiplexing to adjust for the order of the fiber connections, without having to

physically change the connections. Management of the bit alignment in this implementation forms part of the TC-Layer's 305 block demultiplexing management responsibilities and functions.

[0058] Alternatively, the TC-Layer 305 block may assume an order for the fiber connections to determine the alignment of bits for multiplexing the received data and attempt frame synchronization. After a period of time with no frame synchronization success, the TC-Layer 305 block may assume a different order for the fiber connections and change the alignment of bits during multiplexing and attempt frame synchronization again. The process may repeat, including changing the alignment of bits to reflect other configurations during the multiplexing, and frame synchronization attempts continue until frame synchronization succeeds. In yet another alternative implementation, the TC-Layer 305 block may assume and attempt frame synchronization on all possible combinations of bit alignments in parallel, one of which will succeed in achieving frame synchronization.

[0059] Although the invention has been described in terms of particular implementations, one of ordinary skill in the art, in light of this teaching, can generate additional implementations and modifications without departing from the spirit of or exceeding the scope of the claimed invention. Accordingly, it is to be understood that the drawings and descriptions herein are proffered by way of example to facilitate comprehension of the invention and should not be construed to limit the scope thereof.

We claim:

Electronic Patent Application Fee Transmittal

Application Number:	
Filing Date:	
Title of Invention:	SYSTEM AND METHOD FOR PERFORMING HIGH-SPEED COMMUNICATIONS OVER FIBER OPTICAL NETWORKS
First Named Inventor/Applicant Name:	Alexander I. Soto
Filer:	James Albert Ward
Attorney Docket Number:	UBI-002B

Filed as Small Entity

Utility Filing Fees

Description	Fee Code	Quantity	Amount	Sub-Total in USD($)
Basic Filing:				
Utility filing Fee (Electronic filing)	4011	1	75	75
Utility Search Fee	2111	1	250	250
Utility Examination Fee	2311	1	100	100
Pages:				
Claims:				
Miscellaneous-Filing:				
Petition:				
Patent-Appeals-and-Interference:				

Description	Fee Code	Quantity	Amount	Sub-Total in USD($)
Post-Allowance-and-Post-Issuance:				
Extension-of-Time:				
Miscellaneous:				
			Total in USD ($)	**425**

Electronic Acknowledgement Receipt

EFS ID:	1929590
Application Number:	11772187
International Application Number:	
Confirmation Number:	9145
Title of Invention:	SYSTEM AND METHOD FOR PERFORMING HIGH-SPEED COMMUNICATIONS OVER FIBER OPTICAL NETWORKS
First Named Inventor/Applicant Name:	Alexander I. Soto
Customer Number:	50625
Filer:	James Albert Ward
Filer Authorized By:	
Attorney Docket Number:	UBI-002B
Receipt Date:	30-JUN-2007
Filing Date:	
Time Stamp:	18:56:45
Application Type:	Utility

Payment information:

Submitted with Payment	yes
Payment was successfully received in RAM	$425
RAM confirmation Number	4453
Deposit Account	

File Listing:

Document Number	Document Description	File Name	File Size(Bytes)	Multi Part /.zip	Pages (if appl.)

1	Application Data Sheet	ADS_UBI-002B_30jun07.pdf	1058121	no	5
Warnings:					
Information:					
2	Abstract	Abstract_UBI-002B_30Jun07.pdf	81626	no	1
Warnings:					
Information:					
3	Transmittal of New Application	Application_Transmittal_UBI-002B_30Jun07.pdf	238592	no	1
Warnings:					
Information:					
4	Claims	Claim_UBI-002B_30Jun07.pdf	81474	no	1
Warnings:					
Information:					
5	Drawings	Drawings_UBI-002B_30Jun07.pdf	430371	no	7
Warnings:					
Information:					
6	Oath or Declaration filed	Declaration_POA_Copy_UBI-002B_30Jun07.pdf	192717	no	4
Warnings:					
Information:					
7	Specification	Specification_UBI-002B_30Jun07.pdf	147163	no	19
Warnings:					
Information:					
8	Fee Worksheet (PTO-06)	fee-info.pdf	8420	no	2
Warnings:					
Information:					
		Total Files Size (in bytes):	2238484		

This Acknowledgement Receipt evidences receipt on the noted date by the USPTO of the indicated documents, characterized by the applicant, and including page counts, where applicable. It serves as evidence of receipt similar to a Post Card, as described in MPEP 503.

New Applications Under 35 U.S.C. 111
If a new application is being filed and the application includes the necessary components for a filing date (see 37 CFR 1.53(b)-(d) and MPEP 506), a Filing Receipt (37 CFR 1.54) will be issued in due course and the date shown on this Acknowledgement Receipt will establish the filing date of the application.

National Stage of an International Application under 35 U.S.C. 371
If a timely submission to enter the national stage of an international application is compliant with the conditions of 35 U.S.C. 371 and other applicable requirements a Form PCT/DO/EO/903 indicating acceptance of the application as a national stage submission under 35 U.S.C. 371 will be issued in addition to the Filing Receipt, in due course.

New International Application Filed with the USPTO as a Receiving Office
If a new international application is being filed and the international application includes the necessary components for an international filing date (see PCT Article 11 and MPEP 1810), a Notification of the International Application Number and of the International Filing Date (Form PCT/RO/105) will be issued in due course, subject to prescriptions concerning national security, and the date shown on this Acknowledgement Receipt will establish the international filing date of the application.

6/30/07

PTO/SB/06 (12-04)
Approved for use through 7/31/2006. OMB 0651-0032
U.S. Patent and Trademark Office; U.S. DEPARTMENT OF COMMERCE

Under the Paperwork Reduction Act of 1995, no persons are required to respond to a collection of information unless it displays a valid OMB control number.

PATENT APPLICATION FEE DETERMINATION RECORD

Substitute for Form PTO-875

11/772,187

APPLICATION AS FILED – PART I

FOR	(Column 1) NUMBER FILED	(Column 2) NUMBER EXTRA	SMALL ENTITY RATE ($)	SMALL ENTITY FEE ($)	OR	OTHER THAN SMALL ENTITY RATE ($)	OTHER THAN SMALL ENTITY FEE ($)
BASIC FEE (37 CFR 1.16(a), (b), or (c))				75			
SEARCH FEE (37 CFR 1.16(k), (i), or (m))				250			
EXAMINATION FEE (37 CFR 1.16(o), (p), or (q))				100			
TOTAL CLAIMS (37 CFR 1.16(i))	1 minus 20 =		X 25=		OR	X 50=	
INDEPENDENT CLAIMS (37 CFR 1.16(h))	1 minus 3 =		X 100=			X 200=	
APPLICATION SIZE FEE (37 CFR 1.16(s))	If the specification and drawings exceed 100 sheets of paper, the application size fee due is $250 ($125 for small entity) for each additional 50 sheets or fraction thereof. See 35 U.S.C. 41(a)(1)(G) and 37 CFR 1.16(s).						
MULTIPLE DEPENDENT CLAIM PRESENT (37 CFR 1.16(j))			N/A			N/A	
			TOTAL	425		TOTAL	

* If the difference in column 1 is less than zero, enter "0" in column 2.

APPLICATION AS AMENDED – PART II

AMENDMENT A

	(Column 1) CLAIMS REMAINING AFTER AMENDMENT		(Column 2) HIGHEST NUMBER PREVIOUSLY PAID FOR	(Column 3) PRESENT EXTRA	SMALL ENTITY RATE ($)	SMALL ENTITY ADDI-TIONAL FEE ($)	OR	OTHER THAN SMALL ENTITY RATE ($)	OTHER THAN SMALL ENTITY ADDI-TIONAL FEE ($)
Total (37 CFR 1.16(i))	*	Minus	**	=	x =		OR	x =	
Independent (37 CFR 1.16(h))	*	Minus	***	=	x =		OR	x =	
Application Size Fee (37 CFR 1.16(s))									
FIRST PRESENTATION OF MULTIPLE DEPENDENT CLAIM (37 CFR 1.16(j))					N/A		OR	N/A	
					TOTAL ADD'T FEE		OR	TOTAL ADD'T FEE	

AMENDMENT B

	(Column 1) CLAIMS REMAINING AFTER AMENDMENT		(Column 2) HIGHEST NUMBER PREVIOUSLY PAID FOR	(Column 3) PRESENT EXTRA	RATE ($)	ADDI-TIONAL FEE ($)	OR	RATE ($)	ADDI-TIONAL FEE ($)
Total (37 CFR 1.16(i))	*	Minus	**	=	x =		OR	x =	
Independent (37 CFR 1.16(h))	*	Minus	***	=	x =		OR	x =	
Application Size Fee (37 CFR 1.16(s))									
FIRST PRESENTATION OF MULTIPLE DEPENDENT CLAIM (37 CFR 1.16(j))					N/A		OR	N/A	
					TOTAL ADD'T FEE		OR	TOTAL ADD'T FEE	

* If the entry in column 1 is less than the entry in column 2, write "0" in column 3.
** If the "Highest Number Previously Paid For" IN THIS SPACE is less than 20, enter "20".
*** If the "Highest Number Previously Paid For" IN THIS SPACE is less than 3, enter "3".
The "Highest Number Previously Paid For" (Total or Independent) is the highest number found in the appropriate box in column 1.

This collection of information is required by 37 CFR 1.16. The information is required to obtain or retain a benefit by the public which is to file (and by the USPTO to process) an application. Confidentiality is governed by 35 U.S.C. 122 and 37 CFR 1.14. This collection is estimated to take 12 minutes to complete, including gathering, preparing, and submitting the completed application form to the USPTO. Time will vary depending upon the individual case. Any comments on the amount of time you require to complete this form and/or suggestions for reducing this burden, should be sent to the Chief Information Officer, U.S. Patent and Trademark Office, U.S. Department of Commerce, P.O. Box 1450, Alexandria, VA 22313-1450. DO NOT SEND FEES OR COMPLETED FORMS TO THIS ADDRESS. **SEND TO: Commissioner for Patents, P.O. Box 1450, Alexandria, VA 22313-1450.**