United States Patent [19]

Shoji et al.

[11] **Patent Number: 4,635,771**

[45] **Date of Patent: Jan. 13, 1987**

[54] **ONE-WAY CLUTCH BEARING**

[75] Inventors: **Masao Shoji**, Fujisawa; **Mikio Uchida**, Yamato; **Noboru Kitamura**, Fujisawa, all of Japan

[73] Assignee: **NSK-Warner K. K.**, Tokyo, Japan

[21] Appl. No.: **689,949**

[22] Filed: **Jan. 9, 1985**

[30] **Foreign Application Priority Data**

Jan. 21, 1984 [JP] Japan 59-9091

[51] **Int. Cl.**[4] **F16D 15/00**

[52] **U.S. Cl.** ..... **192/41 A**; 192/56 R; 192/45.1

[58] **Field of Search** ..... 192/56 R, 41 A, 45, 192/45.1; 188/82.8

[56] **References Cited**

U.S. PATENT DOCUMENTS

2,824,636	2/1958	Troendly et al.	192/45.1
3,019,873	2/1962	Ferris et al.	192/45.1
3,204,430	9/1965	Smirl .	
3,819,019	6/1974	Timtner	192/41 A
3,978,949	9/1976	Timtner	192/41
3,978,950	9/1976	Timtner	192/41

Primary Examiner—Rodney H. Bonck
Assistant Examiner—Alan G. Towner
Attorney, Agent, or Firm—Shapiro and Shapiro

[57] **ABSTRACT**

In a one-way clutch bearing having an outer race having an annular inner surface, an inner race having an annular outer surface corresponding to and concentric with the inner surface, and rolling members disposed in an annular space formed between the inner surface and the outer surface, whereby relative rotation of the inner and outer races in one direction is prevented by displacement of the rolling members in the space and a torque is transmitted, holding means for holding the rolling members is provided at a displacement position whereat the rolling members transmit a predetermined transmission torque, and means is provided for decreasing a wedge angle (an angle defined by a line extending from the center of the inner race to the point of contact between the rolling member and the inner race and a line passing through the points of contact between the rolling member and the inner and outer races) at a position before the rolling members arrive at the displacement position.

4 Claims, 9 Drawing Figures

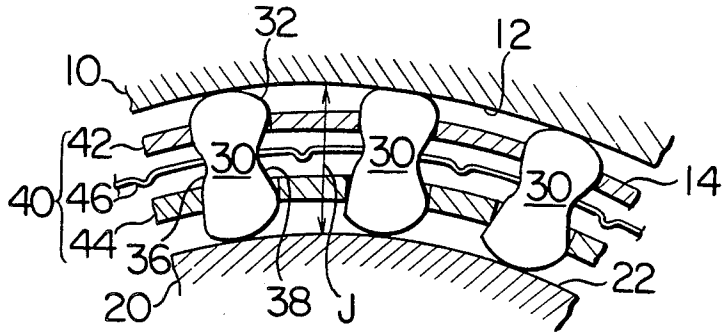

FIG. 1

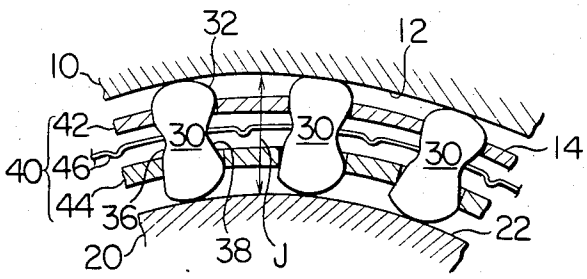

FIG. 2

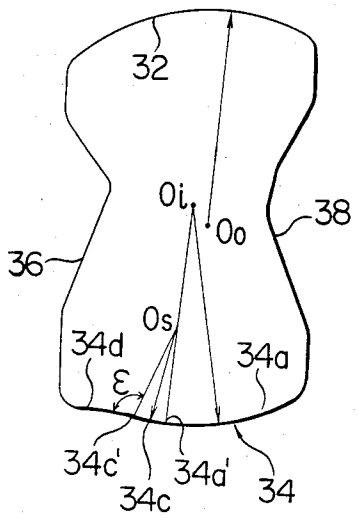

FIG. 3

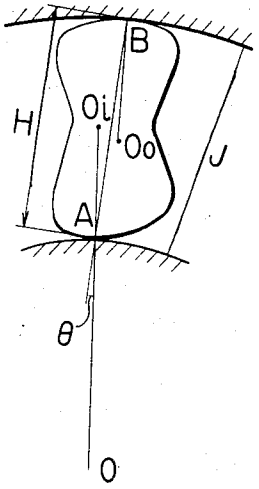

FIG. 4

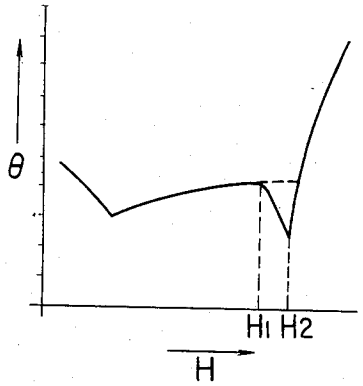

FIG. 5

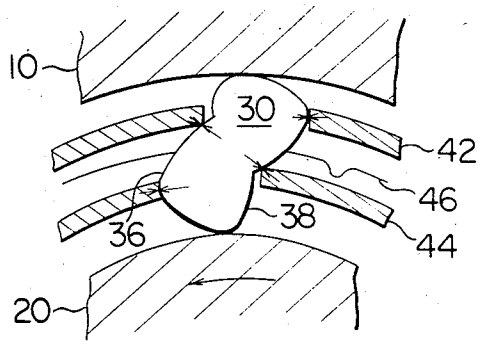

FIG. 6

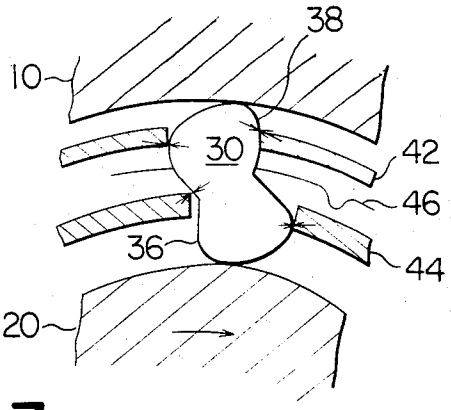

FIG. 7

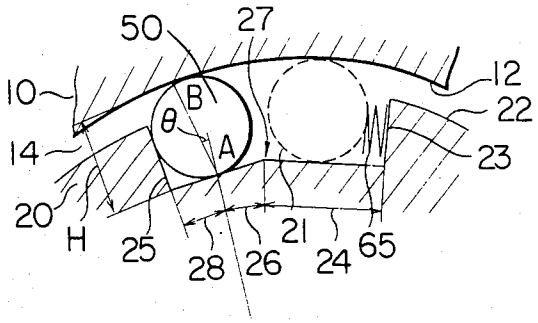

FIG. 8

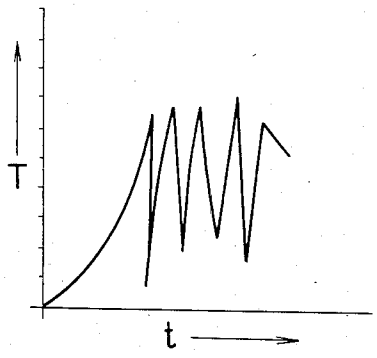

FIG. 9

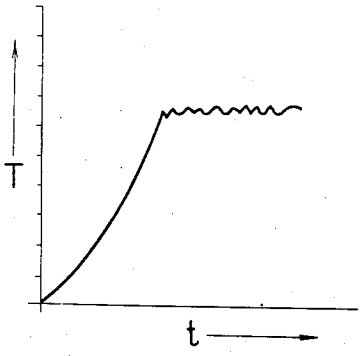

ONE-WAY CLUTCH BEARING

BACKGROUND OF THE INVENTION

1. Field of the Invention

This invention relates to improvements in a one-way clutch bearing.

2. Description of the Prior Art

Two types of one-way clutch bearing, i.e., the sprag type and the roller type, are known.

The sprag type one-way clutch bearing is comprised of an outer race having an annular inner surface, an inner race having an outer surface corresponding to and concentric with the inner surface, and a plurality of sprags disposed in an annular space formed between the inner and outer surfaces. When the inner race rotates in one direction, the upper and lower cam surfaces of the sprags become inclined to a position in which they do not transmit a torque, and permit relative rotation of the inner race and the outer race. On the other hand, when the inner race is about to rotate in the other direction, the cam surfaces of the sprags move and the sprags are inverted to prevent relative rotation of the inner and outer races, whereby a torque is transmitted from the inner race to the outer race.

On the other hand, the roller type one-way clutch bearing has a construction in which rollers are contained in roller containing grooves formed in one of an inner race and an outer race and are biased by springs in such a direction that the clearance between the bottom surface and the circumferential surface of the grooves becomes narrow. When one of the inner race and the outer race is driven in a certain direction, it rotates idly, and when one of the inner race and the outer race is driven in the other direction, the rollers roll in the roller containing grooves and bite between the bottom surface and the circumferential surface of the grooves to prevent relative rotation of the inner race and the outer race, whereby a torque is transmitted.

The above-described conventional one-way clutch bearings maintain a long life as long as they are used under a load torque of a predetermined value or less, but if an accidental excessive torque is imparted thereto, the sprags or the rollers may go beyond a predetermined torque transmitting position and further push into the inner and outer races, thereby leaving impressions on the surface of the sprags or the rollers which is in contact with the inner and outer races, or breaking the sprags or the rollers. Also, in such a case, the rollers may jump out toward the non-torque-transmitting side, i.e., the side of the springs which bias the rollers, thereby damaging the springs.

To eliminate such inconveniences, one might provide, in the case of the sprag type, a planar portion at a location beyond the cam surface which transmits a predetermined torque, and in the case of the roller type, to hold the rollers at an allowed maximum torque transmitting position by holding means, thereby causing the sprags or the rollers to slide when an excessive torque is imparted. However, when an excessive torque is imparted to a one-way clutch bearing actually using the above-described sprags or rollers, the slight movement of the posture of the sprags or rollers when they have begun to slide appears in the form of a variation in transmission torque and the sprags or rollers jump and cannot slide stably.

SUMMARY OF THE INVENTION

It is an object of the present invention to provide a one-way clutch bearing which permits the sprags or rollers to slide stably when an excessive torque is imparted and which has a long life.

The present invention achieves the above object by a one-way clutch bearing having an outer race having an annular inner surface, an inner race having an annular outer surface corresponding to and concentric with said inner surface, and rolling members disposed in an annular space formed between said inner surface and said outer surface, whereby relative rotation of said inner and outer races in one direction is prevented by displacement of said rolling members in said space and a torque is transmitted, characterized in that holding means for holding said rolling member is provided at a displacement position whereat said rolling members transmit a predetermined transmission torque, and in that a section in which a wedge angle (an angle defined by a line extending from the center of said inner race to the point of contact between said rolling member and said inner race and a line passing through the points of contact between said rolling member and said inner and outer races) decreases is provided at a location before said rolling members arrive at said displacement position.

BRIEF DESCRIPTION OF THE DRAWINGS

FIG. **1** is a cross-sectional front view showing an embodiment of the sprag type one-way clutch bearing according to the present invention.

FIG. **2** is an enlarged front view of the sprag of FIG. **1**.

FIG. **3** is a fragmentary front view of the sprag of FIG. **1** for showing the sprag height and wedge angle.

FIG. **4** is a graph showing the relation between the sprag height and the wedge angle when the sprag shown in FIG. **2** is used.

FIG. **5** is a cross-sectional front view showing the relative position of the sprag and holding means of the one-way clutch bearing during idle rotation of the inner race.

FIG. **6** is a cross-sectional front view of the one-way clutch bearing when the sprag is in its sliding state.

FIG. **7** is a cross-sectional front view showing an embodiment in which the present invention is applied to a roller type one-way clutch bearing.

FIG. **8** is a graph showing the result of the torsion test of a one-way clutch bearing having the relation of the broken line indicated in FIG. **4**.

FIG. **9** is a graph showing the result of the torsion test of the one-way clutch bearing according to the present invention.

DESCRIPTION OF THE PREFERRED EMBODIMENTS

Some embodiments of the present invention will hereinafter be described by reference to the drawings.

FIGS. **1** and **2** show an embodiment of the spray type one-way clutch bearing according to the present invention. This one-way clutch bearing is comprised of an annular outer race **10**, an annular inner race **20** disposed inside the outer race **10** concentrically therewith, a number of sprays **30** disposed between the outer race and the inner race, and holding means **40** for holding the sprags **30**.

The annular outer race **10** has an annular inner surface **12**. On the other hand, the annular inner race **20** has an annular outer surface **22** opposed to the inner surface **12** of the outer race **10**. In the present embodiment, the inner race **20** is a torque-transmitting member engaged with a drive shaft, not shown, and rotatable with the drive shaft to transmit a torque, and the outer race **10** is a driven member to which the torque is transmitted by the rotation of the inner race **20** only in one direction (the clockwise direction as viewed in FIG. **1**). It is also possible to use the outer race **10** as a torque-transmitting member and the inner race **20** as a driven member conversely to the present embodiment.

A number of sprags **30** are arranged circumferentially in an annular space **14** formed between the inner surface **12** of the outer race **10** and the outer surface **22** of the inner race **20**. Each sprag **30** is gourd-shaped and side surfaces **36** and **38** thereof connected to cam surfaces **32** and **34** which bear against the inner surface **12** and the outer surface **22**, respectively, have recesses in the central portions thereof and are held by holding means **40** which will later be described.

The cam surface **32**, as shown in FIG. **2**, is formed by a curved surface centered at O_o and having a single predetermined curvature. On the other hand, the cam surface **34** is formed by a curved surface **34*a*** centered at a center O_i different from the center O_o and having a predetermined curvature, a surface **34*c*** continuous to the curved surface **34*a***, and a flat surface **34*d*** continuous to the surface **34*c***. The center O_o is eccentric in the direction of rotation of the outer race **10** (right as viewed in FIG. **2**) and the center O_i is eccentric in the opposite direction (left as viewed in FIG. **2**). The centers O_o and O_i and the curvatures of the cam surfaces **32** and **34*a*** are determined by the relation between the magnitude of the transmitted torque and the distance J of the space **14** between the inner race **20** and the outer race **10**, and this is a well-known technique.

The point of inflection **34*a*'** on the cam surface **34** from the curved surface **34*a*** to the surface **34*c*** is determined by the maximum transmitted torque.

A method of setting this point of inflection **34*a*'** to the flat surface **34*d*** will hereinafter be described by reference to FIGS. **2** to **5**.

In FIG. **3**, the distance between the point of contact A between the inner race **20** and the sprag **30** and the point of contact B between the outer race **10** and the sprag **30** is the spray height H. On the other hand, the angle defined by a line passing through the point of contact A and extending outwardly from the center of rotation O of the inner race **20** and the outer race **10** and a line passing through the points of contact A and B is a wedge angle θ.

In the case of the sprag shape shown in FIG. **2**, the relation between the sprag height H and the wedge angle θ is such that as shown in FIG. **4**, as the sprag **30** rotates from the non-torque-transmitting portion of the cam surface **34** (i.e., the right end of the curved surface **34*a***) toward the torque-transmitting portion (i.e., in the counter-clockwise direction), the wedge angle θ decreases once and thereafter gradually increases and decreases over the section from the sprag height H_1 to the sprag height H_2 and again sharply increases from a point beyond the sprag height H_2. That is, the surface **34*c*** is provided so that when a point on the cam surface **34** which provides the sprag height H_1 transmitting the maximum torque is **34*a*'** and this point **34*a*'** is the point of inflection, the wedge angle θ decreases over the section to the sprag height H_2. In the present embodiment, this surface **34*c*** is formed by a curved surface having a curvature smaller than that of the curved surface **34*a***, but it may be a curved surface having a curvature greater than that of the curved surface **34*a*** if it is of such a shape that the wedge angle θ decreases. In FIG. **4**, the relation between the sprag height and the wedge angle when the surface **34*c*** is not provided is indicated by a broken curve.

A point **34*c*'** at which the surface **34*c*** terminates corresponds to the point which provides the sprag height H_2, and the flat surface **34*d*** begins from this point **34*c*'**. The flat surface **34*d*** is formed so that the angle ϵ forming the line passing through a center O_s and the point **34*c*'** intersects at an angle greater than 90° (preferably 97°).

The holding means **40** for the sprags **30** is disposed in the annular space **14** between the outer race **10** and the inner race **20**, as shown in FIG. **1**. The holding means **40** is comprised of an annular first holding member **42** disposed inside the outer race **10**, and annular second holding member **44** disposed adjacent to the inner race **20**, and an annular biasing spring **46** disposed between the first and second holding members. Rectangular holes are formed at equal intervals in the peripheries of the first holding member **42**, the second holding member **44** and the biasing spring **46**, respectively, so that sprags **30** are held in these holes. The biasing spring **46** biases the vicinity of the bottoms of the recesses provided in the side surfaces **36** and **38** of each sprag **30** so as to provide a moment in the torque-transmitting direction (the counter-clockwise direction as viewed in FIG. **1**) during the stoppage and the idle rotation of the inner race **20**.

In the present embodiment, the holding means **40** is comprised of the first holding member **42** and the second holding member **44**, but in another embodiment the holding means may be comprised of one of the first and second holding members **42** and **44**, or a single holding member may be provided adjacent to the recesses of the side surfaces **36** and **38** of the sprags **30**.

Operation of the sprag type one-way clutch bearing having the above-described construction will now be described.

Each constituent part is in the position of FIG. **1** when the inner race **20** is stopped. In FIG. **1**, when the inner race **20** rotates in the counter-clockwise direction, the sprags **30** turn clockwise, whereafter as shown in FIG. **5**, the side surfaces **36** and **38** of the sprags **30** bear against the first holding member **42** and the second holding member **44** and are held in that position. The sprag height H in this position is set so as to be smaller than the height J (see FIG. **3**) of the annular space between the inner race **20** and the outer race **20** and thus, the inner race **20** rotates relative to the outer race **10**, that is, rotates idly.

On the other hand, when the inner race **20** rotates clockwise, the sprags **30** turn counter-clockwise and the sprag height H of the cam surface **34*a*** increases so that the sprags **30** mesh with the inner race **20** and the outer race **10**. In this state, the outer race **10** rotates with the inner race **20** and thus, a torque is transmitted from the inner race **20** to the outer race **10**.

However, when the inner race **20** is about to be rotated clockwise by a torque of a predetermined value or more, the sprags **30** further turn counter-clockwise from the normal torque transmitting position and the cam surface **34** goes beyond a point **34*a*'** which provides

the sprag height H_1 of the curved surface **34a**, and the surface **34c** and finally two points on the flat surface **34d** or the flat surface **34d** and the curved surface **34a** or the surface **34c** come to bear against the outer surface **22** of the inner race **20**. At this time, the first holding member **42** and the second holding member **44** hold the side surfaces **36** and **38** of the sprags **30** as shown in FIG. **6** and therefore, the sprags **30** are stably held in this position. In this position (the displaced position), the sprags **30** may stably transmit a predetermined transmission torque for the rotation of the inner race **20** and may slide for a torque of a predetermined value or more.

In the above-described embodiment, the flat portion is set to the cam surface of each sprag which bears against the inner race, but alternatively, this flat portion may be set to the cam surface of each sprag which bears against the outer race, or may be set to both of these cam surfaces.

An embodiment in which the present invention is applied to a roller type one-way clutch bearing will now be described by reference to FIG. **7**.

The one-way clutch bearing shown in FIG. **7** is comprised of an annular outer race **10**, an annular inner race **20** disposed inside the outer race **10** concentrically therewith, rollers **50** disposed in grooves **21** formed in the outer periphery of the inner race **20**, and a spring **65** for biasing each roller **50** in a meshing direction.

The annular outer race **10** has an annular inner surface **12**. On the other hand, the annular inner race **20** has an annular outer surface **22** opposed to the inner surface **12** of the outer race **10**, and a plurality of grooves **21** are formed in the periphery of the outer surface **22** and a roller **50** is contained in each of the grooves **21**. Each groove **21** comprises a front wall **23**, a rear wall **25**, bottom surfaces **24**, **26** and **28** and side walls, not shown.

The shape of each groove **21** is such that the relation between the distance H between the points of contact A and B between the outer race **10**, the inner race **20** and each roller **50** and a wedge angle θ formed by a line passing through these points of contact A and B and a line passing through the center O of the outer race **10** and the inner race **20** provides the relation of FIG. **4**. The shape of the groove **21** to the point H_1 in FIG. **4** is heretofore known, but in the present invention, each roller **50** is adapted to transmit a predetermined maximum torque at the distance H_1 between the points of contact A and B, and this distance H_1 is provided when the roller **50** passes the point of inflection **27** on the bottom surfaces **24** and **26**. The bottom surfaces **24** and **26** are formed by curved or flat surfaces which provide the curves to the distance H_1 of FIG. **4** and from H_1 to H_2. The rear wall **25** is provided at a position whereat the distance between the points of contact A and B between the roller **50** and the inner and outer races is H_2. The bottom surface **28** of the groove is an extension from the bottom surface **26** to the rear wall **25**.

A spring **65** for biasing each roller **50** in a direction to mesh with the inner and outer races (the leftward direction as viewed in FIG. **7**) is disposed between the front wall **23** and the roller **50**.

In the roller type one-way clutch bearing of the above-described construction, when the inner race **20** rotates counter-clockwise as viewed in FIG. **7**, the roller **50** rolls toward the front wall **23** and therefore, no torque is transmitted. On the other hand, when the inner race **20** rotates clockwise as viewed in FIG. **7**, the roller **50** rolls in a predetermined direction and is engaged between the inner and outer races, so that a torque is transmitted. When the inner race **20** is about to be driven by a greater torque, the roller **20** goes beyond the point of inflection **27** on the bottom surface at which the distance between the points of contact A and B between the roller and the inner and outer races is H_1, and enters the area of the bottom surface **26**. The roller **50** moves on the bottom surface **26** and at last arrives at the rear wall **25**, and begins to slide at this point.

In the above-described embodiment, the grooves **21** for containing the rollers **50** therein are formed in the inner race **20**, but alternatively, these grooves **21** may be formed in the outer race **10**. Further, the driving race may be the outer race **10** instead of the inner race **20**. Also, if use is made of a holder for holding the roller **50** when the roller **50** has arrived at the rear wall **25**, the roller **50** will slide more stably.

According to the present invention, as described above, there is provided a one-way clutch bearing of such a structure that the sprags or the rollers can slide stably when they are subjected to an excessive torque of a predetermined value or more. In the present invention, as shown in FIG. **4**, the relation between the wedge angle and the sprag height or the distance between the points of contact between each roller and the inner and outer race is rendered such as indicated by a solid line (so that the wedge angle is decreased by providing the surface **34c** or the bottom surface **26**) rather than such as indicated by a broken line (in the case of the sprags type, the surface **34c** of FIG. **2** is not provided so that the surface changes from the curved surface **34a** to the flat surface **34d**, and in the case of the roller type, the point of inflection **27** of FIG. **7** is not provided but the bottom surface **24** is extended), whereby the sprags or the rollers can slide in a stable posture. The results obtained when a one-way clutch bearing having the relation indicated by the broken line of FIG. **4** and the one-way clutch bearing of the present invention (having the relation indicated by the solid line of FIG. **4**) were actually subjected to a torsion test (a test for imparting an excessive torque to the drive shaft and examining the time variation in the torque transmitted to the driven race side) are shown in FIGS. **8** and **9**, respectively. It can be seen that in the one-way clutch bearing of FIG. **8**, the sprags or the rollers do not slide smoothly and the transmission torque fluctuates greatly, while in the one-way clutch bearing of the present invention shown in FIG. **9**, the transmission torque is stable and the sprags or the rollers slide in a stable posture. Thus, in the one-way clutch bearing of the present invention, the sprags or the rollers slide stably and therefore, the sprags, the rollers, the inner race and the outer race are not destroyed or damaged and have a long life.

We claim:

1. A one-way clutch bearing having an outer race having an annular inner surface, an inner race having an annular outer surface corresponding to and concentric with said inner surface, and rolling members disposed in an annular space formed between said inner surface and said outer surface, said rolling members being displaceable within said space into engagement between said inner surface and said outer surface to prevent relative rotation of said inner and outer races in one direction and transmit a torque between said inner and outer races, characterized by holding means including a holding member for holding said rolling members at a displacement position at which said rolling members transmit a predetermined transmission torque, means for

decreasing a wedge angle defined by a line extending from the center of said inner race to the point of contact between said rolling member and said inner race and a line passing through the points of contact between said rolling member and said inner and outer races before said rolling members arrive at said displacement position, and means for increasing the wedge angle after said wedge angle has been decreased by said means for decreasing the wedge angle.

2. A one-way clutch bearing according to claim 1, characterized in that said means for increasing the wedge angle comprises a flat surface.

3. A one-way clutch device comprising:

inner and outer races defining an annular space therebetween;

a plurality of sprags disposed in said annular space and tiltable into wedge engagement with said races in one rotational direction of the races to transmit a torque from one to the other of said races, and tiltable out of wedge engagement for slipping on the races in the other rotational direction of the races so as not to transmit a torque, each said sprag having inner and outer contact surfaces contacting said inner and outer races, respectively, during wedge engagement of the sprag with said inner and outer races, at least one of said inner and outer contact surface having a flat face at an end of a torque transmission side thereof, said flat face being brought into wedge-contact with the corresponding race when an input torque from said one of said races exceeds a predetermined value; and

holding means including at least one holding member for holding said sprags such that said holding member contacts the front and rear sides of said sprags with respect to the rotational direction of said races when the input torque exceeds said predetermined value, with said sprags being held in positions such as to be slidable smoothly on the races while transmitting the torque of said predetermined value.

4. A one-way clutch device according to claim 3, wherein said holding means comprises two holding members which contact the front and the rear sides of said sprags with respect to the rotational direction of said races when the input torque exceeds said predetermined value and which hold said sprags in said positions.

* * * * *