US005709632A

United States Patent [19]

Socwell

[11] **Patent Number: 5,709,632**

[45] **Date of Patent: Jan. 20, 1998**

[54] **CURVED DECK TREADMILL**

[75] Inventor: **Jeff D. Socwell**, Logan, Utah

[73] Assignee: **Precor Incorporated**, Bothell, Wash.

[21] Appl. No.: **721,724**

[22] Filed: **Sep. 27, 1996**

[51] **Int. Cl.**[6] **A63B 22/02**

[52] **U.S. Cl.** **482/54**; 482/51

[58] **Field of Search** 482/51, 54, 70, 482/71

[56] **References Cited**

U.S. PATENT DOCUMENTS

1,211,765	1/1917	Schmidt .	
3,554,541	1/1971	Seaman .	
3,642,279	2/1972	Cutter .	
4,389,047	6/1983	Hall .	
4,616,822	10/1986	Trulaske et al.	482/54
4,938,473	7/1990	Lee et al. .	
5,100,127	3/1992	Melnick et al.	482/54
5,125,361	6/1992	Rowlands .	
5,391,129	2/1995	Zaitsev .	
5,431,612	7/1995	Holden	482/54
5,575,740	11/1996	Piaget et al.	482/51

Primary Examiner—L. Reichard

Attorney, Agent, or Firm—Christensen O'Connor Johnson & Kindness PLLC

[57] **ABSTRACT**

A curved deck treadmill is disclosed in one presently preferred embodiment of the present invention as comprising a support frame comprising a first side and a second opposing side having a deck supportably disposed therebetween. In preferred design, the deck comprises a first end, a second end, and an intermediate portion disposed between the first and second ends. The intermediate portion of the deck is preferably formed having a substantially arcuate configuration such that a significant portion of the intermediate portion may be operably disposed dimensionally lower in longitudinal relation to the first and second ends of the deck. Further, a roller assembly is provided preferably comprising a first and second roller. The first roller may be rotatably disposed contiguous the first end of the deck between the first side and the second side of the support frame. Correspondingly similar in construction and design, a second roller is preferably disposed contiguous the second end of the deck between the first and second sides of the support frame. In operation, an endless belt may be rotatably mounted in relation to the roller assembly and operatively disposed in relation to the deck, whereby providing a structurally supported arcuate shaped, moveable surface on which a user may exercise.

19 Claims, 5 Drawing Sheets

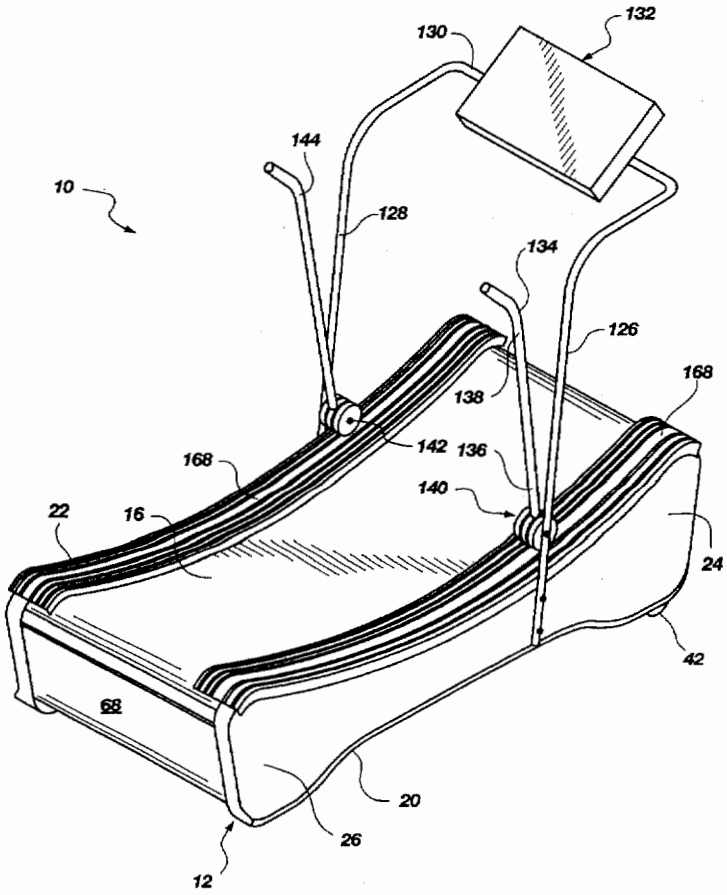

EX2004
Woodway USA, Inc.
IPR2023-00843

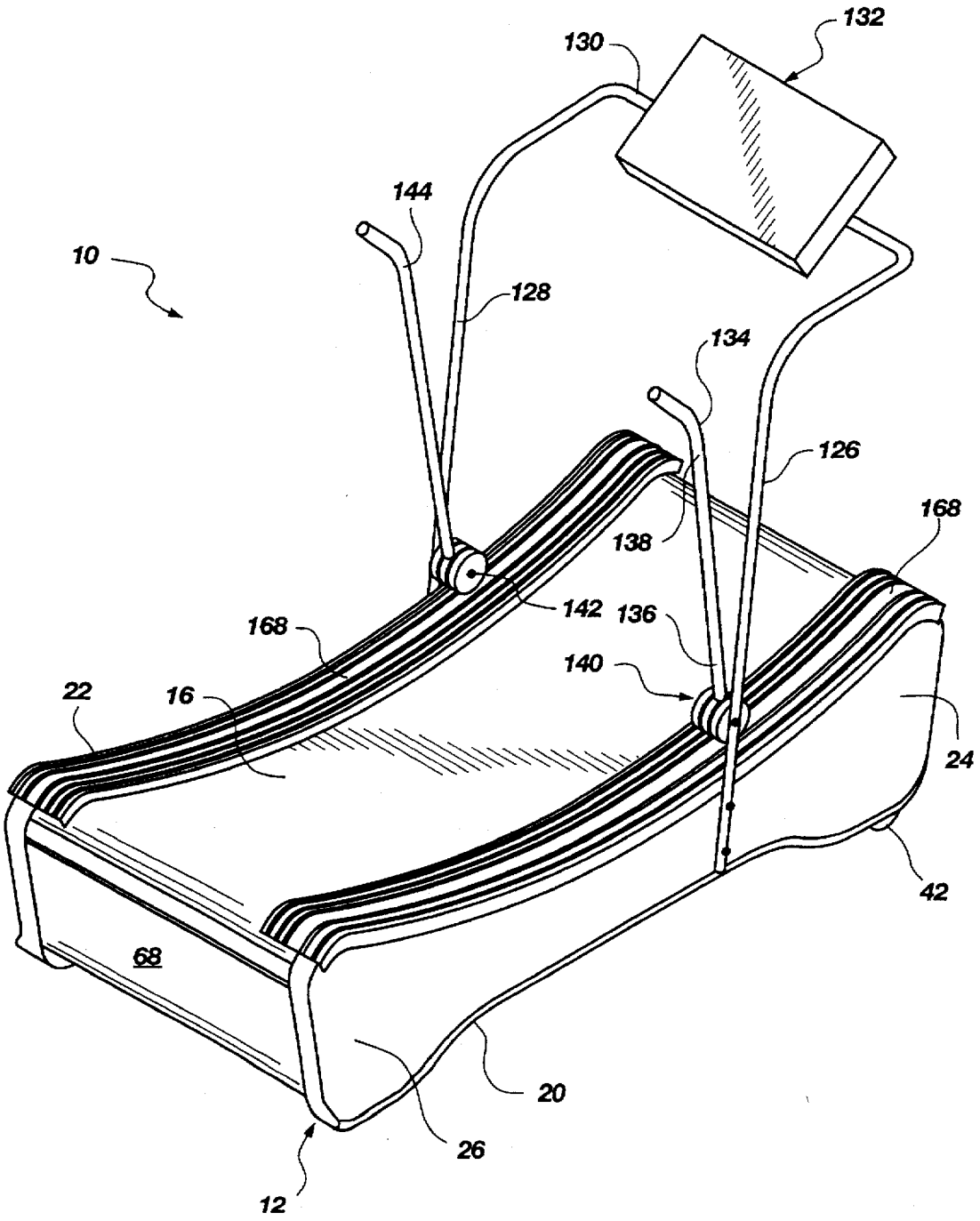

Fig. 1

EX2004
Woodway USA, Inc.
IPR2023-00843

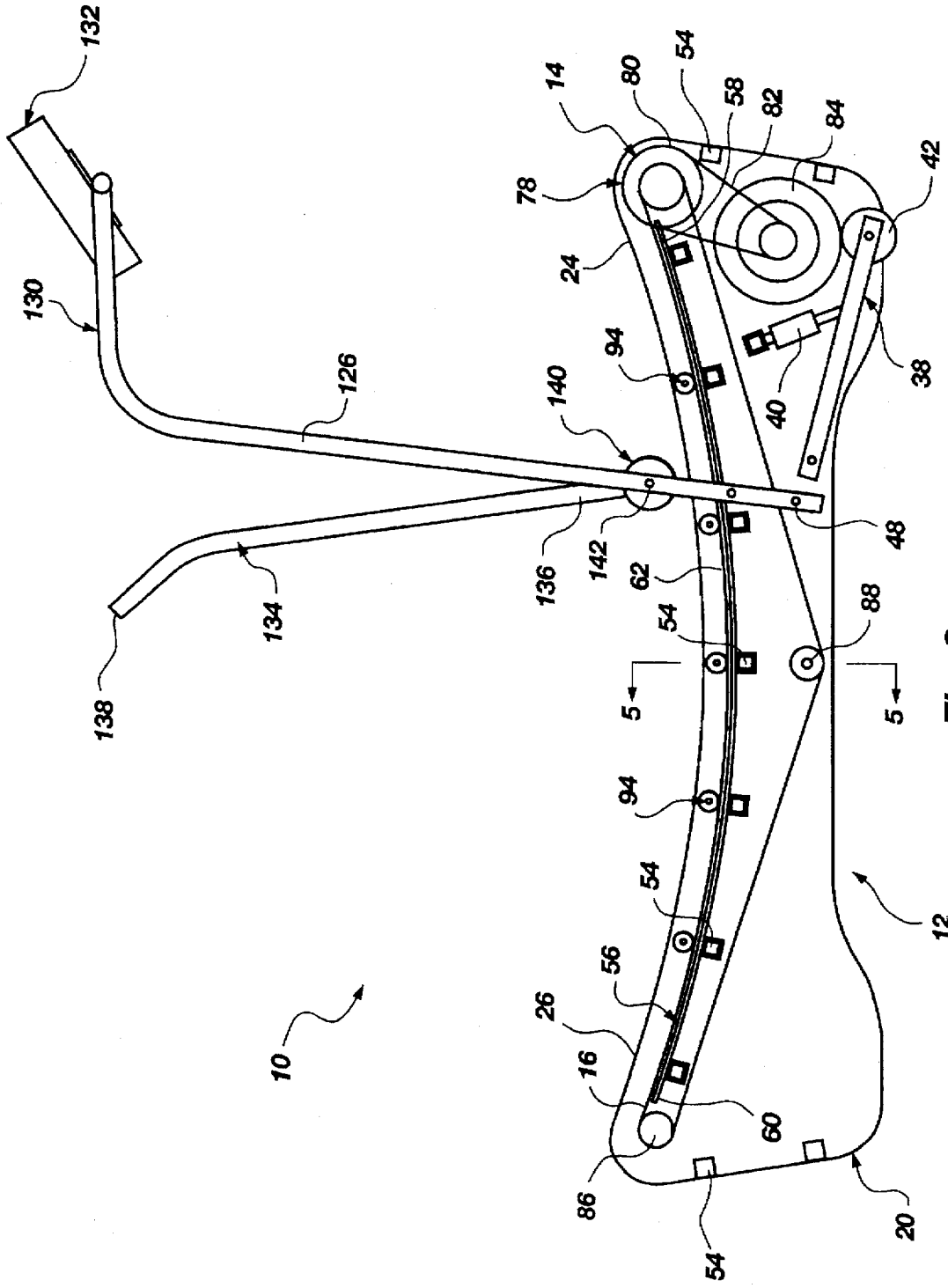

Fig. 2

EX2004
Woodway USA, Inc.
IPR2023-00843

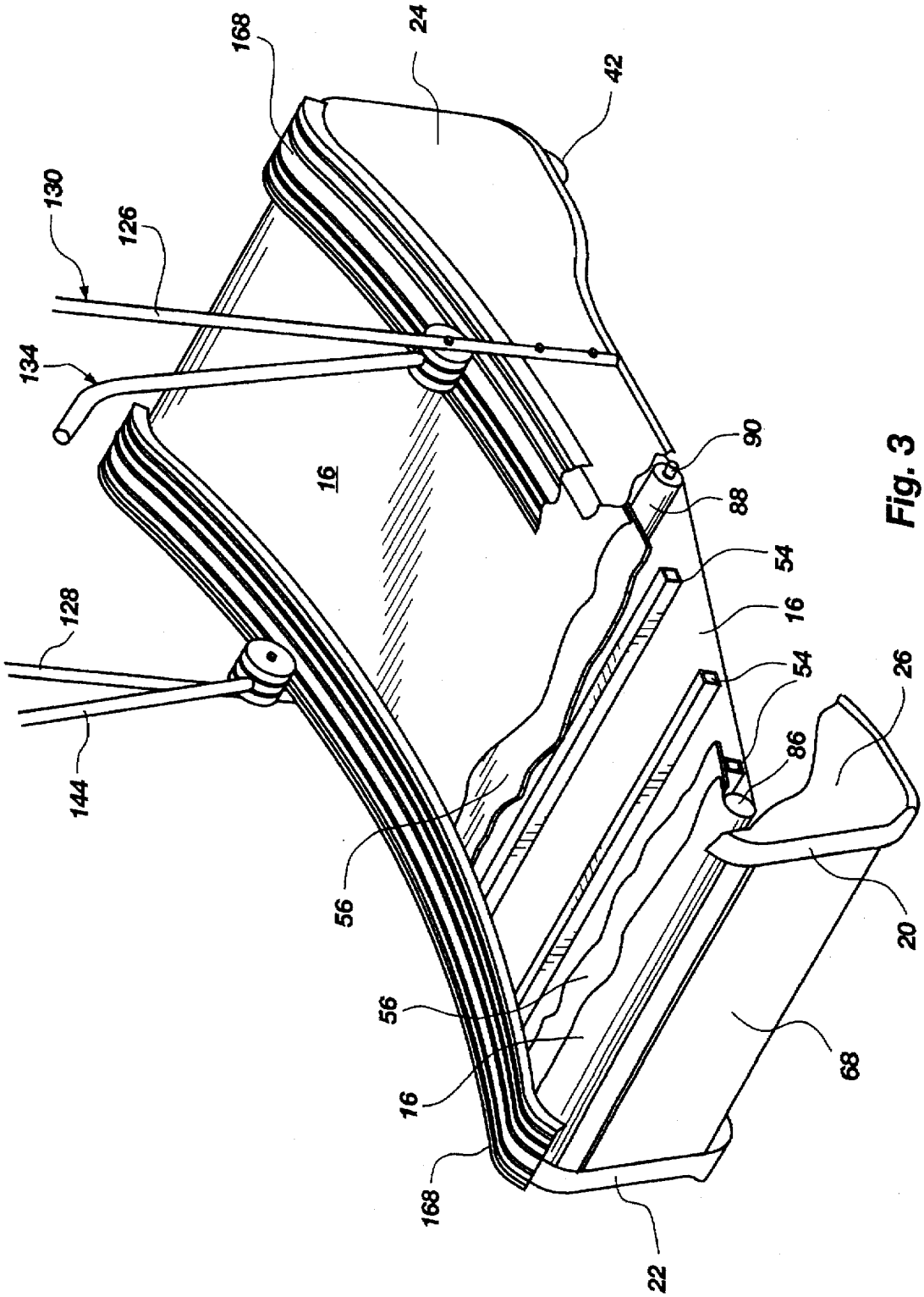

Fig. 3

EX2004
Woodway USA, Inc.
IPR2023-00843

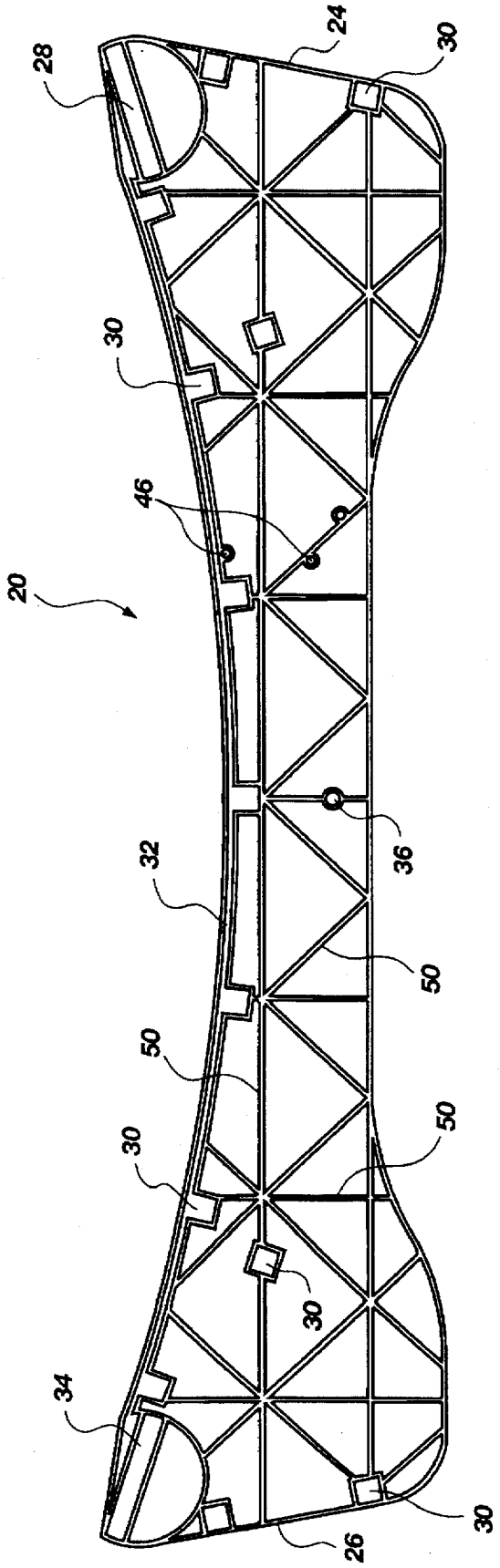

Fig. 4

EX2004
Woodway USA, Inc.
IPR2023-00843

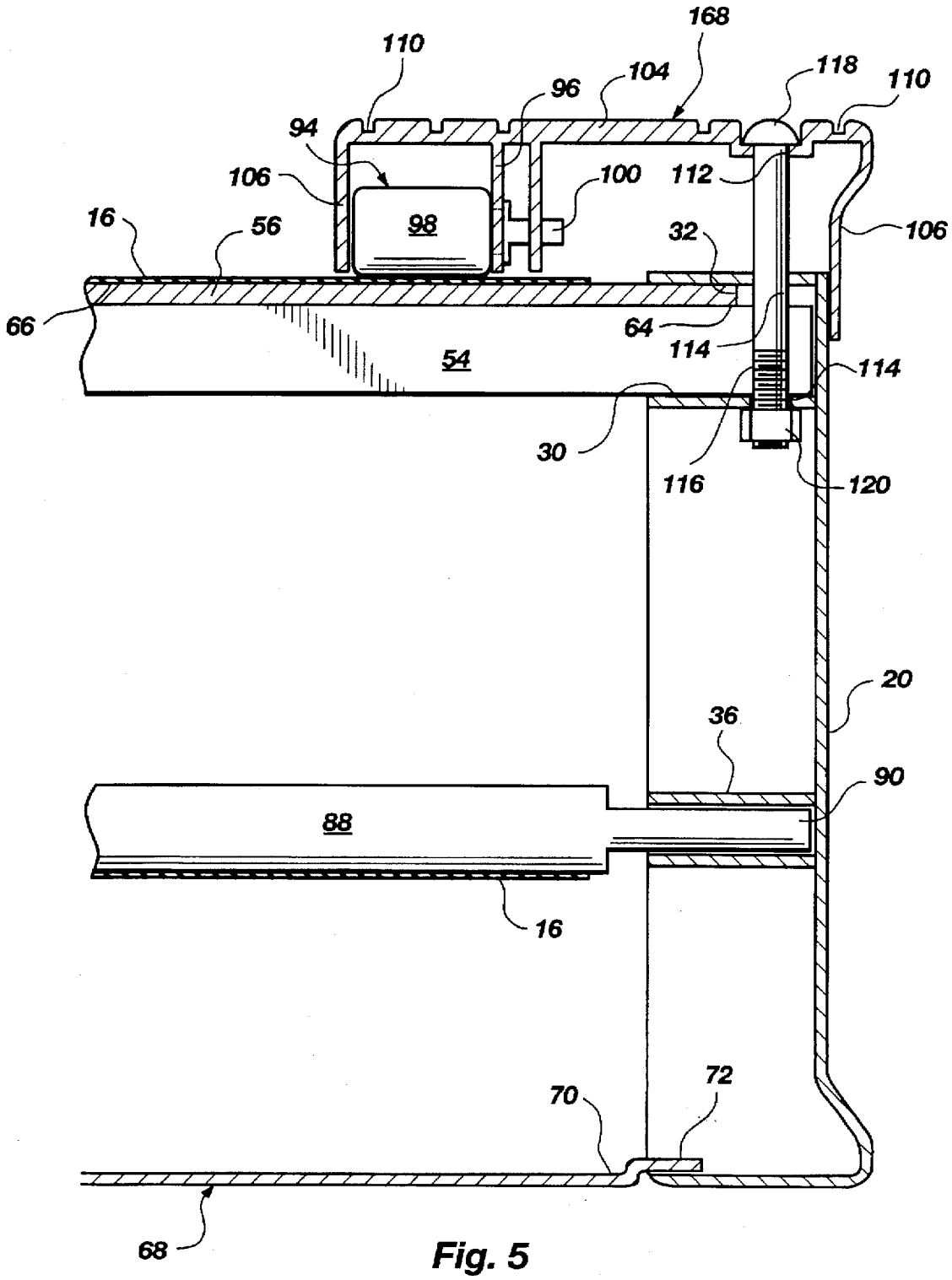

Fig. 5

EX2004
Woodway USA, Inc.
IPR2023-00843

CURVED DECK TREADMILL

BACKGROUND

1. The Field of the Invention

This invention relates to exercise treadmills and, more particularly, to novel systems and methods for providing a curved deck treadmill.

2. The Background Art

In an effort to generally improve one's health, many people regularly exercise on treadmills by walking, jogging and/or running along a rotating surface. Although exercise treadmills have been found to be useful, the exercise treadmills of the prior art incorporate several inherent disadvantages.

Traditionally, prior art exercise treadmills may be constructed comprising an endless belt rotatably disposed in relation to a plurality of anti-friction rollers which are rigidly secured to a frame. A significant disadvantage of prior art exercise treadmills of this general type may include the uncomfortable vibrating sensation and/or bruising which is commonly realized by a user when attempting to exercise thereon. In addition, if sufficient frictional resistance is not found in relation to the rotation of the free-moving rollers rotatably engaging the belt, a user attempting to exercise on the treadmill may suffer from injuries sustained as a result of an uncontrolled rotation of the anti-friction rollers engaging the belt. In particular, if the rollers supportably disposed in relation to the endless belt are so easily moveable, the user may potentially lose his equilibrium or balance and fall from the exercise treadmill resulting in possible injuries.

In an attempt to reduce the potential dangers associated with falling from prior art exercise treadmills comprising anti-frictional, free-moving rollers, those skilled in the art developed rollers providing frictional resistance in relation to the inherent rotation of the rollers and the belt. Prior art exercise treadmills having frictional resistance in relation to the rollers, however, are typically found to have a difficulty in maintaining a sufficient balance between too much resistance and not enough. If, for example, the rollers are incapable of storing sufficient kinetic energy to overcome the established frictional resistance, after the rollers of the treadmill begin to rotate, the belt supportably disposed in relation to the rollers generally will not have the tendency to continue in a rotational motion. In this regard, exercise treadmills of the prior art should generally balance these competing factors and provide a corresponding frictional resistance that accommodates a smooth, continuous movement of the belt, without encountering a series of stops or starts that may result in simultaneous jerking motions in the movement of the endless belt.

To address the foregoing problems associated with frictional resistant roller assemblies, those skilled in the art developed exercise treadmills having a motor disposed in relation to the rollers to provide a means for regulating a constant rotational speed of the rotating endless belt. As realized, prior art exercise treadmills incorporating a motor for driving the rotational speed of the rollers and belt commonly obviate the requirement to balance the resistance and stored kinetic energy customarily needed in prior art exercise treadmills embodying frictional resistance roller assemblies.

A meaningful disadvantage of prior art motorized exercise treadmills includes the general disposition or placement of the motor in relation to the roller assembly and belt. Accordingly, the motor may be generally disposed either in

front of, behind, or at one side of the endless belt. The usual placement or disposition of the motor in relation to prior art exercise treadmills, however, typically minimizes valuable space which could be alternatively allocated to the disposition of other internally working components of the treadmill or for the purpose of increasing the walking surface provided by the dimensional size of the belt.

In accordance with prior art exercise treadmills comprising a flat, horizontal or slightly inclined moveable surface, the endless belt supportably disposed in relation to the rollers will typically absorb the full impact force of the foot of a user repetitively depressed thereagainst. The impact force sustained by the endless belt of prior art exercise treadmills generally produces a breaking effect which causes temporary stalling of the rotational movement of the belt. This undesirable stalling motion of the belt typically alters the continuity of the user's exercise routine and may further institute jerking movements with each step of the user. As the force or pressure associated with the impact of the user's feet on the flat, horizontal surface increases, the more likely prior art exercise treadmills will realize this breaking effect. In this regard, a heavy person running on a horizontal belt supported by rollers engaging a frame will more likely introduce a consistent breaking effect on the rotational movement of the belt, than a lighter person walking on the same treadmill.

Similarly, exercise treadmills of the prior art were developed to provide a springy and resilient walking surface. Prior art exercise treadmills of this type and the flat surface treadmills of the prior art, however, commonly encourage a form of bobbing effect in relation to the up and down motion of the user's body in relation to the moveable surface or belt of the treadmill. This continual bobbing up and down usually makes it nearly impossible for a user to reach and maintain a steady position on the surface of the belt of the treadmill. In addition, because the support structure disposed in relation to the rotating belt is formed to provide a springy and resilient walking surface, a user may feel as if he is wading on the treadmill, rather than walking, jogging or running. Consistent therewith, these types of prior art exercise treadmills are generally unable to satisfactorily simulate natural walking, jogging or running.

Another meaningful disadvantage of exercise treadmills of the prior art is the inherent danger associated with users tending to fall off the back end of the treadmill and become injured. Several attempts have been made to keep a user exercising on prior exercise treadmills from falling off the back end of the endless belt and from the treadmill frame. For example, prior art exercise treadmills were developed by those skilled in the art which include a belt for harnessing the user to the treadmill. Unfortunately, harnessing a user to the treadmill is often found to be as dangerous as falling off the back of the treadmill.

Additionally, exercise treadmills of the prior art may furnish a user with an upright handle to grasp while exercising. While somewhat useful in retaining the user's balance on the rotating endless belt, having to grasp a fixed handle may impede the natural body motion of a user attempting to exercise. Such an encumbrance may be feasible when a user is attempting to walk, but when a user begins to jog or run on prior art exercise treadmills, having to grasp a handle to keep centered on the treadmill may severely interfere with one's natural body motion and further abdicate the inherent physical advantages of the exercise routine.

Another meaningful disadvantage of prior art exercise treadmills is their general inability to reduce the physical

EX2004
Woodway USA, Inc.
IPR2023-00843

impact to the joints and muscles of a user conducting general exercise routines in relation thereto. In this regard, an exercise treadmill which is capable of reducing the physical impact on the knees and back of a user will resolve several barriers left unsolved by known prior art devices, especially in light of providing an operative role in rehabilitative exercises.

Consistent with the foregoing and as illustrated by the number of prior art patents and other disclosures, efforts are continuously being made in an attempt to remedy the above-identified disadvantages. While prior art exercise treadmills may appear generally suitable for their intended purpose, they nevertheless leave much to be desired from the standpoint of effectiveness of operation, safety, reducing the physical impact to the joints and muscles of a user, and simulating the natural body motion of the user exercising thereon. In this regard, the present invention provides for a novel curved deck treadmill which overcomes several deficiencies of exercise treadmills of the prior art and resolves several problems left unsolved by the known prior art.

BRIEF SUMMARY AND OBJECTS OF THE INVENTION

In view of the foregoing, it is a primary object of the present invention to provide a novel curved deck treadmill which provides a structurally supported arcuate shaped, moveable surface on which a user may exercise.

It is also an object of the present invention to provide a curved deck treadmill which comprises a first end and a second end disposed substantially parallel in dimensional relationship and including a deck having an intermediate portion disposed therebetween comprising a substantially arcuate longitudinal configuration which is disposed lower in dimensional relation to the first and second ends.

Further, it is an object of the present invention to provide a curved deck treadmill which maximizes the upper surface area of the belt by effective disposition of a driving means.

It is a still further object of the present invention to provide a curved deck treadmill which substantially prevents a user from falling off the back end of the treadmill and whereby serving to keep the user centered on the upper surface of the treadmill without encumbering the natural body motion of the user exercising thereon.

In addition, it is an object of the present invention to provide a curved deck treadmill which is capable of providing meaningful walking, jogging, or running comfort in relation to the physiology of a user, thereby facilitating an upper surface which supportably provides for a longer stride with more flexibility.

Moreover, it is an object of the present invention to provide a curved deck treadmill which is capable of reducing the physical impact to the joints and muscles (e.g., the knees and back) of a user, thus providing an operative device having rehabilitative functionality.

Similarly, it is an object of the present invention to provide a curved deck treadmill which provides a continuous, smooth exercising motion.

Consistent with the foregoing objects, and in accordance with the invention as embodied and broadly described herein, a curved deck treadmill is disclosed in one embodiment of the present invention as including a support frame comprising a first side and a second opposing side having a deck supportably disposed therebetween. In preferred design, the deck comprises a first end, a second end, and an intermediate portion disposed between the first and second ends. The intermediate portion of the deck is preferably formed having a substantially arcuate configuration such that a significant portion of the intermediate portion may be operably disposed dimensionally lower in longitudinal relation to the first and second ends of the deck. Further, a roller assembly is provided preferably comprising a first and second roller. The first roller may be rotatably disposed contiguous the first end of the deck between the first side and the second side of the support frame. Correspondingly similar in construction and design, a second roller is preferably disposed contiguous the second end of the deck between the first and second sides of the support frame. In operation, an endless belt may be rotatably mounted in relation to the roller assembly and operatively disposed in relation to the deck, whereby providing a structurally supported arcuate shaped, moveable surface on which a user may exercise.

BRIEF DESCRIPTION OF THE DRAWINGS

The foregoing and other objects and features of the present invention will become more fully apparent from the following description and appended claims, taken in conjunction with the accompanying drawings. Understanding that these drawings depict only typical embodiments of the invention and are, therefore, not to be considered limiting of its scope, the invention will be described with additional specificity and detail through use of the accompanying drawings in which:

FIG. **1** is a perspective view of one presently preferred embodiment of a curved deck treadmill;

FIG. **2** is a side elevational view of the embodiment of FIG. **1** exposing one presently preferred arrangement of the internal components of the present invention;

FIG. **3** is a cut-away view of the embodiment of FIG. **1**;

FIG. **4** is a side elevational view of one presently preferred embodiment of one side of a support frame of one presently preferred embodiment of the present invention; and

FIG. **5** is a exploded, fragmentary cross-sectional view of the embodiment of FIG. **2** taken along lines **5**—**5** of FIG. **2**.

DETAILED DESCRIPTION OF THE PREFERRED EMBODIMENT@S

It will be readily understood that the components of the present invention, as generally described and illustrated in the Figures herein, could be arranged and designed in a wide variety of different configurations. Thus, the following more detailed description of the embodiments of the system and method of the present invention, as represented in FIGS. **1** through **5**, is not intended to limit the scope of the invention, as claimed, but it is merely representative of the presently preferred embodiments of the invention.

The presently preferred embodiments of the invention will be best understood by reference to the drawings, wherein like parts are designated by like numerals throughout.

One presently preferred embodiment of the present invention, designated generally at **10**, is best illustrated in FIGS. **1** and **2**. As shown, the curved deck treadmill **10** comprises a support frame **12** having a first side **20** and a second opposing side **22** and having a deck **56** supportably disposed therebetween. In preferred construction, the deck **56** comprises a first end **58**, a second end **60**, and an intermediate portion **62** disposed therebetween. The intermediate portion **62** of the deck **56** is preferably formed

EX2004
Woodway USA, Inc.
IPR2023-00843

having an arcuate configuration such that a significant portion of the intermediate portion **62** may be operably disposed dimensionally lower in longitudinal relationship to the first and second ends **58**, **60** of the deck **56**. Further, a roller assembly **14** is provided preferably comprising a first and second roller **78**, **86**. The first roller **78** may be rotatably disposed contiguous the first end **58** of the deck **56** between the first side **20** and the second opposing side **22** of the support frame **12**. Correspondingly similar in construction and design, a second roller **86** is preferably disposed contiguous the second end **60** of the deck **56** between the first and second sides **20**, **22** of the support frame **12**. In preferred operation, a belt **16** is rotatably mounted in relation to the roller assembly **14** and operatively disposed in relation to the deck **56**, thereby providing a structurally supported arcuate shaped, moveable surface on which a user may exercise.

As further illustrated in FIGS. **1** and **2**, at least one crossbar **130** may be structurally supported in relation to the support frame **12**. Preferably, the crossbar **130** functionally supports a console **132** substantially above the upper surface area of the support frame **12**, deck **56**, and belt **16**. Disposed in relation to the support frame **12**, the crossbar **130** may be formed having a generally U-shaped configuration. Further, the crossbar **130** may comprise a pivotal engagement **140** which provides a means for pivotally engaging one or more handles **134**, **144** in relation to the crossbar **130** at the opposing sides thereof **126**, **128**.

Structurally, the support frame **12** preferably comprises a first side **20** and a second opposing side **22** which, in combination, provide a means for structurally supporting the curved deck treadmill **10** and the various components thereof. In one preferred embodiment of the present invention, the support frame **12** is preferably formed of a substantially sturdy, rigid material which provides sufficient structural integrity to support the curved deck treadmill **10** and a user exercising thereon. For example, the support frame **12** may be formed of any of numerous organic, synthetic or processed materials which are mostly thermoplastic or thermosetting polymers of high molecular weight with or without additives, such as, plasticizers, auto oxidants, extenders, colorants, ultraviolet light stabilizers, or fillers, which can be shaped, molded, cast, extruded, drawn, foamed or laminated. It will be readily appreciated by those skilled in the art, however, that a wide variety of other suitable materials such as, metal or metal alloys, fiberglass, wood, ceramic, graphite and/or other composite or polymeric materials are possible which are consistent with the spirit and scope of the present invention.

Preferably, the support frame **12** may be formed having a first side **20** being disposed substantially parallel a second opposing side **22**, thereby providing a generally longitudinal alignment therebetween. In one presently preferred embodiment of the present invention, because the first side **20** and the second side **22** of the support frame **12** are relatively constructed having a substantially comparable structure and configuration, only the first side **20** will be operatively disclosed in detail herein. Any structural variations which exist between the first side **20** and the second opposing side **22** will be further disclosed herein, thus noting such variations which exist between the first side **20** and the second opposing side **22** will be further disclosed, whereby noting such variation(s).

As shown in FIGS. **1** and **3**, the first side **20** of the support frame **12** includes a first end **24** and a second opposing end **26**. The first and second ends **24**, **26** of the first side **20** are preferably disposed in corresponding relation to the first and second ends **58**, **60** of the deck **56**. As best illustrated in FIGS. **2** and **4**, a first journal housing **28** may be formed substantially adjacent the first end **24** of the first side **20** of the support frame **12**. Preferably, the first journal housing **28** is formed having an opening readily adapted to receive at least one journaling end (not shown) of the first roller **78**. Similarly, a second journal housing **34** may be formed substantially adjacent the second end **26** of the first side **20** of the support frame **12** and include an opening readily adapted to receive at least one journaling end (not shown) of the second roller **86**.

In preferred design, the journal housings **28**, **34** formed at the first and second ends **24**, **26** of the first side **20** of the support frame **12**, respectively, may be formed having an opening which provides a means for facilitating the introduction of the journaling ends of the respective first and second rollers **78**, **86**. Preferably, the opening comprises an elongated slot wherein the journaling ends of the first and second rollers **78**, **86** may be slideably adjusted. By introducing the journaling ends of the first and second rollers **78**, **86** in the respective elongated slots formed in the journal housings **28**, **34** of the support frame **12**, the horizontal displacement of the belt **16** may, accordingly, be adjusted in relation to the disposition of the first and second rollers **78**, **86**.

In one presently preferred embodiment of the present invention, a third journal housing **36** may be formed in the first side **20** of the support frame **12**, as best illustrated in FIGS. **2**, **4** and **5**. Preferably formed between the first journal housing **28** and the second journal housing **34** of the first side **20** of the support frame **12**, the third journal housing **36** may be disposed dimensionally lower than the substantially horizontal displacement of the first and second journal housings **28**, **34**. Consistent with the first and second journal housings **28**, **34**, the third journal housing **36** is preferably formed including an opening having an internal periphery sufficient for introducing at least one journaling end **90** of the third roller **88** therein, as shown in FIG. **5**. Preferably, the journaling end **90** of the third roller **88** is formed having a substantially cylindrical configuration comprising an outer diameter which is less than the internal diameter of the opening formed in the third journal housing **36**. It will be readily appreciated by those skilled in the art, however, that other shapes, sizes and/or configurations of the journal housings **28**, **34**, **36** and/or the internal openings formed therein are possible as such to provide a means for introducing at least one journaling end of the first, second and third rollers **78**, **86**, **88**, respectively, therein.

In accordance with one presently preferred embodiment of the present invention, the journal housings **28**, **34**, **36** formed in the first side **20** of the support frame **12** may be disposed in operative alignment with the journal housings formed in the second side **22** of the support frame **12**. This arrangement of the journal housings **28**, **34**, **36** in both the first and second sides **20**, **22** of the support frame **12** preferably provides for the introduction and retention of the journaling ends of the corresponding rollers **78**, **86**, **88**, thereby facilitating a means for rotating the rollers on a substantially fixed axis.

Although the journal housings **28**, **34**, **36** of the first and second sides **20**, **22** of the support frame **12** preferably receive the journaling ends of the respective rollers **78**, **86**, **88**, it will be apparent to those skilled in the art that other mechanisms may be constructed and/or numerous other relative dispositions of the respective rollers may be anticipated in accordance with the inventive principles disclosed herein in order to achieve the desired results of the present invention. It is intended, therefore, that the examples pro-

EX2004
Woodway USA, Inc.
IPR2023-00843

vided herein be viewed as exemplary of the principles of the present invention, and not as restrictive to a particular structure or structures for implementing those principles.

Referring back to FIGS. **1** and **2**, the belt **16** operably disposed in relation to the rollers **78**, **86**, **88** may be formed comprising an endless construction which preferably consists of a sufficiently sturdy material. For example, the belt **16** may be formed of an endless sheet of a flexible canvas or a rubber-impregnated material. The belt **16** may alternatively be formed of a thin, flat band of steel or a sufficiently tenacious polymeric or composite material. As will be readily appreciated by those skilled in the art, the belt **16** can, of course, be formed of a wide variety of suitable materials which are consistent with the spirit and scope of the present invention.

In accordance with one preferred arrangement, the belt **16** is rotatably disposed in relation to the first roller **78**, the second roller **86**, and the third roller **88**, whereby each roller **78**, **86**, **88** is preferably disposed in structural relation to the support frame **12** at their respectively preferred positions, as disclosed above. The tension of the belt **16** may be readily tightened or loosened in relation to the disposition of the first and second rollers **78**, **86** engageably disposed in the respective elongated slot of the journal housings **28**, **34**. Moreover, a conventional fixation member (not shown) may be utilized to provide a means for disposing the journaling ends of the rollers **78**, **86**, **88** in a fixed and/or adjustable relationship to the respective opening or elongated slot formed in the journal housings **28**, **34**, **36** of the support frame **12**.

Referring back to the features of the support frame **12**, a deck slot **32** may be formed which extends substantially the longitudinal length of the first side **20**, as shown in FIG. **4**. Preferably, the deck slot **32** is disposed such that the deck **56** may be insertably disposed therein. In one presently preferred embodiment of the present invention, the deck slot **32** comprises a substantially curvilinear configuration which substantially corresponds in dimensional shape to the arcuate configuration of the intermediate portion **62** of the deck **56**. Similarly, the deck slot **32** is preferably formed having a sufficient size and depth sufficient to retain at least one longitudinal side of the deck **56** engageably inserted therein, such that any possible flexing of the deck **56** from the weight of a user will not generally unseat the deck **56** from the deck slot **32**. Whereas, the opposing longitudinal side of the deck **56** is preferably disposed within the deck slot **32** formed in the second side **22** of the support frame **12**.

In preferred construction, the deck **56** is formed of a substantially sturdy, rigid material to provide sufficient structural integrity to adequately support the weight of a user exercising on the curved deck treadmill **10**. In one presently preferred embodiment of the present invention, the deck **56** is preferably formed consisting of a wood laminate having an upper surface **66** that may be impregnated with a wax material to provide a means for reducing the coefficient of friction acting thereon. In an alternate embodiment, the deck **56** may be formed of any of numerous organic, synthetic or processed materials which are mostly thermoplastic or thermosetting polymers of high molecular weight with or without additives, such as, plasticizers, auto oxidants, extenders, colorants, ultraviolet light stabilizers, or fillers, which can be shaped, molded, cast, extruded, drawn, foamed or laminated. It will be readily appreciated by those skilled in the art, however, that a wide variety of other suitable materials such as, metal or metal alloys, fiberglass, ceramic, graphite and/or other composite or polymeric materials are possible which are consistent with the spirit and scope of the present invention.

As shown in FIG. **4**, the first side **20** of the support frame **12** may comprise one or more rib seats **30** disposed adjacent the deck slot **32**. The rib seats **30** are preferably formed having an internal surface area sufficient for seating at least one end of a support rib **54** disposed therein. As best illustrated in FIG. **3**, one or more support ribs **54** extend substantially transverse dimensionally between the first and second sides **20**, **22** of the support frame **12**. In preferred construction, the support ribs **54** provide a means for structurally supporting the deck **56**. Similarly, the rib seats **30** are preferably formed such that when the support ribs **54** are introduced therein, the deck **56** may be readily disposed within the respective deck slots **32** formed in the first and second sides **20**, **22** of the support frame **12** and structurally supported by the support ribs **54** disposed in relation thereto.

In one presently preferred embodiment of the present invention, the support ribs **54** are formed of a sufficiently sturdy, rigid material sufficient to provide adequate structural support to the deck **56**. For example, the support ribs **54** may be formed of a rigid metal or metal alloy. It will be readily appreciated by those skilled in the art, however, that a wide variety of other suitable materials such as, fiberglass, ceramic, graphite, any of numerous organic, synthetic or processed materials which are mostly thermoplastic or thermosetting polymers of high molecular weight with or without additives, such as, plasticizers, auto oxidants, extenders, colorants, ultraviolet light stabilizers, or fillers, which can be shaped, molded, cast, extruded, drawn, foamed or laminated, and/or other composite materials are possible that are consistent with the spirit and scope of the present invention.

In current design, the support ribs **54** are formed having a generally elongated configuration which is capable of being seated in a corresponding rib seat **30** disposed in a spaced-apart relation in the first side **20** and the second opposing side **22** of the support frame **12**. Accordingly, the rib seats **30** have a corresponding dimensional shape which provides a means for introducing and retaining the ends of the support ribs **54** therein.

As will be readily appreciated, the quantity and disposition of rib seats **30** and engaging support ribs **54** supportably disposed in relation to the support frame **12** may vary according to the structural integrity generally required to support the deck **56** and the weight of a user. For example, the addition of rib seats **30** and support ribs **54** near the first and second ends **24**, **26** of the support frame **12** may increase the overall structural integrity of the deck **56** in relation to the support frame **12**. Accordingly, those skilled in the art will readily recognize other possible modifications and adaptations which are consistent with the spirit and scope of the present invention.

In addition to the support ribs **54** which provide a means for engageably supporting the first and second sides **20**, **22** of the support frame **12**, the support frame **12** may include a plurality of structural reinforcement members **50** disposed in relation to the first and second sides **20**, **22**, as best shown in FIG. **4**. As illustrated, the plurality of reinforcement members **50** may be disposed horizontally, vertically, and/or diagonally throughout the sides **20**, **22** to provide a means for increasing the ability of the first and second sides **20**, **22** to resist buckling or a loss of structural integrity. In one presently preferred embodiment of the present invention, the structural members **50** are preferably formed along the interior surface of the first side **20** of the support frame **12**. It will be readily appreciated by those skilled in the art, however, that other structural reinforcing components may be added to further enhance the supportable nature of the support frame **12** or for enhancing the inherent aesthetics of the device.

EX2004
Woodway USA, Inc.
IPR2023-00843

In one presently preferred embodiment of the present invention, the first side **20** of the support frame **12** may comprise at least one conventional foot roller assembly **38** mountably disposed in relation thereto, as best shown in FIG. **2**. The foot roller assembly **38** preferably includes one or more wheels **42** rotatably connected thereto in such a manner so as to provide a means for readily moving the curved deck treadmill **10**. The foot roller assembly **38** may further comprise a force absorbing member **40** disposed in relation thereto which provides a means for absorbing any forces or shocks sustained while moving the present invention from one location to another. Correspondingly, the force absorbing member **40** may consist of a conventional shock absorber which is useful over rough surfaces in absorbing sudden movement, bounces, etc.

The force absorbing member **40** may also include a means for stabilizing the curved deck treadmill **10** at an elevated position so as to provide a means for inclining the front end **24** of the support frame **12** for increasing user workout. In this regard, the force absorbing member **40** may comprise a gas or oil filled shock or, in the alternative, an electric gear motor having a locking shaft which elevates the front end **24** of the support frame **12**. It will be apparent that other mechanisms may be constructed in accordance with the inventive principles set forth herein. It is intended, therefore, that the example provided herein be viewed as exemplary of the principles of the present invention, and not as restrictive to a particular structure for implementing those principles.

As mentioned above, the second opposing side **22** of the support frame **12** is correspondingly similar in dimensional structure and configuration to that of the first side **20**. Accordingly, the components disposed on or in relation to the first side **20** of the support frame **12** are preferably disposed on or in relation to the second side **22**. The incorporation of substantially comparable sides **20**, **22** of the support frame **12** comprises one presently preferred embodiment. It is intended, therefore, that the example provided herein be viewed as exemplary of the principles of the present invention, and not as restrictive to a particular structure for implementing those principles. Accordingly, the utilization of a support frame having correspondingly similar sides is thus by way of illustration only and not by way of limitation.

Referring now to FIG. **5**, the curved deck treadmill **10** may include one or more belt securing assemblies **94** which provide a means for retaining the endless belt **16** in a curvilinear configuration being substantially flush with the upper surface **66** of the deck **56**. Preferably, the belt securing assemblies **94** provide a means for substantially conforming the inherent flexible nature of the belt **16** to the arcuate configuration of the intermediate portion **62** of the deck **56**. In design, one or more belt securing assemblies **94** may be disposed in spaced-apart relation along the upper surface **66** of the intermediate portion **62** of the deck **56**, as shown in FIG. **2**, to sufficiently retain the belt **16** in operable disposition to the deck **56**.

In one presently preferred embodiment of the present invention, the belt securing assembly **94** comprises a roller **98** having an axle **100** which rotatably engages a mounting bracket **96**. The mounting bracket **96** is preferably disposed in relation to the roller **98** such that the roller **98** may engage the belt **16**, thereby substantially retaining a side portion of the belt **16** substantially flush with the deck **56**. In preferred operation, as the belt **16** rotates in relation to the roller assembly **14**, the rollers **98** of the belt securing assembly **94** preferably rotate in relation thereto. It will be apparent that other belt securing mechanisms may be constructed in accordance with the inventive principles set forth herein. Correspondingly, those skilled in the art may recognize other possible modifications and/or adaptations which are consistent with the spirit and scope of the present invention.

Referring back to FIGS. **1** and **3**, a cover member **68** may be disposed in connection between the first and second sides **20**, **22** of the support frame **12**. The cover member **68** is preferably formed providing a means for covering the internal components of the curved deck treadmill **10**. In current design, the cover member **68** may be removably disposed in connection to the first and second sides **20**, **22** of the support frame **12** whereby allowing for easy access to the internal working components of the present invention. For example, the cover member **68** may be attached to the support frame **12** by a series of tabs **72** disposed along the outer edge **70** of the cover member **68** and arranged in such a manner so as to removably engage the first and second sides **20**, **22**, as illustrated depicted in FIG. **5**. Additionally, a cover member **168** may provide a means for covering the belt securing assemblies **94** disposed in relation to the first and second sides **20**, **22** of the support frame **12**.

In preferred structure, the cover member **168** which is disposed in relation to covering the belt securing assembly **94** may comprise a horizontal portion **104** disposed in relation to one or more vertical sides **106**. As discussed above, the mounting bracket **96** may be fixed to the cover member **168** such that it provides a means for assisting in the rotational alignment of the roller **98** of the belt securing assembly **94**. Preferably, at least one vertical side **106** is disposed adjacent the roller **98** of the belt securing assembly **94** such that the vertical side **106** and the horizontal portion **104** of the cover member **168** substantially cover the belt securing assembly **94**. Further, one or more longitudinal grooves **110** may be formed in the exterior surface of the horizontal portion **104** of the cover member **168**, as best shown in FIGS. **1**, **3** and **5**. As will be readily appreciated, the cover member **168** may include other structural components for either functional or aesthetic reasons.

In one presently preferred embodiment of the present invention, the cover members **68**, **168** are preferably formed of a substantially sturdy, semi-flexible material. For example, the cover members **68**, **168** may be formed of any of numerous organic, synthetic or processed materials which are mostly thermoplastic or thermosetting polymers of high molecular weight with or without additives, such as, plasticizers, auto oxidants, extenders, colorants, ultraviolet light stabilizers, or fillers, which can be shaped, molded, cast, extruded, drawn, foamed or laminated. It will be readily appreciated by those skilled in the art, however, that a wide variety of other suitable materials such as, metal or metal alloys, fiberglass, wood, ceramic, graphite and/or other composite or polymeric materials are possible which are consistent with the spirit and scope of the present invention.

Referring now to FIG. **5**, the belt securing assembly **94** and the corresponding cover member **68** may be attached to the support frame **12** by a conventional fastening means. For example, in one presently preferred embodiment of the present invention, a bolt **118** may be disposed through an aperture **112** formed in the cover member **168** and at least one aperture **114** formed in a respective side **20**, **22** of the support frame **12**. Alternatively, the bolt **118** may be disposed through an aperture **116** formed in a support rib **54** which may further serve to secure the support rib **54** to the support frame **12**. Moreover, if a longitudinal side **64** of the deck **56** were to extend past the apertures formed in the cover member **168** and the support frame **12**, a correspond-

EX2004
Woodway USA, Inc.
IPR2023-00843

ing through-bore (not shown) may be formed in the deck **56** and disposed in alignment with the other apertures. If desired, a locking nut **120** may be disposed in relation to a first end of the bolt **118** to secure the preferred engagement outlined above between the various components of the curved deck treadmill **10**.

In one presently preferred embodiment of the present invention, a driving means **84** is operably connected to at least one roller to enable the rotation of the belt **16**. The driving means **84** preferably comprises a conventional electric motor for rotating the belt **16**. In preferred arrangement, a pulley **80** is disposably mounted to the first roller **78** at the first end **24** of the support frame **12**. In operation, a pulley belt **82** may be engageably disposed between the pulley **80** and the motor **84** to provide a means for correspondingly rotating the first roller **78** upon the forced rotation of the pulley belt **82** by the motor **84**.

As best illustrated in FIG. **2**, the motor **84** may be mounted to the support frame **12** substantially adjacent the first end **58** and beneath the deck **56** by means of a fixation bracket (not shown). Alternatively, it will be readily appreciated by those skilled in the art, however, that the motor **84** may be engageably disposed in relation to the second or third rollers **86**, **88** to enable the rotation of the belt **16**.

In an alternate embodiment, the curved deck treadmill **10** or the present invention may be implemented without a driving means engageably disposed to a roller in order to facilitate the forced rotation of the belt **16**. If so implemented, the rollers **78**, **86** and **88** and the deck **56** should be generally calibrated in relation to the belt **16** to provide an optimal frictional resistance to enable a user to safely walk, jog, and/or run thereon, while still providing sufficient resistance to enable a user to exercise.

Referring now to FIGS. **1**, **2** and **3**, a crossbar **130** may be preferably formed having a generally U-shaped configuration and may be disposed in fixed relation to the first and second sides **20**, **22** of the support frame **12** by means of conventional fasteners. The fasteners may comprise one or more internally threaded seats **46** (as best shown in FIG. **4**) wherein an appropriately sized fastener **48** may be introduced to provide a threaded or force-fit engagement therebetween for securing the first side **126** of the cross-bar **130** to the first side **20** of the support frame **12**. A second end **128** of the crossbar **130** may be similarly mounted in a preferably fixed engagement to the second side **22** of the support frame **12**. Although the crossbar **130** of the present invention is illustrated and described in connection with a generally U-shaped configuration, those skilled in the art will recognize that various other geometrical configurations are likewise suitable. The use of a generally U-shaped configuration is thus by way of illustration only and not by way of limitation.

In one presently preferred embodiment of the present invention, a console **132** is preferably mounted in relation to the cross-bar **130**. Supportably disposed by the cross-bar **130**, the console **132** may be mounted substantially above the support frame **12**, the deck **56**, and the belt **16** such that a user may view the information displayed on the console **132**. The console **132** preferably comprises a processor, a display, and may include input keys for entering user programmable options. Similarly, the console **132** may provide a variety of feedback data, such as elapsed time, speed, distance, pulse rate, and/or other functions and features, as desired.

It will be appreciated by those skilled in the art that the console **132** may incorporate additional external components and/or devices in carrying out its function. For example, the console **132** may include one or more sensors for ascertaining the rotational speed of the belt **16**, a sensor for determining the pulse or heart rate of a user, a device for controlling the speed of the motor, etc. Although such external components and/or devices are not specifically shown in the Figures, it is clearly contemplated by the present invention that such electronic and/or mechanical equipment are readily anticipated herein for utilization with the present invention.

In preferred structure, the crossbar **130** may comprise a pivotal engagement **140** which provides a means for pivotally engaging one or more handles **134**, **144** in relation to the opposing sides **126**, **128** of the crossbar **130**, as illustrated in FIGS. **1**, **2** and **3**. The handles **134**, **144** may be constructed of any suitable rigid material. For example, the handles **134**, **144** may be formed of a metal or metal alloy, wood, fiberglass, graphite, ceramic, plastic or any other suitable composite material. Additionally, the handles **134**, **144** may include a gripping member (not shown) preferably disposed substantially adjacent the distal ends of the handles **134**, **144** to enable a user to more easily grip the handle. In particular, a rubber grip may be disposed in relation to the distal end **138** of the handle **134**, **144** and positioned so that a user may grasp the gripping member of the handle **134**, **144** when exercising.

Preferably, a first handle **134** includes a pivot end **136**, a distal end **138** and an intermediate portion disposed therebetween. As best shown in FIG. **1**, the pivot end **136** of the first handle **134** may be pivotally connected to the first side **126** of the crossbar **130** by means of a pivotal connection **140**. In current design, the pivotal connection **140** comprises a conventional through-bore and a pivot pin **142** operably disposed therein, whereby providing a pivoting means for the handle **134** to pivot in relation thereto. Similarly, a second handle **144** may be pivotally connected to the second side **128** of the crossbar **130**.

In functional operation, the handles **134** and **144** are preferably positioned such that a user may grasp approximate the distal end **138** of the handles **134**, **144** while exercising and, accordingly, pivot the handles back and forth in correspondence to the user's stride, whereby potentially invoking an aerobic workout. In an alternative embodiment, the handles **134**, **144** may be provided with some conventional form of resistance to further facilitate the exercising of the upper body of a user.

Although the first **134** and second handles **144** are described herein as being connected to the opposing sides **126**, **128** of the crossbar **130** by a pivotal connection **140**, it will be readily appreciated by those skilled in the art that other points of connection are possible. For example, the first and second handles **134**, **144** may be pivotally connected to the first and second sides **20**, **22**, respectively, of the support frame **12**. Alternatively, the handles **134**, **144** may be operably connected to the motor **84** to provide a means for encouraging a user to maintain a predetermined, constant stride on the rotating belt **16**, while maintaining a constant back-and-forth arm movement.

From the above discussion, it will be appreciated that the present invention provides a novel curved deck treadmill which provides a structurally supported arcuate shaped moveable surface on which a user may exercise. The present invention further provides a curved deck treadmill which maximizes the upper surface area of the belt by effective disposition of the driving means. In addition, the present invention substantially prevents a user from falling off the

EX2004
Woodway USA, Inc.
IPR2023-00843

back of the treadmill and whereby serves to keep the user centered on the upper surface of the rotating belt without encumbering the natural body motion of the user exercising thereon.

Unlike the prior art, the curved deck treadmill of the present invention comprises a first end and a second end disposed substantially parallel in dimensional relationship and including a deck having an intermediate portion disposed therebetween comprising a substantially arcuate longitudinal configuration which is disposed lower in dimensional relation to the first and second ends. Similarly, the novel configuration of the present invention is capable of reducing the physical impact to the joints and muscles (e.g., the knees and back) of a user, thus providing an operative device having rehabilitative functionality. Moreover, the present invention provides a continuous, smooth exercising motion capable of providing meaningful exercise comfort, thereby facilitating an upper surface which supportably provides for a longer stride with more flexibility.

The present invention may be embodied in other specific forms without departing from its spirit or essential characteristics. The described embodiments are to be considered in all respects only as illustrative, and not restrictive. The scope of the invention is, therefore, indicated by the appended claims, rather than by the foregoing description. All changes which come within the meaning and range of equivalency of the claims are to be embraced within their scope.

What is claimed and desired to be secured by United States Letters Patent is:

1. An exercise treadmill, comprising:

a support frame having a first end and a second opposing end, wherein said first end being disposed substantially parallel in dimensional relation to said second end;

a deck having an intermediate portion comprising a substantially arcuate longitudinal configuration, said intermediate portion engageably disposed between said first and second ends of said support frame at a position substantially lower in dimensional relation to said first and second ends;

a roller assembly rotatably disposed in operable relation to said support frame;

a belt rotatably engaging said roller assembly and further disposed in structural relation to said deck, whereby said belt provides a substantially arcuate, selectively moveable surface; and

at least one belt securing assembly providing means for retaining said belt substantially flush with said deck.

2. A curved deck treadmill as defined in claim **1** further comprising a driving means operably connected to said roller assembly.

3. Art exercise treadmill as defined in claim **2** wherein said driving means comprises a motor.

4. An exercise treadmill as defined in claim **2** wherein said driving means is mountably disposed in relation to said support member and beneath said deck.

5. An exercise treadmill as defined in claim **1** wherein said support frame comprises a first side and a second opposing side.

6. An exercise treadmill as defined in claim **1** wherein said roller assembly comprises a first roller disposed at said first end of said support frame.

7. An exercise treadmill as defined in claim **6** wherein said roller assembly further comprises a second roller disposed at said second end of said support frame.

8. An exercise treadmill as defined in claim **6** wherein said roller assembly further comprises a third roller disposed between said first end and said second end of said support frame.

9. An exercise treadmill as defined in claim **1** wherein said belt is formed of a flexible material and having an endless configuration.

10. An exercise treadmill as defined in claim **1** further comprising a crossbar supportably disposed in relation to said support frame.

11. An exercise treadmill as defined in claim **10** wherein said crossbar comprises a console mountably disposed in relation thereto.

12. An exercise treadmill as defined in claim **11** wherein said console is programmable.

13. An exercise treadmill as defined in claim **10** wherein said crossbar comprises at least one handle pivotally disposed in relation thereto.

14. An exercise treadmill, comprising:

a support frame having a first end and a second opposing end, said support frame further comprising a first side and a second opposing side;

a deck comprising a first end, a second end, and an intermediate portion, said first end of said deck being disposed substantially parallel in dimensional relation to said second end of the deck, said intermediate portion having a substantially arcuate longitudinal configuration, wherein the intermediate portion is engageably disposed between the first and second ends of the deck at a position substantially lower in dimensional relation thereto;

a first roller rotatably disposed in relation to said first side and said second side of said support frame, said first roller disposed contiguous said first end of said support frame;

a second roller rotatably disposed in relation to said first side and said second side, said second roller disposed contiguous said second end of said support frame;

a flexible, endless belt rotatably engaging said first and second rollers and being further disposed in structural relation to said deck, whereby said belt in cooperation with the first and second rollers and the deck provides a substantially arcuate, selectively moveable surface; and

at least one belt securing assembly providing means for rotatably retaining said endless belt substantially flush with said deck.

15. An exercise treadmill as defined in claim **14** further comprising a third roller rotatably disposed in relation to said first and second sides of said support frame and substantially between said first and second ends of the support frame.

16. An exercise treadmill as defined in claim **15** wherein said third roller being operatively disposed beneath said intermediate portion of said deck and rotatably engaging said belt.

17. An exercise treadmill as defined in claim **14** further comprising a driving means mountably disposed in relation to said support frame and beneath said deck.

18. An exercise treadmill as defined in claim **17** wherein said driving means is operably connected to said first roller.

19. An exercise treadmill as defined in claim **14** further comprising at least one support rib extending substantially transverse dimensionally between said first and second sides of said support frame to provide means for structurally supporting the deck.

* * * * *

EX2004
Woodway USA, Inc.
IPR2023-00843

UNITED STATES PATENT AND TRADEMARK OFFICE

CERTIFICATE OF CORRECTION

PATENT NO. : 5,709,632
DATED : January 20, 1998
INVENTOR(S) : J.D. Socwell

It is certified that error appears in the above-identified patent and that said Letters Patent is hereby corrected as shown below:

COLUMN	LINE	
5	60-62	delete "which exist between the first side 20 and the second opposing side 22 will be further disclosed, whereby noting such variation(s)." and insert therefor --.--
13 (Claim 3,	50 line 1)	"Art" should read --An--

Signed and Sealed this

Twenty-second Day of December, 1998

Attest:

Bruce Lehman

BRUCE LEHMAN

Attesting Officer

Commissioner of Patents and Trademarks