FOLEY
FOLEY & LARDNER LLP

ATTORNEYS AT LAW
777 EAST WISCONSIN AVENUE
MILWAUKEE, WI 53202-5306
414.271.2400 TEL
414.297.4900 FAX
foley.com

CLIENT/MATTER NUMBER
096208-0197

October 21, 2014

VIA EMAIL <SALES@GYMSTORE.COM; INFO@GYMSTORE.COM>
VIA FEDERAL EXPRESS

Mr. Christopher Kelly
Gym Store, Inc.
188 Varet Street
Brooklyn, New York 11206

Re: Woodway USA, Inc. U.S. Patent No. 8,864,627 and U.S. Trademark Registration No. 3,785,961

Dear Mr. Kelly:

We represent Woodway USA, Inc. ("Woodway") in various intellectual property matters. As you likely know, Woodway has been a leader in the commercial treadmill industry for more than 40 years and strives to provide innovative, specialized treadmill products. To that end, one of Woodway's more recent innovations, its ECOMILL treadmill, is an eco-friendly, totally self-powered treadmill.

Recognizing the unique innovations embodied in the ECOMILL treadmill, Woodway proactively pursued the protection of the good and valuable intellectual property rights embodied in its ECOMILL treadmill. For example, earlier today, the United States Patent and Trademark Office ("USPTO") issued U.S. Patent No. 8,864,627 ("the '627 Patent") entitled "Power Generating Manually Operated Treadmill," to Woodway. A copy of the '627 Patent is enclosed for your reference. In addition, the USPTO has issued to Woodway U.S. Trademark Reg. No. 3,785,961 for the mark CURVE, which grants Woodway the exclusive rights to use this mark in the U.S. marketplace in conjunction with the promotion and sale of treadmills.

Our investigation has uncovered at least two instances of infringement of Woodway's registered, proprietary intellectual property rights, specifically:

1. Gym Store, Inc. ("Gym Store") is importing as well as offering for sale, selling, and featuring on its website, www.gymstore.com, the "GreenJog Cordless Curve Treadmill" that infringes at least one claim of the '627 Patent; and

2. Gym Store is violating Woodway's registered trademark rights through its promotion and use of the mark CURVE in Gym Store's promotion and sale of the GreenJog product. These unauthorized uses are likely to cause confusion, and/or to cause mistake, or to deceive consumers as to source, sponsorship, or affiliation with Woodway and its CURVE mark in violation of 15 U.S.C. §§ 1114 and 1125(a).

We demand that Gym Store immediately:

1. Cease importing, offering for sale, and selling the GreenJog treadmill and any other treadmill utilizing Woodway's patented technology (collectively, "Infringing Treadmills"), and remove these products from Gym Store's website;

2. Cease all use and remove all references in conjunction with treadmills to the term CURVE, or any other confusingly similar mark, from all materials, both electronic and print, including, but not limited to, Gym Store's website(s), marketing materials, advertising materials, catalogs, and brochures;

3. Provide us with a binding, written undertaking that Gym Store agrees to cease and desist from infringing the '627 Patent, and that Gym Store agrees to discontinue all sales activity and distribution of the Infringing Treadmills within Gym Store's control;

4. Destroy all Infringing Treadmills in Gym Store's possession or control or the possession or control of its agents, servants, and employees, and those in active concert or participation with Gym Store;

5. Provide a written itemization detailing the volume of Infringing Treadmills Gym Store has destroyed as a result of this letter; and

6. Provide the identity, including the name and address, of all manufacturers, suppliers, and/or distributors from which Gym Store obtained the Infringing Treadmills.

Please note that Gym Store's continued violation of Woodway's intellectual property rights following receipt of this letter will constitute acts of "willful infringement" of both Woodway's patent and trademark rights thereby dramatically increasing the monetary damages Woodway is entitled to recover from Gym Store.

Please acknowledge Gym Store's receipt of this letter no later than Friday, October 31, 2014, so that we may know that you are timely considering this serious matter. While Woodway wishes to reach an amicable resolution to the aforementioned issues, it will not hesitate to pursue all remedies available to it by law if Gym Store refuses to agree to the demands stated herein. If we do not hear from you by close of business on October 31, 2014, we will assume you have no defensible legal position or desire to amicably resolve this matter and Woodway will proceed accordingly.

Please be advised that nothing contained in this letter is intended as, or may be deemed to constitute, a waiver or relinquishment of any of Woodway's rights and remedies under the circumstances, all of which are hereby expressed reserved.

Sincerely,

Richard J. McKenna
Kadie M. Jelenchick

Enclosures
- Copy of U.S. Patent No. 8,864,627
- Copy of U.S. Trademark Reg. No. 3,785,961

US008864627B2

(12) **United States Patent**
Bayerlein et al.

(10) **Patent No.: US 8,864,627 B2**
(45) **Date of Patent: Oct. 21, 2014**

(54) **POWER GENERATING MANUALLY OPERATED TREADMILL**

(75) Inventors: **Douglas G. Bayerlein**, Oconomowoc, WI (US); **Vance E. Emons**, Hartland, WI (US); **Nicholas Oblamski**, Waukesha, WI (US)

(73) Assignee: **Woodway USA, Inc.**, Waukesha, WI (US)

(*) Notice: Subject to any disclaimer, the term of this patent is extended or adjusted under 35 U.S.C. 154(b) by 467 days.

(21) Appl. No.: **13/257,038**

(22) PCT Filed: **Mar. 9, 2010**

(86) PCT No.: **PCT/US2010/026731**

§ 371 (c)(1), (2), (4) Date: **Sep. 16, 2011**

(87) PCT Pub. No.: **WO2010/107632**

PCT Pub. Date: **Sep. 23, 2010**

(65) **Prior Publication Data**

US 2012/0010048 A1 Jan. 12, 2012

Related U.S. Application Data

(60) Provisional application No. 61/161,027, filed on Mar. 17, 2009.

(51) **Int. Cl.**
A63B 24/00 (2006.01)

(52) **U.S. Cl.**
USPC **482/2**; 482/8; 482/51; 482/54

(58) **Field of Classification Search**
USPC 482/1–9, 51–54, 57, 63, 900–902; 434/247
See application file for complete search history.

(56) **References Cited**

U.S. PATENT DOCUMENTS

219,439	A	9/1879	Blend
1,211,765	A	1/1917	Schmidt
3,637,206	A	1/1972	Chickering, III
3,642,279	A	2/1972	Cutter
3,968,543	A	7/1976	Shino et al.
4,334,676	A	6/1982	Schonenberger
4,548,405	A	10/1985	Lee et al.
4,614,337	A	9/1986	Schonenberger

(Continued)

FOREIGN PATENT DOCUMENTS

CN	2860541	1/2007
CN	201006229	1/2008

(Continued)

OTHER PUBLICATIONS

Andrews et al., The Effect of an 80-Minute Intermittent Running Protocol on Hamstrings Strength Abstract, NSCA Presentation, Jul. 15, 2006, 1 page.

(Continued)

Primary Examiner — Glenn Richman
(74) *Attorney, Agent, or Firm* — Foley & Lardner LLP

(57) **ABSTRACT**

The present invention relates to a manually operated treadmill adapted to generate electrical power comprising a treadmill frame, a running belt supported upon the treadmill frame and adapted for manual rotation, and an electrical power generator mechanically interconnected to the running belt and adapted to convert the manual rotational motion of the running belt into electrical power.

26 Claims, 12 Drawing Sheets

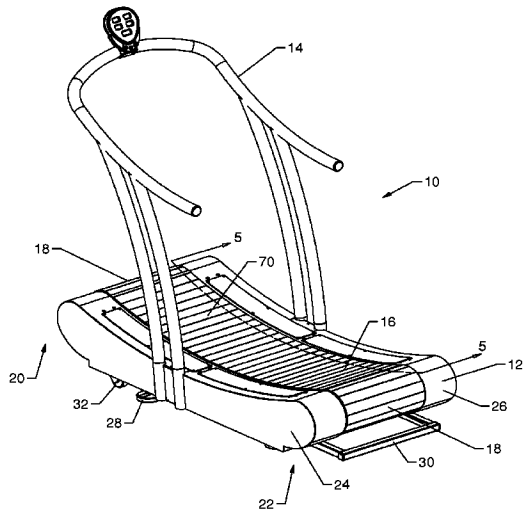

(56) **References Cited**

U.S. PATENT DOCUMENTS

4,635,928	A	1/1987	Ogden et al.	
4,726,581	A	2/1988	Chang	
5,162,988	A	11/1992	Semerau et al.	
5,411,279	A	5/1995	Magid	
5,470,293	A	11/1995	Schonenberger	
5,538,489	A	7/1996	Magid	
5,577,598	A	11/1996	Schoenenberger	
5,709,632	A	1/1998	Socwell	
5,887,579	A	3/1999	Eriksson et al.	
5,897,461	A *	4/1999	Socwell	482/54
6,042,514	A	3/2000	Abelbeck	
6,053,848	A *	4/2000	Eschenbach	482/54
6,095,952	A	8/2000	Ali et al.	
6,146,315	A	11/2000	Schonenberger	
6,348,025	B1	2/2002	Schonenberger	
6,500,097	B1	12/2002	Hall	
6,740,009	B1	5/2004	Hall	
7,090,620	B1 *	8/2006	Barlow	482/63
7,560,822	B1 *	7/2009	Hoffmann	290/1 R
7,717,828	B2 *	5/2010	Simonson et al.	482/52
8,308,619	B1	11/2012	Astilean	
8,343,016	B1	1/2013	Astilean	
2002/0147079	A1	10/2002	Kalnbach	
2006/0003871	A1 *	1/2006	Houghton et al.	482/57
2006/0003872	A1 *	1/2006	Chiles et al.	482/57
2006/0287165	A1	12/2006	Pasqualin	
2008/0287266	A1	11/2008	Smith	
2009/0170666	A1	7/2009	Chiang	
2009/0215589	A1	8/2009	Schoenenberger	
2009/0280960	A1 *	11/2009	Tian	482/2
2011/0266091	A1 *	11/2011	Taylor	185/16
2012/0157267	A1	6/2012	Lo	
2012/0231934	A1	9/2012	Lo	
2012/0270705	A1	10/2012	Lo	

FOREIGN PATENT DOCUMENTS

CN	201030178	3/2008
DE	102005009414	9/2006
EP	1 466 651 A1	10/2004
JP	3148743	6/1991
JP	3148743 U	2/2009
KR	2009007043	1/2009
WO	WO-2010/057238 A2	5/2010

OTHER PUBLICATIONS

Brughelli et al., Effects of Running Velocity on Running Kinetics and Kinematics, Journal of Strength and Conditioning Research, Apr. 2011, 7 pages.

Curvature, http://en.wikipedia.org/wiki/Curvature, Mar. 3, 2010, 1 page.

Hersher, Perfect Landing, http://news.harvard.edu/gazette/story/2010/01/different-strokes/, Feb. 26, 2010, 5 pages.

Hopker et al., Familiarisation and Reliability of Sprint Test Indices During Laboratory and Field Assessment, Journal of Sports Science and Medicine, Dec. 1, 2009, 5 pages.

Integrated Performance Systems, LLC, Youth Athlete-Speed Training Case Study, 2005, 2 pages.

Integrated Performance Systems, LLC, Conditioning in a Professional Athlete Case Study, 2005, 1 page.

Integrated Performance Systems, LLC, Lower Extremity Rehabilitation & Assessment Case Study, 2005, 2 pages.

Lieberman et al., Running Barefoot: Biomechanics of Foot Strike, http://www.barefootrunning.fas.harvard.edu/4BiomechanicsofFootStrike.html, Feb. 26, 2010, 6 pages.

Lieberman et al., Running Barefoot: Biomechanics of Foot Strikes & Applications to Running Barefoot or in Minimal Footwear, http://www.barefootrunning.fas.harvard.edu/index.html, Feb. 26, 2010, 2 pages.

Lieberman et al., Running Barefoot: FAQ, http://www.barefootrunning.fas.harvard.edu/6FAQ.html, Feb. 26, 2010, 3 pages.

Lieberman et al., Running Barefoot: Heel Striking & Running Shoes, http://www.barefootrunning.fas.harvard.edu/2FootStrikes&RunningShoes.html, Feb. 26, 2010, 2 pages.

Lieberman et al., Running Barefoot: Running Before the Modern Shoe, http://www.barefootrunning.fas.harvard.edu/3RunningBeforeTheModernShoe.html, Feb. 26, 2010, 4 pages.

Lieberman et al., Running Barefoot: Why Consider Foot Strike, http://www.barefootrunning.fas.harvard.edu/1WhyConsiderFootStrike.html, Feb. 26, 2010, 1 page.

Owners Manual, The Force, Dec. 18, 2008, 68 pages.

Owners Manual, Force 1, Nov. 29, 2007, 44 pages.

Owners Manual, Force 3, Jan. 28, 2009, 45 pages.

Plantar Fascia, http://en.wikipedia.org/wiki/Plantar_fascia, Mar. 3, 2010, 3 pages.

Ross et al., The Effects of Treadmill Sprint Training and Resistance Training on Maximal Running Velocity and Power, National Strength and Conditioning Association, Mar. 2009, 10 pages.

Sirotic et al., Physiological and Perforamance Test Correlates of Prolonged, High-Intensity, Intermittent Running Performance in Moderately Trained Women Team Sport Athletes, Journal of Strength and Conditioning Research, 2007, 7 pages.

Sirotic et al., The Reliability of Physiological and Performance Measures During Simulated Team-Sport Running on a Non-Motorised Treadmill, Journal of Science and Medicine in Sport, Apr. 11, 2007, 10 pages.

Woodway, Curve 3.0 Specification, May 25, 2011, 1 page.

Woodway, Curve Specification, May 25, 2011, 1 page.

Woodway, Curve XL Specification, May 18, 2011, 1 page.

Woodway, Force Specification, Apr. 8, 2008, 1 page.

Woodway, Force Specification, May 2, 2011, 1 page.

International Preliminary Report for Application No. PCT/US2010/026731, mail date Sep. 29, 2011, 7 pages.

International Preliminary Report for Application No. PCT/US2010/027543, mail date Sep. 29, 2011, 9 pages.

International Search Report and Written Opinion for Application No. PCT/US2010/026731, mail date May 4, 2010, 8 pages.

International Search Report and Written Opinion for Application No. PCT/US2010/027543, mail date May 12, 2010, 10 pages.

* cited by examiner

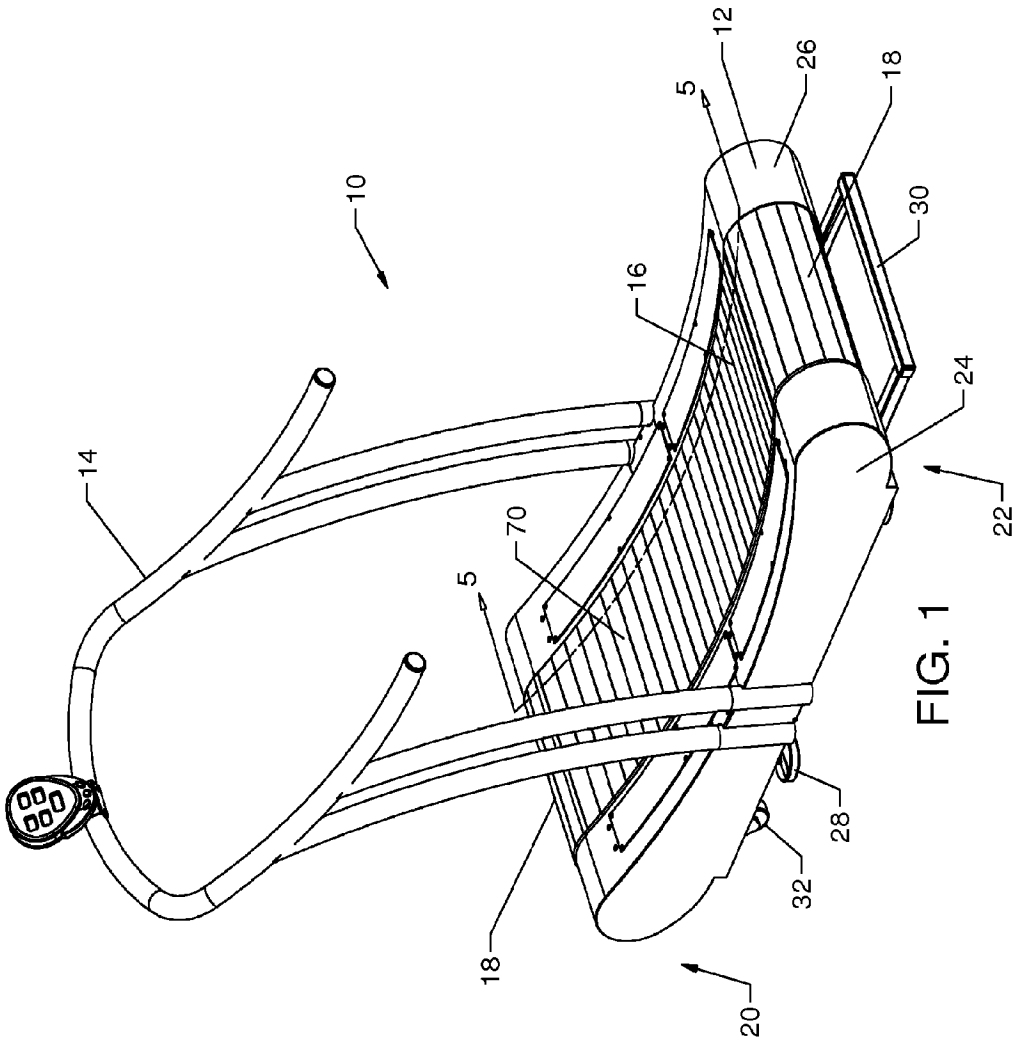

FIG. 1

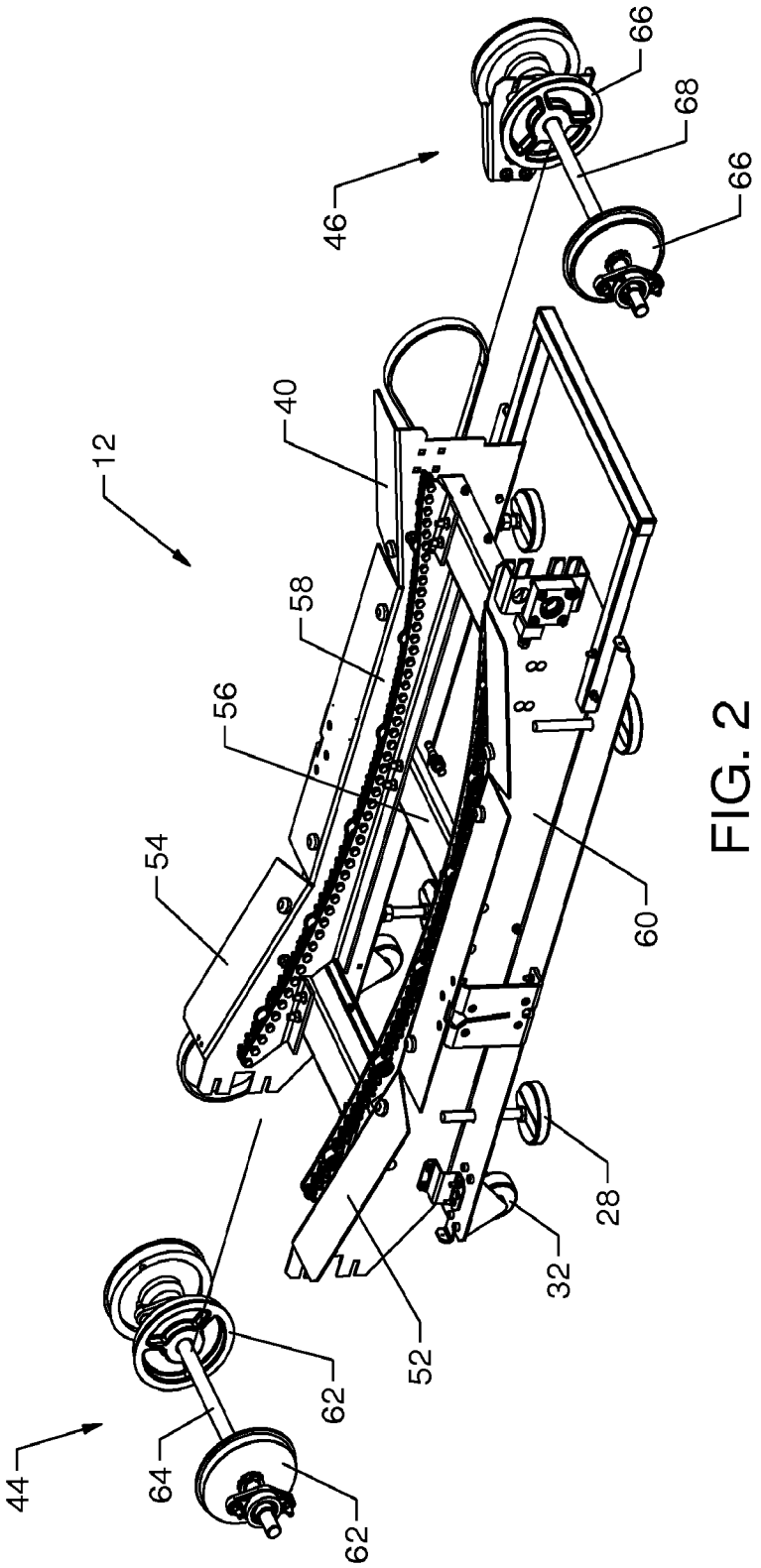

FIG. 2

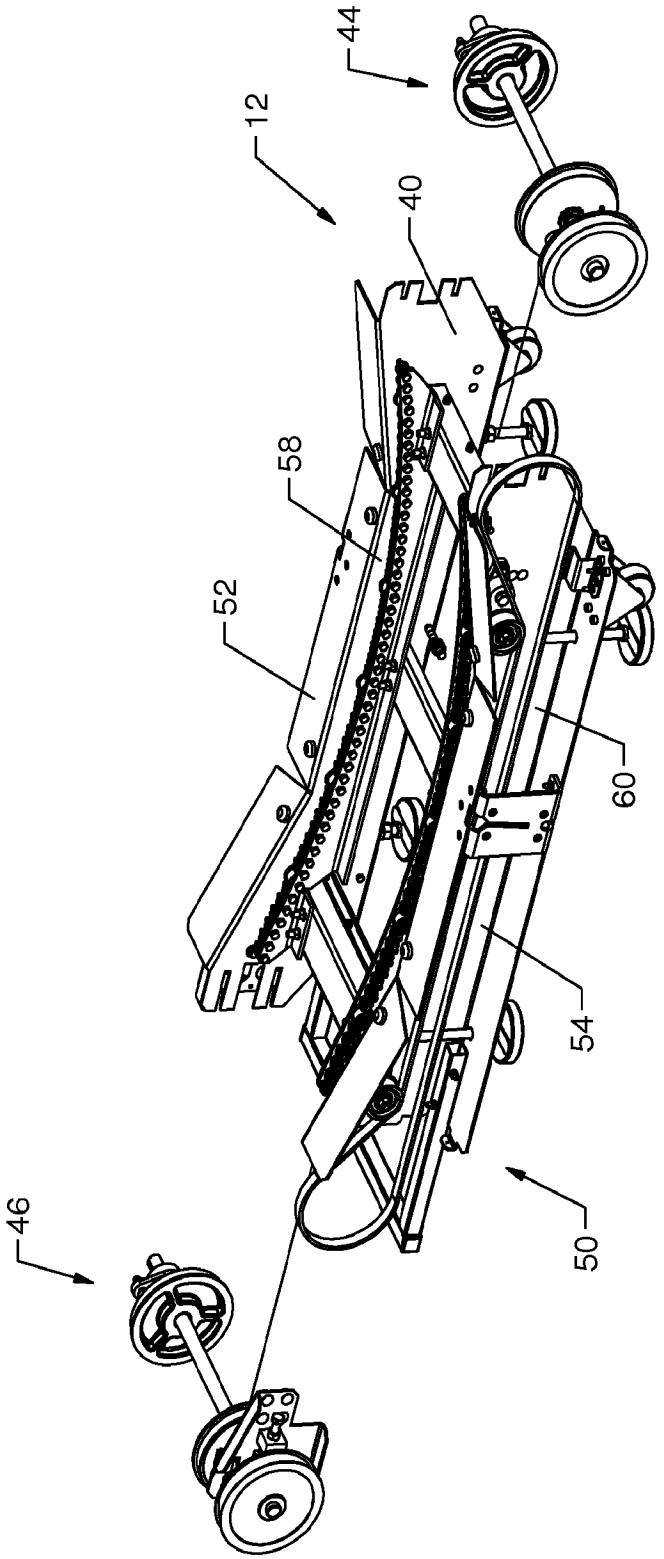

FIG. 3

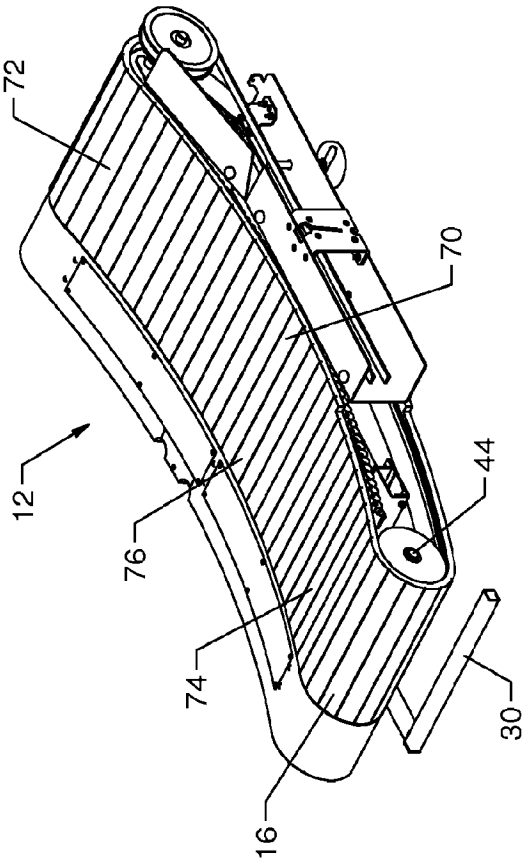

FIG. 4

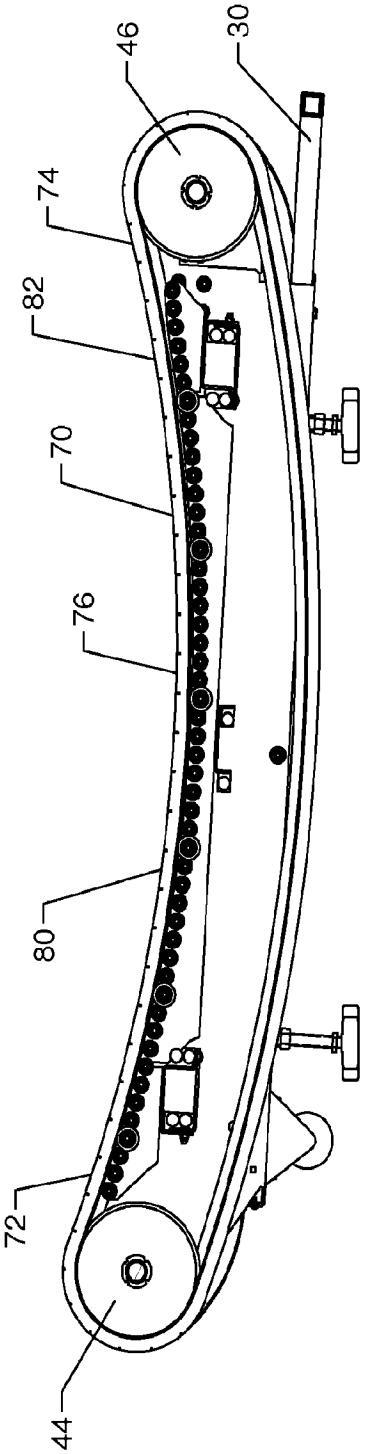

FIG. 5

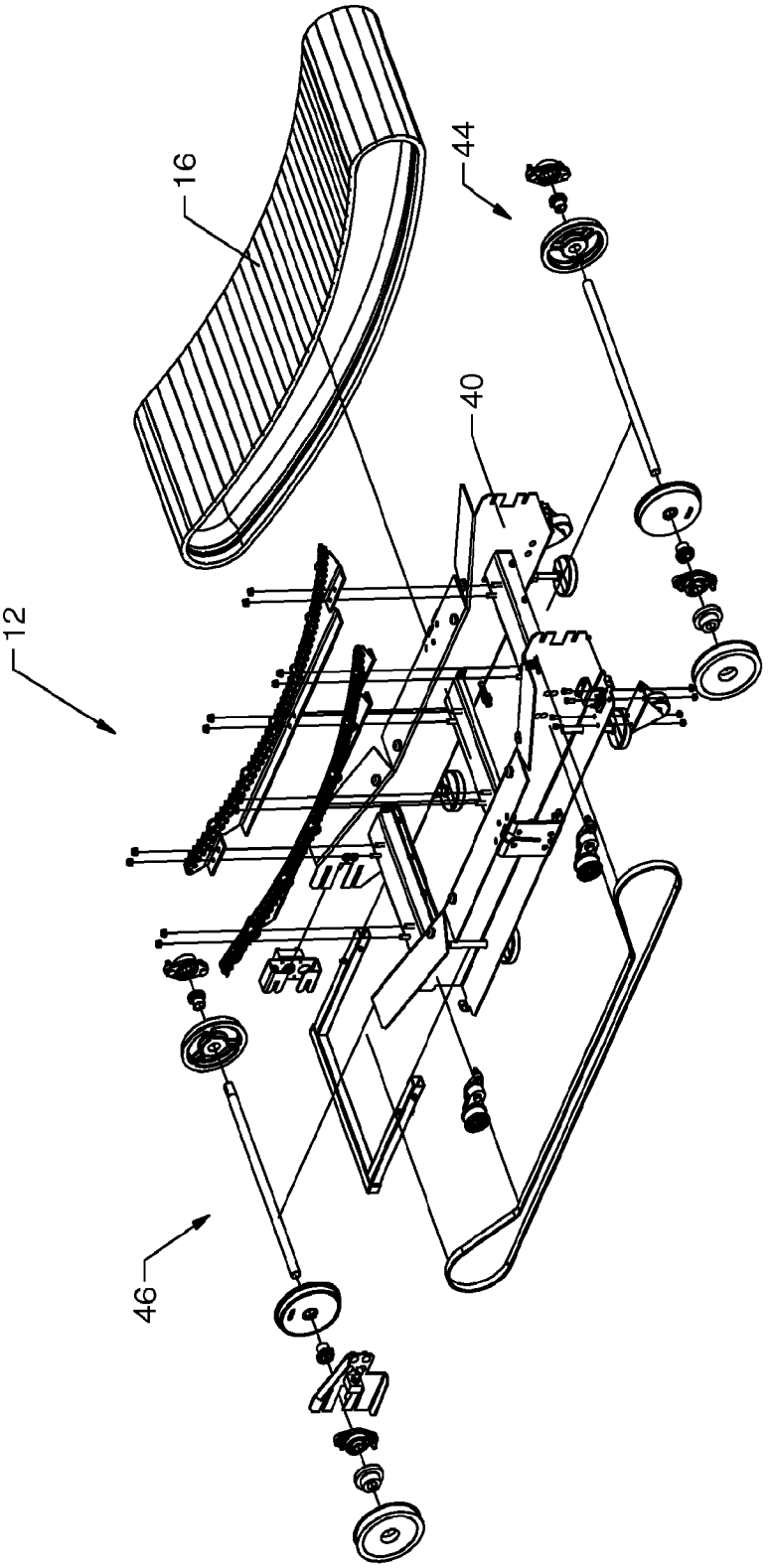

FIG. 6

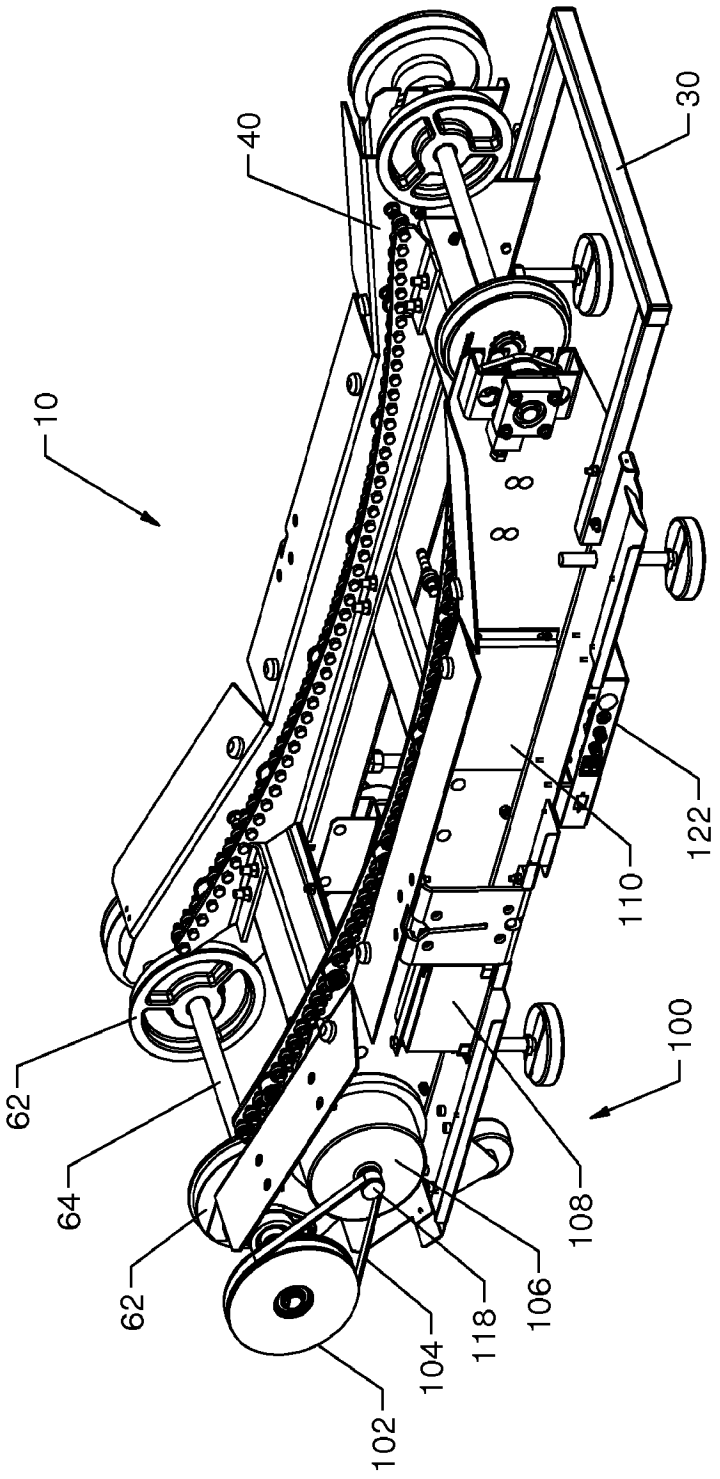

FIG. 7

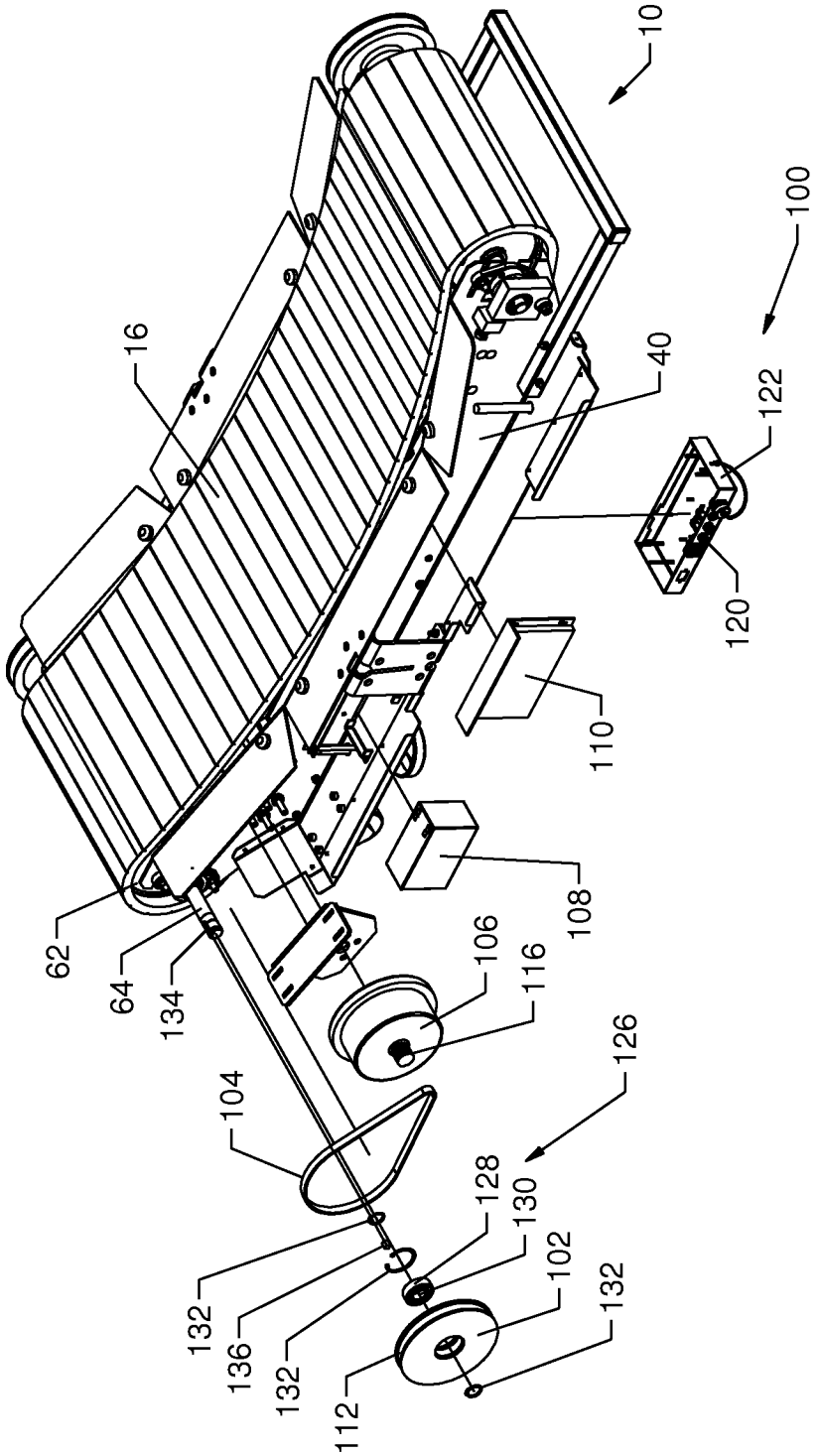
10
100
16
40
122
120
110
108
62
64
134
106
116
126
104
128
130
102
132
132
136
132
112

FIG. 8

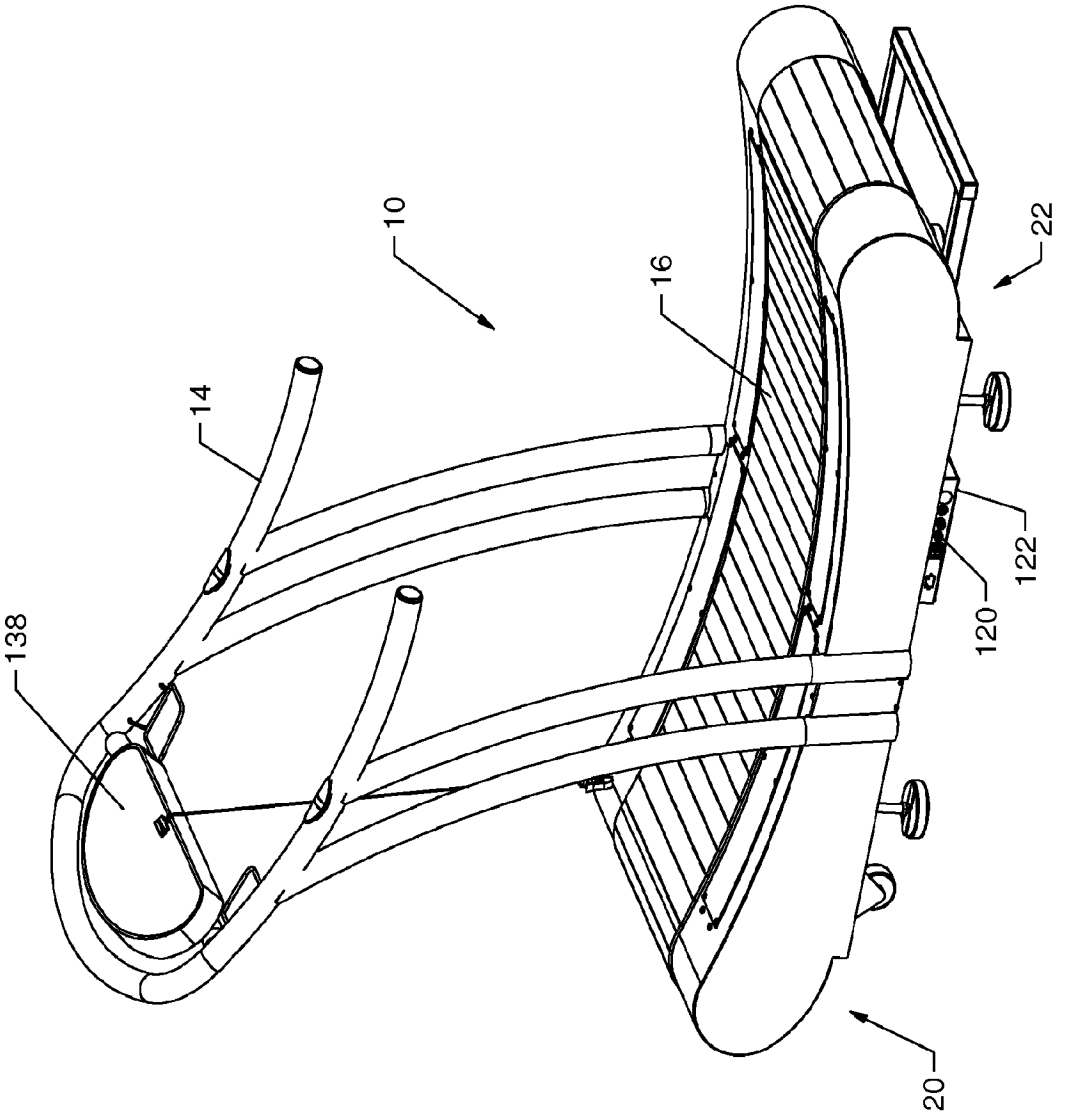

FIG. 9

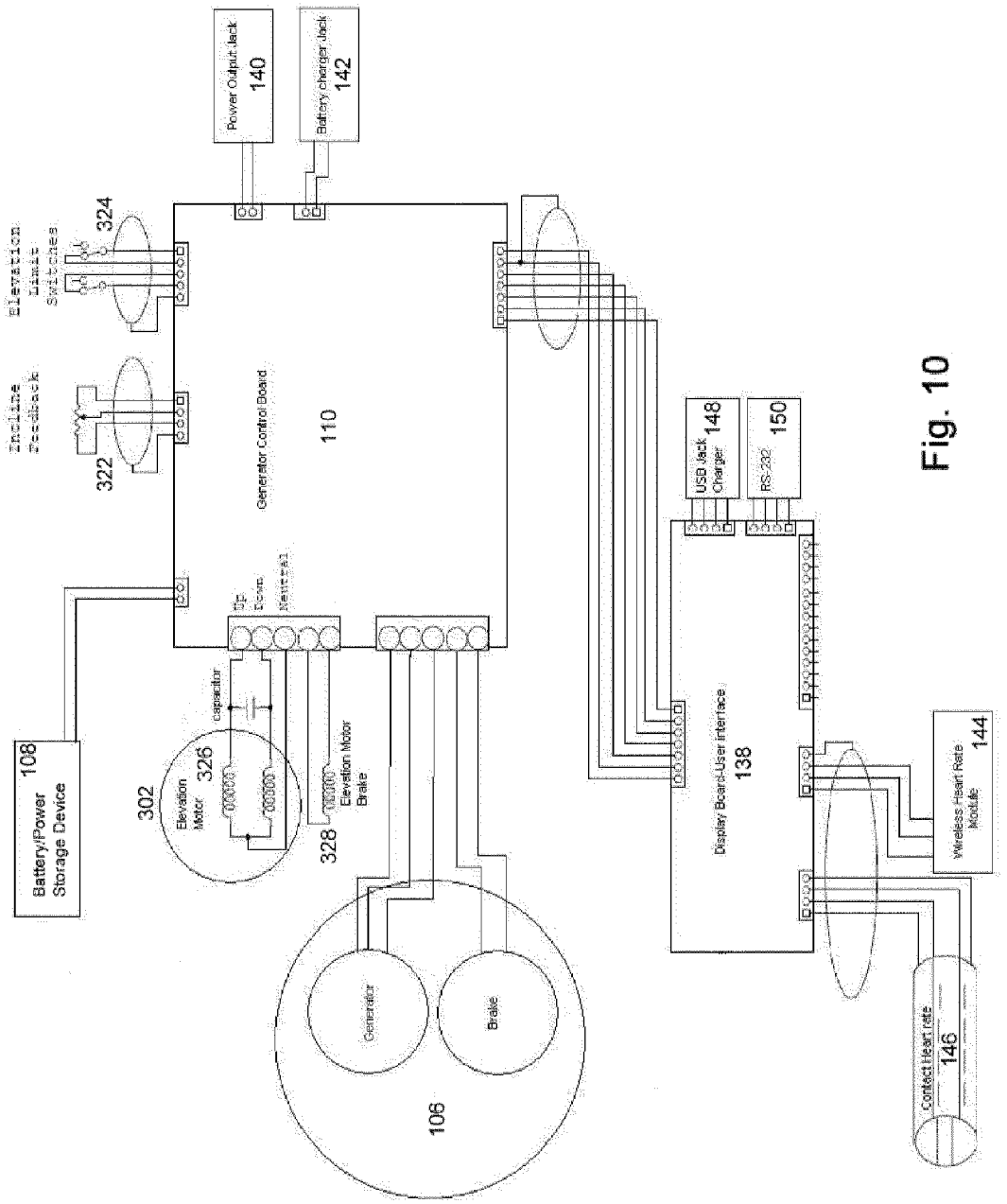
Power Output Jack
140
Battery charger Jack
142
Elevation Limit Switches
324
Incline Feedback
322
Generator Control Board
110
Battery/Power Storage Device
108
Capacitor
326
302
Elevation Motor
Elevation Motor Brake
328
Generator
Brake
106
USB Jack Charger
148
RS-232
150
Display Board-User interface
138
Wireless Heart Rate Module
144
Contact Heart rate
146

Fig. 10

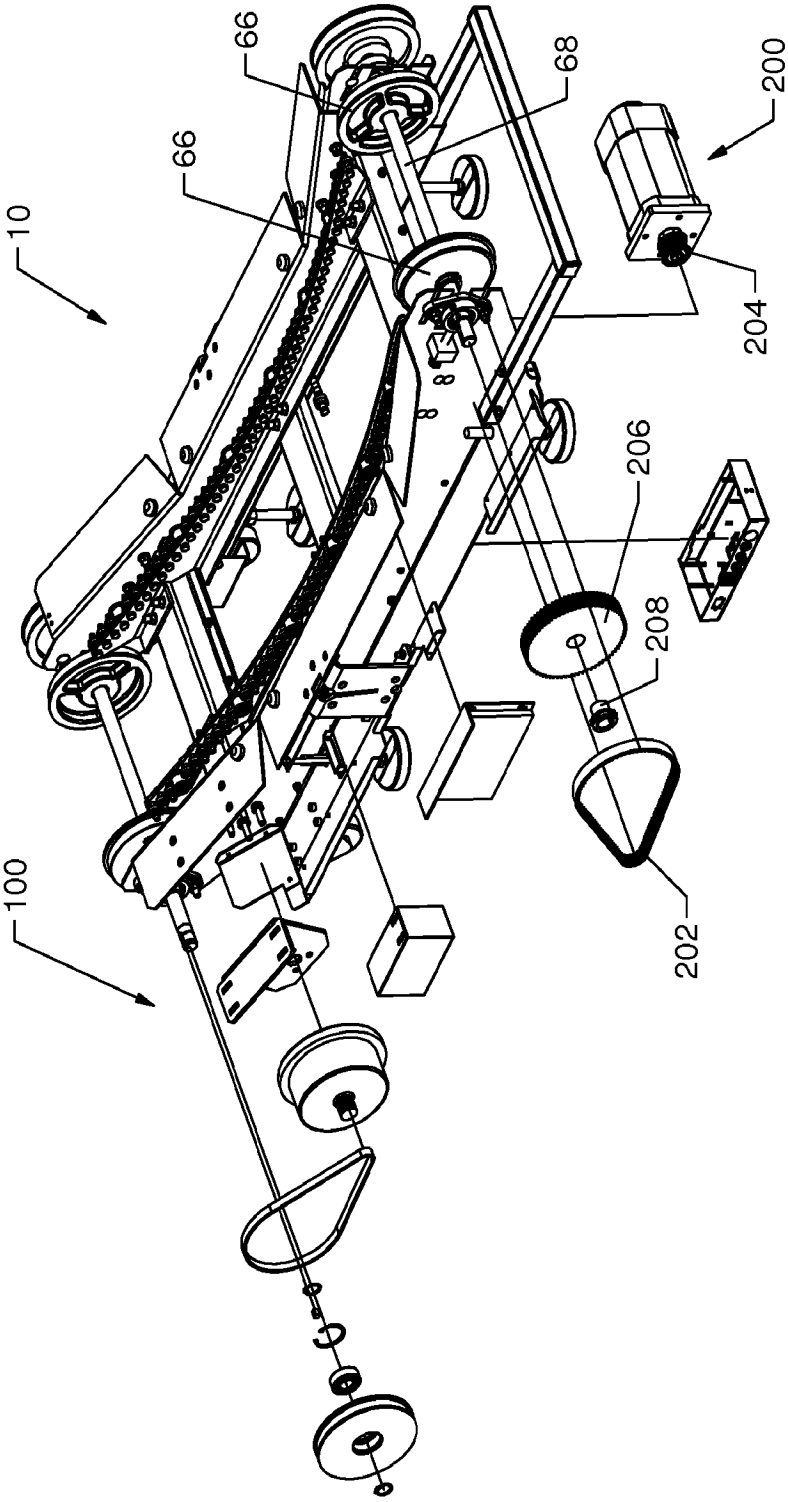

FIG. 11

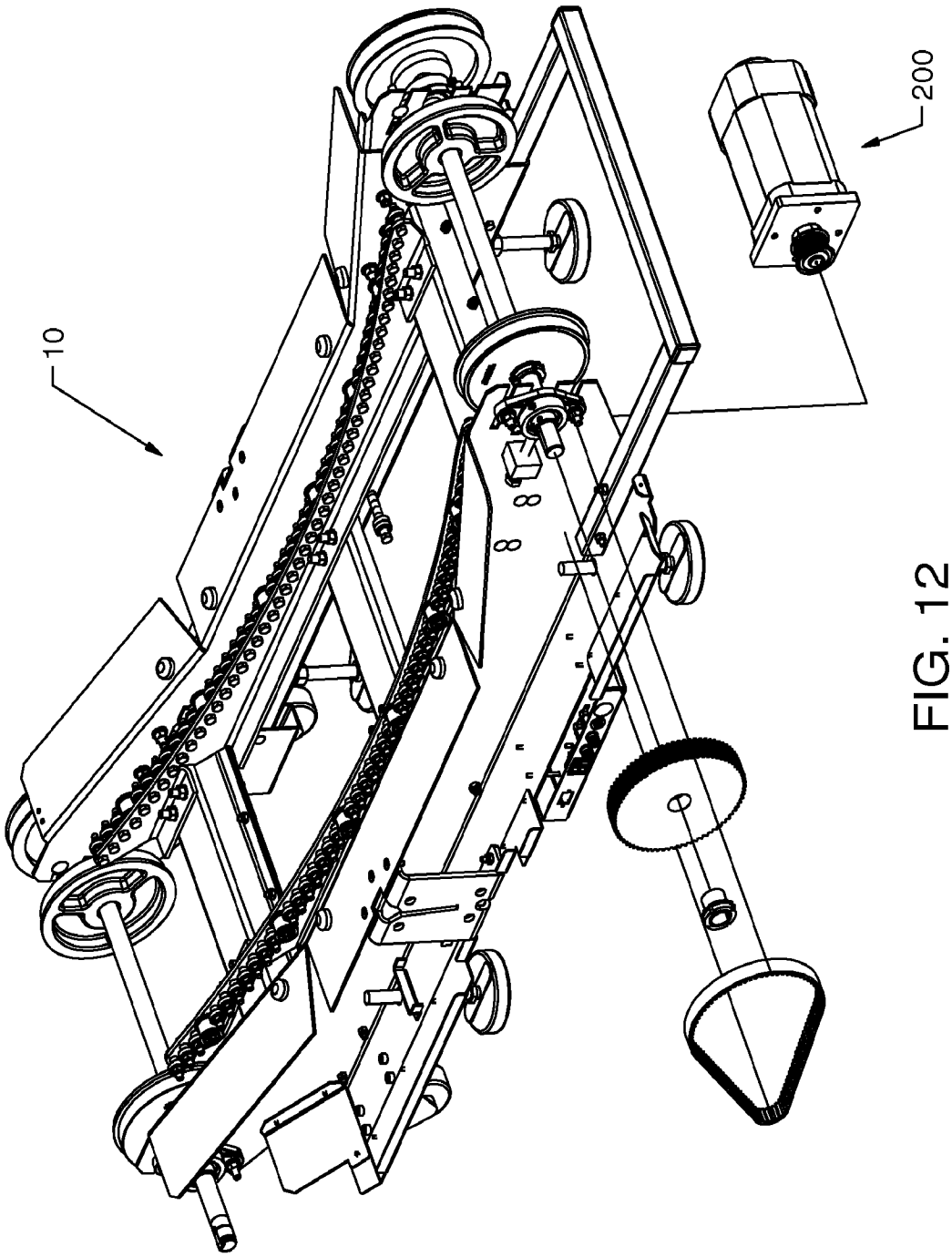

FIG. 12

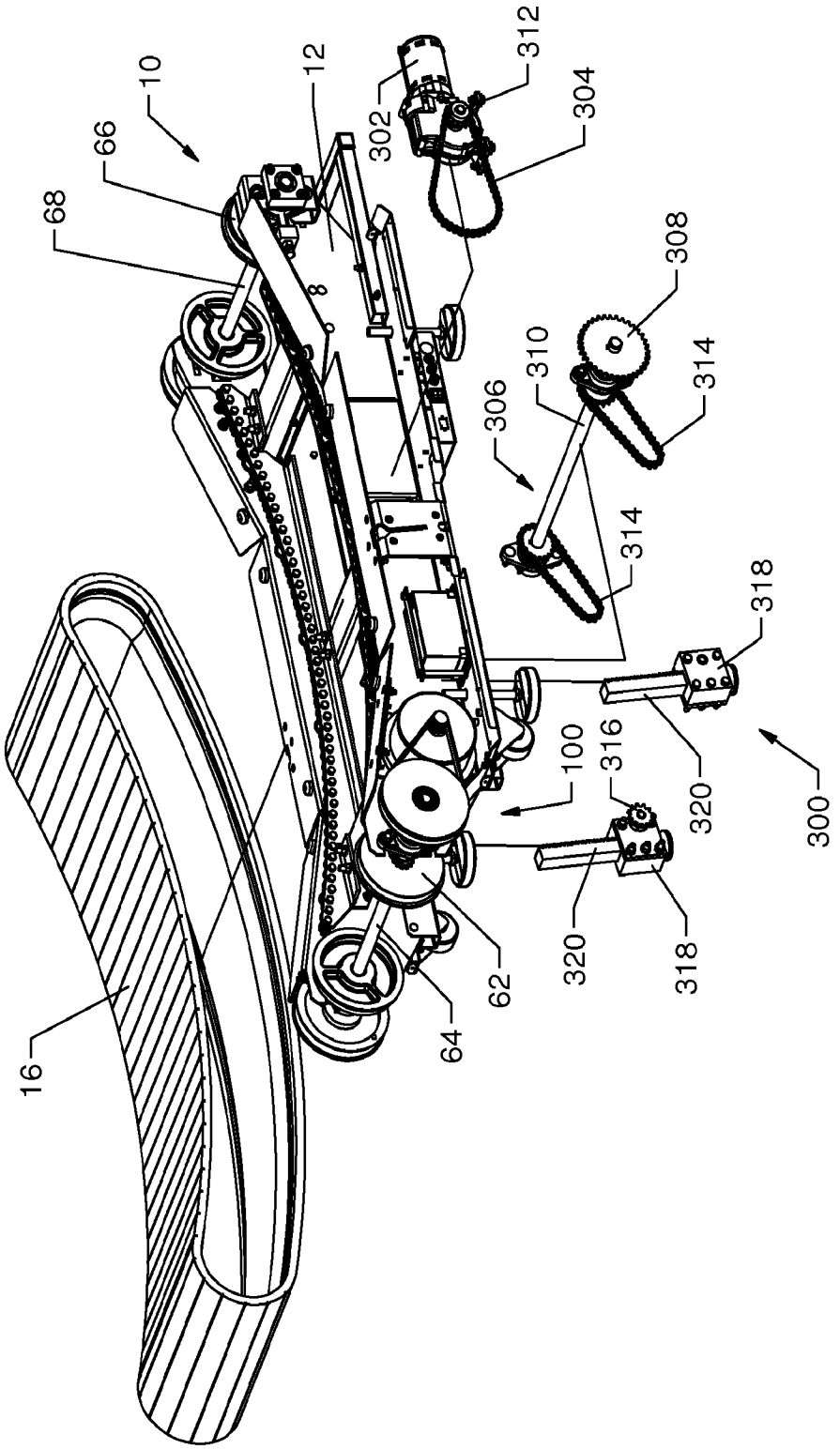
10
12
16
62
64
66
68
100
300
302
304
306
308
310
312
314
314
316
318
318
320
320

FIG. 13

POWER GENERATING MANUALLY OPERATED TREADMILL

CROSS-REFERENCE TO RELATED PATENT APPLICATIONS

This application is a continuation of prior international Application No. PCT/US10/26731, filed Mar. 9, 2010, which claims priority from U.S. Provisional Application Ser. No. 61/161,027, filed Mar. 17, 2009, which are incorporated herein by reference in their entirety.

BACKGROUND

The present invention relates generally to the field of treadmills. More specifically, the present invention relates to manual treadmills. Treadmills enable a person to walk, jog, or run for a relatively long distance in a limited space. It should be noted that throughout this document, the term "run" and variations thereof (e.g., running, etc.) in any context is intended to include all substantially linear locomotion by a person. Examples of this linear locomotion include, but is not limited to, jogging, walking, skipping, scampering, sprinting, dashing, hopping, galloping, etc.

A person running generates force to propel themselves in a desired direction. To simplify this discussion, the desired direction will be designated as the forward direction. As the person's feet contact the ground (or other surface), their muscles contract and extend to apply a force to the ground that is directed generally rearward (i.e., has a vector direction substantially opposite the direction they desire to move). Keeping with Newton's third law of motion, the ground resists this rearwardly directed force from the person, resulting in the person moving forward relative to the ground at a speed related to the force they are creating.

To counteract the force created by the treadmill user so that the user stays in a relatively static fore and aft position on the treadmill, most treadmills utilize a belt that is driven by a motor. The motor operatively applies a rotational force to the belt, causing that portion of the belt on which the user is standing to move generally rearward. This force must be sufficient to overcome all sources of friction, such as the friction between the belt and other treadmill components in contact therewith and kinetic friction, to ultimately rotate the belt at a desired speed. The desired net effect is that, when the user is positioned on a running surface of the belt, the forwardly directed velocity achieved by the user is substantially negated or balanced by the rearwardly directed velocity of the belt. Stated differently, the belt moves at substantially the same speed as the user, but in the opposite direction. In this way, the user remains at substantially the same relative position along the treadmill while running. It should be noted that the belts of conventional, motor-driven treadmills must overcome multiple, significant sources of friction because of the presence of the motor and configurations of the treadmills themselves.

Similar to a treadmill powered by a motor, a manual treadmill must also incorporate some system or means to absorb or counteract the forward velocity generated by a user so that the user may generally maintain a substantially static position on the running surface of the treadmill. The counteracting force driving the belt of a manual treadmill is desirably sufficient to move the belt at substantially the same speed as the user so that the user stays in roughly the same static position on the running surface. Unlike motor-driven treadmills, however, this force is not generated by a motor.

For most treadmill applications, it is desirable to integrate electrical components which provide feed back and data performance analysis such as speed, time, distance, calories burned, heart rate, etc. However, a manually operated treadmill which does not integrate a motor to drive the running belt may not incorporate a connection to a conventional electrical power source. Alternatively, it may be desirable to use the manually operated treadmill a relatively long distance from a conventional power source. For a whole host of environmental and practical reasons, there may be some benefit to creating a treadmill which is manually operated, but integrates a power generator to provide the necessary electrical power for operation of the treadmill or alternatively to generate power for the operation of other electrically powered products.

SUMMARY

One embodiment of the invention relates to a manually operated treadmill adapted to generate electrical power. The manually operated treadmill includes a treadmill frame, a running belt supported upon the treadmill frame and solely adapted for manual rotation, and an electrical power generator mechanically interconnected to the running belt and adapted to convert the manual rotational motion of the running belt into electrical power. The running belt includes a contoured running surface upon which a user of the treadmill may run, wherein the contoured running surface includes a first portion configured such that when a user's weight is applied to the first portion the running belt accelerates in a first direction of rotation.

Another embodiment of the invention relates to a treadmill including a treadmill frame, a support member rotationally supported upon the treadmill frame, a running belt supported by and interconnected to the support member and including a running surface upon which a user of the treadmill may run, the running belt being mounted solely for manual rotation about the support member. The treadmill further includes a pulley axially aligned with and interconnected with the support member, an electrical power generator adapted to convert rotational movement into electrical power, and a power transfer belt disposed about the pulley and interconnected with the electrical power generator so that the rotational movement of the support member is transferred to the electrical power generator which in turn creates electrical power.

Another embodiment of the invention relates a manually operated treadmill including a treadmill frame having a front end and a rear end opposite the front end, a front shaft rotatably coupled to the treadmill frame at the front end, a rear shaft rotatably coupled to the treadmill frame at the rear end, and a running belt disposed about the front and rear shafts and including a running surface upon which a user of the treadmill may run, such that force generated by the user causes rotation of the front shaft and the rear shaft, the running belt being mounted solely for manual rotation about the front and rear shafts. The treadmill further includes a one-way bearing configured to support a pulley on one of the front shaft and the rear shaft and to permit rotation of the pulley relative to the shaft in one rotational direction and resist rotation of the first pulley relative to the first shaft in the opposite rotational direction and an electrical power generator configured to convert rotational movement into electrical power, the electrical power generator interconnected with the pulley so that the rotational movement of the pulley is transferred to the electrical power generator which in turn creates electrical power.

BRIEF DESCRIPTION OF THE DRAWINGS

FIG. **1** is a perspective view of an exemplary embodiment of a manual treadmill having a non-planar running surface.

FIG. **2** is a left-hand partially exploded perspective view of a portion of the manual treadmill according to the exemplary embodiment shown in FIG. **1**.

FIG. **3** is a right-hand partially exploded perspective view of a portion of the manual treadmill according to the exemplary embodiment shown in FIG. **1**.

FIG. **4** is a partial side elevational view of the manual treadmill of FIG. **1** with a portion of the treadmill cut-away to show a portion of the arrangement of elements.

FIG. **5** is a cross-sectional view of a portion of the manual treadmill taken along line **5-5** of FIG. **1**.

FIG. **6** is an exploded view of a portion of the manual treadmill of FIG. **1** having the side panels and handrail removed.

FIG. **7** is a left-hand partially exploded perspective view of a portion of the manual treadmill according to the exemplary embodiment shown in FIG. **1** including a power generation system.

FIG. **8** is partially exploded view of a portion of the manual treadmill according to the exemplary embodiment shown in FIG. **7**.

FIG. **9** is perspective view of the manual treadmill according to the exemplary embodiment shown in FIG. **7**.

FIG. **10** is a electrical system diagram of the power generation system according to an electrical embodiment.

FIG. **11** is a left-hand partially exploded perspective view of a portion of the manual treadmill according to the exemplary embodiment shown in FIG. **1** including a power generation system and a drive motor.

FIG. **12** is a left-hand partially exploded perspective view of a portion of the manual treadmill according to the exemplary embodiment shown in FIG. **1** including a drive motor.

FIG. **13** is a left-hand partially exploded perspective view of a portion of the manual treadmill according to the exemplary embodiment shown in FIG. **1** a motorized elevation adjustment system.

DETAILED DESCRIPTION

Referring to FIG. **1**, a manual treadmill **10** generally comprises a base **12** and a handrail **14** mounted to the base **12** as shown according to an exemplary embodiment. The base **12** includes a running belt **16** that extends substantially longitudinally along a longitudinal axis **18**. The longitudinal axis **18** extends generally between a front end **20** and a rear end **22** of the treadmill **10**; more specifically, the longitudinal axis **18** extends generally between the centerlines of a front shaft and a rear shaft, which will be discussed in more detail below.

A pair of side panels **24** and **26** (e.g., covers, shrouds, etc.) are provided on the right and left sides of the base **12** to effectively shield the user from the components or moving parts of the treadmill **10**. The base **12** is supported by multiple support feet **28**, which will be described in greater detail below. A rearwardly extending handle **30** is provided on the rear end of the base **12** and a pair of wheels **32** are provided at the front end of the base **12**, however, the wheels **32** are mounted so that they are generally not in contact with the ground when the treadmill is in an operating position. The user can easily move and relocate the treadmill **10** by lifting the rear of the treadmill base **12** a sufficient amount so that the multiple support feet **28** are no longer in contact with the ground, instead the wheels **32** contact the ground, thereby permitting the user to easily roll the entire treadmill **10**. It should be noted that the left and right-hand sides of the treadmill and various components thereof are defined from the perspective of a forward-facing user standing on the running surface of the treadmill **10**.

Referring to FIGS. **2-6**, the base **12** is shown further including a frame **40**, a front shaft assembly **44** positioned near a front portion **48** of the frame **40**, and a rear shaft assembly **46** positioned near the rear portion **50** of frame **40**, generally opposite the front portion **48**. Specifically, the front shaft assembly **44** is coupled to the frame **40** at the front portion **48**, and the rear shaft assembly **46** is coupled to the frame **40** at the rear portion **48** so that the frame supports these two shaft assemblies.

The frame **40** comprises longitudinally-extending, opposing side members, shown as a left-hand side member **52** and a right-hand side member **54**, and one or more lateral or cross-members **56** extending between and structurally connecting the side members **52** and **54** according to an exemplary embodiment. Each side member **52**, **54** includes an inner surface **58** and an outer surface **60**. The inner surface **58** of the left-hand side member **52** is opposite to and faces the inner surface **58** of the right-hand side member **54**. According to other exemplary embodiments, the frame may have substantially any configuration suitable for providing structure and support for the manual treadmill.

Similar to most motor-driven treadmills, the front shaft assembly **44** includes a pair of front running belt pulleys **62** interconnected with, and preferably directly mounted to, a shaft **64**, and the rear shaft assembly **46** includes a pair of rear running belt pulleys **66** interconnected with, and preferably directly mounted to, a shaft **68**. The front and rear running belt pulleys **62**, **66** are configured to support and facilitate movement of the running belt **16**. The running belt **16** is disposed about the front and rear running belt pulleys **62**, **66**, which will be discussed in more detail below. As the front and rear running belt pulleys **62**, **66** are preferably fixed relative to shafts **64** and **68**, respectively, rotation of the front and rear running belt pulleys **62**, **66** causes the shafts **64**, **68** to rotate in the same direction.

As noted above, the manual treadmill disclosed herein incorporates a variety of innovations to translate the forward force created by the user into rotation of the running belt and permit the user to maintain a substantially static fore and aft position on the running belt while running. One of the ways to translate this force is to configure the running belt **16** to be more responsive to the force generated by the user. For example, by minimizing the friction between the running belt **16** and the other relevant components of the treadmill **10**, more of the force the user applies to the running belt **16** to propel themselves forward can be utilized to rotate the running belt **16**.

Another way to counteract the user-generated force and convert it into rotational motion of the running belt **16** is to integrate a non-planar running surface, such as non-planar running surface **70**. Depending on the configuration, non-planar running surfaces can provide a number of advantages. First, the shape of the non-planar running surface may be such that, when a user is on the running surface, the force of gravity acting upon the weight of the user's body helps rotate the running belt. Second, the shapes may be such that it creates a physical barrier to restrict or prevent the user from propelling themselves off the front end **20** of the treadmill **10** (e.g., acting essentially as a stop when the user positions their foot thereagainst, etc.). Third, the shapes of some of the non-planar running surfaces can be such that it facilitates the movement of the running belt **16** there along (e.g., because of the curvature, etc). Accordingly, the force the user applies to the running belt **16** is more readily able to be translated into rotation of the running belt **16**.

As seen in FIGS. **1** and **4-5**, the running surface **70** is generally non-planar and shown shaped as a substantially

complex curve according to an exemplary embodiment. The running surface can be generally divided up into three general regions, the front portion **72**, which is adjacent to the front shaft assembly **44**, the rear portion **74**, which is adjacent to the rear shaft assembly **46**, and the central portion **76**, which is intermediate the front portion **72** and the rear portion **74**. In the exemplary embodiment seen in FIGS. **1** and **4**, the running surface **70** includes a substantially concave curve **80** and a substantially convex curve **82**. At the front portion **72** of the running surface **70**, the relative height or distance of the running surface **70** relative to the ground is generally increasing moving forward along the longitudinal axis **18** from the central portion **76** toward the front shaft assembly **44**. This increasing height configuration provides one structure to translate the forward running force generated by the user into rotation of the running belt **16**. To initiate the rotation of the running belt **16**, the user places her first foot at some point along the upwardly-inclined front portion **72** of the running surface **70**. As the weight of the user is transferred to this first foot, gravity exerts a downward force on the user's foot and causes the running belt **16** to move (e.g., rotate, revolve, advance, etc.) in a generally clockwise direction as seen in FIG. **1** (or counterclockwise as seen in FIG. **4**). As the running belt **16** rotates, the user's first foot will eventually reach the lowest point in the non-planar running surface **70** found in the central portion **76**, and, at that point, gravity is substantially no longer available as a counteracting source to the user's forward running force. Assuming a typical gait, at this point the user will place her second foot at some point along the upwardly-inclined front portion **72** of the running belt **16** and begin to transfer weight to this foot. Once again, as weight shifts to this second foot, gravity acts on the user's foot to continue the rotation of the running belt **16** in the clockwise direction as seen in FIG. **1**. This process merely repeats itself each and every time the user places her weight-bearing foot on the running belt **16** at any position vertically above the lowest point of central portion **76** of the running surface **70** of the of the running belt **16**. The upwardly-inclined front portion **72** of the running belt **16** also acts substantially as a physical stop, reducing the chance the user can inadvertently step off the front end **20** of the treadmill **10**.

A user can generally control the speed of the treadmill **10** by the relative placement of her weight-bearing foot along the running belt **16** of the base **12**. Generally, the rotational speed of the running belt **16** increases as greater force is applied thereto in the rearward direction. The generally upward-inclined shape of the front portion **72** thus provides an opportunity to increase the force applied to the running belt **16**, and, consequently, to increase the speed of the running belt **16**. For example, by increasing her stride and/or positioning her weight-bearing foot vertically higher on the front portion **72** relative to the lowest portion of the running belt **16**, gravity will exert a greater and greater amount of force on the running belt **16** to drive it rearwardly. In the configuration of the running belt **16** seen in FIG. **1**, this corresponds to the user positioning her foot closer to the front end **20** of the treadmill **10** along the longitudinal axis **18**. This results in the user applying more force to the running belt **16** because gravity is pulling her mass downward along a greater distance when her feet are in contact with the front portion **72** of the running surface **70**. As a result, the relative rotational speed of the belt **16** and the relative running speed the user experiences is increased.

Another factor which will increase the speed the user experiences on the treadmill **10** is the relative cadence the user assumes. As the user increases her cadence and places her weight-bearing foot more frequently on the upwardly extending front portion **72**, more gravitational force is available to counteract the user-generated force, which translates into greater running speed for the user on the running belt **16**. It is important to note that speed changes in this embodiment are substantially fluid, substantially instantaneous, and do not require a user to operate electromechanical speed controls. The speed controls in this embodiment are generally the user's cadence and relative position of her weight-bearing foot on the running surface. In addition, the user's speed is not limited by speed settings as with a driven treadmill.

In the embodiment seen in FIGS. **1-6**, gravity is also utilized as a means for slowing the rotational speed of the running belt. At a rear portion **74** of the running surface **70**, the distance of the running surface **70** relative to the ground generally increases moving rearward along the longitudinal axis **18** from the lowest point in the non-planar running surface **70**. As each of the user's feet move rearward during her stride, the rear portion **74** acts substantially as a physical stop to discourage the user from moving too close to the rear end of the running surface. To this point, the user's foot has been gathering rearward momentum while moving from the front portion **72**, into the central portion **76**, and toward the rear portion **74** of the running surface **70**. Accordingly, the user's foot is exerting a significant rearwardly-directed force on the running belt **16**. Under Newton's first law of motion, the user's foot would like to continue in the generally rearward direction. The upwardly-inclined rear portion **74**, interferes with this momentum and provides a force to counter the rearwardly-directed force of the user's foot by providing a physical barrier. As the user's non-leading foot moves up the incline, the running surface **70** provides a force that counters the force of the user's foot, absorbing some of the rearwardly-directed force from the user and preventing it from being translated into increasing speed of the running belt **16**. Also, gravity acts on the user's weight bearing foot as it moves upward, exerting a downwardly-directed force on the user's foot that the user must counter to lift their foot and bring it forward to continue running. In addition to acting as a stop, the rear portion **74** provides a convenient surface for the user to push off of when propelling themselves forward, the force applied by the user to the rear portion **74** being countered by the force the rear portion **74** applies to the user's foot.

One benefit of the manual treadmill according to the innovations described herein is positive environmental impact. A manual treadmill such as that disclosed herein does not utilize electrical power to operate the treadmill or generate the rotational force on the running belt. Therefore, such a treadmill can be utilized in areas distant from an electrical power source, conserve electrical power for other uses or applications, or otherwise reduce the "carbon footprint" associated with the operation of the treadmill.

A manual treadmill according to the innovations disclosed herein can incorporate one of a variety of shapes and complex contours in order to translate the user's forward force into rotation of the running belt or to provide some other beneficial feature or element. FIGS. **1** and **4-5**, generally depict the curve defined by the running surface **70**, specifically, substantially a portion of a curve defined by a third-order polynomial equation. The front portion **72** and the central portion **76** define the concave curve **80** and the rear portion **74** of the running surface **70** defines the convex curve **82**. As the central portion **76** of the running surface **70** transitions to the rear portion **74**, the concave curve transitions to the convex curve. In the embodiment shown, the curvature of the front portion **72** and the central portion **76** is substantially the same; how-

ever, according to other exemplary embodiments, the curvature of the front portion **72** and the central portion **76** may differ.

According to an exemplary embodiment, the relative length of each portion of the running surface may vary. In the exemplary embodiment shown, the central portion is the longest. In other exemplary embodiments, the rear portion may be the longest, the front portion may be shorter than the intermediate portion, or the front portion may be longer than the rear portion, etc. It should be noted that the relative length may be evaluated based on the distance the portion extends along the longitudinal axis or as measured along the surface of the running belt itself.

One of the benefits of integrating one or more of the various curves or contours into the running surface is that the contour of the running surface can be used to enhance or encourage a particular running style. For example, a curve integrated into the front portion of the running surface can encourage the runner to run on the balls of her feet rather than a having the heel strike the ground first. Similarly, the contour of the running surface can be configured to improve a user's running biomechanics and to address common running induced injuries (e.g., plantar fasciitis, shin splints, knee pain, etc.). For example, integrating a curved contour on the front portion of the running surface can help to stretch the tendons and ligaments of the foot and avoid the onset of plantar fasciitis.

A conventional treadmill which uses an electrical motor to provide the motive force to rotate a running belt consumes electrical energy. However, a treadmill which is adapted to manually provide the motive force to rotate the running belt has the capability of generating electrical power by tapping into the motion of the running belt. FIGS. **7-10** show the treadmill **10** adapted to generate electrical power according to an exemplary embodiment.

In an exemplary embodiment of the innovations disclosed herein, a power generation system **100** comprises a drive pulley **102** preferably interconnected to the running belt **16**, a power transfer belt **104** interconnected to the drive pulley **102**, a generator **106** interconnected to the drive pulley **102**, an energy storage device shown as a battery **108** electrically connected to the generator **106**, and a generator control board **110** electrically connected to the battery **108** and generator **106**. The power generation system **100** is configured to transform the kinetic energy the treadmill user imparts to the running belt **16** to electrical power that may be stored and/or utilized to operate one or more electrically-operable devices (e.g., a display, a motor, a USB port, one or more heart rate monitoring pick-ups, a port for charging a mobile telephone or portable music device, etc.). It should be noted that, in some exemplary embodiments, energy storage devices other than batteries may be used (e.g., a capacitor, etc.).

The drive pulley **102** is coupled to a support element shown as the front shaft **64** such that the drive pulley **102** will generally move with substantially the same rotational velocity as the front shaft **64** when a user operates the treadmill **10** according to an exemplary embodiment. The power transfer belt **104** under suitable tension rotationally couples the drive pulley **102** to the generator **106**, thereby mechanically interconnecting the running belt **16** and the front shaft **64** to the generator **106**. The power transfer belt **104** is disposed or received at least partially about an exterior surface **112** of the drive pulley **102** and at least partially about an exterior surface **116** of an input shaft **118** of the generator **106**. Accordingly, as a user imparts rotational force to the running belt **16**, the running belt **16** transfers this force to the front running belt pulleys **62** and the front shaft **64** to which the front running belt pulleys **62** are mounted. Because the drive pulley **102** is mounted to the front shaft **64**, this element rotates with the front shaft **64**. This rotational force is transferred from the drive pulley **102** to the power transfer belt **104**, which is mounted under suitable tension on the drive pulley **102**, which in turn causes rotation of the generator input shaft **118**. Preferably, the diameter of the drive pulley **102** is larger than the diameter of the input shaft **118** of the generator **106**, so the input shaft **118** rotates with greater rotational velocity than the drive pulley **102**.

While this exemplary embodiment shows the drive pulley **102** coupled to the front shaft **64**, it is to be understood that the drive pulley **102** can be coupled to any part or portion of the treadmill which moves in response to the input from the user. For example, according to another exemplary embodiment, the drive pulley may be coupled to the rear shaft. According to still other exemplary embodiments, the drive pulley can be coupled to any support element that can impart motion thereto as a result of a user driving the running belt of the manual treadmill.

The generator **106** is electrically interconnected with the battery **108**, preferably by a conventional electrical wire (not shown). The generator **106** transforms the mechanical input from the running belt **16** into electrical energy. This electrical energy, produced by the generator **106** as a result of the manual rotation of the running belt **16**, is then stored in the battery **108**. The battery **108** can then be used to provide power to a wide variety of electrically-operable devices such as mobile telephones, portable music players, televisions, gaming systems, or performance data display devices. The generator depicted in FIGS. **7-8** is a conventional generator such as Model 900 as manufactured by Pulse Power Systems.

The battery **108** is electrically coupled to one or more outlets or jacks **120**, preferably by a conventional electrical wire (not shown), and the jacks **120** are mounted to the treadmill frame **40** by a bracket **122**. One or more of the jacks **120** are configured to receive an electrical plug or otherwise output power so that electrical power may be transferred from the battery **108** to an electrically-operable device.

In use, as the user imparts rotational force to the running belt **16**, this force is input into the generator **106** as a result of the cooperation of the front shaft **64**, the drive pulley **102**, the power transfer belt **104** and the generator input shaft **118**. This rotation of the generator input shaft **118** results in the creation of electrical power which is typically input into the battery **108** if the user is traveling at a speed equal to or greater than a predetermined speed, the predetermined speed being determined by the configuration of the power generation system **100**.

In order to ensure that the rotational momentum inherent in the mass of the generator does not adversely impact the user's variable speed of rotation of the running belt **16** (and vice-versa), a motion restricting element shown as a one-way bearing **126** is preferably coupled to or incorporated with the power generator system **100** according to an exemplary embodiment. The one-way bearing **126** is configured to permit rotation of the drive pulley **102** in only one direction. The one-way bearing **126** is shown press fit into the drive pulley **102**, having an inner ring **128** fixed relative to the front shaft **64** and an outer ring **130** fixed relative to the drive pulley **102**. One or more snap rings **132** are provided to establish the side-to-side location of the drive pulley **102** and one-way bearing **126** along the front shaft **64**, though, securing elements other than or in addition to the snap rings may also be used. According to other exemplary embodiments, the motion-restricting element may be any suitable motion-restricting element (e.g., a cam system, etc.).

The front shaft **64** further includes a keyway **134** formed therein that cooperates with a key **136** of the one-way bearing **126** to help impart the motion of the front shaft **64** to the drive pulley **102** according to an exemplary embodiment. As a user imparts rotational force (e.g., the clockwise direction as shown in FIGS. **7-8**) to the running belt **16**, the running belt **16** causes the front running belt pulleys **62** and the drive shaft **64** to rotate. The key **136** of the one-way bearing **126**, which is press fit into the drive pulley **102**, cooperates with the keyway **134** formed in the front shaft **64**, causing the drive pulley **102** to rotate as a result of the rotation of the front shaft **64**. Stated otherwise, the rotational force of the front shaft **64** is transferred to the drive pulley **102** by the interaction of the keyway **134** and the key **136** of the one-way bearing **126**, causing the drive pulley **102** to rotate.

As a user drives the treadmill **10**, the generator **106** develops inertia. This inertia is desirably accommodated when a user of the treadmill **10** slows down or stops. The one-way bearing **126** is used to accommodate this inertia in the exemplary embodiment shown. The outer ring **128** of the one-way bearing **126** is rotatable in a clockwise direction (as seen in FIGS. **7-8**) independent of the inner ring **130**. As the user located on the running belt **16** slows, the front shaft **64** slows. Despite the slowing of the front shaft **64**, the one-way bearing **126** allows the drive pulley **102** and elements mechanically coupled thereto, the power transfer belt **104** and the generator **106**, to continue rotating until, as a result of friction and gravity, the rotation (or lack thereof) of the running belt **16** matches the rotation of the drive pulley **102**, power transfer belt **104**, generator input shaft **118** and internal elements of the generator **106** coupled thereto. In this way, the one-way bearing helps prevent the generator **106** from being damaged by the user stopping too quickly and/or the preventing a loss of user control over the speeding up and slowing down of the treadmill **10**.

In the exemplary embodiment shown in FIGS. **8** and **9**, the battery **108** is electrically interconnected with a display **138** by a conventional electrical wire, providing power thereto during operation of the treadmill **10**. The generator control board **110** interfaces with the generator **106** and the display **138** in order to regulate the power provided to the display **138** and/or other electrically-operable devices coupled to the generator **106**. The display **138** is configured to provide the performance-related data to the user in a user-readable format which may include, but is not limited to, operation time, current speed, calories burned, power expended, maximum speed, average speed, heart rate, etc.

According to an exemplary embodiment, the display **138** cooperates with the power generation system **100** to allow a user to enter and establish a maximum speed. For example, a user may enter a maximum speed of 5 mph using the controls of the display **138**. The information regarding the maximum speed is provided by the control board of the display **138** to the generator control board **110**. When the user reaches 5 mph, a braking system incorporated with the generator **106** will engage and limit the speed at which the running belt **16** can move. In these exemplary embodiments, the braking system of the generator **106** limits the speed at which the running belt **16** can move by controlling the speed at which the input shaft **118** can rotate. In this embodiment, when the generator control board **110** recognizes that the generator **106** is operating at a level that exceeds the level that corresponds to a speed of 5 mph, the generator control board **110** will operably prevent the input shaft **118** from rotating with a rotational velocity that will exceed 5 mph. By controlling the rotational velocity of the input shaft **118**, the rotational velocity of the drive pulley **102** can be slowed or limited via the power transfer belt **104**, thereby slowing or limiting the rotational speed of the front shaft **64**, the front running belt pulley **62**, and finally the running belt **16**. According to one exemplary embodiment, the braking system incorporated with the generator **106** is an eddy current braking system including one or more magnets. When the generator control board **110** signals the generator **106** that the maximum speed has been exceeded, more voltage is directed from the generator control board **110** to the generator **106**, causing the magnets of the eddy current braking system to apply a greater force to the input shaft, making it more difficult to impart rotation thereto.

The one-way bearing **126** is mounted to accommodate this braking system. As noted previously, the one-way bearing **126** freely permits rotation in the clockwise direction as seen in FIGS. **8** and **9** of running belt relative to the drive pulley **102**, power transfer belt **104** and generator input shaft **118**, but restricts or prevents rotation in the counterclockwise direction as seen in FIGS. **8** and **9** of running belt **16** relative to the drive pulley **102**, power transfer belt **104** and generator input shaft **118**. So, as a user increases the speed of rotation of the running belt **16**, the one-way bearing **126** is engaged so that the speed of rotation of the drive pulley **102**, power transfer belt **104** and generator input shaft **118** similarly increase. If the user slows down the speed of rotation before hitting the maximum speed input as noted above, the one-way bearing **126** will disengage or release so that the relative inertia of rotation of the generator **106** along with the drive pulley **102**, power transfer belt **104** and generator input shaft **118** will not interfere with the user slowing the speed of rotation of the running belt. However, if the user increases the speed of rotation up to the maximum speed, the braking system integrated into the generator **108** will eventually restrict the rotation of the drive pulley **102**, power transfer belt **104** and generator input shaft **118**. As the user attempts to increase the speed of rotation of the running belt **16** beyond the maximum speed the brake within the generator **108** will restrict the speed of rotation of the generator input shaft **118** which will in turn translate this speed restriction to the power transfer belt **104** and drive pulley **102**. The continued urging of the user to increase the speed of the running belt **16** causes the one-way bearing **126** to remain engaged thereby limiting the speed of rotation of the shaft **64** to that of the drive pulley **102**. Once the maximum speed is met, the user will be forced to reduce the speed, otherwise, she will have excess forward velocity.

FIG. **10** provides a system diagram of the power generation system **100**. The power generation system **100** is shown including two electrically connected control boards, the generator control board **110** and the control board incorporated with the display **138**.

As discussed above, the generator control board **110** electrically connects the generator **106**, the battery **108**, and the one or more jacks **120**. In the exemplary embodiment shown, the jacks **120** include a first jack **140** configured to output DC power to electrically operable devices or equipment and a second jack **142** configured to connect to a charging device suitable for recharging the battery **108** if it is fully discharged.

The control board of the display **138** electrically connects one or more sensors adapted monitor the user's heart rate and one or more jacks or ports for interconnecting electrical devices according to an exemplary embodiment. In the exemplary embodiment shown in FIG. **10**, the sensors adapted to monitor the user's heart rate include a first wireless heart monitor **144** that monitors the user's heart rate from a conventional chest strap and a second contact heart monitor **146** that monitors the user's heart rate when the user's hands are positioned on one or more sensor plates or surfaces (e.g., a

sensor plate on the handrail **14**). The one or more jacks or ports are shown as a USB jack charger **148** configured to connect to and charge any of a variety of devices chargeable via a USB connector and a port shown as an RS-232 port **150**, which enables data gathered and stored by the treadmill **10** to be downloaded into a computer.

In the exemplary embodiment shown, the drive pulley **102**, the power transfer belt **104**, the generator **106**, the battery **108**, and the generator control board **110** are shown disposed proximate to the left-hand side member **52**. In another exemplary embodiment, these components are disposed proximate the outer surface **60** of the right-hand side member **54**. According to other exemplary embodiments, one or more of the components may be disposed on opposite sides of the frames **40** and/or at other locations.

Referring to FIG. **11**, a drive motor **200** may be used with or integrated with the power generation system **100** according to an exemplary embodiment. The drive motor **200** is configured to help drive the running belt **16** in certain circumstances. For example, the user may select a setting wherein the running belt **16** is to be maintained at a desired speed and does not rely on the user to drive the running belt **16**. In the exemplary embodiment shown, the drive motor **200** does not receive power from the battery **108** in order to operate. Rather, the drive motor that has its own power source that is electrically independent of the power generation system **100**. However, in other exemplary embodiments, the drive motor may receive power from a power storage device (e.g., battery **108**) of the power generation system in order to operate.

Referring further to FIG. **11**, the drive motor **200** is operably coupled to the running belt **16** by a motor belt **202** according to an exemplary embodiment. The motor belt **202** extends about an output shaft **204** of the drive motor **200** and a second drive pulley **206** that is coupled to the rear shaft **68** by a centrally-disposed bushing **208**. When the output shaft **204** of the drive motor **200** rotates, it imparts rotational motion to the motor belt **202**, which, in turn imparts rotational motion to the second drive pulley **206**. The second drive pulley **206**, being substantially fixed relative to the rear shaft **68**, causes the rear shaft **68** to rotate. The rotation of the rear shaft **68** then causes the rear running belt pulleys **66** and the running belt **16** to rotate.

According to an exemplary embodiment, the treadmill **10** includes two drive motors, one associated with each of the front shaft **64** and the rear shaft **68**. Among other applications, the drive motors may be used to control the relative speeds of the front shaft **64** and the rear shaft **68**. Typically, the relative speed of the front shaft **64** and the rear shaft **68** is controlled to synchronize the rotational velocities of the shafts.

Referring to FIG. **12**, the treadmill **10** includes one or more drive motors **200**, but does not include a power generation system according to an exemplary embodiment.

Referring to FIG. **13**, the treadmill **10** includes a motor **302** configured to provide power to an elevation adjustment system **300** according to an exemplary embodiment. The motor **302** may be used to alter the incline of the base **12** of the treadmill **10** relative to the ground. The front shaft **64** may be lowered relative to the rear shaft **68** and/or the front shaft **64** may be raised relative to the rear shaft **68** using electrical controls. Further, a user may not have to dismount from the treadmill in order to impart this adjustment. For example, the elevation adjustment system may include controls that are integral with the above-discussed display **134**. Alternatively, the controls may be integrated with the handrail **14** or be disposed at another location that is easily accessed by the user when operating the treadmill **10**. In some exemplary embodiments, the motor for the elevation adjustment system is at least in-part powered by a power storage device (e.g., battery **108**) of the power generation system.

FIG. **13** illustrates a number of components of the exemplary elevation adjustment system **300**. When assembled, a drive belt or chain **304** of the drive motor **302** is operably connected to an internal connecting shaft assembly **306** at a sprocket **308**. The sprocket **308** is fixed relative to an internal connecting shaft **310** of the internal connecting shaft assembly **306**. By imparting rotational motion to the drive belt or chain **304** via an output shaft **312**, the drive motor **200** causes the sprocket **308** and the internal connecting shaft **310** to rotate. The internal connecting shaft assembly **306** further includes a pair of drive belts or chains **314** that are operably coupled to gears **316** of rack and pinion blocks **318**. The rotation of the internal connecting shaft **310** causes the drive belts or chains **314** to rotate gears **316**. As the gears **316** rotate, a pinion (not shown) disposed within the rack and pinion blocks **318** imparts linear motion to the racks **320**, thereby operably raising or lowering the base **12** of the treadmill **10** depending on the direction of rotation of the output shaft **312** of the drive motor **302**. According to other exemplary embodiments, any suitable linear actuator may serve as an elevation adjustment system for the manual treadmill disclosed herein.

Referring back to FIG. **10**, the generator control board **110** also electrically connects components of an elevation adjustment system **300**. Specifically, the generator control board **110** electrically connects the motor **302** of the elevation adjustment system **300**, an incline feedback system **322** including a potentiometer that is conventional in the art, and one or more elevation limit switches **324** which limit the maximum and minimum elevation of the base **12** of the treadmill by acting as a safety stop. The motor **302** is further shown incorporating a capacitor start module **326** and an electromechanical brake **328**, which are also electrically connected to the generator control board **110**.

As utilized herein, the terms "approximately," "about," "substantially," and similar terms are intended to have a broad meaning in harmony with the common and accepted usage by those of ordinary skill in the art to which the subject matter of this disclosure pertains. It should be understood by those of skill in the art who review this disclosure that these terms are intended to allow a description of certain features described and claimed without restricting the scope of these features to the precise numerical ranges provided. Accordingly, these terms should be interpreted as indicating that insubstantial or inconsequential modifications or alterations of the subject matter described and are considered to be within the scope of the disclosure.

It should be noted that the term "exemplary" as used herein to describe various embodiments is intended to indicate that such embodiments are possible examples, representations, and/or illustrations of possible embodiments (and such term is not intended to connote that such embodiments are necessarily extraordinary or superlative examples).

For the purpose of this disclosure, the term "coupled" means the joining of two members directly or indirectly to one another. Such joining may be stationary or moveable in nature. Such joining may be achieved with the two members or the two members and any additional intermediate members being integrally formed as a single unitary body with one another or with the two members or the two members and any additional intermediate members being attached to one another. Such joining may be permanent in nature or may be removable or releasable in nature.

It should be noted that the orientation of various elements may differ according to other exemplary embodiments, and that such variations are intended to be encompassed by the present disclosure.

It is important to note that the constructions and arrangements of the manual treadmill as shown in the various exemplary embodiments are illustrative only. Although only a few embodiments have been described in detail in this disclosure, those skilled in the art who review this disclosure will readily appreciate that many modifications are possible (e.g., variations in sizes, dimensions, structures, shapes and proportions of the various elements, values of parameters, mounting arrangements, use of materials, colors, orientations, etc.) without materially departing from the novel teachings and advantages of the subject matter recited in the claims. For example, elements shown as integrally formed may be constructed of multiple parts or elements, the position of elements may be reversed or otherwise varied, and the nature or number of discrete elements or positions may be altered or varied. The order or sequence of any process or method steps may be varied or re-sequenced according to alternative embodiments. Other substitutions, modifications, changes and omissions may also be made in the design, operating conditions and arrangement of the various exemplary embodiments without departing from the scope of the present disclosure.

What is claimed is:

1. A manually operated treadmill adapted to generate electrical power comprising:

a treadmill frame;

a running belt supported upon the treadmill frame and solely adapted for manual rotation, the running belt including a contoured running surface upon which a user of the treadmill may run, wherein the contoured running surface includes a first portion configured such that when a user's weight is applied to the first portion the running belt accelerates in a first direction of rotation; and

an electrical power generator mechanically interconnected to the running belt and adapted to convert the manual rotational motion of the running belt into electrical power.

2. The manually operated treadmill of claim **1** and further comprising a battery electrically connected to the generator and adapted to store the electrical power produced by the generator as a result of the manual rotation of the running belt.

3. The manually operated treadmill of claim **2** and further comprising an electrical outlet electrically connected to the battery, the outlet being adapted to be electrically connected to another electrically powered device.

4. The manually operated treadmill of claim **3** wherein the electrical outlet is adapted to receive a USB connection.

5. The manually operated treadmill of claim **2** and further comprising an electrical display panel being adapted to display performance data and which is electrically connected to the battery so that the battery is the sole source of electrical power for the display panel.

6. The manually operated treadmill of claim **1** and further comprising a braking system coupled to the generator and adapted to limit the speed of rotation of the running belt;

wherein the braking system utilizes eddy currents from the generator to generate a braking force on the running belt.

7. The manually operated treadmill of claim **1** and further comprising a braking system adapted to limit the speed of rotation of the running belt, wherein the braking system is adapted to limit the speed of rotation to a predetermined value, and wherein the braking system is further adapted to simultaneously permit rotation of the running belt at a speed less than the predetermined value.

8. The manually operated treadmill of claim **7**, wherein the braking system is coupled to the generator and utilizes eddy currents from the generator to generate a braking force on the running belt.

9. The manually operated treadmill of claim **1**, wherein the contoured running surface includes a second portion configured such that when a user's weight is applied to the second portion the running belt accelerates in a second direction of rotation substantially opposite the first direction.

10. The manually operated treadmill of claim **1** and further comprising:

a front support member rotatably coupled to the treadmill frame, the front support member comprising the forwardmost support for the running belt; and

a rear support member rotatably coupled to the treadmill frame, the rear support member comprising the rearwardmost support for the running belt;

wherein the running surface comprises at least in part a complex curve located intermediate the front support member and the rear support member and incorporating a minimum of two geometric configurations.

11. The treadmill of claim **10** and further comprising:

a height adjusting motor supported by the treadmill frame and electrically powered by the generator; and

at least one height adjustable foot supported by the treadmill frame and interconnected to the height adjusting motor, the at least one height adjusting foot being adapted to alter the incline relative to the frame of at least a portion of the running belt in response to operation of the height adjusting motor.

12. The manually operated treadmill of claim **1**, wherein the treadmill comprises a forward end and a rearward end opposite the forward end, and wherein a forward end of the running surface is configured to inhibit a user from inadvertently stepping off the forward end of the treadmill.

13. The manually operated treadmill of claim **1**, wherein the treadmill comprises a forward end and a rearward end opposite the forward end, and wherein a rearward end of the running surface is configured to inhibit a user from inadvertently stepping off the rearward end of the treadmill.

14. The manually operated treadmill of claim **1**, wherein the treadmill is configured to control the speed of the running belt to facilitate the maintenance of the contour of the curved running surface.

15. A treadmill comprising:

a treadmill frame;

a support member rotationally supported upon the treadmill frame;

a running belt supported by and interconnected to the support member and including a running surface upon which a user of the treadmill may run, the running belt being mounted solely for manual rotation about the support member;

a pulley axially aligned with and interconnected with the support member;

an electrical power generator adapted to convert rotational movement into electrical power;

a power transfer belt disposed about the pulley and interconnected with the electrical power generator so that the rotational movement of the support member is transferred to the electrical power generator which in turn creates electrical power; and

a first shaft supported upon the treadmill frame and rotationally interconnected to the running belt, the support member and the pulley being mounted to the first shaft.

16. The treadmill of claim **15** and further comprising:

a second shaft supported upon the treadmill frame and rotationally interconnected to the running belt at an end of the treadmill opposite the first support member;

wherein the force generated by a user causes the running belt to rotate about the first shaft and the second shaft, and wherein the generator is disposed intermediate the first shaft and the second shaft.

17. The treadmill of claim **15** and further comprising a braking system coupled to the generator and adapted to limit the speed of rotation of the running belt.

18. The treadmill of claim **17** and further comprising a one way bearing adapted to support the pulley on the first shaft and permit rotation of the first pulley relative to the first shaft in one rotational direction and resist rotation of the first pulley relative to the first shaft in the opposite rotational direction.

19. The treadmill of claim **15** and further comprising:

an electrical display panel electrically interconnected with the generator so that the electrical power necessary to operate the electrical display panel is supplied by the power generator; and

a battery electrically connected to the power generator and to the electrical display panel, the battery configured to store the electrical power produced by the generator as a result of the manual rotation of the running belt.

20. A manually operated treadmill comprising:

a treadmill frame having a front end and a rear end opposite the front end;

a front shaft rotatably coupled to the treadmill frame at the front end;

a rear shaft rotatably coupled to the treadmill frame at the rear end;

a running belt disposed about the front and rear shafts and including a running surface upon which a user of the treadmill may run, such that force generated by the user causes rotation of the front shaft and the rear shaft, the running belt being mounted solely for manual rotation about the front and rear shafts;

a one-way bearing configured to support a pulley on one of the front shaft and the rear shaft and to permit rotation of the pulley relative to the shaft in one rotational direction and resist rotation of the first pulley relative to the first shaft in the opposite rotational direction; and

an electrical power generator configured to convert rotational movement into electrical power, the electrical power generator interconnected with the pulley so that the rotational movement of the pulley is transferred to the electrical power generator which in turn creates electrical power.

21. The manually operated treadmill of claim **20**, wherein the one-way bearing is configured to allow rotation of the pulley at a first speed and rotation of the shaft at a second speed, the second speed being less than the first speed.

22. The manually operated treadmill of claim **20** and further comprising a braking system coupled to the generator and adapted to limit the speed of rotation of the running belt.

23. The manually operated treadmill of claim **22**, wherein the braking system utilizes eddy currents from the generator to generate a braking force on the running belt.

24. The manually operated treadmill of claim **22**, wherein the braking system is adapted to limit the speed of rotation to a predetermined value.

25. The manually operated treadmill of claim **24**, wherein the braking system is further adapted to simultaneously permit rotation of the running belt at a speed less than the predetermined value.

26. A method of providing power to an electrical display panel comprising the steps:

providing;

a treadmill frame;

a support member rotationally supported upon the treadmill frame;

a running belt supported by and interconnected to the support member, the running belt being mounted solely for manual rotation about the support member;

an electrical power generator supported on the treadmill frame being adapted to convert rotational movement into electrical power;

a power transfer belt adapted to interconnect the electrical power generator and the support member via a pulley axially aligned with and interconnected with the support member so that the rotational movement of the support member is transferred to the electrical power generator which in turn creates electrical power;

an electrical display panel being adapted to calculate and display performance data relating to operation of the treadmill; and

a first shaft supported upon the treadmill frame and rotationally interconnected to the running belt, the support member and the pulley being mounted to the first shaft; and

electrically interconnecting the electrical power generator to a display panel so that the electrical power necessary to operate the electrical display panel is supplied by the power generator.

* * * * *

United States of America

United States Patent and Trademark Office

CURVE

Reg. No. 3,785,961

Registered May 4, 2010

Int. Cl.: 28

TRADEMARK

PRINCIPAL REGISTER

WOODWAY USA, INC. (WISCONSIN CORPORATION)
W229 N591 FOSTER COURT
WAUKESHA, WI 53186

FOR: EXERCISE TREADMILLS, IN CLASS 28 (U.S. CLS. 22, 23, 38 AND 50).

FIRST USE 1-0-2010; IN COMMERCE 1-0-2010.

THE MARK CONSISTS OF STANDARD CHARACTERS WITHOUT CLAIM TO ANY PARTICULAR FONT, STYLE, SIZE, OR COLOR.

SN 77-691,926, FILED 3-16-2009.

RENEE MCCRAY, EXAMINING ATTORNEY

David J. Kappos

Director of the United States Patent and Trademark Office