Trials@uspto.gov
571-272-7822

Paper 44
Date: October 22, 2024

UNITED STATES PATENT AND TRADEMARK OFFICE

BEFORE THE PATENT TRIAL AND APPEAL BOARD

LIFECORE FITNESS, LLC d/b/a ASSAULT FITNESS,
Petitioner,

v.

WOODWAY USA, INC.,
Patent Owner.

IPR2023-00843
Patent 10,561,884 B2

Before MEREDITH C. PETRAVICK, NEIL T. POWELL, and AMEE A. SHAH, *Administrative Patent Judges.*

PETRAVICK, *Administrative Patent Judge*.

JUDGMENT
Final Written Decision
Determining Some Challenged Claims Unpatentable
35 U.S.C. § 318(a)

I. INTRODUCTION

A. Background and Summary

LifeCore Fitness, LLC d/b/a Assault Fitness ("Petitioner") filed a Petition requesting *inter partes* review of claims 30–34, 37–54, 57, and 59 of U.S. Patent No. 10,561,884 B2 (Ex. 1001, "the '884 patent"). Paper 2

("Pet."). Woodway USA, Inc. ("Patent Owner") filed a Preliminary Response. Paper 5. On October 24, 2023, we instituted this *inter partes* review as to all challenged claims and all grounds presented in the Petition. Paper 6 ("Institution Decision" or "Inst. Dec.").

After institution, Patent Owner filed a Response to the Petition. Paper 17[1] ("PO Resp."). Petitioner filed a Reply. Paper 25 ("Pet. Reply"). Patent Owner filed a Sur-reply. Paper 29 ("PO Sur-reply"). An oral hearing was held on July 24, 2024 and the transcript is entered into the record. Paper 43 ("Tr").

We have jurisdiction under 35 U.S.C. § 6. This is a Final Written Decision under 35 U.S.C. § 318(a) as to the patentability of the challenged claims of the '884 patent. For the reasons discussed below, we determine that Petitioner has established by a preponderance of the evidence that claims 30–34, 37–39, 41, 45–49, 57, and 59 are unpatentable and has failed to establish by a preponderance of the evidence that claims 40, 42–45, and 50–54 are unpatentable.

B. Real Parties in Interest

Petitioner identifies LifeCore Fitness, LLC d/b/a Assault Fitness as the real party in interest. Paper 22, 1.

Patent Owner identifies Woodway USA, Inc. as the real party in interest. Paper 4, 1.

[1] The record contains sealed and redacted versions for several papers. We refer to the redacted papers in this decision.

C. Related Matters

The parties identify the following related court proceedings:

> *Woodway USA, Inc., v. LifeCore Fitness, Inc. d/b/a Assault Fitness,* Case No. 3:22-cv-00492 (S.D. Cal.) ("the District Court Litigation"),
>
> *Woodway USA, Inc. v. Samsara Fitness, LLC et al.*, Case No. 2:15-cv-00956 (DWI), and
>
> *Chapco, Inc. et al v. Woodway USA, Inc.*, Case No. 3:15-cv-01665 (DCT).

Pet. vi; Paper 4, 1.

This proceeding is related to the following *inter partes* reviews: IPR2023-00836 (U.S. Patent No. 9,039,580 B1), IPR2023-00849 (U.S. Patent No. 10,799,745 B2), and IPR2024-00083 (U.S. Patent No. 11,465,005).

D. The '884 Patent

The '884 patent is titled "Manual Treadmill and Methods of Operating the Same" and issued on February, 18, 2020. Ex. 1001, code (45), (54).

The ’884 patent depicts manual treadmill 10 in Figure 1, which is reproduced below.

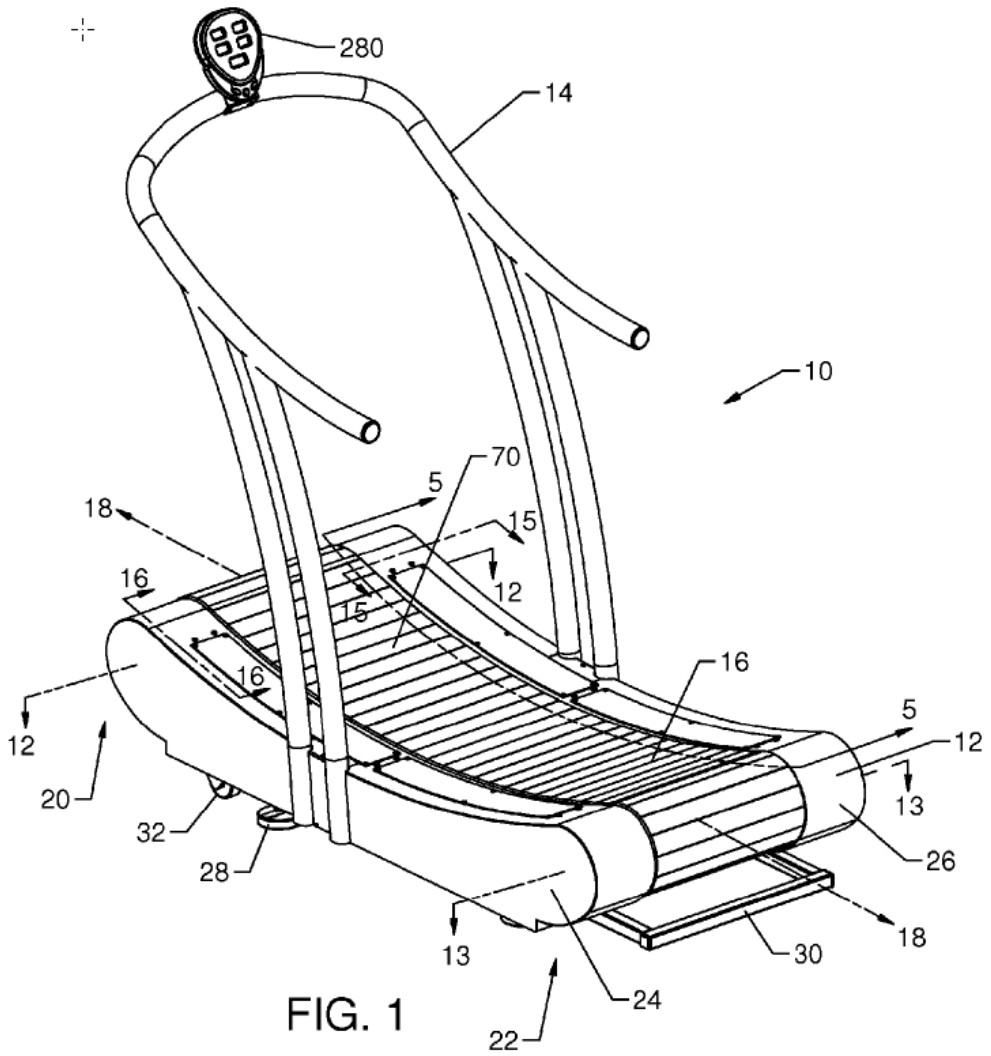

FIG. 1

Figure 1 shows manual treadmill 10, having a handrail 14 mounted on a base 12, which supports running belt 16. *Id.* at 4:50–54. Running belt 16 has a non-planar, curved running surface 70. *Id.* at 6:64–66. As the user runs, running belt 16 generally moves rearward or clockwise. *Id.* at 6:66–7:1, 29:5–6.

Figure 2 of the ’884 patent is reproduced below.

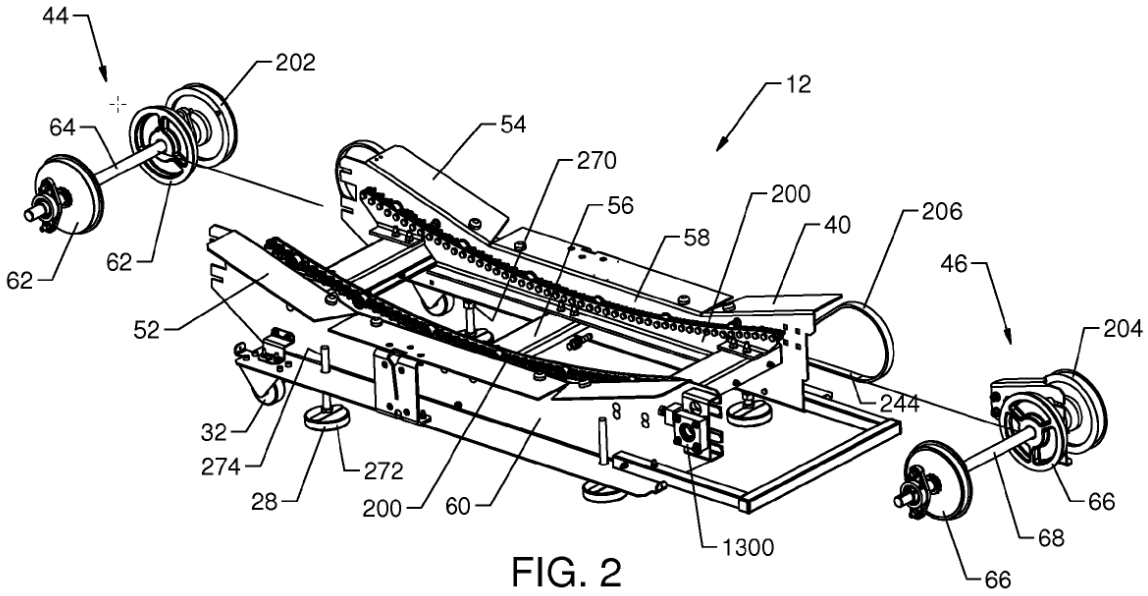

FIG. 2

Figure 2 depicts an embodiment of base 12, having a frame 40, front shaft assembly 44 and rear shaft assembly 46. *Id.* at 3:40–42, 5:12–17. Rear shaft assembly 46 has running belt pulleys 66 fixed to rear shaft 68. *Id.* at 5:37–39. Attached to frame 40 are bearing rails 200.

Figure 9 of the ’884 patent is reproduced below.

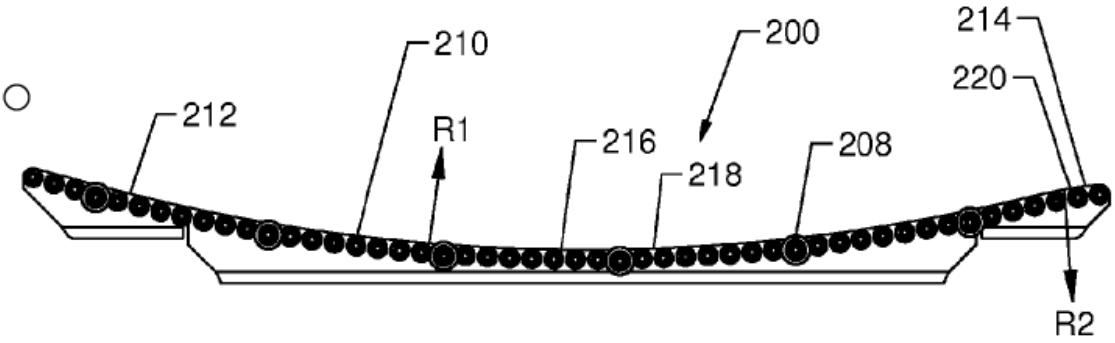

FIG. 9

Figure 9 depicts bearing rail 200. *Id.* at 3:26–27. Bearing rail 200 includes a plurality of bearings 208 and has top profile 210, which is shaped as a complex curve in this embodiment. *Id.* at 11:20–23. However, the shape of

the top profile can have variations and may not have an entirely smooth contour. *Id.* at 12:12–18, Figs. 7*a*–7*j*.

Forward rotation of running belt 16 is undesirable because it could cause a user to lose their footing, resulting in injury. *Id.* at 27:4–10. Manual treadmill 10, thus, may include safety devices to prevent forward rotation. *Id.* at 27:11–13. One safety device is depicted in Figure 36 of the '884 patent, reproduced below.

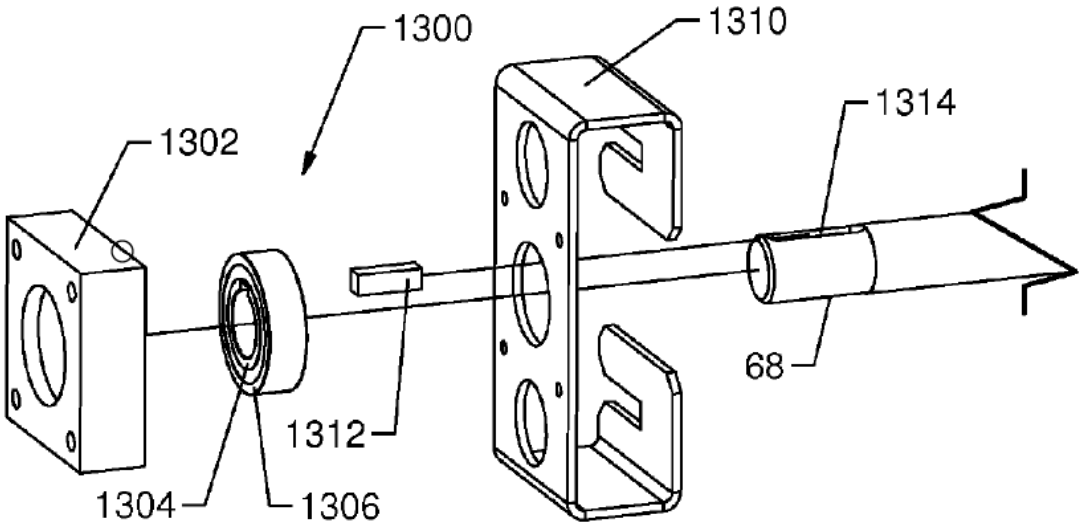

FIG. 36

Figure 36 depicts one embodiment of a one-way bearing assembly. *Id.* at 4:37–39. One-way bearing assembly 1300 restricts motion by permitting rotation of front and rear shaft assemblies 44, 46 in only one direction. *Id.* at 27:15–21. One-way bearing assembly 1300 has inner ring 1304 and an outer ring 1306. *Id.* at 27:22–26. Disposed between inner ring 1304 and outer ring 1306 are sprags (not shown) that are asymmetric and, thus, allow for motion in one direction and prevent rotation in the opposite direction. *Id.* at 27:26–29. Outer ring 1306 is fixed to housing 1302, which is mounted to frame 40 so as to prevent movement of housing 1302 in response to rotation

of rear shaft 68. *Id.* at 27:22–29. Key 1312 is fixed to inner ring 1304 and cooperates with keyway 1314 in rear shaft 68, and, thus, inner ring 1341 rotates with rear shaft 68. *Id.* at 27:43–46, 27:49–53.

> If a force is applied by the user to the running belt 16 that urges the rear shaft 68 to rotate counterclockwise, the one way bearing assembly 1300 provides a counter force, preventing the counterclockwise rotation of the rear shaft 68 and the forward rotation of the running belt 16. Specifically, as the rear shaft 68 begins to move counterclockwise, the interaction of the key 1312 and the keyway 1314 begins to drive the inner ring 1304 of the one-way bearing assembly 1300 rearward. The sprags become wedged between the inner ring 1304 and the outer ring 1306, preventing the counterclockwise rotation of the inner ring and key 1312 disposed therein. The key 1312, by virtue of its inability to rotate, provides a counterforce to the keyway 1314 as the key way continues to attempt to rotate counterclockwise. By preventing the key way 1314 from moving counterclockwise, the one-way bearing assembly 1300 thus prevents the rear shaft 68, the rear running belt pulleys 66, and running belt 16 from rotating counterclockwise as seen in FIGS. 1 and 5.

Id. at 27:53–28:4.

The ’884 patent discloses another embodiment of a safety device having a one-way bearing assembly. *Id.* at 28:5–7, Fig. 38. Additionally, the ’884 patent discloses other safety systems to prevent undesirable forward rotation of running belt 16, such as a cam locking system, taper locks, a user operated pin system, or a band brake system with a lever. *Id.* at 29:30–35.

E. Illustrative Claim

Petitioner challenges claims 30–34, 37–54, 57, and 59 of the ’884 patent. Claims 30, 37, 50 and 57 are independent. Claims 31–34 depend directly or indirectly from claim 30, and claims 38–49 depend directly or

indirectly from claim 37, claims 52–54 depend from claim 50, and claim 59 depends from claim 57. Claim 30 is illustrative and reproduced below.

> 30. A manually powered treadmill, comprising:
> a frame having a front end and a rear end positioned opposite the front end;
> a front shaft coupled to the frame proximate the front end;
> a rear shaft coupled to the frame proximate the rear end;
> a plurality of bearings coupled to the frame;
> a running belt at least partially supported by the plurality of bearings, wherein the running belt comprises a curved running surface; and
> a safety device coupled to the frame and the running belt, the safety device having a first rotatable element and a second rotatable element, wherein at least one of the first and second rotatable elements are adapted for rotation relative to the frame;
> wherein the running belt and one of the first and second rotatable elements of the safety device freely rotate in a first direction of rotation relative to the other of the first and second rotatable elements of the safety device, but interference between the safety device and at least one of the first and second rotatable elements substantially prevents rotation in a second direction of rotation, opposite the first direction of rotation, of the running belt and the one of the first and second rotatable elements relative to the other of the one of the first and second rotatable elements.

Ex. 1001, 35:51–36:8.

F. Evidence and Asserted Grounds

Petitioner asserts that claims 30–34, 37–54, 57, and 59 would have been unpatentable on the following grounds:

Claim(s) Challenged	35 U.S.C. §	Reference(s)/Basis
30–34, 37–43, 45–50, 52–54, 57, 59	103	Schönenberger [2], Socwell[3], Magid[4], Sclater[5]
44, 51	103	Schönenberger, Socwell, Magid, Sclater, Skowronski[6]
30–34, 37–54, 57, 59	103	Schönenberger, Socwell, Magid, Sclater
30–34, 37–39, 41, 45–49, 57, 59	103	Chickering[7], Magid, Sclater

Pet. 4–5.

Petitioner also relies upon the Declarations of Robert Giachetti, Ph.D. (Exs. 1003, 1036).

To support its patentability arguments, Patent Owner relies upon the Declaration of Kim B. Blair, Ph.D. Ex. 2018. To support its secondary consideration arguments, Patent Owner relies upon Eric A. Weber. Ex. 2020.

[2] U.S. Patent No. 4,614,337, issued Sept. 30, 1986 (Ex. 1010).
[3] U.S. Patent No. 5,897,461, issued Apr. 27, 1999 (Ex. 1011).
[4] U.S. Patent No. 5,538,489, issued July 23, 1996 (Ex. 1012).
[5] Neil Sclater and Nicholas P. Chironis, Mechanisms & Mechanical Devices Sourcebook, Third Ed., (McGraw-Hill 2001) (Ex. 1017).
[6] U.S. Patent No. 6,923,746, issued Aug. 2, 2005 (Ex. 1030).
[7] U.S. Patent No. 3,637,206, issued Jan. 25, 1972 (Ex. 1013).

II. ANALYSIS

A. Legal Standards

"In an IPR, the petitioner has the burden from the onset to show with particularity why the patent it challenges is unpatentable." *Harmonic Inc. v. Avid Tech., Inc.*, 815 F.3d 1356, 1363 (Fed. Cir. 2016) (citing 35 U.S.C. § 312(a)(3) (requiring *inter partes* review petitions to identify "with particularity . . . the evidence that supports the grounds for the challenge to each claim")); *Dynamic Drinkware, LLC v. Nat'l Graphics, Inc.*, 800 F.3d 1375, 1378 (Fed. Cir. 2015) (discussing the burden of proof in *inter partes* review).

A claim is unpatentable under § 103(a) if the differences between the claimed subject matter and the prior art are such that the subject matter, as a whole, would have been obvious at the time the invention was made to a person having ordinary skill in the art to which said subject matter pertains. *KSR Int'l Co. v. Teleflex Inc.*, 550 U.S. 398, 406 (2007). "[W]hen a patent claims a structure already known in the prior art that is altered by the mere substitution of one element for another known in the field, the combination must do more than yield a predictable result." *KSR*, 550 U.S. at 416 (citing *U.S. v. Adams*, 383 U.S. 39, 50–51 (1966)). The question of obviousness is resolved on the basis of underlying factual determinations, including (1) the scope and content of the prior art; (2) any differences between the claimed subject matter and the prior art; (3) the level of skill in the art; and (4) when in evidence, objective indicia of non-obviousness (i.e., secondary considerations). *Graham v. John Deere Co.*, 383 U.S. 1, 17–18 (1966).

B. Level of Ordinary Skill in the Art

In determining the level of ordinary skill in the art, various non-exhaustive factors may be considered, including: "(1) the educational level of the inventor; (2) type of problems encountered in the art; (3) prior art solutions to those problems; (4) rapidity with which innovations are made; (5) sophistication of the technology; and (6) educational level of active workers in the field." *Daiichi Sankyo Co. v. Apotex, Inc.*, 501 F.3d 1254, 1256 (Fed. Cir. 2007) (quoting *Envtl. Designs, Ltd. v. Union Oil Co.*, 713 F.2d 693, 696 (Fed. Cir. 1983)).

Petitioner contends that a person of ordinary skill in the art ("POSA") "would have had a bachelor's degree in mechanical engineering and at least one year of machine design experience related to power transmission equipment and a demonstrated understanding of exercise biomechanics, including anthropometry (i.e., the study of human proportion)." Pet. 5 (citing Ex. 1003 ¶¶ 48, 44–49 (supporting testimony of Dr. Giachetti)) Pet. Reply 3. Petitioner additionally states that "[t]his description is approximate and additional development experience could make up for less education and vice versa." Pet. 5. Petitioner argues that experience with exercise biomechanics is important for the design of curved treadmills. Pet. Reply 3 (citing Ex. 1036 ¶¶ 22–23).

Patent Owner argues that a POSA "would be a person with a bachelor of science degree in mechanical engineering *or* at least two years of experience in the treadmill industry, including experience and knowledge of the design, construction, testing, and operation of manual treadmills." PO Resp. 3–4 (emphasis added) (citing Ex. 2018 ¶¶ 70–75 (supporting testimony of Dr. Blair)). Patent Owner argues that its proposed level does not exclude the inventors of the '884 patent, who do not have a mechanical

engineering degree, and is more consistent with the claim language. *Id.*; PO Sur-reply 2–3. Patent Owner, however, states that the patentability analysis would not change whether we adopt Petitioner's or Patent Owner's definition. PO Resp. 4.

We do not adopt Patent Owner's definition of the level of ordinary skill in the art because it is overly broad. During oral argument, Patent Owner clarified that its proposed level of ordinary skill includes a person with a mechanical engineering degree and no experience in the treadmill industry. *See, e.g.*, Tr. 73:1–6. A POSA should have some knowledge related to treadmills as the '884 patent and the prior art all relate to the field of treadmills. *See generally* Exs. 1001, 1009–1013; *See Okajima v. Bourdeau*, 261 F.3d 1350, 1355 (Fed. Cir. 2001).

Both Petitioner and Patent Owner's definitions encompass a person who has at least a degree in mechanical engineering degree. Pet. 5; PO Resp. 3–4. Petitioner's definition additionally requires knowledge of exercise biomechanics, including anthropometry, and Patent Owner's additionally requires knowledge of design, construction, testing, and operation of manual treadmills. Patent Owner argues that "any definition that requires a POSA to be a degreed engineer with 'a demonstrated understanding of exercise biomechanics, including anthropometry'. . . — would necessarily exclude certain named inventions." PO Sur-reply 2–3. We agree with Patent Owner that that experience and knowledge of treadmills is require, but the knowledge of exercise biomechanics is not. Ex. 2018 ¶ 70.

Accordingly, we determine that a POSA would have a Bachelor's of Science degree in mechanical engineering and at least one year of

experience in the treadmill industry, including experience and knowledge of the design, construction, testing, and operation of manual treadmills overall.

However, we note that our analysis and conclusions as to patentability would not change if we had adopted either Petitioner's or Patent Owner's definitions. We note that the parties do not indicate that the outcome of our patentability analysis would differ based on the definition of a POSA. *See* Pet. 5; PO Resp. 4; Pet. Reply 2–3.

C. Claim Construction

We construe each claim "in accordance with the ordinary and customary meaning of such claim as understood by one of ordinary skill in the art and the prosecution history pertaining to the patent." 37 C.F.R. § 42.100(b). Under this standard, claim terms are generally given their plain and ordinary meaning as would have been understood by a person of ordinary skill in the art at the time of the invention and in the context of the entire patent disclosure. *Phillips v. AWH Corp.*, 415 F.3d 1303, 1313 (Fed. Cir. 2005) (en banc). Only those terms in controversy need to be construed, and only to the extent necessary to resolve the controversy. *Realtime Data LLC v. Iancu*, 912 F.3d 1368, 1375 (Fed. Cir. 2019).

In the Petition, Petitioner states that claim terms should be construed according to their ordinary and customer meaning. Pet. 18. After the Petition was filed the District Court in the related District Court Litigation issued a Markman Order (Ex. 1033) construing the terms "substantially prevent" and "safety device."

1. "substantially prevent"

The District Court construed "substantially prevent" as "restricts rotation to allow for only one rotational direction of movement."

Ex. 1033, 16. In this proceeding, we need not construe this claim term as there is no related dispute.

2. "safety device"

For the '884 patent, the District Court construed "safety device" as "a device that includes the elements recited [in the claims] and restricts rotation to allow for only one rotational direction of movement." Ex. 1033, 23.

Both parties indicate that we should adopt the District Court's construction. PO Resp. 5; Pet. Reply 2. We, thus, construe "safety device" as "a device that includes the elements recited [in the claims] and restricts rotation to allow for only one rotational direction of movement

We need not construe explicitly any other claim terms to reach our decision. *See Realtime Data*, 912 F.3d at 1375 ("The Board is required to construe 'only those terms . . . that are in controversy, and only to the extent necessary to resolve the controversy.'" (quoting *Vivid Techs., Inc. v. Am. Sci. & Eng'g, Inc.*, 200 F.3d 795, 803 (Fed. Cir. 1999))).

D. Ground 1: Schönenberger, Socwell, Magid, Sclater

1. Summary of Schönenberger

Schönenberger is a U.S. patent titled "Movable Surface Apparatus, Particularly for Physical Exercise and Training" and issued on September 30, 1986. Ex. 1010, codes (45), (54). Schönenberger discloses a movable surface apparatus that may be driven by gravity. *Id.* at 4:34–37, 13:33–34. One objective of Schönenberger's invention is to provide an apparatus that "is safe in operation and requires little operating power, has low noise level in operation." *Id.* at 1:65–66. Another objective is to provide an apparatus having

> a pleasant, springy feel when being stepped or jumped on without, however, being excessively stressed by bending or bowing, so that the surface which is engaged by the foot of the user will have, essentially, the characteristics of a yielding, yet firm support similar, for example, to walking on moss-covered ground or a needle-covered path.

Id. at 1:67–2:5.

Figure 2, reproduced below, "is a fragmentary schematic side view of the movable surface and its drive arrangement, with the housing removed." *Id.* at 3:1–3.

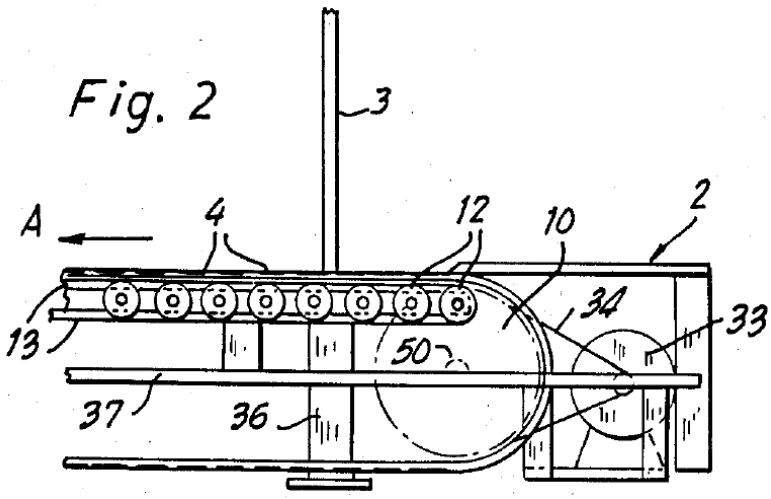

Schönenberger's Figure 2 "is a fragmentary schematic side view of the movable surface and its drive arrangement, with the housing removed." *Id.* at 3:1–3. Housing 2 includes frame members 36 and 37 which provide for physical and structural support. Schönenberger discloses that "within the housing 2 are located rotatable drums, rollers, sheaves, sprockets, or the like, about which the surface 1, which is an endless loop, is placed." *Id.* at 4:15–17. Schönenberger discloses that the rotatable elements are "preferably in the form of two operating drums or rollers 10" and that "rollers or sheaves 10 have a toothed or ribbed circumference." *Id.* at 4:18–20; 4:23–24.

Schönenberger discloses movable surface 1 is formed of slats 4. *Id.* at 2:6–9, 5:38–41. Slats 4 are preferably made of lightweight metal, like aluminum, and have a generally T-shaped cross section with center web 8. *Id*. at 4:43–47. "The distance between adjacent step slats 4 is so selected that only little space or clearance is left between the slats—just enough to prevent interference of adjacent slats upon movement." *Id.* at 4:54–57.

Figure 19 of Schönenberger is reproduced below.

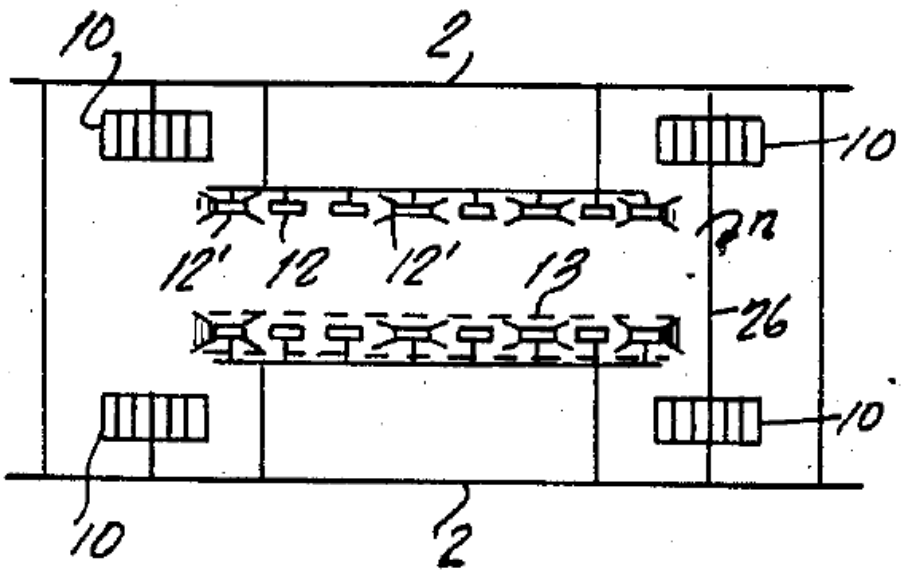

FIG. 19

Figure 19 depicts a schematic top view of the support and drive arrangement for the running surface. *Id.* at 3:51–54. Slats 4 is supported by rubber support belt 13 *Id.* at 5:1–3, 5:9–12. Support belt 13 is positioned over support rollers 12 so that there is a small distance between support belt 13 and slats 4 when unloaded. *Id.* at 5:51–52. Upon loading, the flat underside of slats 4 will engage support belts 13, 13' and the support belts move and engage support rollers 12. *Id.* at 5:57–65.

In one embodiment, Schönenberger replaces support belts 13, 13' with a belt 5' that bears against support rollers 12 when loaded. *Id.* at 8:34–62, Fig. 10.

2. Summary of Socwell

Socwell is a U.S. patent titled "Exercise Treadmill" and issued on April 27, 1999. Ex. 1011, codes (45), (54). Socwell discloses "a novel curved deck treadmill which provides a structurally supported arcuate shaped, movable surface on which a user may exercise." *Id.* at 3:26–29. In one embodiment, the curved deck treadmill does not have a motor. *Id.* at 11:54–60. Socwell's Figure 1 is reproduced below.

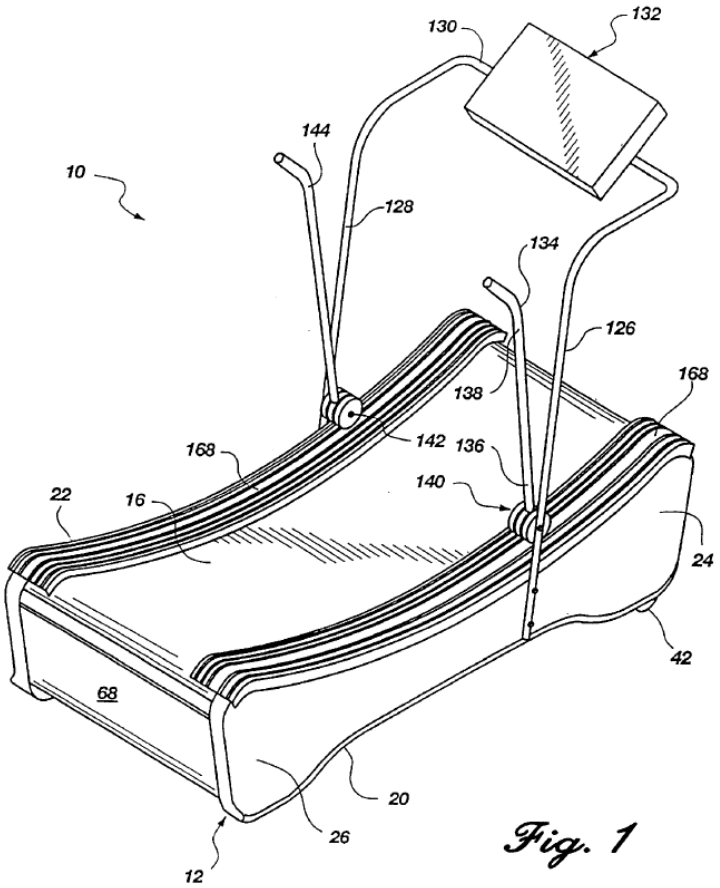

Figure 1 "is a perspective view of one presently preferred embodiment of a curved deck treadmill." *Id.* at 4:35–36. Curved deck treadmill 10

comprises a support frame 12 having first side 20 and second side 22, with deck 56 between. *Id.* at 5:23–26.

Socwell's Figure 2 is reproduced below.

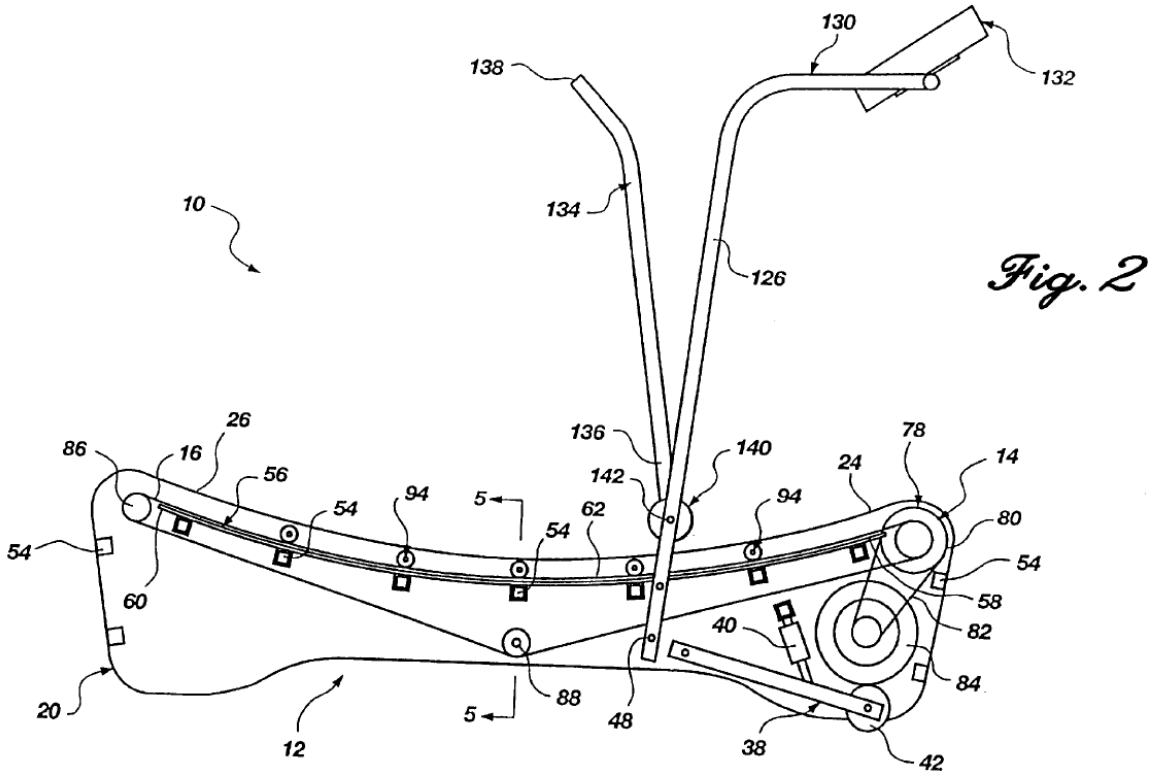

Figure 2 "is a side elevational view of the embodiment of [Figure 1] exposing one presently preferred arrangement of the internal components of the present invention." *Id.* at 4:38–40. In one embodiment, deck 56 has first end 58, second end 60, and intermediate portion 62 between. *Id.* at 5:26–28. Roller assembly 14 is provided between first roller 78 and second roller 86. *Id.* at 5:33–38. Belt 16 is rotatably mounted on roller assembly 14 in relation to deck 56 and provides "a structurally supported arcuate shaped, movable surface on which a user may exercise." *Id.* at 5:42–45.

Socwell's Figure 5 is reproduced below.

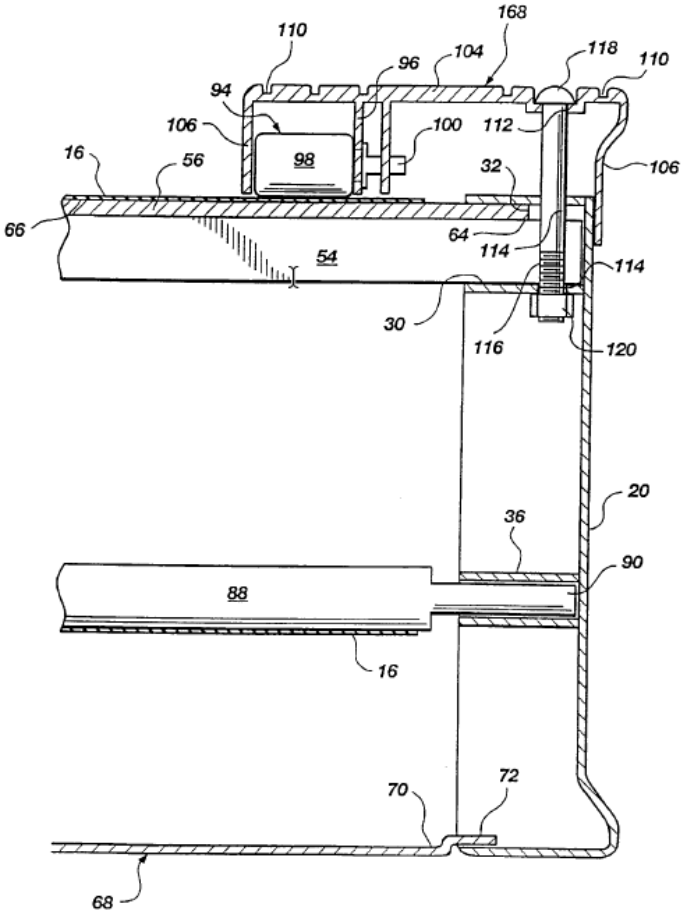

Fig. 5

Figure 5 depicts belt securing assembly 94. Belt securing assembly 94 retains endless belt 15 in a curvilinear configuration, substantially flush with deck 56. *Id.* at 10:5–9. Belt securing assembly 94 includes mounting bracket 96 which holds roller 98 so that roller 98 engages belt 16. *Id.* at 10:17–21.

3. Summary of Magid

Magid is a U.S. patent titled "Walker Apparatus with Left and Right Foot Belts" and issued on July 23, 1996. Ex. 1012, codes (45), (54).

Magid's Figure 2 is reproduced below.

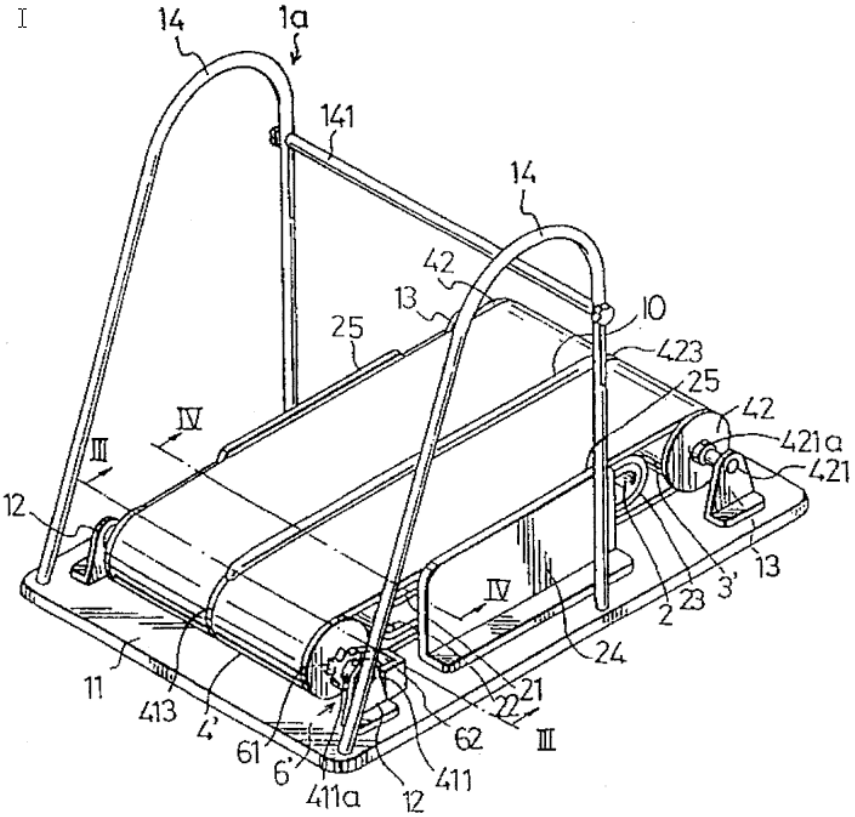

FIG. 2

Figure 2 depicts Magid's preferred embodiment of a walker apparatus — an exercise walker. *Id.* at 3:41–44. The exercise walker comprises base 11, having two-foot belts 4, 4', a pair of front rollers 41, and a pair of real rollers 42. Figure 2 shows unidirectional control means 6, 6', which permits only unidirectional movement of foot belts 4, 4'. *Id.* at 4:47–49. Magid states:

> A unidirectional control means 6, 6' is installed to permit only unidirectional movement of the left and right foot belts 4, 4'. In this embodiment, the control means 6, 6' includes a pair of ratchet gears 61 attached to outer ends of the front rollers 41 and mounted rotatably on the first shaft 411, and a pair of pawls 62 secured to the base 11 and engaging one of the ratchet gears 61

> to permit only unidirectional rotation of the front rollers 41, thereby preventing bidirectional movement of the foot belts 4, 4'. A releasable means (not shown) may be provided to release selectively the pawls 62 from the ratchet gears 61 in a known manner to permit reciprocating movement of the foot belts 4,4' when desired. Of course, the ratchet gears may be attached to the rear rollers 42 to achieve the same result.

Id. at 4:46–60.

4. Summary of Sclater

Sclater is titled "Mechanisms and Mechanical Devices Sourcebook, Third Edition." Ex. 1017, cover. Chapter 9 of Sclater is titled "Coupling, Clutching, and Braking Devices" and describes basic mechanical clutches, including a cam and roller clutch. *Id.* at 302–303. A cam and roller clutch is "[an] over-running clutch [that] is better suited for higher-speed free-wheeling than a pawl-and-ratchet clutch." *Id.* at 303. For a cam and roller clutch,

> [t]he inner driving member has cam surfaces on its outer rim that hold light springs that force the rollers to wedge between the cam surfaces and the inner cylindrical face of the driven member. While driving, friction rather than springs force the rollers to wedge tightly between the members to provide positive clockwise drive. The springs ensure fast clutching action. If the driven member should begin to run ahead of the driver, friction will force the rollers out of their tightly wedged positions and the clutch will slip."

Id.

Sclater also discusses spring-loaded pins and sprags in a one-way clutch and describes them as having "[s]prags combined with cylindrical rollers in a bearing assembly [that] can provide a simple, low-cost method for meeting the torque and bearing requirements of most machine

applications" and can serve as a roller bearing, and with the clutch's torque rating dependent on the number of sprags. *Id.* at 312.

Sclater further provides "details of overriding clutches" and explains a friction clutch is quieter than a ratchet and pawl. *Id.* at 316. In discussing ways to apply overrunning clutches, Sclater explains that "[t]hese clutches allow freewheeling, indexing and backstopping," and "they will solve many design problems." *Id.* at 318.

Figure 1 from Sclater's page 318 is reproduced below.

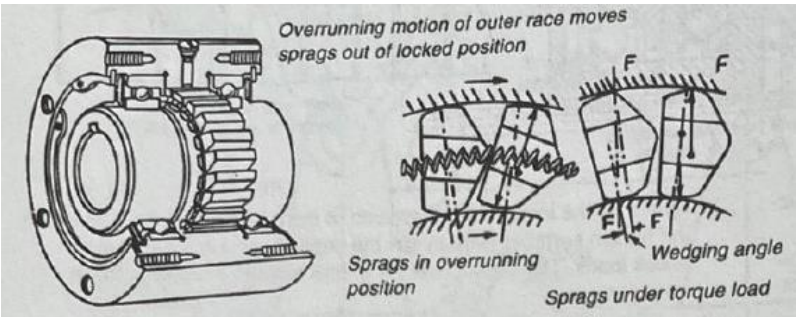

Fig. 1 Precision sprags act as wedges and are made of hardened alloy steel. In the formsprag clutch, torque is transmitted from one race to another by the wedging action of sprags between the races in one direction; in the other direction the clutch freewheels.

Figure 1 illustrates precision sprags which are an example of an overrunning clutch. *Id.* at 318. This clutch transmits torque from one race to another by the wedging actions of sprags between the races in one direction and, in the other direction, the races freewheels. *Id.*

Sclater states that application for sprag-type clutches "include overrunning, backstopping, and indexing" and the selection of an overrunning sprag clutch "requires a review of the torque to be transmitted, overrunning speed, type of lubrication, mounting characteristics, environment conditions, and shock conditions that might be encountered." *Id.* at 320.

Figure 2 from Sclater's page 320 is reproduced below.

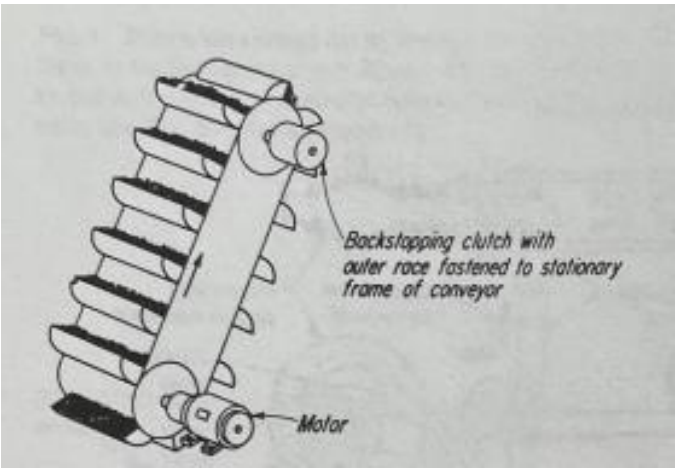

Figure 2 depicts an example application of backstopping. *Id.* at 320. A vertical conveyor carrying buckets and having a motor and a backstopping clutch with an outer race fastened to the stationary frame of the conveyor.

5. Independent Claim 30

Petitioner contends that claim 30 is unpatentable over Schönenberger, Socwell, Magid, and Sclater. Pet. 27–61. In particular, Petitioner argues that a combination of Schönenberger and Socwell teaches a running belt comprising a curved running surface, as recited by claim 30.

Petitioner relies upon Schönenberger as disclosing a movable surface 1 (i.e., a running belt) that is supported by rollers 12, 12,' on brackets 19, and pulleys 10. *Id.* at 34–37 (citing Ex. 1010, 2:6–9, 8:34–51; Ex. 1003 ¶¶ 159–163, 222, 248, 280 285, 293).

Petitioner relies upon Socwell as disclosing "a 'novel curved deck treadmill which provides a structurally supported arcuate shaped, moveable surface on which a user may exercise.'" *Id.* at 37 (citing Ex. 1011, 3:26–29; Ex. 1003 ¶ 165) (emphasis omitted).

Petitioner argues:

> It would have been obvious to POSA to modify Schönenberger's brackets 19 and rollers 12, 12' ("*plurality of bearings*") to provide a curved support surface such that the movable surface 1 ("*running surface"*) "*follows a curved running surface*" as taught by Socwell. (Ex. 1003 ¶¶166-167.)

Id. at38. Petitioner reasons that a POSA would make such a modification to: (1) increase safety (*id.* at 38–40 (citing Ex. 1011, 2:11–29, 2:45–67, 3:1–9, 3:40–45; Ex. 1003 ¶¶ 168, 172; Ex. 1010, 4:1–6)); (2) reduce impact loading of the user's joints (*id.* at 40–41 (citing Ex. 1011, 3:53–57)); (3) provide a more comfortable versatile treadmill that can be used for exercise and rehabilitation (*id.* at 41 (citing Ex. 1011, 3:53–57, 13:43–47; Ex. 1003 ¶ 173)).

Petitioner further asserts that a POSA would have known that lowering Schönenberger's rollers 12 relative to the front and rear shaft assemblies would result in a curved running surface and that the movable surface 1 would follow the profile defined by the rollers 12. *Id.* at 42 (citing Ex. 1003 ¶ 175); Pet. Reply 6 ("it would have been obvious to arrange the rollers 12 curvilinearly like the curved deck 56 of Socwell."). Petitioner

annotated Schönenberger's Figure 12, reproduced below, to illustrate its proposed modification.

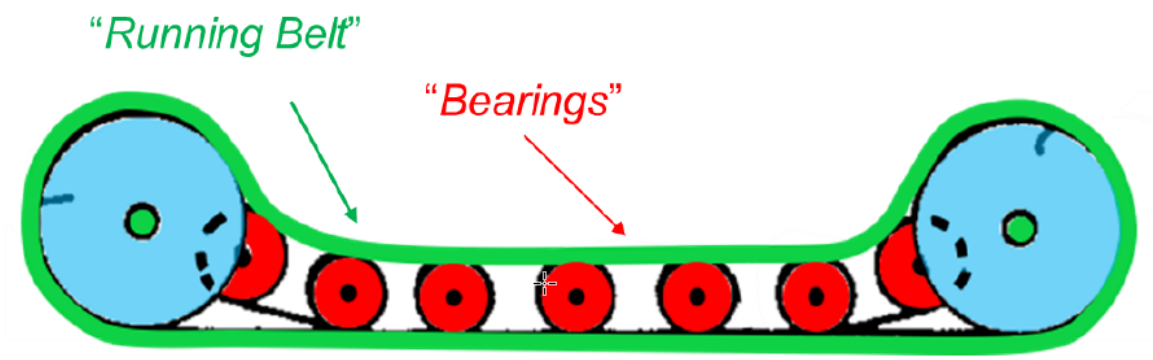

Ex.1010, Fig.12

Schönenberger's Annotated Figure 12 depicts rollers 12 being lower than pulleys 10 and movable surface 1 having a curved running surface. *Id.* at 42.

According to Petitioner, "[t]he modification would be the use of a known technique – using a curvilinear arrangement of bearings, as taught by Socwell – to improve similar devices (treadmills), in the same way, i.e., to produce a curved running surface." *Id.* at 45. Petitioner asserts that because movable surface 1's slats 4 are heavy, they would conform to the profile of the rollers 12. *Id.* at 42–43 (citing Ex. 1003 ¶ 176).

Patent Owner disagrees that in Petitioner's proposed modification moveable surface 1 would follow the curve of rollers 12, 12' because movable surface 1 is formed of rigid metal slats 4. *See generally* PO Resp. 13–21. Patent Owner argues that, because of this difference, it would not have been obvious to a POSA how Socwell's teaching of a curved running surface could be incorporated into Schönenberger's movable surface 1. *Id.*

We determine that Petitioner has not met its burden of showing that a POSA would have modified Schönenberger's brackets 19 and rollers 12, 12'

so that movable surface 1 follows a curved running surface as taught by Socwell. Schönenberger's moveable surface 1 is formed of rigid lightweight metal slats 4. Ex. 1010, 4:43–47. In one embodiment, depicted in Schönenberger's Figure 10, slats 4 are connected to a belt 5', which

> at the same time, forms the resilient cushion between the slats 4 and the support rollers 12, 12' respectively, as well as the longitudinal stiffening element which holds the slat 4 in adjacent alignment in the right position (right angle position with respect to the running direction, at the ends respectively in the area of driving elements 10).

Id. at 8:38–44.

Patent Owner's declarant Dr. Blair testifies that:

> As can be seen, Schonenberger's rollers 12 as shown in Figure 9 again are flat, and the slats 4 follow along that flat plane on the support belt 13. However, if a POSA were to try and create a curved running surface, the POSA would not simply be able to lower the rollers 12 into a curved shape because the width of the slats would necessarily restrict the angles and distances between the rollers. Indeed, Schonenberger teaches that the width of one slat covers two or three of its rollers. EX1010 at 6:19-27 ("…three rollers 12 in engagement with each end of the slat 4 is preferred."). Any added curvature would not be a simple substitution of the curvature taught in Socwell because the slats and support belt mechanisms in Schonenberger need to be accounted for.

Ex. 2018 ¶ 160 (alteration in original). Dr. Blair's testimony indicates that further modification would be needed to Schönenberger's system. *Id.* ¶ 158.

Petitioner responds that in the relied upon embodiment depicted in Figure 10 "the individual slats 4 cannot overlap because the belts 5' maintain positioning of the slats 4 relative to each other." Pet. Reply 9 (citing Ex.1010, 4:37–41, 8:34–44; Ex.1036 ¶ 47 (testimony of Dr. Giachetti).

But, Schönenberger discloses that the distance between adjacent slats "is so selected that only little space or clearance is left between the slats." Ex. 1010, 4:54–56. Neither Petitioner's response nor Dr. Giachetti's cited testimony sufficiently explains how a POSA would modify Schönenberger's movable surface 1, having slats 4, to accommodate a concave curvature. *See* Ex. 1036 ¶ 47; Ex. 2018 ¶¶ 161–164.

We determine that Petitioner has not met its burden of showing that it would have been obvious to a POSA to modify Schönenberger's brackets 19 and rollers 12, 12' so that movable surface 1 follows a curved running surface as taught by Socwell.

a) Conclusion as to claim 30

After considering Petitioner's evidence and analysis, and taking into account Patent Owner's arguments, based on the record before us this stage of the proceeding, we determine that Petitioner has failed to show that claim 30 is unpatentable over Schönenberger, Socwell, Magid, and Sclater.

6. Independent claims 37, 50, and 57

Petitioner relies upon a similar analysis to show that independent claims 37, 50, and 57 are unpatentable as the analysis it relies upon to show claim 30 is unpatentable. *See* Pet. 27–61.

Patent Owner relies upon the same arguments it made in connection with claim 30. *See generally* PO Resp. (arguing claims 30, 37, 50, and 57 together).

For similar reasons as discussed above with respect to claim 30, after considering Petitioner's evidence and analysis, we determine that Petitioner has failed to show by a preponderance of the evidence that claims 37, 50, and 57 are unpatentable over Schönenberger, Socwell, Magid, and Sclater.

7. Dependent Claims 31–34, 38, 39, 41, 45–49, and 59

Petitioner contends that the additional limitations of dependent claims 31–34, 38, 39, 41, 45–49, and 59 are unpatentable over Schönenberger, Socwell, Magid, and Sclater. Pet. 61–70. Claims 31–34, 38, 39, 41, 45–49, and 59 depend from claims 30, 37, 50, and 57.

We determine that Petitioner has failed to show by a preponderance of the evidence that claims 31–34, 38, 39, 41, 45–49, and 59 are unpatentable over Schönenberger, Socwell, Magid, and Sclater. *In re Fritch*, 972 F.2d 1260, 1266 (Fed. Cir. 1992) ("[D]ependent claims are nonobvious if the independent claims from which they depend are nonobvious.").

E. Ground 2: Unpatentability over Schönenberger, Socwell, Magid, Sclater, and Skowronski

Petitioner contends that claims 44 and 51 are unpatentable over Schönenberger, Socwell, Magid, Sclater, and Skowronski. Pet. 70–75. Claim 44 depends from claim 37, and claim 51 depends from claim 50. We determine that Petitioner has failed show by a preponderance of the evidence that claims 41 and 55 are unpatentable over Schönenberger, Socwell, Magid, Sclater, and Showronski. *In re Fritch*, 972 F.2d at 1266.

F. Ground 3: Unpatentability over Schönenberger, Socwell, Magid, Sclater

Petitioner contends that claims 30–34, 37–54, 57, and 59 are unpatentable over Schönenberger, Socwell, Magid and Sclater. Pet. 75–79. This is the same combination of references presented for ground 1. For ground 3 only, Petitioner proposes alternate claim constructions from the District Court Litigation for the terms "shaft," "safety device" and

"substantially prevent" and applies those constructions. *Id.* at 19, 75; Pet. Reply 2.

For similar reasons as discussed above with respect to ground 1, we determine that Petitioner has failed to show by a preponderance of the evidence that claims 37, 50, and 57 are unpatentable over Schönenberger, Socwell, Magid, and Sclater.

G. Ground 4: Unpatentability over Chickering, Magid, and Sclater

Petitioner contends that claims 30–34, 37–39, 41, 45–49, 57, and 59 are unpatentable over Chickering, Magid, and Sclater. Pet. 79–103.

1. Summary of Chickering

Chickering is a U.S. Patent titled "Endless Belt Exerciser with Accelerating and Decelerating Tread Surfaces" and issued on January 25, 1972. Ex. 1013, codes (45), (54).

Chickering's Figure 1 is reproduced below.

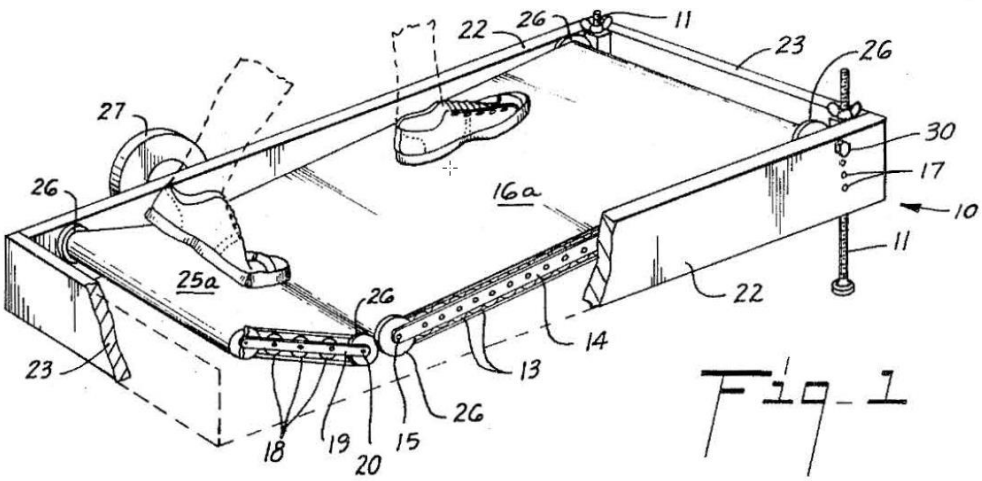

Figure 1 shows one embodiment of an exercise device having base 10 formed of two sidewalls 22 and two end walls 23. *Id.* at 1:65–68. "A first series of transverse parallel rollers 13 have their ends journaled in arms 14,"

and "[a] second series of transverse parallel rollers 18 have their ends journaled in arms 19." *Id.* at 2:14–15, 2:18–19. Endless belt 16 is disposed about rollers 13 and endless belt 25 is disposed about rollers 18. *Id.* at 2:15–17, 2:19–21. Arms 14 and 19 are pivotally connected to sidewalls 22, so that the inclination of first and second series of rollers 13 and 18 can be adjusted. *Id.* at 2:2–13, 2:27–31.

Chickering's Figure 3 is reproduced below.

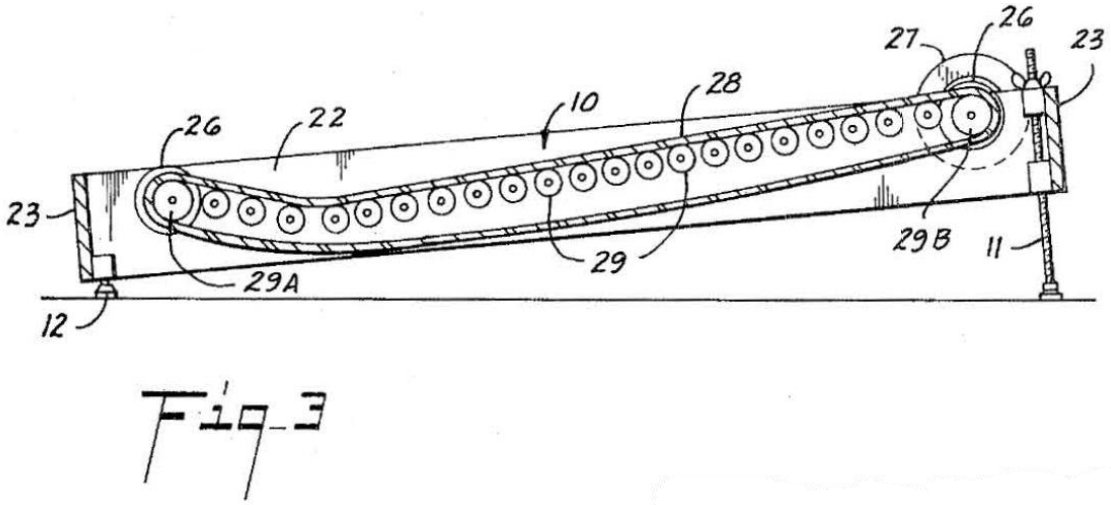

Figure 3 depicts an alternate embodiment having single endless belt 28. *Id.* at 2:73–75. In this embodiment, rollers 29 are journaled in sidewalls 22 of base 10. *Id.* at 3:1–2.

> [T]he rollers are so disposed that the forward rollers lie approximately in a plane slanting downwardly from the front of the base, while the rear rollers lie approximately in a plane slanting upward toward the rear of the base 10. Thus, when the endless belt 28 is placed about the rollers, it follows their contour.

Id. at 3:2–8. "When a single belt is used, it may be necessary to use heavier belting material so that the belt will lie flat upon the rollers without being under tension." *Id.* at 3:11–13.

1. Independent Claim 30

Petitioner contends that claim 30 is unpatentable over Chickering, Magid, and Sclater. Pet. 79–97.

a) A manually powered treadmill, comprising: [8]

Petitioner contends, and Patent Owner does not dispute, that Chickering discloses a manually powered treadmill. Pet. 79 (citing Ex. 1013, 1:1–7, 2:44–49; Ex. 1003 ¶¶ 354–357, 402, 424); *see generally* PO Resp.

After considering Petitioner's evidence and analysis, we determine that Petitioner has shown by a preponderance of the evidence that Chickering discloses a manually powered treadmill.

b) a frame having a front end and a rear end positioned opposite the front end; a front shaft coupled to the frame proximate the front end; a rear shaft coupled to the frame proximate the rear end;

Petitioner contends, and Patent Owner does not dispute, that Chickering's single-belt embodiment discloses a frame having a front end and rear end, a front shaft coupled to the frame at the front end, a rear shaft coupled to the frame at the rear end. Pet. 80–81 (citing Ex. 1013, 1:65–68, 2:75–3:2, 3:11–16; Ex. 1003 ¶¶ 358–360, 361, 363, 365, 403, 405, 425). Petitioner annotated Chickering's Figure 3 to illustrate this mapping and, the annotated figure is reproduced below.

[8] On this record, we do not need to determine whether the preamble is limiting as it is undisputed that Chickering discloses a manually powered treadmill.

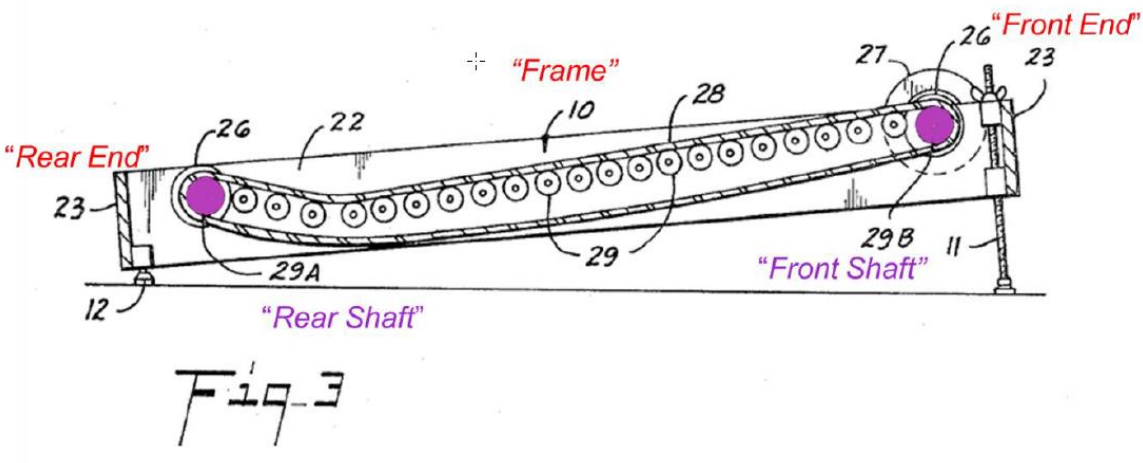

Ex.1013, Fig.3

Chickering Annotated Figure 3 shows base 10 labeled as "Frame" and front and rear end rollers 29B, 29A labeled as "Front Shaft" and "Rear Shaft" respectively. *Id.* at 81.

After considering Petitioner's evidence and analysis, we determine that Petitioner has shown by a preponderance of the evidence that Chickering discloses a frame, a front shaft, and a rear shaft as arranged as recited in claim 30.

c) a plurality of bearings coupled to the frame;

Petitioner contends, and Patent Owner does not dispute, that Chickering discloses journaled rollers 29 (i.e., bearings) coupled to base 10. Pet. 81 (citing Ex. 1013, 2:75–3:23:11–16; Ex. 1003 ¶¶ 360–361, 363, 365, 405).

After considering Petitioner's evidence and analysis, we determine that Petitioner has shown by a preponderance of the evidence that Chickering discloses a plurality of bearings coupled to the frame.

d) a running belt at least partially supported by the plurality of bearings, wherein the running belt comprises a curved running surface

Petitioner maps the claimed running belt to Chickering's endless belt 28 and points to Chickering's depiction of its single-belt embodiment in Figure 3 to show a running belt following a curved running surface. Pet. 83. Dr. Giachetti testifies that Chickering discloses a curved running surface and points to the following paragraph of Chickering for support. Ex. 1003 ¶¶ 368–370, 406–408, 427. Chickering states:

> An alternate form of the exercising device of the present invention is shown in FIG. 3, wherein a single endless belt 28 forms both the accelerating and decelerating areas. In the device shown in FIG. 3, a single series of rollers 29 are provided journaled in the sidewalls 22 of base 10. However, the rollers are so disposed that the forward rollers lie approximately in a plane slanting downwardly from the front of the base, while the rear rollers lie approximately in a plane slanting upward toward the rear of the base 10. Thus, when the endless belt 28 is placed about the rollers, it follows their contour and provides a forward accelerating area and a rear decelerating area which are inclined from the horizontal with each being lowest at their point of nearest proximity.

Ex. 1013, 2:73–3:10.

Petitioner annotates Chickering's Figure 3 to illustrate this contour. Petitioner's Annotated Figure 3 is reproduced below.

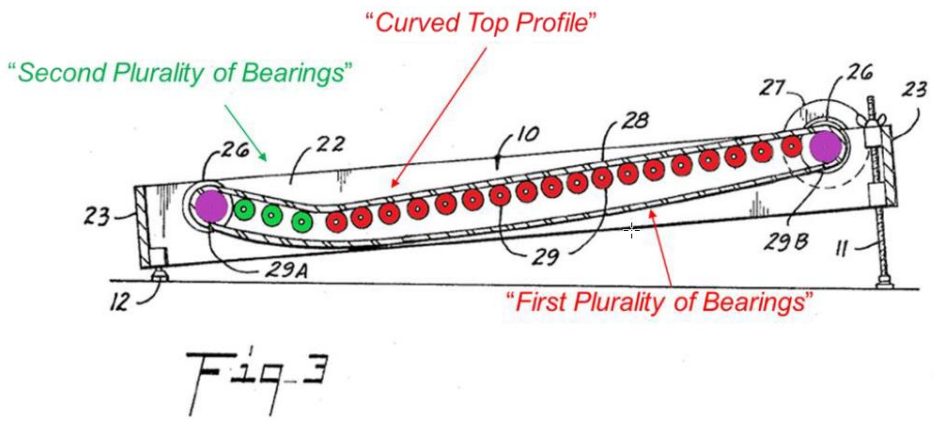

Ex.1013, Fig.3

Petitioner's Annotated Figure 3 show the single-belt embodiment with arrow pointing to the curved top profile. Pet. 83.

Dr. Giachetti testifies that Chickering discloses a curved running surface and points to the following paragraph of Chickering for support. Ex. 1003 ¶ 161.

> An alternate form of the exercising device of the present invention is shown in FIG. 3, wherein a single endless belt 28 forms both the accelerating and decelerating areas. In the device shown in FIG. 3, a single series of rollers 29 are provided journaled in the sidewalls 22 of base 10. However, the rollers are so disposed that the forward rollers lie approximately in a plane slanting downwardly from the front of the base, while the rear rollers lie approximately in a plane slanting upward toward the rear of the base 10. Thus, when the endless belt 28 is placed about the rollers, it follows their contour and provides a forward accelerating area and a rear decelerating area which are inclined from the horizontal with each being lowest at their point of nearest proximity.

Ex. 1013, 2:73–3:10.

Patent Owner disputes that Chickering's single-belt embodiment discloses a running belt following a curved running surface. PO Resp. 7–13. Like Petitioner, Patent Owner points to Chickering's disclosure that the rollers are so disposed that the forward rollers lie approximately in a plane slanting downwardly from the front of the base, while the rear rollers lie approximately in a plane slanting upward toward the rear of the base 10 (Ex. 1013, 3:2–6) and argues that "[b]ecause the single endless belt 28 'follows' the planes of these rollers when it is 'placed about the rollers' ([Ex. 1013,]3:6-8), a POSA would further understand that Chickering's alternative, single-belt embodiment also discloses a multi-planar running surface rather than a curved running surface." PO Resp. 9–10. Patent Owner annotates Chickering's Figure 3 to illustrate this point and Patent Owner's annotated Figure 3 is reproduced below. *Id.*

EX1013, Fig. 3

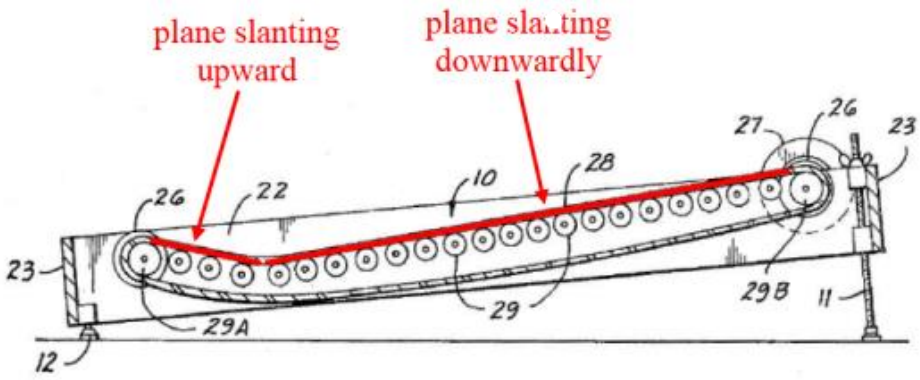

Patent Owner annotated Chickering's Figure 3 to include a line along the top of rear rollers 29 to show a plane slanting upward and a line along the top of

forward rollers 29 to show a plane slanting downwardly along forward rollers 29. *Id.*

Relying upon the testimony of Dr. Blair, Patent Owner argues that the claimed running surface is a surface with which a runner's feet are intended to make contact when using a treadmill and, in Chickering, a runner's feet is not intended to contact the belt at the area where the forward rollers meet the rearward rollers. PO Resp. 10–13 (citing Ex. 2018 ¶¶ 93–94); *see also* PO Sur-reply 6–7. Citing a description of Chickering's two-belt embodiment, Patent Owner argues that there would be a brief instance where a runner's feet would not be contact with endless belt 28 of the one-blet embodiment. PO Resp. 11–12 (citing Ex. 1013, 2:50–58). Patent Owner, thus, argues that Chickering does not disclose a curved running surface. *Id.* at 13.

Petitioner responds that the claims do not require that the claimed running surface is a surface with which a runner's feet are intended to make contact when using a treadmill. Pet. Reply 3–5. Petitioner argues that "Chickering discloses [that] the single belt is heavier thus requiring a more gradual curvature" and "[a] POSA would have understood this disclosure in Chickering to teach that a user would contact the curved area of the running surface." *Id.* at 4–5 (citing Ex. 1036 ¶¶ 27–31).

We agree with Petitioner that Chickering's single-belt embodiment discloses a curved running surface, as recited by claim 30. Chickering describes endless belt 28 as following the contour of the rollers with areas that are inclined from the horizontal and meet at their lowest point. Ex. 1013, 2:73–3:10. As can be seen from Petitioner's annotated Figure 3 of Chickering above, the rollers meet at their lowest portion (i.e., the central portion) and endless belt 28 is depicted as curved at that point. *See id.* at Fig. 3. This is consistent with Chickering's disclosure that the single-belt

embodiment needs heavier belting and consistent with Dr. Giachetti's testimony that a POSA would know that heavier belting requires a larger turn radius. Ex. 1036 ¶¶ 27–31. On cross-examination, Dr. Blair testifies that "the running belt would be bending in a very, very small curve at that point to follow those trajectories, the two planes." Ex. 1038, 24:23–25.

We find Patent Owner's arguments and the testimony of Dr. Blair to be unpersuasive, because we do not agree that the claimed running surface is required to be a surface with which a runner's feet are intended to make contact when using a treadmill.

Dr. Blair testifies that "[a] POSA would understand a treadmill's 'running surface' to be a surface that a runner's feet would typically make contact when the user is running on the treadmill during normal use" and that, because a runner's feet is not intended to contact the belt at the area where the forward rollers meet the rearward rollers, that area is not part of the running surface. Ex. 2018 ¶¶ 90–92. Dr. Blair's testimony, however, contains no sufficient explanation to support his conclusion of what a POSA would understand by the term "running surface." *See id.* ¶ 90.

Further, Dr. Blair's testimony is inconsistent with the language of claim 30. Claim 30 recites: "the running belt comprises a curved running surface." Ex. 1001, 35:58–59. The language of claim 30 does not require the running belt's running surface to only be portions that the runner typically or is intended to run upon.

Dr. Blair's testimony is also inconsistent with the '884 patent which does not describe the running surface as being limited to the surface that a runner's feet would typically make contact when the user is running on the treadmill during normal use. *See generally id.* The '884 patent describes numerous examples of continuous running surfaces with a wide variety of

contours. *See id.* at Figs. 7a–7j (depicting side schematic views of the profiles of running surfaces *(id.* at 3:16–22)). The ’884 patent describes running surface as having portions adjacent to the front and rear shafts assemblies 44 and 46 and a central portion there between. *Id.* at 6:34–40. The ’884 patent describes the running surface as generally divided into three general regions—“the front portion 72, which is adjacent to the front shaft assembly 44, the rear portion 74, which is adjacent to the rear shaft assembly 46, and the central portion76, which is intermediate the front portion 72 and the rear portion 74”— which can have different geometric configurations. *Id.*; *see also id.* at 10:15–16 (describing alternative embodiment have more or less than three regions). The ’884 patent discloses a number of geometric configures of the running surface’s portions, including a concave curve integrated with linear portions. *Id.* at 10:11–13; *see also id.* at 9:4–6 (describing the possible geometric configurations as concave, convex, linear and various combination thereof); 10:39–62 (describing that the relative length of the front, central, and rear portions may vary).

Given the language of claim 30 and the disclosure of the ’884 patent, we are not persuaded by the insufficiently supported testimony of Dr. Blair, the claim term “running surface” requires a surface with which a runner’s feet are intended to make contact when using a treadmill.

Petitioner has sufficiently shown that Chickering discloses a running belt supported by the first bearing rail and the second bearing rail and disposed about the front shaft and the rear shaft, wherein the running belt follows a curved running surface.

> *e) a safety device coupled to the frame and the running belt, the safety device having a first rotatable element and a second rotatable element, wherein at least one of the first and second rotatable elements are adapted for rotation relative to the frame; wherein the running belt and one of the first and second rotatable elements of the safety device freely rotate in a first direction of rotation relative to the other of the first and second rotatable elements of the safety device, but interference between the safety device and at least one of the first and second rotatable elements substantially prevents rotation in a second direction of rotation, opposite the first direction of rotation, of the running belt and the one of the first and second rotatable elements relative to the other of the one of the first and second rotatable elements*

Petitioner relies upon Magid's unidirectional control means 6, 6' to teach the claim safety device. Pet. 84–85 (citing Ex. 1012, 4:46–59). In one embodiment, unidirectional control means 6, 6' is a ratchet and pawl mechanism attached to either the front or rear rollers. Ex. 1012, 4:46–59, Figs. 2, 5.

Petitioner contends that "[i]t would have been obvious to a POSA to combine the manual curved treadmill disclosed in Chickering with the known technique of a one-way clutch to prevent belt motion in a forward direction as disclosed in Magid." *Id.* at 85 (citing Ex. 1003 ¶¶ 432–442). Petitioner argues that a POSA would have made such a combination to prevent a user from falling off the treadmill while mounting or dismounting. *Id.* at 86–88. According to Petitioner,

> A POSA would have been motivated to modify Chickering to include Magid's control means 6, 6' mounted to the front roller or the rear roller . . . , to permit only unidirectional belt movement to reduce the risk of a user stepping onto the belt and losing their balance when the belt moves forward.

Id. at 88 (citing Ex. 1003 ¶¶ 439–440 (supporting testimony of Dr. Giachetti)).

We determine that Petitioner's analysis and evidence sufficiently shows that a POSA would have modified Chickering to include a safety device as taught by Magid in order to reduce the risk of a user falling.

A ratchet and pawl clutch, however, does not have a third element to create interference with the ratchet or pawl, as required by claim 30. *See* Pet. 90. Petitioner asserts that a one-way clutch that works by creating interference is taught by Sclater's sprag-type one-way bearing assembly that includes sprags with rolling elements, such as cylindrical rollers or balls, an inner race, and an outer race surrounding the inner race. *Id.* at 90–93 (citing Ex. 1017, 312, 318; Ex. 1003 ¶¶ 378–383). Petitioner further asserts that wedging between the sprags and the inner and outer races prevents rotation of the inner race in an opposite direction and would prevent the movable surface 1 from moving forward. *Id.* at 92 (citing Ex. 1017, 318; Ex. 1003 ¶ 384).

Petitioner argues that Magid's "[r]atchet and pawl clutch" makes noise during operation and Sclater's "friction-type clutch" is quieter. *Id.* at 93; Ex. 1003 ¶ 444. Petitioner contends a "POSA would have considered a sprag-type one-way clutch bearing for an exercise equipment application, such as a treadmill" and "would have known how to replace Magid's control means with Sclater's one-way bearing assembly." Pet. 94–95 (citing Ex. 1018, 52–53; Ex. 1003 ¶ 447).

Petitioner's evidence sufficiently shows that it would have been obvious to a POSA to substitute Sclater's one-way sprag-type bearing for Magid's ratchet and pawl one-way mechanism to obtain predictable results, *e.g.*, reduced noise and improved durability.

Patent Owner first argues that a POSA would not combine Chickering and Magid because Magid teaches away from the combination. PO Resp. 38–44. According to Patent Owner, if Chickering were combined with Magid to modify Magid to have a single belt, Magid's feature of '"preventing the action of the user's left foot from influencing the action of his right foot and vice-versa' would be lost." *Id.* at 39 (quoting Ex. 1012, 5:19–27). Patent Owner also argues that a POSA would not combine Chickering and Magid because Chickering's primary objective is for a user to exercise without relying upon handles, railing, belts to maintain balance. *Id.* at 43 (citing Ex. 1013, 1:40–47).

"A reference may be said to teach away when a person of ordinary skill, upon reading the reference, would be discouraged from following the path set out in the reference, or would be led in a direction divergent from the path that was taken by the applicant." *In re Gurley*, 27 F.3d 551, 553 (Fed. Cir. 1994).

We are not persuaded by Patent Owner that either of Chickering or Magid teaches away from the combination proposed in the Petition — modifying Chickering's single-belt embodiment to include Magid's unidirectional control mean 6, 6' (PO Resp. 41). Patent Owner points to differences between Chickering and Magid, but we are not persuaded that those differences – number of belts, use as a therapeutic device as opposed to a recreational exercise device, use of handles – would discourage a POSA from making the proposed combination. Ex. 1036 ¶¶ 57–59.

Much of Patent Owner's arguments are misplaced because the arguments concern modifying Magid to have a single non-planer belt (*see, e.g.*, PO Resp. 39 (arguing that if Magid was modified to use a single-belt,

Magid's key feature would be lost)) and do not concern the modification proposed in the Petition. Those arguments, thus, are unpersuasive.

Patent Owner next argues that because Magid is focused on a two-belt therapeutic walker device, a POSA would not have looked to Magid and combined its teachings with a single-belt treadmill for a user of ordinary abilities. *Id.* at 39–40. Patent Owner argues that "a POSA would immediately recognize that the Socwell and Chickering devices would have no need for the purported safety device disclosed in Magid" or that a POSA would only look to teaching of other treadmills having curved or multi-planar running surfaces and not to treadmills having flat or uniplanar surfaces. *Id.* at 39. Patent Owner asserts:

> Rather, when looking to improve or modify a curved or multi-planar treadmill like that described in . . . Chickering, . . ., a POSA would examine the teachings of other treadmills having curved or multi-planar running surfaces, not a narrow-use walker device with a flat or uniplanar surface, such as in Magid. This is because the design and engineering requirements of a treadmill having a curved running surface differ from those of a treadmill with a flat or uniplanar running surface. Design and engineering requirements urge a POSA to avoid combining the teachings of Socwell, Chickering, or other non-planar or multi-planar treadmills with Magid, particularly given the above, where Magid expressly teaches away from a single-belt treadmill.

Id. at 43–44 (citing Ex. 2018 ¶¶ 197–205)

We do not agree with Patent Owner's characterization of Magid as being narrowly related to two-belt walkers used just for therapy. As Petitioner points out, Magid discloses that its walker can be broadly used by people exercising. Pet. Reply 13 n 2 (citing Ex. 1036 ¶ 57); Ex. 1012, 1:53–59, 7:61–67.

Further, we are persuaded by Petitioner and Dr. Giachetti's testimony that a POSA would have combined the manual curved treadmill disclosed in Chickering with the known technique of a one-way clutch to prevent belt motion in a forward direction as disclosed in Magid in order to prevent a user from falling off the treadmill while mounting or dismounting. Pet. 85–90 (citing Ex. 1003 ¶¶ 187–198); *see also* Pet. Reply 13–15 (citing Ex. 1036 ¶¶ 62–65).

Patent Owner argues that Petitioner's motivations to combine are fraught with hindsight bias because "Petitioner does not adequately explain why a POSA would have been specifically motivated to select the mechanism Petitioner relies on, rather than one of the dozens of other options Sclater presents." PO Resp. 44–54. In particular, Patent Owner argues that Sclater does not specifically disclose that the sprag type clutch relied upon by Petitioner reduces noise and improves durability. *Id.*

The test for obviousness is not whether the claimed invention is expressly disclosed in the references, but whether the claimed subject matter would have been obvious to those of ordinary skill in the art in light of the *combined teachings* of those references. *In re Keller*, 642 F.2d 413, 425 (CCPA 1981). In an obviousness analysis, it is not necessary to find precise disclosure directed to the specific subject matter claimed because inferences and creative steps that a person of ordinary skill in the art would employ can be taken into account. *See KSR*, 550 U.S. at 418. In this regard, "[a] person of ordinary skill is also a person of ordinary creativity, not an automaton." *Id.* at 421. "[I]n many cases a person of ordinary skill will be able to fit the teachings of multiple patents together like pieces of a puzzle." *Id.* As the U.S. Supreme Court has stated, obviousness requires an "expansive and flexible" approach that asks whether the claimed

improvement is more than a "predictable variation" of "prior art elements according to their established functions." *Id.* at 415, 417. "A factfinder should be aware, of course, of the distortion caused by hindsight bias and must be cautious of arguments reliant upon *ex post* reasoning." *Id.* at 421 (citing *Graham*, 383 U.S. at 36). "Rigid preventative rules that deny factfinders recourse to common sense, however, are neither necessary under our case law nor consistent with it." *KSR*, 550 U.S. at 421.

Petitioner's evidence sufficiently shows that it would have been obvious to a POSA "to substitute Sclater's one-way sprag-type bearing for Magid's ratchet-and-pawl one-way mechanism to obtain predictable results, e.g., reduced noise and improved durability." Pet. 61; Ex. 1003 ¶ 215. Magid broadly describes its safety device as "[a] unidirectional control means 6, 6'" and describes the unidirectional control means 6, 6' as being a ratchet and pawl mechanism in one embodiment. Ex. 1012, 4:47–55. This suggests that that the unidirectional control means 6, 6' could be a unidirectional control mechanism other than the ratchet and pawl described in one embodiment of Magid. *See also id.* at 7:61–67 (stating that Magid's invention is not limited to the preferred embodiments).

Sclater teaches using a sprag-type clutch for back stopping a conveyor belt. Ex. 1017, 320. A POSA would know that sprag-type clutches were also known for use in exercise equipment. *See* Ex. 1003 ¶¶ 89, 211, 447; Ex. 1018, 52–53; Ex. 1036 ¶ 76.

Dr. Giachetti testifies that "[s]ome common mechanical clutches include ratchet clutches and cam type one-way clutches, such as sprag clutches." Ex. 1003 ¶ 81. Dr. Giachetti testifies that "[r]atchet and pawl clutch mechanisms make noise during operation" because an audible "click" sound is made when the pawl collides with a gear tooth on the ratchet.

Ex. 1003 ¶ 208; *see also id.* ¶ 83 ("A ratchet clutch having a pawl that contacts the gear during overrunning is loud, as compared to other mechanical clutches."). Similarly, Sclater teaches that a friction-type clutch is quieter than a ratchet and pawl mechanism. Ex. 1017, 316. Sclater states:

> Sprags combined with cylindrical rollers in a bearing assembly can provide a simple, low-cost method for meeting the torque and bearing requirements of most machine applications. Designed and built by Est. Nicot of Paris, this unit gives one-direction-only torque transmission in an overrunning clutch. In addition, it also serves as a roller bearing.

Id. at 312.

Dr. Giachetti also testifies that roller clutches are better suited for high-speed freewheeling than ratchet clutches because "the pawl may skip past a few teeth before backstopping the ratchet gear, whereas the sprags are always in contact with the rings and do not need to find a discrete gear tooth to stop" and "because there are multiple sprags, they distribute the load over a larger surface area." Ex. 1003 ¶ 445 (citing Ex. 1017, 303, 320).

Finally, Dr. Giachetti testifies that "[a] POSA would have considered a sprag-type one-way clutch bearing [suitable] for an exercise equipment application, such as a treadmill." Ex. 1003 ¶¶ 91, 211 (citing Ex. 1018, 52–53 (a catalogue describing a sprag type one-way clutch as an option for "exercise equipment").

Given the testimony of Dr. Giachetti as to the knowledge of a POSA and the supporting evidence from Sclater, Petitioner has sufficiently shown that it would have been obvious to a POSA to substitute a one-way sprag type bearing clutch for Magid's ratchet and pawl one-way mechanism in order to reduce noise and improve durability.

Patent Owner's arguments are unpersuasive because they are rigidly focused on the alleged lack of a sufficiently particular disclosure of motivation in Sclater, without taking full account of an ordinarily skilled artisan's "knowledge, creativity, and common sense." *Randall Mfg. v. Rea*, 733 F.3d 1355, 1362 (Fed. Cir. 2013).

We determine that Petitioner's analysis and evidence sufficiently shows that the combination of Chickering, Magid, and Sclater teaches a safety device as recited by claim 30.

2. Secondary Considerations

We have considered Patent Owner's arguments and evidence concerning secondary considerations of evidence, discussed below, as part of our obviousness analysis for this ground. Patent Owner's evidence of secondary considerations, however, do not outweigh Petitioner's showing that claim 30 would have been obvious over Chickering, Magid, and Sclater.

3. Conclusion as to claim 30

After considering Petitioner's evidence and analysis, and taking into account Patent Owner's arguments and evidence, we determine that Petitioner has shown by a preponderance of the evidence that claim 30 is unpatentable over Chickering, Magid, and Sclater.

4. Independent Claims 37, 50, and 57

Petitioner relies upon a similar analysis to show that independent claims 37, 50, and 57 are unpatentable as the analysis it relies upon to show claim 30 is unpatentable. *See* Pet. 79–97. We note that Petitioner provides additional explanation for limitations of claims 37, 50, and 57 that slightly differ from claim 30. *See id.*

Patent Owner relies upon the same arguments it made in connection with claim 30. *See generally* PO Resp.

For similar reasons as discussed above with respect to claim 30, we determine that Petitioner has shown by a preponderance of the evidence that claims 37, 50, and 57 are unpatentable over Chickering, Magid, and Sclater.

5. Dependent Claims 31–34, 38, 39, 41, 45–49, and 59

Petitioner contends that the additional limitations of dependent claims 31–34, 38, 39, 41, 45–49, and 59 are unpatentable over Chickering, Magid, and Sclater. Pet. 97–103. Patent Owner does not dispute that the combination of Chickering, Magid, and Sclater disclose the additional limitations.

After considering Petitioner's evidence and analysis, we determine that Petitioner has shown by a preponderance of the evidence that claims 31–34, 38, 39, 41, 45–49, and 59 are unpatentable over Chickering, Magid, and Sclater.

H. Secondary Considerations of Nonobviousness

1. Legal Standards

Objective evidence of non-obviousness "may often be the most probative and cogent evidence in the record" and "may often establish that an invention appearing to have been obvious in light of the prior art was not." *Transocean Offshore Deepwater Drilling, Inc. v. Maersk Drilling USA, Inc.*, 699 F.3d 1340, 1349 (Fed. Cir. 2012). Thus, notwithstanding what the teachings of the prior art would have suggested to one skilled in the art, secondary considerations (objective evidence of nonobviousness) may lead to a conclusion that the challenged claims would not have been obvious. *In re Piasecki*, 745 F.2d 1468, 1471–72 (Fed. Cir. 1984). Thus, our obviousness analysis includes consideration and weighing of Patent Owner's indicia of nonobviousness.

In order to accord substantial weight to secondary considerations in an obviousness analysis, "the evidence of secondary considerations must have a 'nexus' to the claims, *i.e.*, there must be 'a legally and factually sufficient connection' between the evidence and the patented invention." *Henny Penny Corp. v. Frymaster LLC*, 938 F.3d 1324, 1332 (Fed. Cir. 2019) (quoting *Demaco Corp. v. F. Von Langs-dorff Licensing Ltd.*, 851 F.2d 1387, 1392 (Fed. Cir. 1988)); *Quanergy Sys., Inc. v. Velodyne Lidar USA, Inc.*, 24 F.4th 1406, 1417 (Fed. Cir. 2022).

Although the patent owner bears the initial burden of proving a nexus (*WMS Gaming Inc. v. Int'l Game Tech.*, 184 F.3d 1339, 1359 (Fed. Cir. 1999)), a presumption of nexus may be appropriate if the patent owner shows "the asserted objective evidence is tied to a specific product and that product 'embodies the claimed features, and is coextensive with them.'" *Polaris Indus, Inc. v. Arctic Cat, Inc.*, 882 F.3d 1056, 1072 (Fed. Cir. 2018) (quoting *Brown & Williamson Tobacco Corp. v. Philip Morris Inc.*, 229 F.3d 1120, 1130 (Fed. Cir. 2000) (emphasis added)); *Quanergy*, 24 F.4th at 1417. On the other hand, "[w]hen the [product] is not coextensive with the patented invention—for example, if the patented invention is only a component of a commercially successful machine or process," the patent owner is not entitled to a presumption of nexus. *Demaco*, 851 F.2d at 1392.

A patent owner may establish nexus, either through (1) the use of a rebuttable presumption that arises when certain conditions are met or (2) a direct showing of nexus.

2. Rebuttable Presumption of Nexus

In the first, a patent owner may rely on a rebuttable presumption of nexus as follows:

> As first recognized in *Demaco* . . . , a patentee is entitled to a rebuttable presumption of nexus between the asserted evidence of secondary considerations and a patent claim if the patentee shows that the asserted evidence is tied to a specific product and that the product "is the invention disclosed and claimed." 851 F.2d at 1392 (emphasis added). That is, presuming nexus is appropriate "when the patentee shows that the asserted objective evidence is tied to a specific product and that product 'embodies the claimed features, and is coextensive with them.'" *Polaris Indus., Inc. v. Arctic Cat, Inc.*, 882 F.3d 1056, 1072 (Fed. Cir. 2018) (quoting *Brown & Williamson Tobacco Corp. v. Philip Morris Inc.*, 229 F.3d 1120, 1130 (Fed. Cir. 2000)) . . .
>
> . . . Whether a product is coextensive with the patented invention, and therefore whether a presumption of nexus is appropriate in a given case, is a question of fact.

Fox Factory, Inc. v. SRAM, LLC, 944 F.3d 1366, 1373 (Fed. Cir. 2019).

The court in *Fox Factory* further explained, with respect to a presumption of nexus, that "the degree of correspondence between a product and a patent claim falls along a spectrum," and that "[a]lthough we do not require the patentee to prove perfect correspondence to meet the co-extensiveness requirement, what we do require is that the patentee demonstrate that the product is essentially the claimed invention." *Id.* at 1374. The court in *Fox Factory* rejected the patent owner's argument that the co-extensiveness requirement is simply an inquiry into "whether the patent claims broadly cover the product that is the subject of the evidence of secondary considerations." *Id.* at 1377. Thus, simply showing that a patent claim broadly covers the commercial product being asserted as objective evidence of nonobviousness is not enough to show they are coextensive. *Id.*

That is because "[a] patent claim is not coextensive with a product that includes a 'critical' unclaimed feature that is claimed by a different patent and that materially impacts the product's functionality." *Id.* at 1375. In contrast, "if the unclaimed features amount to nothing more than additional insignificant features, presuming nexus may nevertheless be appropriate." *Id.* at 1374. Based on the facts of the case in *Fox Factory*, the court found that "nexus may not be presumed" because "there are one or more features not claimed by the [challenged patent] that materially impact the functionality" of the products on which patent owner's presumption argument is based and the court rejected arguments that the patent claims broadly cover the product. *Id.* at 1376–1377.

Patent Owner argues that different models of its curved manual treadmills practice and are coextensive with the claims of the '884 patent. PO Resp. 57–58. They are 1) the CURVE treadmill (a.k.a SpeedBoard treadmill and CURVE Legacy treadmill); 2) Curve XL treadmill, 3) Curve LTG treadmill, 4) Curve FTG treadmill; 5) Curve 3.0 treadmill, 6) Curve Trainer, and 7) EcoMill and EcoMill Legacy treadmills. *Id.*

To support its argument, Patent Owner relies upon a claim chart purporting to show how the CURVE treadmill meets the claimed invention and the testimony of Dr. Blair. *Id.* at 56–69; Ex. 2018 ¶¶ 226–228 (citing Ex. 2027).

However, Patent Owner and Dr. Blair indicate that a number of its curved manual treadmills had different distinguishing features—features that are unclaimed. Patent Owner indicates that the Curve XL offered a larger running surface, that the Curve LTG treadmill is a lighter duty version, that Curve FTG treadmill has different handrails and additional features for providing different levels of resistance, that the Curve 3.0 has upgraded

software and sophisticated electronics, and the Curve Trainer has a less steep curve that provides a quieter and quicker acceleration, and the EcoMill and EcoMill Legacy has an onboard generators system that produces power for the display and USB charging station. Further, as Petitioner points out, we note that Patent Owner evidence points to unclaimed features such as a durable WOODWAY membrane technology, displays, heart-rate monitors, speed outputs, adjustable resistance, sophisticated load cells, data acquisition boards and software, and runner feedback system. Pet. Reply 26–27 (citing Ex. 1037, 27:13–25, 28:20–29:13; Ex. 2028, 77–79); Ex. 2057, 3.

Patent Owner and Dr. Blair broadly assert that these unclaimed features are not significant for the purposes of establishing nexus. PO Resp. 57–58; Ex. 2018 ¶¶ 226–228. But neither Patent Owner or Dr. Blair sufficiently explains why these features are insignificant and, at best, Dr. Blair's testimony shows that the '884 patent's claims broadly cover the CURVE treadmill only. PO Resp. 57–58; Ex. 2018 ¶¶ 226–228.

After reviewing Patent Owner's evidence of coextensions, determine that Patent Owner's evidence does not sufficiently establish that the different models of its curved manual treadmills are coextensive with the claims of the '884 patent. Patent Owner, thus, is not entitled to a presumption of nexus.

3. Direct Showing of Nexus

"A finding that a presumption of nexus is inappropriate does not end the inquiry into secondary considerations," however. *Id.* at 1373. "To the contrary, the patent owner is still afforded an opportunity to prove nexus by showing that the evidence of secondary considerations is the 'direct result of the unique characteristics of the claimed invention.'" *Id.* at 1373−74 (quoting *In re Huang*, 100 F.3d 135, 140 (Fed. Cir. 1996)). "Where the

offered secondary consideration actually results from something other than what is both claimed and novel in the claim, there is no nexus to the merits of the claimed invention," meaning that "there must be a nexus to some aspect of the claim not already in the prior art." *In re Kao*, 639 F.3d 1057, 1068−69 (Fed. Cir. 2011).

Ultimately, we must weigh Patent Owner's objective evidence in the context of whether the claimed invention as a whole would have been obvious to a skilled artisan. *WBIP, LLC v. Kohler Co.*, 829 F.3d 1317, 1331−32 (Fed. Cir. 2016). Only if the patent owner presents a *prima facie* case of nexus does the burden of production shift to the patent challenger to adduce evidence showing that any commercial success or industry praise was due to extraneous factors other than the patented invention. *Demaco*, 851 F.2d at 1393.

a) Commercial Success

"Evidence of commercial success, or other secondary considerations, is only significant if there is a nexus between the claimed invention and the commercial success." *Ormco Corp. v. Align Tech., Inc.*, 463 F.3d 1299, 1311–12 (Fed. Cir. 2006). "When a patentee can demonstrate commercial success, usually shown by significant sales in a relevant market, and that the successful product is the invention disclosed and claimed in the patent, it is presumed that the commercial success is due to the patented invention." *J.T. Eaton & Co. v. Atlantic Paste & Glue Co.*, 106 F.3d 1563, 1571 (Fed. Cir. 1997).

Patent Owner argues that it enjoyed 100% market share of the curved, manual treadmill market and made significant sales. PO Resp. 69–71. Citing to the testimony of Mr. Weber, Patent Owner asserts that "[t]he

commercial success of Patent Owner's products was based on the key features of the claimed invention." *Id.* at 71 (citing Ex. 2020 ¶¶ 34–41).

Mr. Weber is Patent Owner's Director of Sales and Marketing. Ex. 2020 ¶ 2. Mr. Weber testifies that safety is a critical factor for commercial success and in particular the use of a safety mechanism to control unintended rotation of the running bet. *Id.* ¶ 34 ("Woodway's line of curved, manual treadmills would not be commercially successful without such a safety feature"). *Id.* ¶¶ 37–41.

Petitioner argues that Patent Owner's evidence does not establish that Patent Owner is commercially successful in the field of manual treadmills and not just curved manual treadmills and that Patent Owner's evidence does not establish a nexus between its sales and the claimed safety mechanism. *See* Pet. Reply 20–30.

We agree with Petitioner that Patent Owner has not sufficiently established a nexus between its sales and the alleged commercial success. We do not credit Mr. Weber's testimony that the alleged commercial success of Woodway's curved, manual treadmills was due to the safety mechanism. As Petitioner points out, Mr. Weber's testimony indicates that Woodway's alleged commercial success could be due to other factors, such as Woodway's reputation. Pet. Reply 27 (citing Ex. 2020 ¶¶ 2, 13).

4. Industry Praise

"Evidence that the industry praised a claimed invention or a product that embodies the patent claims weighs against an assertion that the same claim would have been obvious." *Lectrosonics, Inc. v. Zaxcon, Inc.*, IPR2018-01129, Paper 33 at 68 (PTAB Jan. 24, 2020) (citing *WBIP*, 829 F.3d at 1334).

Patent Owner argues that its "CURVE line of treadmills garnered significant attention and praise in the industry." PO Resp. 70–72; PO Sur-reply 24. For support, Patent Owner asserts that its Curve Legacy was nominated for an Innovation Award by FIBO (Ex. 2020 ¶ 56, Ex. 2057), cites the testimony of Mr. Weber, Patent Owner's Director of Sales and Marketing (Ex. 2020 ¶¶ 43–56), and certain publications (Ex. 2045, 5; Ex. 2046, 3, 5; and Ex. 2052, 1). PO Resp. 72–73. Additionally, Mr. Weber's testimony refers to certain publications that are at Exhibits 2047–2057.

We have reviewed all of Patent Owner's cited evidence and determine that it is insufficient to show industry praise. *See* Pet. Reply 30–31. Although Patent Owner's evidence praises the CURVE lines to some extent, the praise is because of features not claimed and not for the claimed invention, which includes the claimed safety device. *See* Exs. 2047–2057; Ex. 1037, 67:8–16. For example, Exhibit 2057 indicates that the Curve Legacy was nominated for the Innovation Award by FIBO because it is "environmentally friendly", "has . . . no wear and tear components," "not necessary to replace the deck or running belt," includes "[a] durable WOODWAY membrane technology," and provides "direct feedback." Ex. 2057, 3. Additionally, Exhibit 2047 is insufficient because it is Patent Owner's own press release and, thus, is praise from itself. None of the cited evidence mentions the claimed safety device feature. *See* Exs. 2047–2057.

5. Copying

> [C]opying requires evidence of efforts to replicate a specific product, which may be demonstrated through internal company documents, direct evidence such as disassembling a patented prototype, photographing its features, and using the photograph as a blueprint to build a replica, or access to the patented product combined with substantial similarity to the patented product.

Wyers v. Master Lock Co., 616 F.3d 1231, 1246 (Fed. Cir. 2010).

Patent Owner argues that "a number of companies" have launched products that are close copies of products in its CURVE line. PO Resp. 73–77; *see also* PO Sur-reply 23–25. As evidence of copying, Patent Owner relies upon the testimony of its employee Mr. Weber that a number of companies have products that are allegedly copies of Patent Owner's CURVE line of products. PO Resp. 73 (citing Ex. 2020 ¶¶ 57–68). Mr. Weber's testimony relies upon certain photographs to show the alleged copying (Exs. 2058–2065). Petitioner also alleges copying by a licensee and Patent Owner. PO Resp. 74.

Petitioner responds that Patent Owner's evidence does not show evidence of an effort to replicate a specific product. Pet. Reply 31–35.

We have reviewed all of Patent Owner's cited evidence and determine that it is insufficient to show copying of the claimed invention. Exhibits 2058–2065 make no mention of a feature resembling the claimed safety device. We also do not credit the conclusory testimony of Mr. Weber, Patent Owner's Director of Sales and Marketing, concerning his observations of alleged copying by others. Ex. 2020 ¶¶ 57–67. Finally, Patent Owner's evidence does not sufficiently show copying of a specific product.

6. Long-Felt but Unsolved Need & Passage of Time

Long-felt need can be shown by evidence that indicates that the prior art had a recognized need for a solution to the problem, and that others had tried and failed to find a solution to that problem. *Millennium Pharms., Inc. v. Sandoz Inc.*, 862 F.3d 1356, 1369 (Fed. Cir. 2017).

Patent Owner asserts that "[b]efore the priority date of the '884 patent, no one had successfully commercialized a curved, manual treadmill." PO

Resp. 77; PO Sur-reply 25–26. Patent Owner additionally argues that the passage of time between the prior art and the invention shows nonobviousness. PO Resp. 78—79.

Petitioner argues that Patent Owner's evidence fails to show that other POSA tried and failed to find a solution. Pet. Reply 35–36.

We have reviewed all of Patent Owner's cited evidence and determine that it is insufficient to show copying of the claimed invention. *See id.* Patent Owner's evidences does not sufficiently show that a POSA recognized a need that was long-felt or that others had tried and failed to solve the problems. None of the cited evidence describes failed efforts of others to solve the specific problems addressed by the claimed invention, such as a safety device that prevents bidirectional movement.

7. Conclusion as to Secondary Considerations

We have considered all of Patent Owner's arguments and evidence concerning secondary considerations. We determine that Patent Owner has not sufficiently establish a nexus between the unique features of the claimed invention and the evidence of secondary considerations. We, thus, give Patent Owner's evidence little weight.

III. CONCLUSION[9]

After considering the evidence and arguments presented in the Petition and Preliminary Response, determine Petitioner has established by a

[9] Should Patent Owner wish to pursue amendment of the challenged claims in a reissue or reexamination proceeding subsequent to the issuance of this decision, we draw Patent Owner's attention to the April 2019 *Notice Regarding Options for Amendments by Patent Owner Through Reissue or Reexamination During a Pending AIA Trial Proceeding.* *See* 84 Fed. Reg. 16,654 (Apr. 22, 2019). If Patent Owner chooses to file a reissue application

preponderance of the evidence that claims 30–34, 37–39, 41, 45–49, 57, and 59 are unpatentable and has failed to establish by a preponderance of the evidence that claims 40, 42–45, and 50–54 are unpatentable.

In summary:

Claim(s)	**35 U.S.C. §**	**Reference(s)/Basis**	**Claim(s) Shown Unpatentable**	**Claim(s) Not Shown Unpatentable**
30–34, 37–43, 45–50, 52–54, 57, 59	103	Schönenberger, Socwell, Magid, Sclater		30–34, 37–43, 45–50, 52–54, 57, 59
44, 51	103	Schönenberger, Socwell, Magid, Sclater, Skowronski		44, 51
30–34, 37–54, 57, 59	103	Schönenberger, Socwell, Magid, Sclater		30–34, 37–54, 57, 59
30–34, 37–39, 41, 45–49, 57, 59	103	Chickering, Magid, Sclater	30–34, 37–39, 41, 45–49, 57, 59	
Overall Outcome			30–34, 37–39, 41, 45–49, 57, 59	40, 42–45, 50–54

or a request for reexamination of the challenged patent, we remind Patent Owner of its continuing obligation to notify the Board of any such related matters in updated mandatory notices. *See* 37 C.F.R. § 42.8(a)(3), (b)(2).

IV. ORDER

In consideration of the foregoing, it is hereby:

ORDERED that claims 30–34, 37–39, 41, 45–49, 57, and 59 are unpatentable, and

FURTHER ORDERED that, because this is a final written decision, parties to the proceeding seeking judicial review of the decision must comply with the notice and service requirements of 37 C.F.R. § 90.2.

FOR PETITIONER:

Andrew B. Turner
John M. Halan
Rebecca J. Cantor
Kyle G. Konz
BROOKS KUSHMAN P.C.
atruner@brookskushman.com
jhalan@brookskushman.com
rcantor@brookskushman.com
kkonz@brookskushman.com

FOR PATENT OWNER:

Richard J. McKenna
Kadie M. Jelenchick
FOLEY & LARDNER LLP
rmckenna@foley.com
kjelenchick@foley.com