US006748471B1

(12) **United States Patent**
**Keeney et al.**

(10) **Patent No.: US 6,748,471 B1**
(45) **Date of Patent: Jun. 8, 2004**

(54) **METHODS AND APPARATUS FOR REQUESTING AND RECEIVING A PRINT JOB VIA A PRINTER POLLING DEVICE ASSOCIATED WITH A PRINTER**

(75) Inventors: **Richard A. Keeney**, Eagam, MN (US); **Philip A. Lodwick**, Richfield, MN (US); **Farhad Nourbakhsh**, Apple Valley, MN (US); **Loren Schoenzeit**, Orono, MN (US); **Ofer Tenenbaum**, San Jose, CA (US)

(73) Assignee: **Electronics for Imaging, Inc.**, Foster City, CA (US)

( * ) Notice: Subject to any disclaimer, the term of this patent is extended or adjusted under 35 U.S.C. 154(b) by 946 days.

(21) Appl. No.: **09/688,567**

(22) Filed: **Oct. 16, 2000**

(51) **Int. Cl.**[7] ..... **G06F 11/00**

(52) **U.S. Cl.** ..... **710/220**; 710/306; 709/203; 358/1.15

(58) **Field of Search** ..... 710/220, 46, 47, 710/306, 62, 63–64, 72; 709/201–203, 217, 227, 311; 358/1.15–1.16, 1.1–1.13, 448, 452

(56) **References Cited**

U.S. PATENT DOCUMENTS

| | | | |
|---|---|---|---|
| 5,287,194 | A | 2/1994 | Lobiondo |
| 5,450,571 | A | 9/1995 | Rosekrans et al. |
| 5,559,933 | A | 9/1996 | Boswell |
| 5,625,757 | A | 4/1997 | Kageyema |
| 5,727,135 | A | 3/1998 | Webb et al. |
| 5,727,156 | A | 3/1998 | Herr-Hoyman |
| 5,799,206 | A | 8/1998 | Kitagawa |
| 5,802,260 | A | 9/1998 | Shimakawa |
| 5,881,213 | A | 3/1999 | Shaw et al. |
| 5,898,823 | A | 4/1999 | Sorkin |
| 5,978,560 | A | 11/1999 | Tan et al. |
| 5,982,994 | A | 11/1999 | Mori et al. |
| 5,995,723 | A | 11/1999 | Sperry |

(List continued on next page.)

FOREIGN PATENT DOCUMENTS

| | | | |
|---|---|---|---|
| DE | 196 41 357 | 4/1998 | |
| EP | 0 598 513 A1 * | 10/1993 | ..... G06F/3/12 |

(List continued on next page.)

OTHER PUBLICATIONS

Bengtson, US2001/0037462.*

Web Pages from hpwire.com web site, including white paper entitled "HP Wire: Enabling E–Printing Solutions for the Enterprise," by Lim Chuin Kiat and Wilson Wong (undated), printed from the web site on Jan. 16, 2001 (8 pages total).

(List continued on next page.)

*Primary Examiner*—Paul R. Myers
*Assistant Examiner*—Raymond N Phan
(74) *Attorney, Agent, or Firm*—Barry R. Lipsitz; Douglas M. McAllister

(57) **ABSTRACT**

The present invention relates to methods and apparatus for requesting and receiving print jobs over a communications network. In particular, the present invention enables a user to obtain print jobs at a location which may be unspecified, and which may be remote from the source of the print job. A spooling server is used to store a print job received via the network from a print job source. A printer polling device, which may be used at a location remote from the client device, is capable of polling the spooling server via the network to identify whether any print jobs associated with the printer polling device are available for printing at a printer currently associated with the polling device. The spooling server need not initiate contact with the printer through a firewall, since it is polled by the printer polling device. Thus, network security is maintained.

**88 Claims, 11 Drawing Sheets**

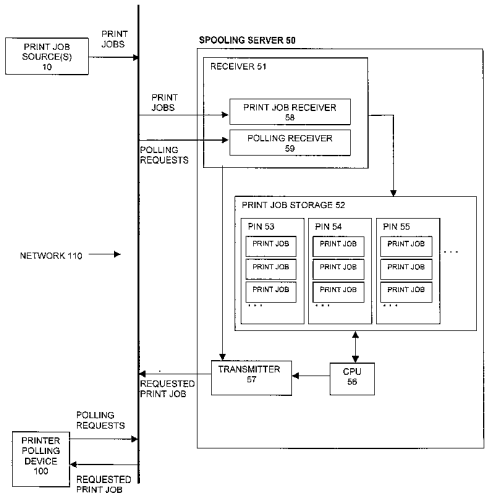




Lexmark, Exhibit 1004
Lexmark v. Flexiworld

U.S. PATENT DOCUMENTS

| | | | | | |
|---|---|---|---|---|---|
| 6,003,069 | A | | 12/1999 | Cavill | |
| 6,006,281 | A | | 12/1999 | Edmunds | |
| 6,012,083 | A | | 1/2000 | Savitzky et al. | |
| 6,023,684 | A | | 2/2000 | Pearson | |
| 6,043,898 | A | | 3/2000 | Jacobs | |
| 6,043,909 | A | | 3/2000 | Holub | |
| 6,094,679 | A | | 7/2000 | Teng et al. | |
| 6,125,372 | A | | 9/2000 | White | |
| 6,240,456 | B1 | * | 5/2001 | Teng et al. | 709/230 |
| 6,298,445 | B1 | * | 10/2001 | Shostack et al. | 713/201 |
| 6,307,640 | B1 | | 10/2001 | Motegi | |
| 6,327,045 | B1 | * | 12/2001 | Teng et al. | 358/1.15 |
| 6,334,142 | B1 | | 12/2001 | Newton et al. | |
| 6,337,745 | B1 | | 1/2002 | Aiello, Jr. et al. | |
| 6,351,317 | B1 | * | 2/2002 | Sasaki et al. | 358/1.15 |
| 6,378,070 | B1 | * | 4/2002 | Chan et al. | 713/155 |
| 6,466,328 | B1 | * | 10/2002 | Bradley et al. | 358/1.15 |
| 6,615,234 | B1 | * | 9/2003 | Adamske et al. | 709/203 |

FOREIGN PATENT DOCUMENTS

| | | | | | |
|---|---|---|---|---|---|
| EP | 0 598 513 | | | 5/1994 | |
| EP | 0 872 792 | A2 | | 10/1998 | |
| EP | 0 910 203 | | | 4/1999 | |
| EP | 0 952 513 | | | 10/1999 | |
| EP | 0 974 890 | A2 | | 1/2000 | |
| EP | 0 974 892 | | | 1/2000 | |
| EP | 0 977 113 | A2 | | 2/2000 | |
| EP | 1 026 576 | A2 | * | 2/2000 | G06F/3/12 |
| EP | 0 991 227 | A2 | | 4/2000 | |
| EP | 1 026 576 | | | 8/2000 | |
| WO | WO 98/51054 | | * | 5/1998 | H04L/29/06 |

OTHER PUBLICATIONS

PrinterOn Corporation *Products and Solutions* white paper, by Patrick Pidduck, Jul. 27, 2000 (13 pages).

Web page from kinkos.com web site, printed from the web site on Jan. 16, 2001 (1 page).

Web pages from weborder.kinkos.com web site, printed from the web site on Jan.16, 2001 (4 pages).

* cited by examiner



Lexmark, Exhibit 1004
Lexmark v. Flexiworld

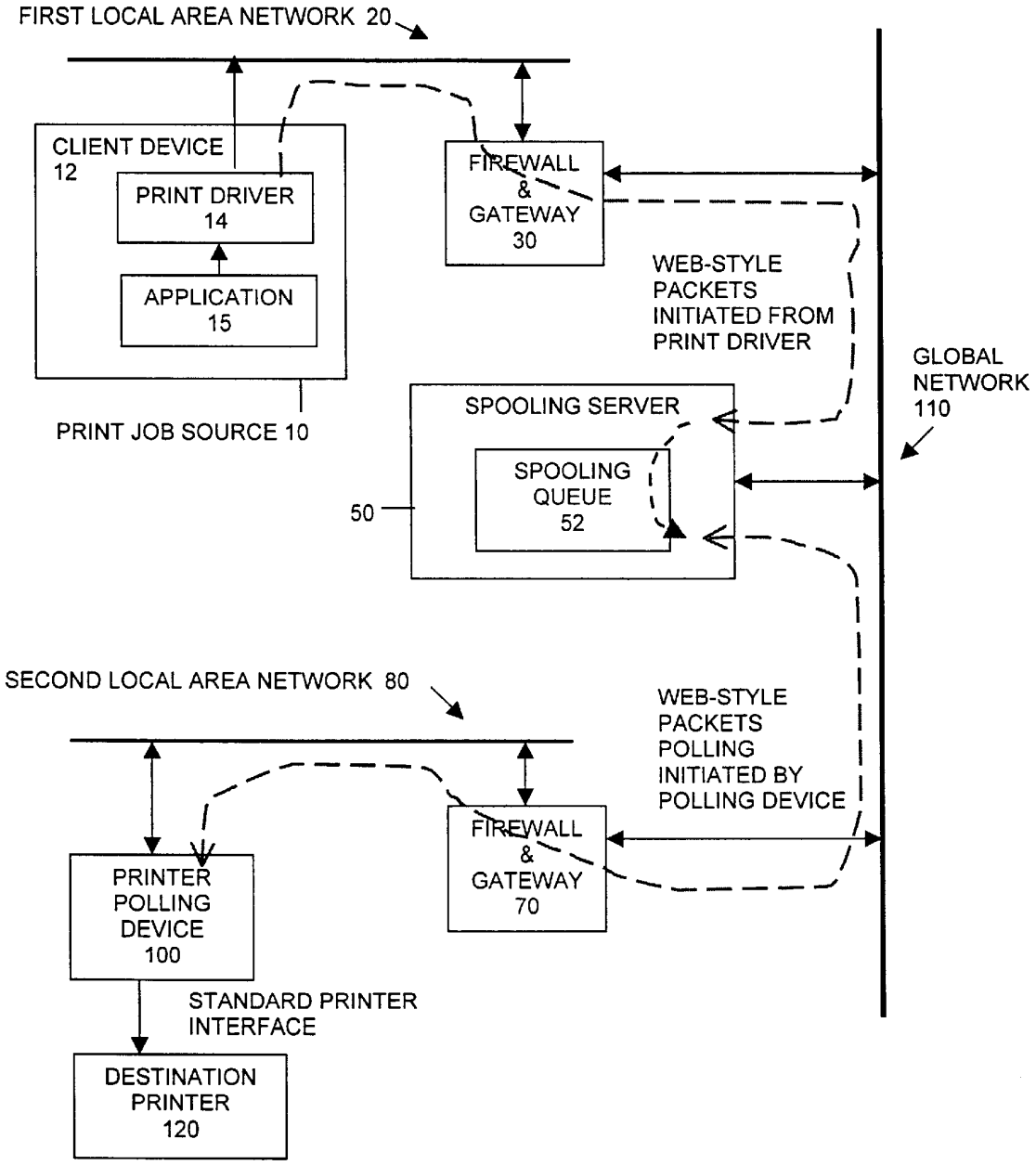


FIG. 1



Lexmark, Exhibit 1004
Lexmark v. Flexiworld

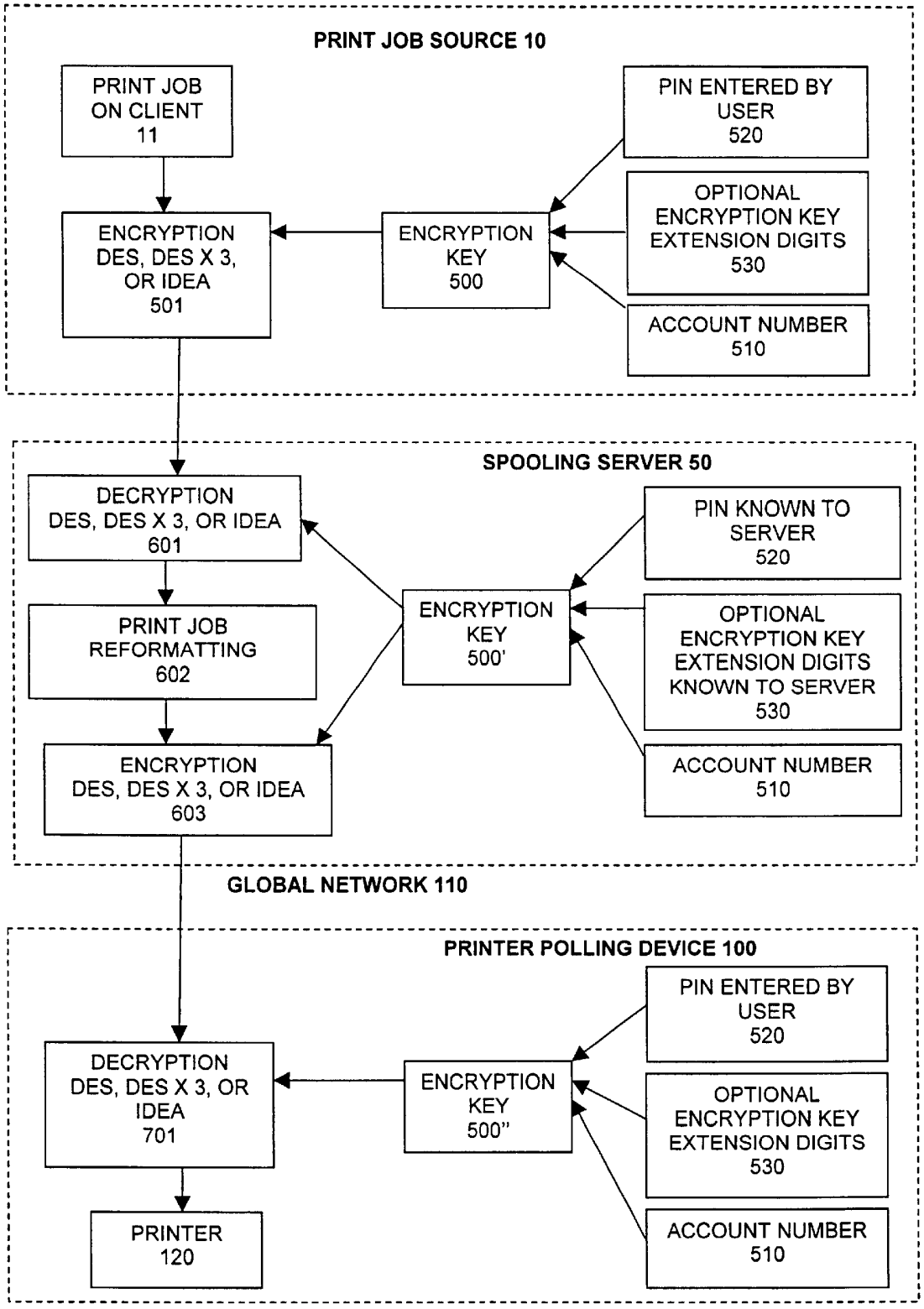


FIG. 2



Lexmark, Exhibit 1004
Lexmark v. Flexiworld

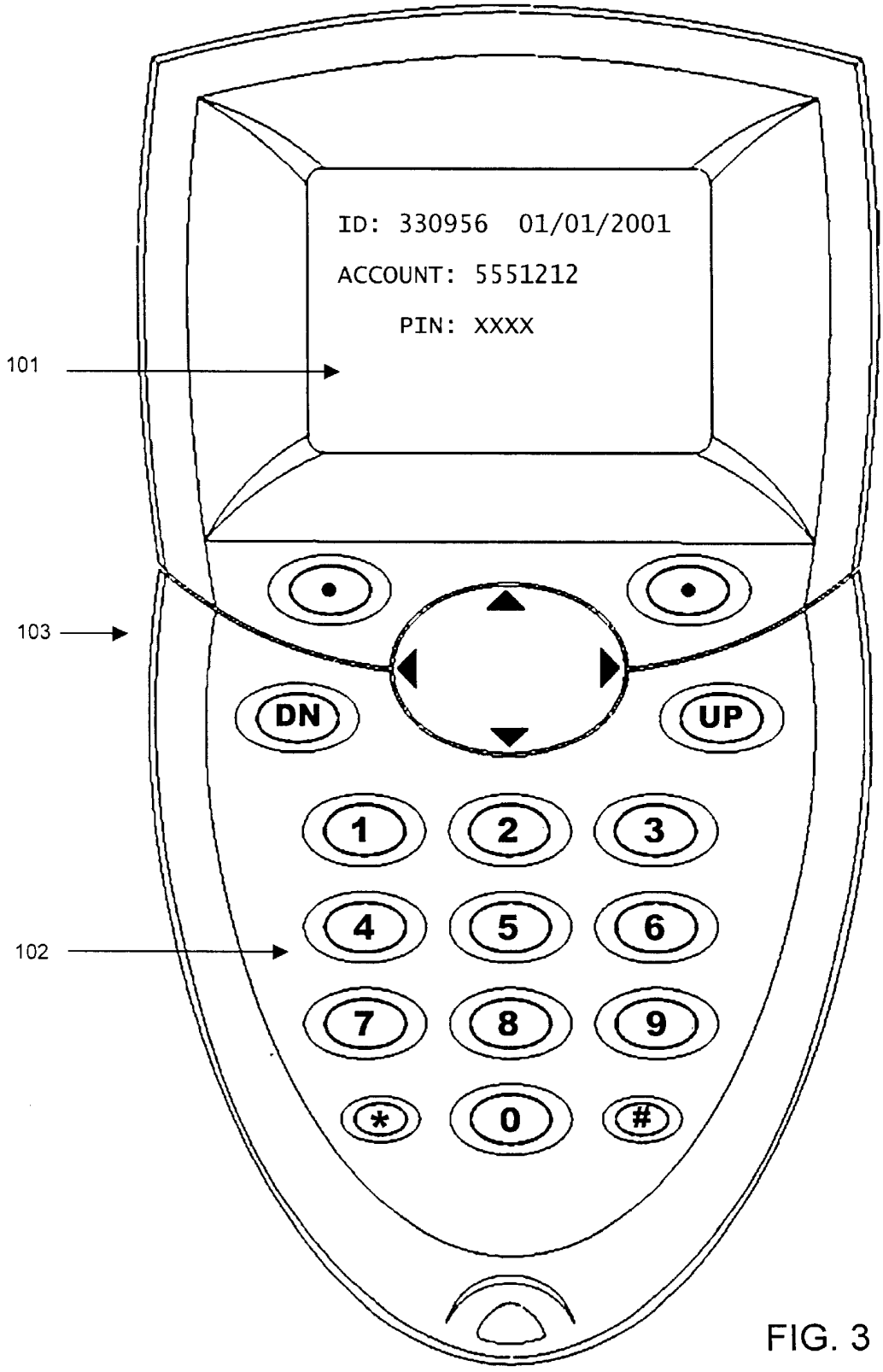


FIG. 3



Lexmark, Exhibit 1004
Lexmark v. Flexiworld

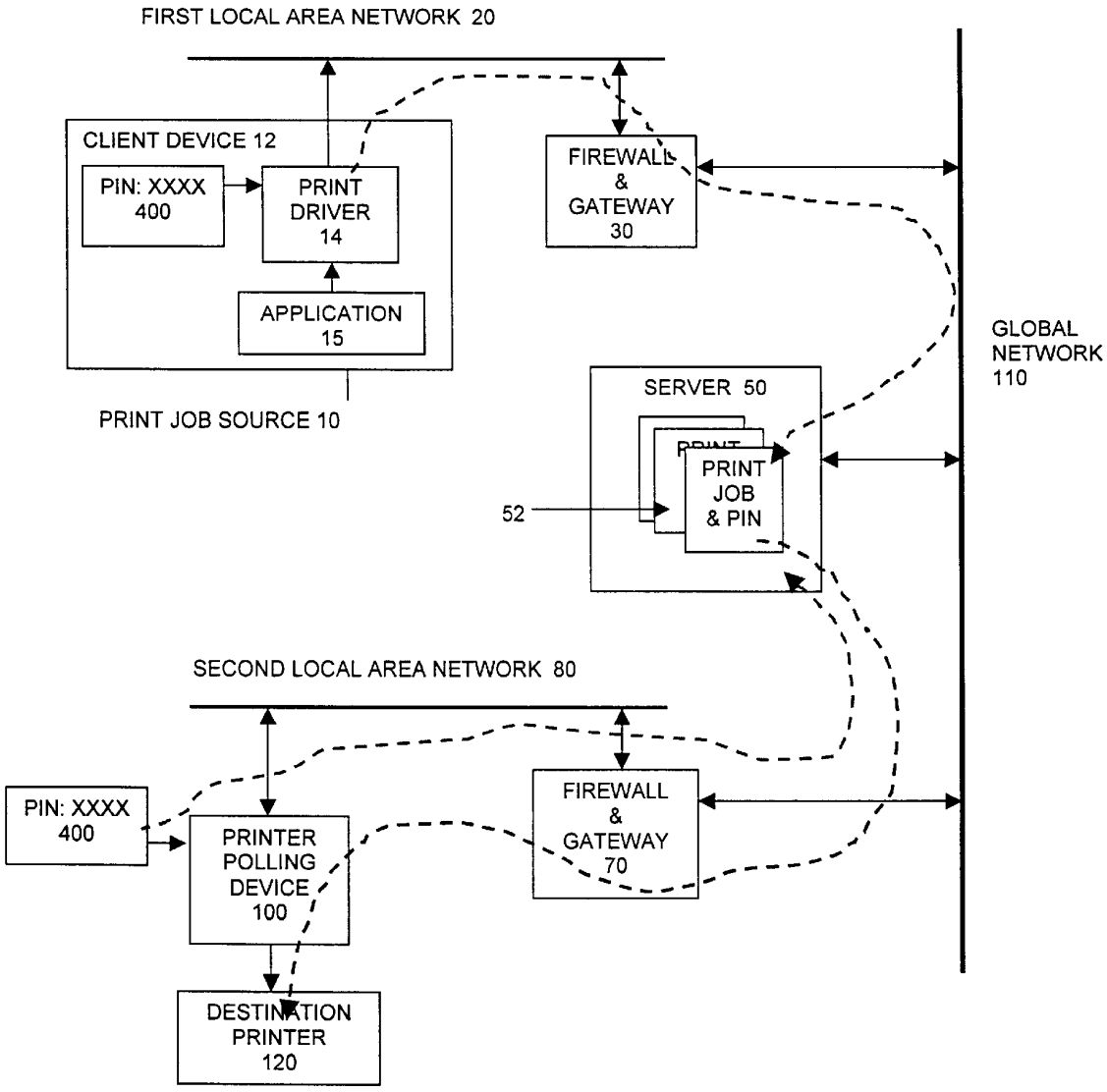


FIG. 4



Lexmark, Exhibit 1004
Lexmark v. Flexiworld

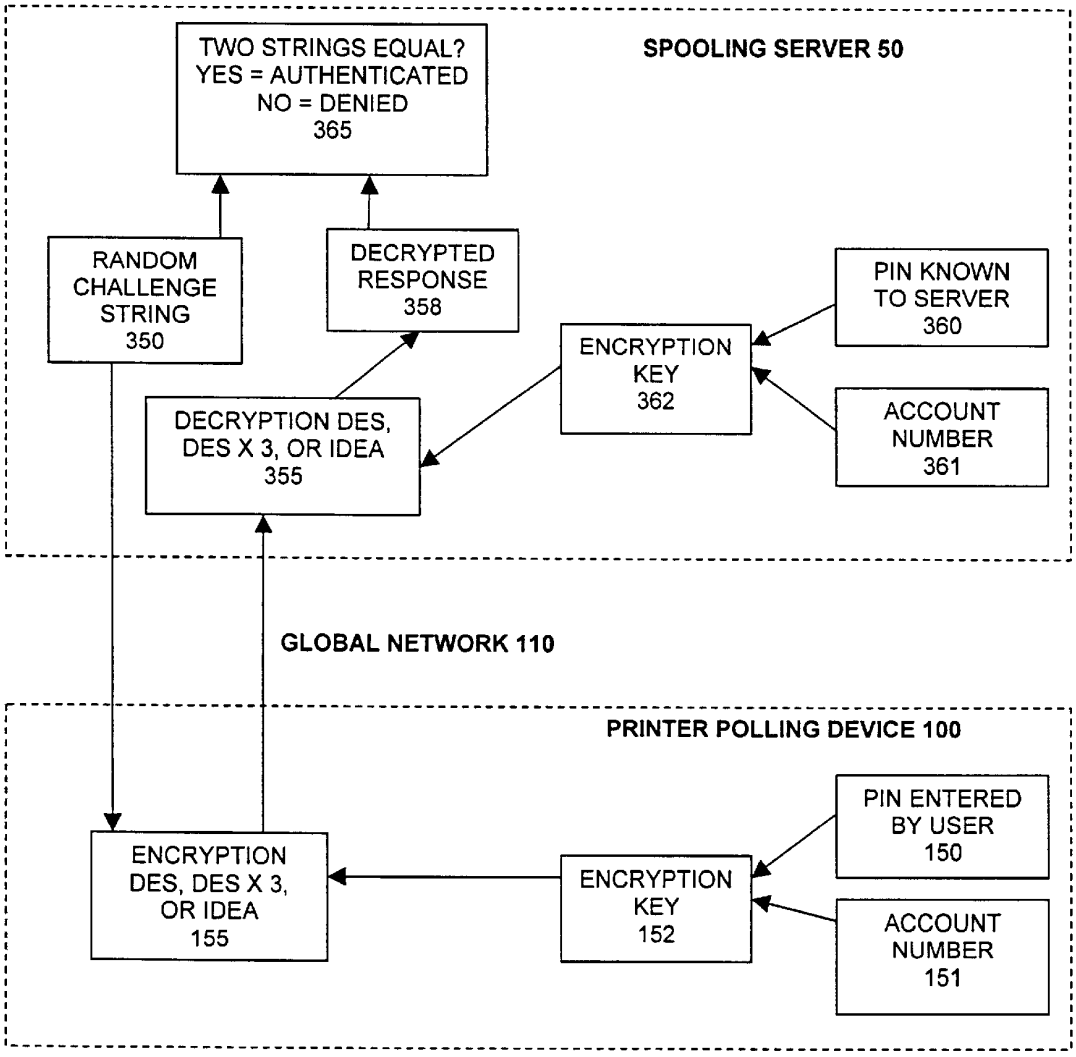


FIG. 5



Lexmark, Exhibit 1004
Lexmark v. Flexiworld

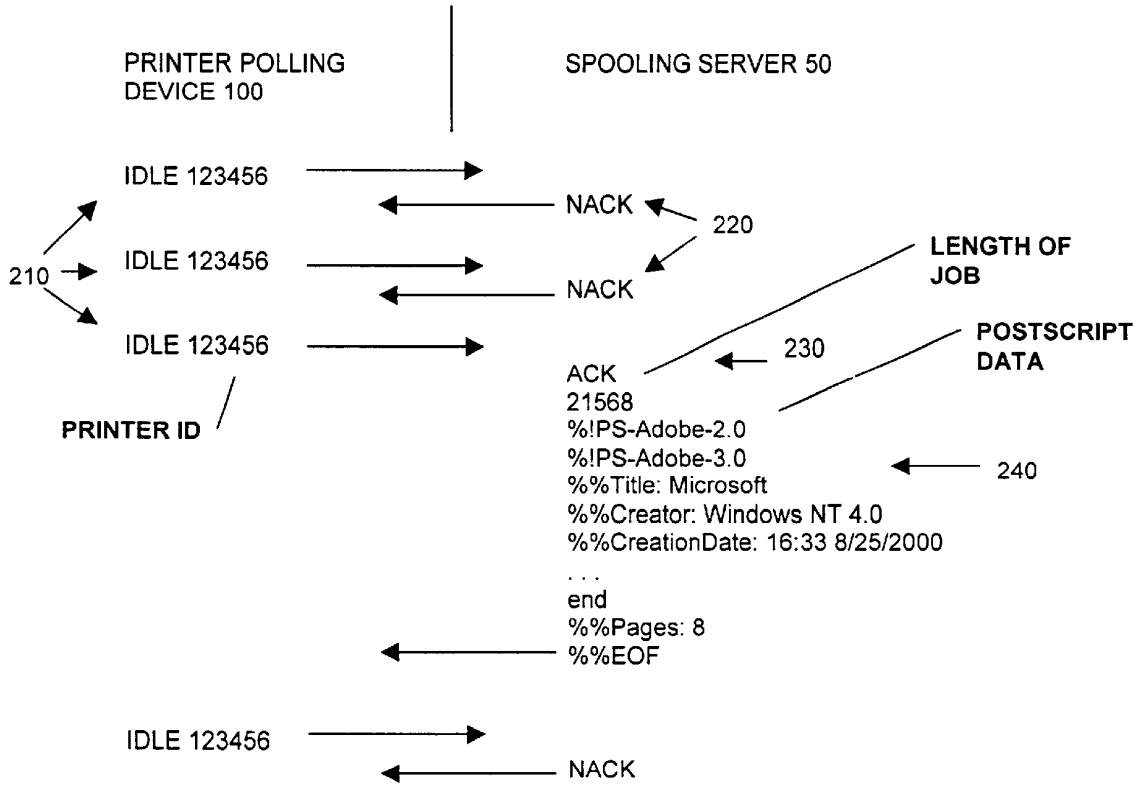


FIG. 6



Lexmark, Exhibit 1004
Lexmark v. Flexiworld

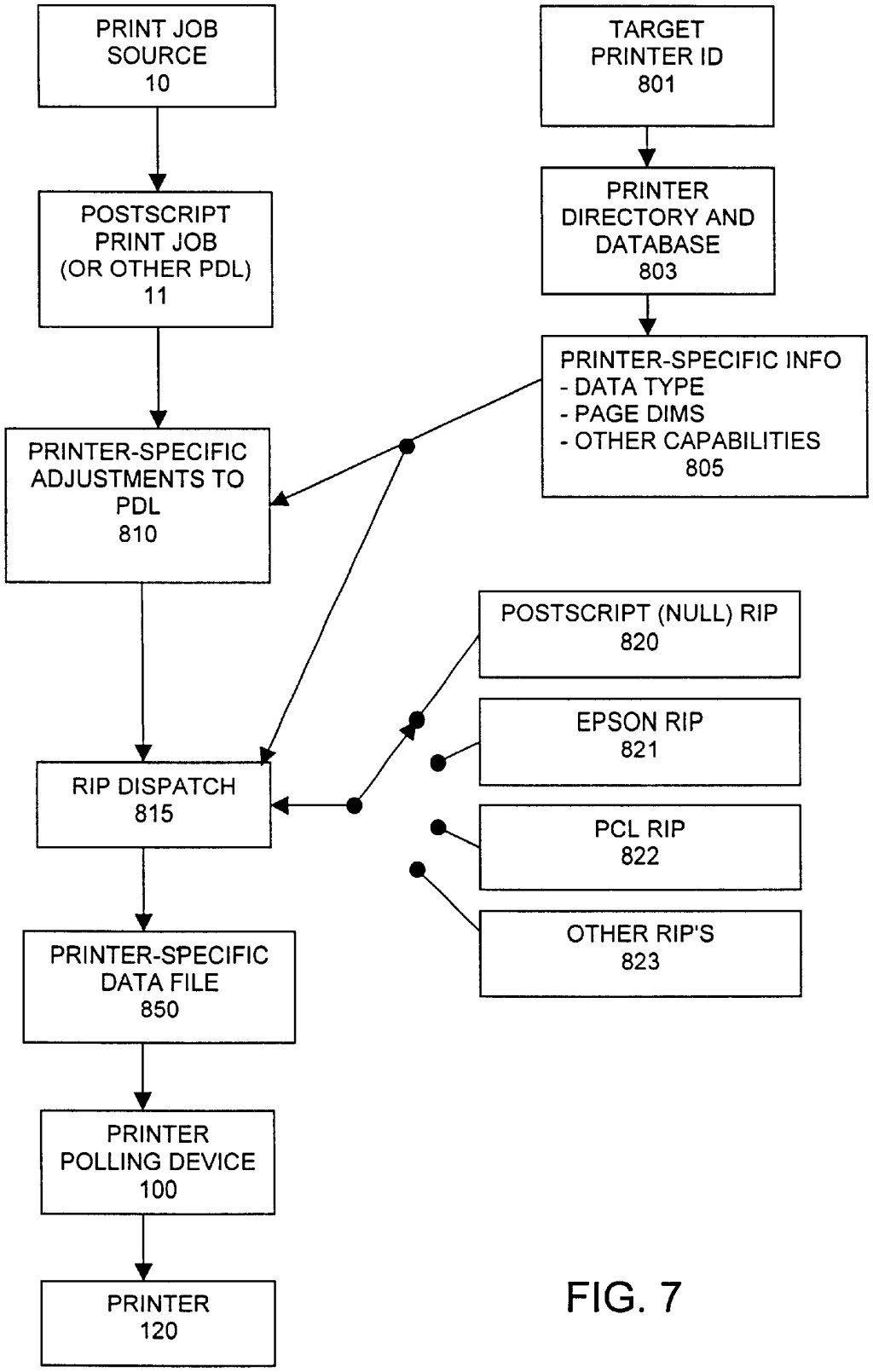


FIG. 7



Lexmark, Exhibit 1004
Lexmark v. Flexiworld

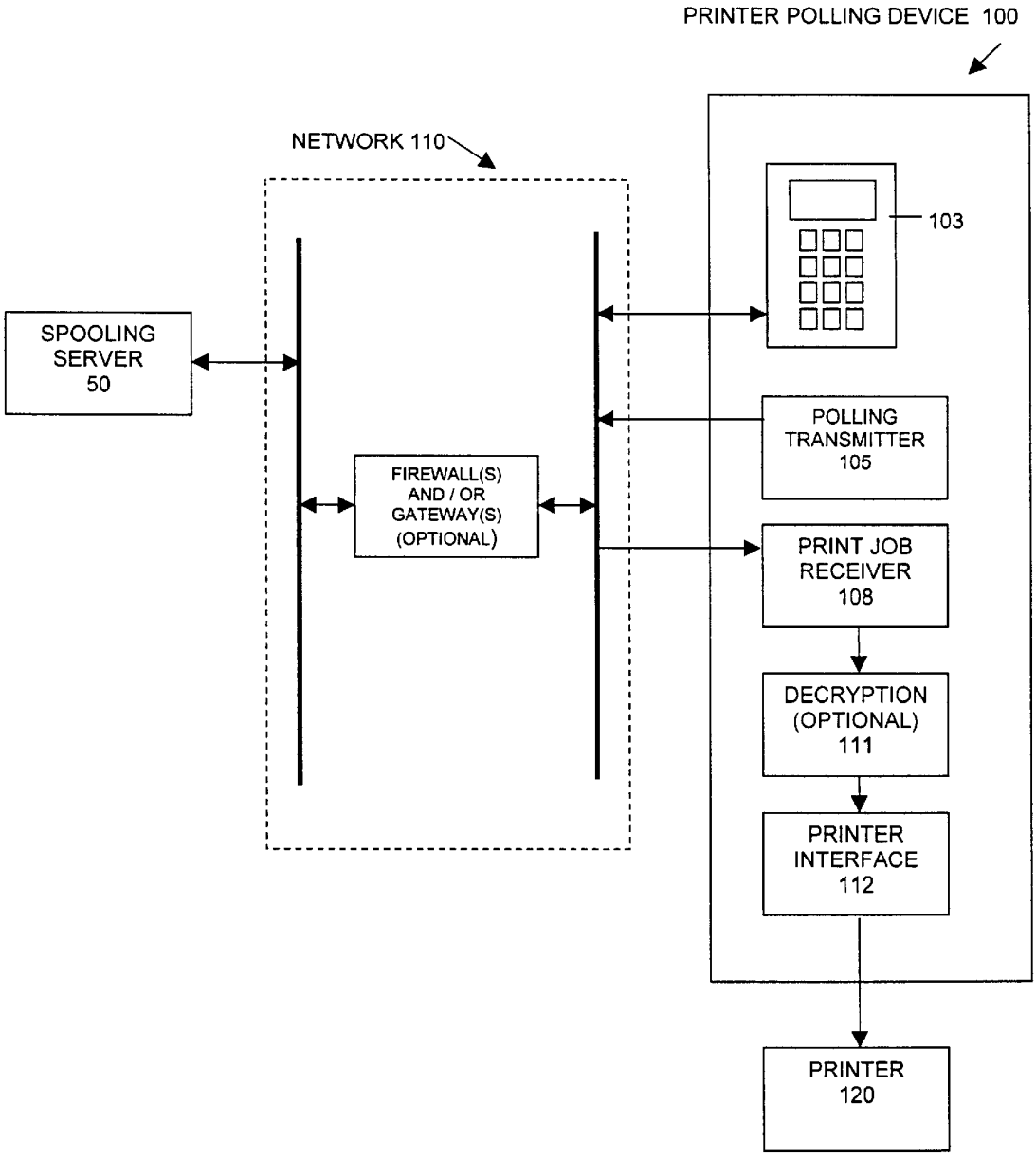


FIG. 8



Lexmark, Exhibit 1004
Lexmark v. Flexiworld

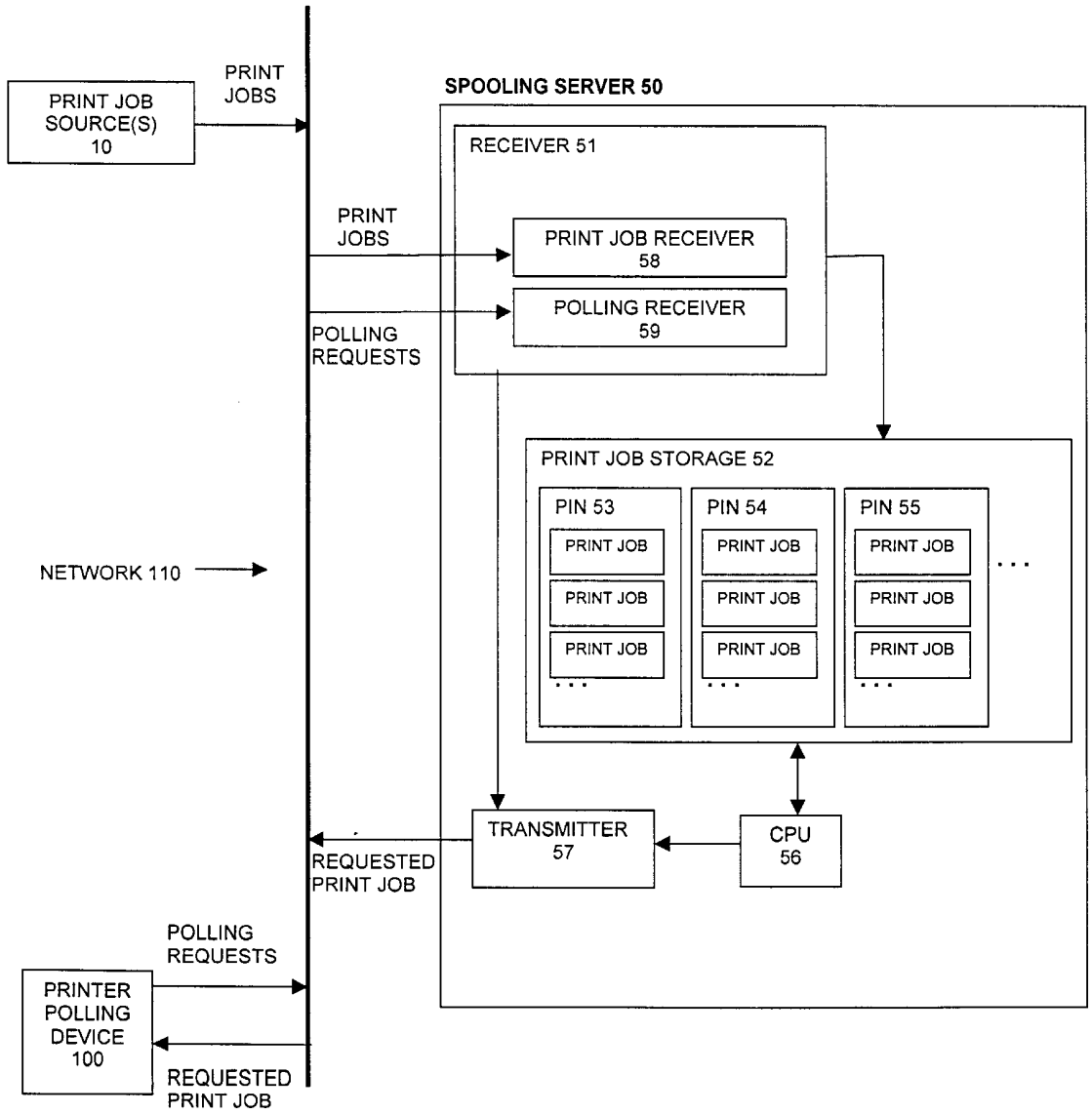


FIG. 9



Lexmark, Exhibit 1004
Lexmark v. Flexiworld

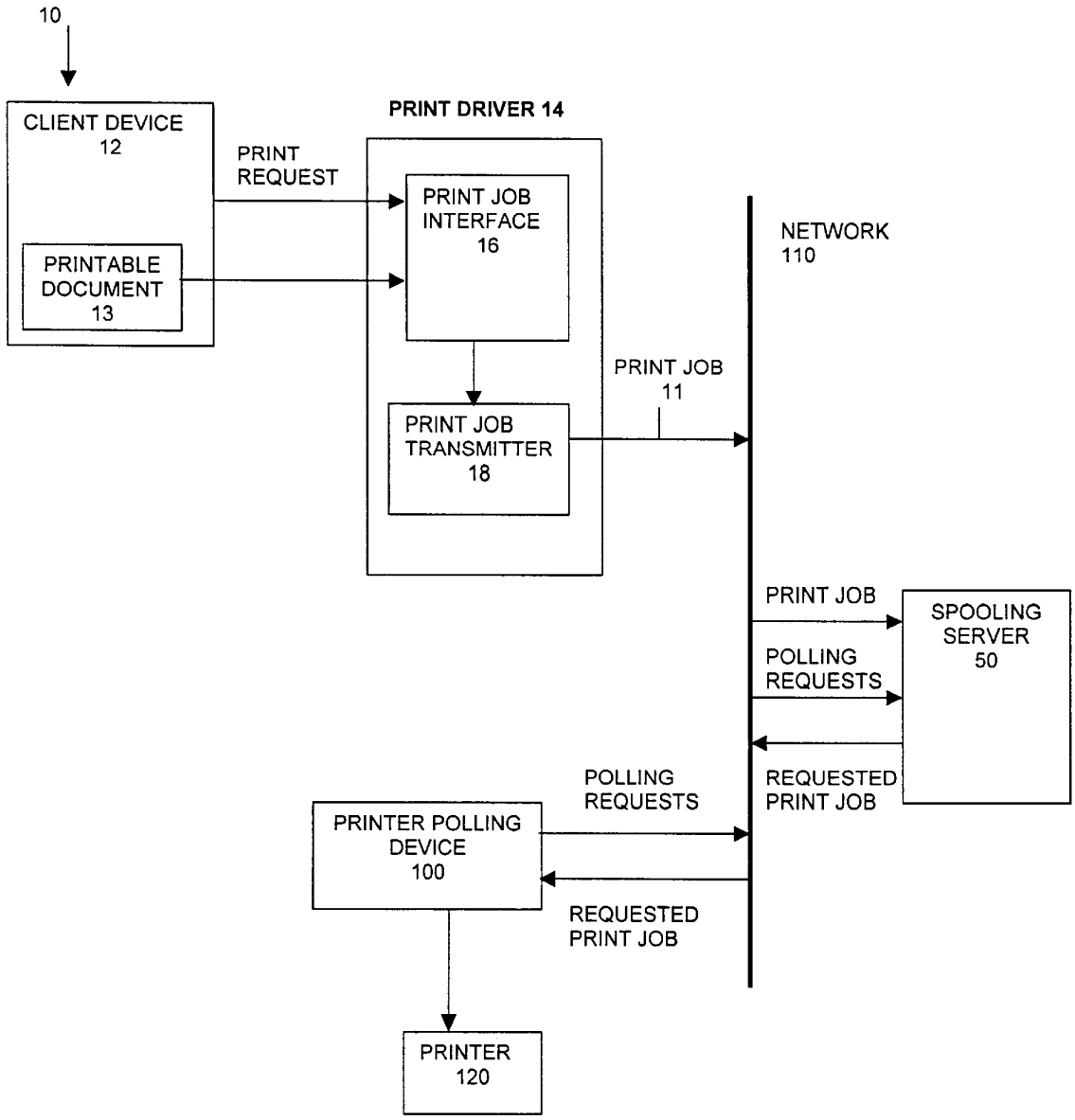


FIG.10



Lexmark, Exhibit 1004
Lexmark v. Flexiworld

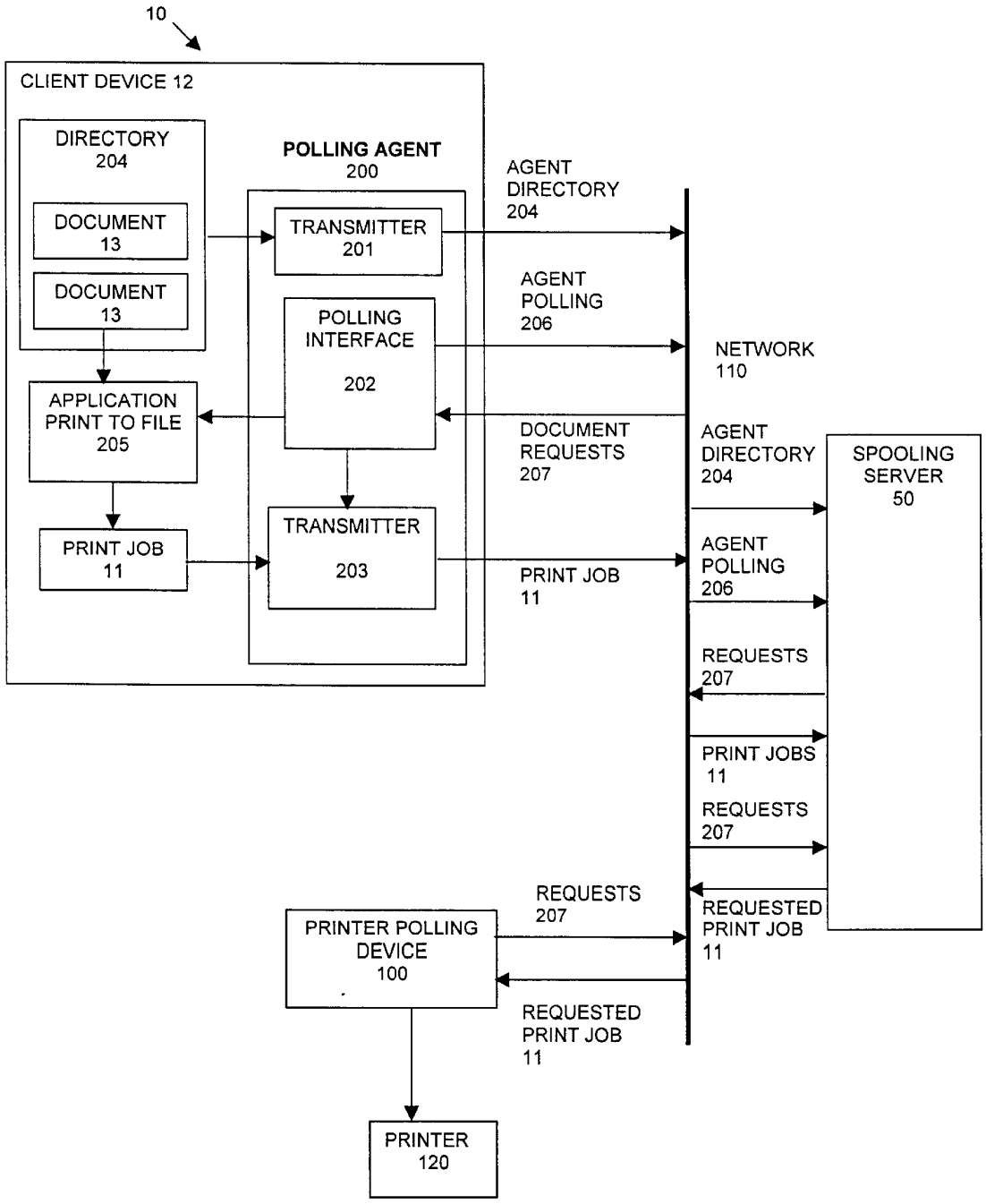


FIG.11



Lexmark, Exhibit 1004
Lexmark v. Flexiworld

# METHODS AND APPARATUS FOR REQUESTING AND RECEIVING A PRINT JOB VIA A PRINTER POLLING DEVICE ASSOCIATED WITH A PRINTER

## BACKGROUND OF THE INVENTION

The present invention relates to methods and apparatus for requesting and receiving print jobs over a communications network. In particular, the present invention enables a user to obtain print jobs at a location which may be unspecified, and which may be remote from the source of the print job. A spooling server is used to store a print job received via the network from a print job source. A printer polling device, which may be used at a location remote from the client device, is capable of polling the spooling server via the network to identify whether any print jobs associated with the printer polling device are available for printing at one or more printers associated with the polling device.

As computer networks become more complex, the rate at which network configurations change continues to increase. Also, the increasingly frantic pace of the typical business traveler who juggles documents on multiple computers and is required to configure a traveling laptop computer to integrate into various changing networks makes it increasingly difficult to reliably and efficiently print even a simple document.

For example, a business traveler in a hotel may wish to print to a printer that the hotel provides for such purposes. Under the current state of the art, the user must first obtain the network ID of the printer along with some information about the type of printer. Then, a print driver for that specific printer must be installed on the user's computer, and the computer must be configured to connect to the printer. This may additionally involve configuring the computer to connect to the host network.

Further, in many cases, it is desirable to be able to prepare a document for printing prior to having the information concerning the destination printer. For example, it may be desirable to print a document from a mobile laptop connected via a wireless data connection while in transit to a meeting at a site the user has never visited before. Obtaining the information and configuring the laptop to be able to print to the printer becomes logistically infeasible.

These problems have typically been solved in the past by one of the following methods:

1. The document is e-mailed or otherwise transferred over a network to a computer already configured to print to the desired printer;
2. A portable computer is connected directly to the printer via a cable or infra-red, bypassing many of the difficulties of configuring the computer to print to a network computer;
3. A portable printer is transported to the desired location; or
4. The document is faxed to a fax machine.

Printing methods relating to network and distributed printing are known in the prior art. Such systems require either a private network or foreknowledge of the destination of a print job. These prior art methods comprise what is typically referred to as "push" technology (i.e. technology in which a print job is directed to a specific known destination or printer).

In addition to the need for efficiency and ease of use is the need for security when sending, storing, or printing print



jobs. Early in the life of the Internet, the need for securing an organization's local network from tampering, stealing, or vandalism by outsiders became very obvious. A type of gateway called a firewall was developed to meet this need. The firewall is designed to be a single, well-controlled access point between the outside, global, or wide-area network and the inside, local-area network. By carefully restricting the types of network traffic and the destinations where that traffic can flow, the firewall can provide effective protection.

Specific "holes" in the firewall are created for each type of traffic that is allowed through the gateway in each direction. Most organizations, for example, allow e-mail traffic in and out from their e-mail server, as well as web page client access from inside the firewall to servers located outside of it.

Many types of access between machines commonly used on a local network are normally prevented from going through the firewall. Specifically, file sharing, remote log-in, printing, and various other network-administration types of protocols are typically not allowed to be transported outside the firewall.

Another aspect of the firewall is that it is almost always administratively controlled by a centralized authority for the organization that owns the local area network—commonly the management information services (MIS) department of a company. Normal users generally have to make special requests that are approved at the upper levels of management to get configuration changes in the firewall. In the interest of maintaining security, these changes are often limited to specific point-to-point exceptions or "holes" in the firewall.

It is desirable by many users to be able to print from a machine on one local area network to a printer located on a different local area network with the data being transferred over a global network (e.g., the Internet) outside of the firewall of both local networks. The current state of the art does have solutions for this problem. However, almost all of these solutions require the intervention of the firewall administrator. One example of a solution is the IPP—Internet Printing Protocol standard being promulgated by various vendors. This standard allows IPP-equipped printers to receive print jobs from remote clients over the Internet. However, the installation and use of IPP requires that a specific IPP hole be opened in the firewall by the network administrator.

It would be advantageous to be able to provide methods and apparatus that allow a user to print to a perhaps yet unknown destination printer or printer pool in a reliable, efficient and secure manner without the disadvantages of the above-mentioned techniques.

It would be further advantageous to provide a printing system based on "pull" technology (i.e. technology which enables a print job to be printed upon request, where the print file is only delivered in response to said request). Such technology would enable a system that allows a user to print to a destination printer or printer pool that may be located anywhere, in a reliable, efficient, and secure manner without the disadvantages of the above-mentioned techniques.

It would be further advantageous to have a solution that allows secure, efficient and easy-to-configure inter-network printing through a gateway firewall without the intervention of the network administrator.

The methods and apparatus of the present invention provide the foregoing and other advantages.

## SUMMARY OF THE INVENTION

The present invention relates to methods and apparatus for requesting and receiving print jobs over a communica-



Lexmark, Exhibit 1004
Lexmark v. Flexiworld

tions network. In particular, the present invention enables a user to obtain print jobs at a location which may be unspecified, and which may be remote from the source of the print job. A spooling server is used to store a print job received via the network from a print job source. A printer polling device, which may be used at a location remote from the source of the print job, is capable of polling the spooling server via the network to identify whether any print jobs associated with the printer polling device are available for printing at one or more printers associated with the polling device.

In an illustrative embodiment, a printer polling device is provided which is capable of requesting and receiving print jobs over a network. The printer polling device is capable of polling a spooling server over a network to identify a print job stored at the spooling server (e.g., via a transmitter). The identified print job is transmitted from the spooling server and received at the printer polling device (e.g., at a receiver).

The spooling server receives and stores said print job from a print job source via the network. The print job can originate from any suitable print job source, such as a client device with an associated print driver, a web browser, a facsimile machine, a scanner, a telephone, an Internet appliance, a personal digital assistant, or the like. A print job can also originate on the spooling server itself or be obtained from another server. The client device may be a computer, a telephone, a personal digital assistant, an Internet appliance, or the like.

The identified print job can be received at the printer polling device and printed at one or more printers coupled to the printer polling device. The printer polling device may periodically poll the spooling server to identify a print job associated with the printer polling device.

The network may comprise at least one of a local area network, a wide area network, a global network, the Internet, and any other type of network. The network may consist of multiple interconnected networks having multiple gateways and other features as is well known in the art.

In an alternate embodiment, the printer polling device may be located within a gateway firewall and the spooling server may be located outside the gateway firewall. The print job may be forwarded from the spooling server to the printer polling device such that reconfiguration of the gateway firewall is not required. For example, the print job may be forwarded to the spooling server as web-style traffic and received at the printer polling device as web-style traffic.

The print job source may be located at and in communication with a first local area network and the printer polling device may be located at and in communication with a second local area network. The spooling server may be located outside of the first and second local area networks. The print job source may communicate with the spooling server via a first gateway firewall which controls access to the first local area network and the printer polling device may communicate with the spooling server via a second gateway firewall which controls access to the second local area network.

The printer polling device may be: (i) a stand-alone device connected to one or more printers via a standard printer port, (ii) integrated into the firmware of a printer, (iii) integrated into the software of a network print server, or (iv) of any other suitable configuration.

The print job may be encrypted at the print job source and decrypted at the printer polling device.

The print job may comprise a document provided by a content provider. The content provider may be one of a newspaper, a magazine, a periodical, a document provider, a graphic arts provider, a notification service, an Internet content provider, a merchant, a financial institution, a government agency, a shipping company, or the like.

The print job may be provided by the content provider on a subscription basis. A single print job may be provided by the content provider for printing by multiple users.

The printer polling device may comprise a user interface, a connection to the network, and a connection to one or more printers.

In a further embodiment, each print job may be stored on the spooling server according to a personal identification number (PIN). The spooling server may communicate to the printer polling device a list of print jobs associated with the PIN which are stored at the spooling server. The selection of a print job from the list may be provided for (e.g., via a user interface).

A plurality of print jobs may be stored on the spooling server according to the PIN. The PIN may be provided to the spooling server via one of a user interface associated with the printer polling device, a telephone, a computer, an Internet appliance, a facsimile machine, a scanner, a personal digital assistant device, a dedicated terminal, or the like. The list of available print jobs may be displayed on one of a user interface associated with the printer polling device, a telephone, a computer, an Internet appliance, a facsimile machine, a scanner, a personal digital assistant device, a dedicated terminal, or the like. Selection of an available print job may be made via a user interface associated with the printer polling device, a telephone, a computer, an Internet appliance, a facsimile machine, a scanner, a,personal digital assistant device, a dedicated terminal, or the like.

The printer polling device may be a portable device. The printer polling device may be operably associated with a variety of printer types.

In a further embodiment, the print job may be provided to the spooling server without a pre-determined print destination. Alternatively, a desired print location for the print job may be designated at the print job source. The designated print location may be communicated to the spooling server with the print job. The print job may be printed at the desired print location when the printer polling device at the desired print location polls the spooling server and identifies the print job.

Further, a substantially specific time for printing a print job may be designated such that the print job is only available for printing from the spooling server at the designated substantially specific time.

In addition, a lifetime of the print job may be designated, wherein said print job will be stored on the spooling server only for the designated lifetime.

A number of printings of the print job may be designated, wherein the print job can only be printed the designated number of times.

A list of recipients authorized to retrieve a print job may be designated, wherein the print job may only be printed by the designated recipients.

The print job may be one of a negotiable instrument, a stamp, a coupon, a certificate, a check, a unit of currency, a token, a receipt, or the like.

The printer polling device may be connected to the network using DHCP protocol, or any other suitable network configuration protocol.

In a preferred embodiment, the printer polling device is capable of communicating printer status to the spooling



Lexmark, Exhibit 1004
Lexmark v. Flexiworld

server. The printer status may comprise at least one of a printer ready indication, an on-line indication, toner level information, paper supply information, error information, or other appropriate status information.

A printer operator can be notified when the printer status indicates that a printer requires attention. The operator can also be provided with vendor contact information to facilitate obtaining printer supplies or service. Automatic on-line ordering of printer supplies as required by printer status can be provided (e.g., by the spooling sever contacting predetermined preferred vendors).

The print job may include at least one of a document, a poster, an image, a coupon, a ticket, a certificate, a check, a list, a schedule, a periodical, a unit of currency, a negotiable instrument, postage, a bill of lading, a lottery or gaming ticket, a token, food stamps, a license, a permit, a pass, a passport, a ballot, a citation, identification, a copy-protection key, a proof-of-purchase, a warranty, a receipt, a transcript, a library card, or any other printable subject matter.

In an alternate embodiment, an agent program provides a directory of documents to the spooling server. The agent program enables a client device associated with the print job source to poll the spooling server to determine whether the spooling server requires a document identified in the directory to complete a print job. If so, the can be uploaded from the client device to the spooling server.

The directory can be communicated to the printer polling device and presented at the printer polling device. Selection of a print job from the directory can be made (e.g., via a user interface).

The directory may be presented via a visual presentation or an audio presentation. The client device may periodically poll the spooling server to determine whether the spooling server requires a document identified in the directory to complete a print job.

A communication device for providing status of the print job stored on the spooling server may be provided. The status of the print job may comprise at least one of filename, file size, author, creation date, print job lifetime, image, title, contents, personal identification number, recipient, job number, or reference number. The communication device may be a telephone, a computer, an Internet appliance, a personal digital assistant device, a dedicated terminal, or any other suitable wireless or wired communication device.

The printer polling device may be capable of polling multiple spooling servers.

The spooling server may be capable of communicating with other servers and receiving a print job from at least one of the other servers.

## BRIEF DESCRIPTION OF THE DRAWINGS

FIG. **1** is a block diagram of an implementation of the present invention;

FIG. **2** is a flow diagram showing an example of an encryption process which can be implemented in accordance with the invention;

FIG. **3** shows a representation of a printer polling device;

FIG. **4** is a block diagram of an alternate embodiment of the invention;

FIG. **5** is a flow diagram of an authentication procedure which can be implemented in accordance with the invention;

FIG. **6** shows an example of communications which take place between various components of the invention;

FIG. **7** is a flow chart illustrating an example print job reformatting routine;

FIG. **8** is a block diagram of an embodiment of a printer polling device;

FIG. **9** is a block diagram of an embodiment of a spooling server;

FIG. **10** is a block diagram of an embodiment of a print driver; and

FIG. **11** is a block diagram of an embodiment of an agent program.

## DETAILED DESCRIPTION OF THE INVENTION

The present invention enables print jobs to be requested and received from a spooling server. The print jobs are stored on the spooling server and subsequently delivered to one or more printers, on request, via a printer polling device. The printer polling device uses "pull" technology, which polls the spooling server so that the spooling server does not have to initiate a connection into a printer. In this manner print jobs can be securely printed anywhere, either automatically or at the request of a user who is authorized by the printer polling device and/or the spooling server. Since the spooling server need not initiate contact with any device, there is no potential breach of firewall security in a local network environment.

In one embodiment, a portable printer polling device is provided to enable retrieval and printing of documents from any location having Internet access and a printer. The spooling server functions as a repository that is accessible, e.g., via a global communication network such as the Internet, to authorized users at any time of day. Since the printer polling device polls the spooling server in order to obtain delivery of a print job, prior art push data flow techniques, which could compromise a local area network's security, are avoided. Moreover, compatibility with virtually all printers that may be connected to the network is provided, so that a document can be printed anywhere regardless of a specific printer's requirements. Many other advantages and features of the invention are set forth in the following description.

A preferred embodiment of the invention is shown in FIG. **1**. Printing services are provided via a spooling server **50** which is capable of receiving and storing one or more print jobs from a print job source **10** via a network **110**. A printer polling device **100** is provided which is capable of polling the spooling server **50** via the network **110** to identify a print job associated with the printer polling device **100**. Configuration problems are eliminated as each print job source **10** only needs to be configured to know how to print to the spooling server **50**. The spooling server **50** only needs to be configured to be able to print to the printer polling device **100**.

The print job can originate from any suitable print job source **10**. As shown in FIG. **1**, the print job source **10** may be a client device **12** associated with print driver **14**. The print driver **14** may receive the print job from an originating application **15**, which can be any program capable of producing a printable document. The print job source **10** may also be a web browser, a facsimile machine, a scanner, a telephone, an Internet appliance, a personal digital assistant, or the like. A print job can also originate on the spooling server **50** itself or be obtained from another server. The client device **12** may be a computer, a telephone, a personal digital assistant, an Internet appliance, a facsimile machine, a scanner, or the like.

The identified print job can be transmitted from the spooling server **50**, to the printer polling device **100** and



Lexmark, Exhibit 1004
Lexmark v. Flexiworld

printed at a printer **120** coupled to the printer polling device **100**. Printer **120** may be a single printer or a pool of one or more printers coupled via a print server.

The printer polling device **100** may periodically poll the spooling server **50** to identify a print job associated with the printer polling device **100**. Security is achieved by the fact that the printer **120** is not passively accepting any and all connections from the outside. The printer polling device **100** is initiating connections to a specific, trusted location, the spooling server **50**.

The network **110** may comprise at least one of a local area network, a wide area network, a global network, the Internet, and any other type of network. The network **110** may consist of multiple interconnected networks having multiple gateways and other features as is well known in the art.

In an alternate embodiment, the printer polling device **100** may be located within a gateway firewall **70** and the spooling server may be located outside the gateway firewall **70**. In addition, the print job source **10** may be located within a gateway firewall **30** and the spooling server may be located outside the gateway firewall **30**.

The print job may be forwarded to and from the spooling server **50** such that reconfiguration of gateway firewalls **30** and **70** is not required. For example, the print job may be forwarded to the spooling server **50** as web-style traffic and received at the printer polling device **100** as web-style traffic. For example, a print driver **14** may accept print requests from application **15** like any other print driver, but instead of routing the print requests onto the network **110** using normal printer packets and well-known-ports, it routes the output of the print job to the spooling server **50** located outside of the firewall **30** using packets and ports that resemble web traffic.

Similarly, using web types of packets and ports, the printer polling device **100** is capable of polling the spooling-server **50** and retrieving any print jobs that have been stored for the printer **120**.

As shown in FIG. **1**, the print job source **10** may be located at and in communication with a first local area network **20** and the printer polling device **100** may be located at and in communication with a second local area network **80**. The spooling server **50** may be located outside of the first and second local area networks **20**, **80**. The print job source **10** may communicate with the spooling server **50** via a first gateway firewall **30** which controls access to the first local area network **20** and the printer polling device **100** may communicate with the spooling server **50** via a second gateway firewall **70** which controls access to the second local area network **80**.

The printer polling device **100** may be: (i) a stand-alone device connected to the printer **120** via a standard printer port, (ii) integrated into the firmware of the printer **120**, (iii) integrated into the software of a network print server, or (iv) of any other suitable configuration. The printer polling function may also be integrated into the software on a stand-alone print server such as those manufactured by Electronics for Imaging, Inc. (Foster City, Calif.) under the trademarks Fiery® and EDOX®.

In a preferred embodiment, a fee may be charged to access the spooling server **50**. The fee can be based on one of print job size in bytes, print job size in number of pages, print job type, time for printing, time for storage, monthly fee, per use fee, lifetime membership, monthly membership, use of color, use of black and white, page size, location, convenience, number of images, print quality, image quality, or other suitable factors. The fee may be charged for providing a print job to the spooling server **50** and/or retrieving a print job from the spooling server **50**. The fee can be paid via a client device **12** associated with the print job source **10**, the printer polling device **100**, or any other suitable device capable of communicating with the spooling server, such as a smart card, a telephone, a personal digital assistant, or the like.

The spooling server **50** may store the one or more print job(s) in at least one spooling queue **52**. The spooling server **50** may be maintained by a trusted party on the outside of the firewalls **30**, **70**. Alternatively, the spooling server **50** may be owned and maintained by the organizations desiring to utilize inter-network printing.

Since the communications amongst the print job source **10**, the spooling server **50**, and the printer polling device **100** may travel across public networks, it is very desirable to protect any proprietary or confidential information that may be embodied in the print jobs.

In a preferred embodiment, the print job may be encrypted at the print job source **10** and decrypted at the printer polling device **100**. For example, the print job can be encrypted on the client device **12** such that it can only be printed by a person with the correct decryption key. In addition, printing of the document can be delayed until the key is physically entered at the printer polling device **100** (e.g., the recipient is physically present at the printer **120**).

A flow diagram of an example of an encryption process used between the print job source **10**, the spooling server **50** and the printer polling device **100** is shown in FIG. **2**. The print job **11** is protected by encrypting the print job (indicated at **501**) at the print job source **10** (e.g., on the print driver **14** or an agent program on the originating client device **12** of FIG. **1**) and decrypting it at the spooling server **50**. The encryption algorithm may be the IDEA algorithm. Other suitable encryption algorithms which can be utilized are DES (the Data Encryption Standard), or triple-DES (DES applied to the data three times with three different keys). Other encryption algorithms suitable for commercial confidential information are numerous and well known in the art of data encryption.

The key **500** used for encryption **501** may be derived from an account number **510**, a user's secret PIN (personal identification number) **520**, and/or optionally some additional encryption key digits **530** supplied by the user. Simply concatenating the bits together from these sources provides a moderately secure key **500**. Optionally, additional security may be achieved by using a more sophisticated hashing function.

The key **500** would be known only to the user and to the secure, trusted, spooling web server **50**. The encrypted print job is sent to the spooling server **50** where it is decrypted (**601**) to facilitate reformatting **602** for the destination printer once it is known. The reformatted print job data is re-encrypted **603** using the same or similar key **500'** derived in the same manner as key **500** at the print job source **10**. The encrypted print job is then transmitted from the spooling server **50** to the printer polling device **100**. Once at the printer polling device **100**, the print job is decrypted **701** using a key **500"** derived from the PIN **520**, account number **510**, and/or optional encryption key extension digits **530**. The decrypted print job can then be forwarded to the printer **120** for printing.

The print job **11** may comprise a document provided by a content provider. The content provider may be one of a newspaper, a magazine, a periodical, a document provider, a graphic arts provider, a notification service, an Internet



Lexmark, Exhibit 1004
Lexmark v. Flexiworld

content provider, a merchant, a financial institution, a government agency, a shipping company, or the like. For example, instead of physically delivering the daily sports page, it is simply printed on a customer's home printer.

The print job **11** may be provided by the content provider on a subscription basis. A single print job may be provided by the content provider for printing by multiple users.

The printer polling device **100** may comprise a user interface, a connection to the network **110**, and a connection to the printer **120**. FIG. **3** shows an embodiment of a user interface **103** for the printer polling device **100** having a display **101** and a keypad **102**. The keypad **102** shown in FIG. **3** may also comprise an alphanumeric keypad to allow for entry of both letters and numbers. The user interface may optionally include a speaker and a microphone for audio output and input, and may also include a card reader for reading a magnetic strip on a credit or debit card, automated teller machine (ATM) card, smartcard, prepaid print card, or the like.

In a further embodiment as shown in FIG. **4**, each print job may be stored on the spooling server **50** according to a personal identification number (PIN) **400**. As an example, FIG. **4** shows the PIN **400** entered at a client device **12**. The PIN **400** is forwarded to the spooling server **50** by the print driver **14** along with the print job. The spooling server **50** may communicate to the printer polling device **100** a list of print jobs associated with the PIN **400** which are stored at the spooling server **50**. The selection of a print job from the list may be provided for (e.g., via a user interface). For example, a small terminal may be provided at each printer polling device **100** to allow a user to interact with the spooling server **50** and request that the user's print jobs be sent to the printer **120** at the user's location. The user may identify himself or herself at the printer polling device **100** with their PIN **400**, and the spooling server **50** can then match that PIN **400** with print jobs previously submitted using that same PIN **400**.

A plurality of print jobs may be stored on the spooling server **50** according to the PIN **400** (e.g., in spooling queue **52**). For example, a directory may be created for each user, and thus each PIN, registered with the spooling server **50**. Each print job may additionally be assigned a unique job number at the time it is first received at the spooling server **50**. Thereafter, the job number may be used to access the data files associated with that job unambiguously. Once a print job has been selected to be printed to a destination printer **120**, the job number for the print job may be entered into a queue associated with the destination printer **120**. Data structures suitable for maintaining a queue are well known in the art. In the preferred embodiment, the queue **52** is maintained in a C++ class known as a CList provided by Microsoft in their C++ class library.

When the printer polling device **100** polls the spooling server **50**, the spooling server **50** checks to see if the queue for that printer **120** contains any print jobs. When the spooling server **50** finds a print job waiting to be printed, the data for that print job is retrieved from the file system, reformatted in a form suitable for the identified printer **120**, and transmitted to the printer polling device **100**.

The PIN **400** may be provided to the spooling server **50** via one of a user interface associated with the printer polling device **100**, a telephone, a computer, an Internet appliance, a facsimile machine, a scanner, a personal digital assistant device, a dedicated terminal, or the like. The list of available print jobs may be displayed on one of a user interface associated with the printer polling device **100**, a telephone, a computer, an Internet appliance, a facsimile machine, a scanner, a personal digital assistant device, a dedicated terminal, or the like. Selection of an available print job may be made via a user interface associated with the printer polling device **100**, a telephone, a computer, an Internet appliance, a facsimile machine, a scanner, a personal digital assistant device, a dedicated terminal, or the like.

FIG. **5** illustrates an exemplary process of authentication of a user using a PIN. When a user desires to access their account or documents over a non-secure channel, first, the spooling server **50** needs to verify that it is indeed talking to the actual user. The server generates a random string of bits **350**. These bits are sent to the printer polling device **100** where authentication is to take place. The user's PIN **150** is used to generate an encryption key **152** for encrypting the bits (indicated at **155**) and the result is returned to the spooling server **50**. The spooling server **50** decrypts the string (indicated at **355**) using an encryption key **362** generated from the PIN it knows (**360**) and compares it to the original random string (indicated at **365**). If the decrypted string **358** matches the original string **350**, the spooling server **50** accepts the user as authenticated. An account number (**361**, **151**) may optionally be used (either alone or in connection with the PIN) to generate the encryption keys **362**, **152**. Many other authentication protocols are well known in the art and may be substituted for the protocol described above in connection with FIG. **5**.

The printer polling device **100** may be a portable device. The printer polling device **100** may be operably associated with a variety of printer types.

In a further embodiment, the print job may be provided to the spooling server **50** without a pre-determined print destination. A user is able to interact with the printer polling device **100** and communicate the identification of the desired print destination for the user's print job to the spooling server **50**. The user need not know anything more about the printer **120** than its location (which the user needs anyway to be able to retrieve the physical output pages).

Alternatively, a desired print location for the print job may be designated at the print job source **10**. The designated print :location may be communicated to the spooling server **50** with the print job. The print job may be printed at the desired print location when the printer polling device **100** at the desired print location polls the spooling server **50** and identifies the print job.

Further, a substantially specific time for printing a print job may be designated such that the print job is only available for printing from the spooling server **50** at the designated substantially specific time.

In addition, a lifetime of the print job may be designated, wherein said print job will be stored on the spooling server **50** only for the designated lifetime.

A number of printings of the print job may be designated, wherein the print job can only be printed from the spooling server **50** the designated number of times.

A list of recipients authorized to retrieve a print job may be designated, wherein the print job may only be printed by the designated recipients. For example, a document or series of documents may be provided to the spooling server **50** which document or documents can be received by a designated group of recipients, such as a company's sales force, newsgroup or other content subscribers, or other target audiences.

The print job may be one of a negotiable instrument, a stamp, a coupon, a certificate, a check, a unit of currency, a token, a receipt, or the like. In such circumstances, it may be desirable that the designated number of printings is one.



Lexmark, Exhibit 1004
Lexmark v. Flexiworld

The print job source **10** may be connected to the network **110** using Dynamic Host Configuration Protocol (DHCP protocol), or any other suitable network configuration protocol. Similarly, the printer polling device **100** may be connected to the network **110** using DHCP protocol, or any other suitable network configuration protocol.

DHCP is a protocol which allows nodes to be added to a TCP/IP network dynamically without specific prior configuration of that node in the domain controller's hosts database. Each node desiring to connect announces itself to the DHCP server. The name of the node is sent to the DHCP server. The DHCP server then assigns the node a dynamic IP address as well as communicating the IP addresses of other key network services such as name servers, mailhosts, and gateways that are available. Once setup and enabled, this mechanism allows nodes to be added to the network without the intervention of a network administrator.

Ease of installation and configuration is therefore achieved through the use of DHCP by the fact that most local networks are configured to allow network devices to be added without the intervention of an administrator using DHCP. In addition, most local networks allow web access through their firewall (e.g., gateway firewalls **30** and **70**). These two factors allow both the print job source **10** and the printer polling device **100** to connect and communicate to the spooling server **50** without the intervention of a network administrator. The user simply plugs in the printer polling device **100** and it accesses the network and starts polling the spooling server **50**.

The invention may also be implemented using a virtual private network (VPN). A VPN is a mechanism that allows network nodes not directly connected to a local private network to behave as if they are locally connected to the network by forwarding the data packets through some type of public or intermediate network. For security, authentication of the node desiring to connect to the network is performed, as well as encryption of the contents of the forwarded packets. Various commercial products allow the setup and configuration of VPN's through various connectivity mechanisms such as dial-up ISP's, Cable Modems, and DSL on the client node end. The local network that is being connected to will require a router or router/firewall that implements the VPN protocol to allow the VPN connection. A VPN is made up of two components: L2TP (Layer 2 tunneling protocol) and IPSEC (Internet Protocol Security).

In a preferred embodiment, the printer polling device **100** is capable of communicating the status of the printer **120** to the spooling server **50**. The printer status may comprise at least one of a printer ready indication, an on-line indication, toner level information, paper supply information, error information, or other appropriate status information.

A printer operator can be notified when the printer status indicates that the printer **120** requires attention. The operator can also be provided with vendor contact information to facilitate obtaining printer supplies or service. Automatic on-line ordering of printer supplies as required by printer status can be provided (e.g., by the spooling sever **50** contacting predetermined preferred vendors).

The print job may include at least one of a document, a poster, an image, a coupon, a ticket, a certificate, a check, a list, a schedule, a periodical, a unit of currency, a negotiable instrument, postage, a bill of lading, a lottery or gaming ticket, a token, food stamps, a license, a permit, a pass, a passport, a ballot, a citation, identification, a copy-protection key, a proof-of-purchase, a warranty, a receipt, a transcript, a library card, or any other printable subject matter.

As illustrated in FIG. **6**, the printer polling device **100** may periodically poll the spooling server **50**. The interval of the polling can vary as desired and can be adjusted dynamically based upon such factors as traffic or requests for files. The polling request (query) **210** is preferably encrypted. Because the query **210** is directed to a specific spooling server **50**, it is difficult for a third party to breach the system's security. The query **210** asks the spooling server **50** if it has a print job identified by the user (e.g., via a PIN or a job number). Once the spooling server **50** has received a request **210** from the printer polling device **100** for a print job that is stored at the spooling server **50**, the spooling server **50** waits for the next query **210** from the printer polling device **100**. Then, instead of its normal answer to the query of "NACK" (negative acknowledge) **220**, the spooling server **50** answers "ACK" (acknowledge) **230** and transmits the print job to the destination printer **120**.

In an alternate embodiment as shown in FIG. **11**, an agent program **200** provides a directory of documents **204** to the spooling server **50**. The agent program **200** enables a client device **12** associated with the print job source **10** to poll the spooling server **50** to determine whether the spooling server **50** requires a document **13** identified in the directory **204** to complete a print job. If so, the document **13** can be uploaded from the client device **12** to the spooling server **50**. The agent **200** enables a user at a printer **120** (or using any of the available interfaces to the spooling server **50**) to initiate the printing of documents **13** that still reside on a client device **12** (such as the user's computer) even though the documents **13** have not been forwarded to the spooling server **50** as print jobs.

The agent program **200** may be downloaded and installed on the client device **12**. The agent program **200** may be configured to make the contents of some or all of the directories **204** on the client device **12** available to the spooling server **50**. Once installed and running, the agent program **200** initiates a connection to the spooling server **50** in the same way the printer polling device **100** does. The agent program may have a connection through a firewall, for example.

The directory of documents **204** may include application files such as a Microsoft Word .doc file, for example, or files that have been made into a print job (Postscript or PDF file) by printing "to a file" from some application.

The directory **204** can be communicated to the printer polling device **100** and presented at the printer polling device **100**. Selection of a print job **11** from the directory can be made (e.g., via a user interface).

For example, the spooling server **50** will list those documents **13** being available from the agent program **200** whenever the user of that account is interacting with the printer polling device **100**, or any other interface provided for communication to the spooling server **50** as described herein.

For example, the agent program **200** may periodically poll the spooling server **50** via polling interface **202**. The interval of the polling can vary as desired and can be adjusted dynamically based upon such factors as traffic or requests for files. The communications between the agent program **200** and the spooling server **50** occur substantially as described in connection with FIG. **6** above. The polling request (query) **206** is preferably encrypted. Because the query **206** is directed to a specific spooling server **50**, it is difficult for a third party to breach the system's security. The query **206** asks the spooling server **50** if it wants any files in the directory **204** (and may also update the directory **204**). Once



Lexmark, Exhibit 1004
Lexmark v. Flexiworld

the spooling server **50** has received a request **207** from the printer polling device **100** for a document that is listed in the directory **204**, the spooling server **50** waits for the next query **206** from the agent program **200**. Then, instead of its normal answer to the query of "NACK" (negative acknowledge), it answers "ACK" (acknowledge) followed by document information, such as the name of the document that is requested by request **207**.

The agent program **200**, upon receiving an "ACK" and the request information **207**, opens the document **13** using the application it was created in and prints it to a temporary file **205** to create a print job **11**. This print job **11** is then transmitted to the spooling server **50** via transmitter **203**. The spooling server **50** uses its normal mechanism to then transmit the print job **11** to the destination printer **120**.

Alternatively, the spooling server **50** may send an "ACK" followed by the name of a subdirectory. In that case, the agent program **200** returns the contents of that subdirectory. The spooling server **50** can then display those files to the user at the printer polling device **100** and allow one of the files to be selected, or allow additional navigation of directory **204** to take place.

The directory **204** may be presented via a visual presentation or an audio presentation. The client device **12** may periodically poll the spooling server **50** to determine whether the spooling server **50** requires a document from the directory **204** to complete a print job.

Communications with the spooling server **50** may be enabled via at least one of a telephone, a personal digital assistant device, a computer, an Internet appliance,sa web browser, a dedicated terminal, or the like. The communications with the spooling server **50** may be via an audio interface or a visual interface.

A communication device for providing status of the print job stored on the spooling server **50** may be provided. The status of the print job may comprise at least one of filename, file size, author, creation date, print job lifetime, image, title, contents, personal identification number, recipient, job number, or reference number. The communication device may be a telephone, a computer, an Internet appliance, a personal digital assistant device, a dedicated terminal, or any other suitable wireless or wired communication device.

The print job source **10** may be one of a computer, a personal digital assistant device, an Internet appliance, a telephone, a facsimile machine, a scanner, a dedicated terminal, or other suitable source.

The printer polling device **100** may be capable of polling multiple spooling servers.

The spooling server **50** may be capable of communicating with other servers and receiving a print job from at least one of the other servers.

The print jobs submitted from the print job source **10** to the spooling server **50** may be generated in a page description language known as Postscript. Alternate choices for a page description language are PDF, Latex, or other similar languages. The size of the paper, various printer capabilities, and printable area dimensions may be assumed from a lowest common denominator set of capabilities common to most of the intended target printers.

Once the destination printer **120** is known, the page description language data needs to be converted into a form that can be understood by that printer **120**. This process is shown in FIG. **7**. Once the print job **11** is sent to the spooling server **50**, a target printer **120** must be identified before the spooling server **50** can forward the print job **11** to be printed. Target printer identification **801** can be provided with the print job **11** from the print job source **10** or can be provided by the printer polling device **100** as part of the polling query. The spooling server **50** retrieves printer specific information **805** for the target printer **120** from a printer database **803**. Based on the printer specific information **805** (such as data type, page dimensions, color capabilities, margins, and other print characteristics) the spooling server **50** will make printer specific adjustments **810** to the print job **11** at the page description language level prior to rasterization.

On printers that can accept Postscript (or the PDL of choice) directly, no modification is necessary. For other, simpler printers, a lower level bitmap form of the page is required to be sent to the printer. In this case, the page description language needs to be rasterized into a bitmap form. In addition, the bitmap data needs to be formatted into the form understood by the printer **120**. A raster image processor **815** determines the target printer type from the printer specific information **805** and selects an appropriate data format from available formats **820**, **821**, **822**, **823**. The raster image processor **815** places the print job **11** into a printer specific data file **850** for delivery to the printer polling device **100** to be printed at the target printer **120**.

One common example of a data format used with simple printers is PCL (Printer Control Language), which is widely used in printers built by Hewlett Packard. Other printers built by Epson, for example use Epson's proprietary Epson-escape code sequences to format the bitmap data.

Alternatively, reformatting of the print job may take place at the printer **120**, at the printer polling device **100**, or at any other suitable device.

FIG. **8** shows the components of an embodiment of a printer polling device **100**. As discussed above in connection with FIG. **3**, the printer polling device may optionally include a user interface **103** for enabling communications with the spooling server **50** (e.g., providing a PIN to the spooling server **50**). A polling transmitter **105** is provided for transmitting polling requests to the spooling server **50** via the network **110** to identify a print job stored at the spooling server **50** (as discussed in connection with FIGS. **1** and **4** above). A print job receiver **108** is provided for receiving the identified print job from the spooling server **50** via the network **110**. Decryption **111** of an encrypted print job may optionally be provided for at the printer polling device **100**. A printer interface **112** enables the printer polling device **100** to forward the print job to a printer **120** for printing.

FIG. **9** shows the components of an embodiment of a spooling server **50**. A receiver **51** is provided which is capable of receiving print jobs from the print job source **10** and receiving polling requests from the printer polling device **100**. The receiver **51** may comprise a print job receiver **58** for receiving the print job and a polling receiver **59** for receiving the polling request. When a print job is received by the receiver **51**, the spooling server **50** stores the print job in memory **52**, which may comprise random access memory (RAM), magnetic or optical storage media, or any other read/write memory device. As discussed herein, the print jobs may be stored in memory **52** according to a PIN. Multiple print jobs may be stored under each PIN as shown at **53**, **54**, and **55**. When the spooling server **50** receives a polling-request for a specific print job from the printer polling device **100** at the receiver **51**, the spooling server **50** will determine whether the requested print job is stored in memory **52**, and if so, forward the requested print job to the printer polling device **100** via transmitter **57**. A processor **56** enables the spooling server to search for, retrieve, and/or reformat the print job for delivery to the printer polling device **100**.



Lexmark, Exhibit 1004
Lexmark v. Flexiworld

FIG. **10** shows the components of an embodiment of a print driver **14**. An interface **16** is provided for receiving a print job from a print job source **10**. The print job source **10** is shown in FIG. **10** as a client device **12**, but can be any suitable print job source as discussed herein. The interface **16** receives a printable document **13** from the client device **12**. A transmitter **18** is provided for transmitting the print job **11** to the spooling server **50** via the network **110**. The spooling server **50** receives polling requests from the printer polling device **100** and forwards one or more identified print jobs to the printer polling device **100** in response to the polling requests. The print jobs can then be printed at a printer **120** associated with the printer polling device **100**. As discussed in greater detail elsewhere herein, the printer polling device **100** does not have to identify specific print jobs to the spooling server **50**. Instead, it can simply request a list of all print jobs (if any) currently stored at the spooling server **50** for that specific printer polling device **100**, or for a particular PIN number (or other identifier) entered via the printer polling device **100** or other device. As discussed elsewhere herein, the list of print jobs may be accessed via various other devices capable of communicating with the spooling server **50**.

It will now be appreciated that the present invention provides improved methods and apparatus for requesting and receiving print jobs over a communications network in a secure manner without the need to specify the print destination. By using a printer polling device, the disadvantages of prior art push data flow techniques are overcome. Instead of having a server initiate contact with a print station behind a firewall, the present invention provides a printer polling device that polls a spooling server to determine if there are any documents to be printed by a printer associated with the printer polling device. Compatibility with all types of printers is also provided.

Although the invention has been described in connection with preferred embodiments thereof, those skilled in the art will appreciate that numerous adaptations and modifications may be made thereto without departing from the spirit and scope of the invention, as set forth in the following claims.

What is claimed is:

**1**. A method for requesting and receiving a print job, comprising:

periodically forwarding a polling request to a spooling server over a network via a printer polling device associated with a printer to identify a print job stored at the spooling server; and

receiving an identified print job from the spooling server at the printer polling device in response to said polling request.

**2**. A method in accordance with claim **1**, wherein said spooling server receives and stores said print job from a print job source via the network.

**3**. A method in accordance with claim **1**, further comprising printing said identified print job at said printer.

**4**. A method in accordance with claim **1**, further comprising:

enabling adjustment of an interval of said periodic polling.

**5**. A method in accordance with claim **1**, wherein the network comprises:

at least one of a local area network, a wide area network, a global network, and the Internet.

**6**. A method in accordance with claim **1**, wherein:

said printer polling device is located within a gateway firewall; and

said spooling server is located outside said gateway firewall.

**7**. A method in accordance with claim **6**, wherein:

the print job is forwarded to the spooling server as web-style traffic and received at the printer polling device as web-style traffic.

**8**. A method in accordance with claim **1**, wherein the print job is forwarded by the spooling server to the printer polling device such that reconfiguration of the gateway firewall is not required.

**9**. A method in accordance with claim **1**, wherein:

a print job source is located at and in communication with a first local area network and forwards the print job to the spooling server;

the printer polling device is located at and in communication with a second local area network; and

the spooling server is located outside of the first and second local area networks.

**10**. A method in accordance with claim **9**, wherein:

the print job source communicates with the spooling server via a first gateway firewall which controls access to the first local area network; and

the printer polling device communicates with the spooling server via a second gateway firewall which controls access to the second local area network.

**11**. A method in accordance with claim **1**, wherein the printer polling device is one of (i) a stand-alone device connected to the printer via a standard printer port, (ii) integrated into the firmware of the printer, or (iii) integrated into the software of a network print server.

**12**. A method in accordance with claim **1**, further comprising:

providing for encryption of the print job at a print job source; and

providing for decryption of the print job at the printer polling device.

**13**. A method in accordance with claim **1**, wherein the print job comprises a document provided by a content provider.

**14**. A method in accordance with claim **13**, wherein said content provider is one of a newspaper, a magazine, a periodical, a document provider, a graphic arts provider, a notification service, an Internet content provider, a merchant, a financial institution, a government agency, or a shipping company.

**15**. A method in accordance with claim **13**, wherein the print job is provided by the content provider on a subscription basis.

**16**. A method in accordance with claim **1**, wherein the printer polling device comprises:

user interface;

a connection to the network; and

a connection to the printer.

**17**. A method in accordance with claim **1**, further comprising:

storing each print job on the spooling server according to a personal identification number (PIN).

**18**. A method in accordance with claim **17**, further comprising:

communicating from said spooling server to said printer polling device a list of print jobs associated with the PIN which are stored at the spooling server; and

providing for the selection of a print job.

**19**. A method in accordance with claim **17**, wherein:

a plurality of print jobs are stored on the spooling server according to the PIN.



Lexmark, Exhibit 1004
Lexmark v. Flexiworld

20. A method in accordance with claim 17, wherein:

the PIN is provided to the spooling server via one of a user interface associated with the printer polling device, a telephone, a computer, an Internet appliance, a facsimile machine, a scanner, a personal digital assistant device, or a dedicated terminal;

the list of available print jobs is displayed on one of a user interface associated with the printer polling device, a telephone, a computer, an Internet appliance, a facsimile machine, a scanner, a personal digital assistant device, or a dedicated terminal; and

selection of an available print job is made via a user interface associated with the printer polling device, a telephone, a computer, an Internet appliance, a facsimile machine, a scanner, a personal digital assistant device, or a dedicated terminal.

21. A method in accordance with claim 1, wherein the printer polling device is a portable device.

22. A method in accordance with claim 1, wherein the printer polling device may be operably associated with a variety of printer types.

23. A method in accordance with claim 1, wherein the print job is provided to the spooling server without a pre-determined print destination.

24. A method in accordance with claim 1, further comprising:

providing for designation of a desired print location for the print job at the print job source;

providing for communication of the desired print location to the spooling server; and

printing the print job at the desired print location when the printer polling device at the desired print location polls the spooling server and identifies the print job.

25. A method in accordance with claim 1, further comprising:

providing for designation of a substantially specific time for printing a print job; and

making said print job available for printing from the spooling server only at the designated substantially specific time.

26. A method in accordance with claim 1, further comprising:

providing for a designated lifetime of the print job, wherein said print job will be stored only for the designated lifetime.

27. A method in accordance with claim 1, further comprising:

providing for a designated number of printings of said print job, wherein said print job can only be printed the designated number of times.

28. A method in accordance with claim 27, wherein:

the print job is one of a negotiable instrument, a stamp, a coupon, a certificate, a check, a unit of currency, a token, or a receipt.

29. A method in accordance with claim 1, further comprising:

providing for the designation of one or more recipients of said print job, wherein the print job can only be printed by the designated one or more recipients.

30. A method in accordance with claim 1, wherein the printer polling device is connected to the network using DHCP protocol.

31. A method in accordance with claim 1, wherein the printer polling device communicates printer status to the spooling server.

32. A method in accordance with claim 31, wherein the printer status comprises at least one of a printer ready indication, an on-line indication, toner level information, paper supply information, or error information.

33. A method in accordance with claim 31, further comprising:

notifying a printer operator when said printer status indicates that the printer requires attention.

34. A method in accordance with claim 33, further comprising:

providing the operator with vendor contact information to facilitate obtaining printer supplies or service.

35. A method in accordance with claim 31, further comprising:

providing for automatic on-line ordering of printer supplies as required by printer status.

36. A method in accordance with claim 1, wherein the print job comprises at least one of a document, a poster, an image, a coupon, a ticket, a certificate, a check, a list, a schedule, a periodical, a unit of currency, a negotiable instrument, postage, a bill of lading, a lottery or gaming ticket, a token, food stamps, a license, a permit, a pass, a passport, a ballot, a citation, identification, a copy-protection key, a proof-of-purchase, a warranty, a receipt, a transcript, or a library card.

37. A method in accordance with claim 1, further comprising:

providing an agent program that provides a directory of documents to the spooling server, said agent program enabling a client device associated with the print job source to poll the spooling server to determine whether the spooling server requires a document from the directory to complete a print job; and

uploading the document from the client device to the spooling server.

38. A method in accordance with claim 37, further comprising:

communicating the directory to the printer polling device;

presenting the directory at the printer polling device; and

providing for selection of a print job from the directory.

39. A method in accordance with claim 38, wherein presenting said directory comprises one of a visual presentation or an audio presentation.

40. A method in accordance with claim 1, further comprising providing a communication device for providing status of the print job stored on the spooling server.

41. A method in accordance with claim 40, wherein the status of the print job comprises at least one of filename, file size, author, creation date, image, print job lifetime, title, contents, personal identification number, recipient, job number, or reference number.

42. A method in accordance with claim 40, wherein the communication device comprises one of a telephone, a computer, an Internet appliance, a personal digital assistant device, or a dedicated terminal.

43. A method in accordance with claim 1, wherein said printer polling device is capable of polling multiple spooling servers.

44. A method in accordance with claim 1, further comprising:

providing for the communication between said spooling server and other servers; and

receiving a print job from at least one of the other servers at the spooling server.

45. A printer polling device associated with a printer for requesting and receiving a print job, comprising:



Lexmark, Exhibit 1004
Lexmark v. Flexiworld

a transmitter for periodically forwarding a polling request to a spooling server over a network to identify a print job stored at the spooling server; and

a receiver for receiving an identified print job from the spooling server at the printer polling device in response to said polling request.

**46**. A printer polling device in accordance with claim **45**, wherein said spooling server receives and stores said print job from a print job source via the network.

**47**. A printer polling device in accordance with claim **45**, wherein said identified print job is printed at said printer.

**48**. A printer polling device in accordance with claim **45**, wherein an interval of said periodic polling request is adjustable.

**49**. A printer polling device in accordance with claim **45**, wherein the network comprises:

at least one of a local area network, a wide area network, a global network, and the Internet.

**50**. A printer polling device in accordance with claim **45**, wherein:

said printer polling device is located within a gateway firewall; and

said spooling server is located outside said gateway firewall.

**51**. A printer polling device in accordance with claim **50**, wherein:

the print job is forwarded to the spooling server as web-style traffic and received at the printer polling device as web-style traffic.

**52**. A printer polling device in accordance with claim **45**, wherein the print job is forwarded by the spooling server to the printer polling device such that reconfiguration of the gateway firewall is not required.

**53**. A printer polling device in accordance with claim **45**, wherein:

a print job source is located at and in communication with a first local area network and forwards the print job to the spooling server;

the printer polling device is located at and in communication with a second local area network; and

the spooling server is located outside of the first and second local area networks.

**54**. A printer polling device in accordance with claim **53**, wherein:

the print job source communicates with the spooling server via a first gateway firewall which controls access to the first local area network; and

the printer polling device communicates with the spooling server via a second gateway firewall which controls access to the second local area network.

**55**. A printer polling device in accordance with claim **45**, wherein the printer polling device is one of (i) a stand-alone device connected to the printer via a standard printer port, (ii) integrated into the firmware of the printer, or (iii) integrated into the software of a network print server.

**56**. A printer polling device in accordance with claim **45**, wherein:

the print job is encrypted at a print job source; and

the print job is decrypted at the printer polling device.

**57**. A printer polling device in accordance with claim **45**, wherein the print job comprises a document provided by a content provider.

**58**. A printer polling device in accordance with claim **57**, wherein said content provider is one of a newspaper, a magazine, a periodical, a document provider, a graphic arts provider, a notification service, an Internet content provider, a merchant, a financial institution, a government agency or a shipping company.

**59**. A printer polling device in accordance with claim **57**, wherein the print job is provided by the content provider on a subscription basis.

**60**. A printer polling device in accordance with claim **45**, further comprising:

user interface;

a connection to the network; and

a connection to the printer.

**61**. A printer polling device in accordance with claim **45**, wherein:

each print job is stored on the spooling server according to a personal identification number (PIN).

**62**. A printer polling device in accordance with claim **61**, wherein:

said spooling server communicates to said printer polling device a list of print jobs associated with the PIN which are stored at the spooling server; and

the selection of a print job is provided for.

**63**. A printer polling device in accordance with claim **61**, wherein:

a plurality of print jobs are stored on the spooling server according to the PIN.

**64**. A printer polling device in accordance with claim **61**, wherein:

the PIN As provided to the spooling server via one of a user interface associated with the printer polling device, a telephone, a computer, an Internet appliance, a facsimile machine, a scanner, a personal digital assistant device, or a dedicated terminal;

the list of available print jobs is displayed on one of a user interface associated with the printer polling device, a telephone, a computer, an Internet appliance, a facsimile machine, a scanner, a personal digital assistant device, or a dedicated terminal; and

selection of an available print job is made via a user interface associated with the printer polling device, a telephone, a computer, an Internet appliance, a facsimile machine, a scanner, a personal digital assistant device, or a dedicated terminal.

**65**. A printer polling device in accordance with claim **45**, wherein the printer polling device is a portable device.

**66**. A printer polling device in accordance with claim **45**, wherein the printer polling device may be operably associated with a variety of printer types.

**67**. A printer polling device in accordance with claim **45**, wherein the print job is provided to the spooling server without a pre-determined print destination.

**68**. A printer polling device in accordance with claim **45**, wherein:

a desired print location for the print job is designated at the print job source;

the desired print location is communicated to the spooling server; and

the print job is printed at the desired print location when the printer polling device at the desired print location polls the spooling server and identifies the print job.

**69**. A printer polling device in accordance with claim **45**, wherein:

a substantially specific time for printing a print job is designated; and

said print job is made available for printing from the spooling server only at the designated substantially specific time.



Lexmark, Exhibit 1004
Lexmark v. Flexiworld

**70**. A printer polling device in accordance with claim **45**, wherein:

a lifetime of the print job is designated, wherein said print job will be stored only for the designated lifetime.

**71**. A printer polling device in accordance with claim **45**, wherein:

a number of printings of said print job is designated, wherein said print job can only be printed the designated number of times.

**72**. A printer polling device in accordance with claim **71**, wherein:

the print job is one of a negotiable instrument, a stamp, a coupon, a certificate, a check, a unit of currency, a token, or a receipt.

**73**. A system in accordance with claim **45**, wherein:

one or more recipients of said print job are designated, wherein the print job can only be printed by the designated one or more recipients.

**74**. A printer polling device in accordance with claim **45**, wherein the printer polling device is connected to the network using DHCP protocol.

**75**. A printer polling device in accordance with claim **45**, wherein the printer polling device communicates printer status to the spooling server.

**76**. A printer polling device in accordance with claim **75**, wherein the printer status comprises at least one of a printer ready indication, an on-line indication, toner level information, paper supply information, or error information.

**77**. A printer polling device in accordance with claim **75**, wherein:

a printer operator is notified when said printer status indicates that the printer requires attention.

**78**. A printer polling device in accordance with claim **77**, wherein:

the operator is provided with vendor contact information to facilitate obtaining printer supplies or service.

**79**. A printer polling device in accordance with claim **75**, wherein:

automatic on-line ordering of printer supplies as required by printer status is provided.

**80**. A printer polling device in accordance with claim **45**, wherein the print job comprises at least one of a document, a poster, an image, a coupon, a ticket, a certificate, a check, a list, a schedule, a periodical, a unit of currency, a negotiable instrument, postage, a bill of lading, a lottery or gaming ticket, a token, food stamps, a license, a permit, a pass, a passport, a ballot, a citation, identification, a copy-protection key, a proof-of-purchase, a warranty, a receipt, a transcript, or a library card.

**81**. A printer polling device in accordance with claim **45**, wherein:

an agent program provides a directory of documents to the spooling server, said agent program enabling a client device associated with the print job source to poll the spooling server to determine whether the spooling server requires a document from the directory to complete a print job; and

the document can be uploaded from the client device to the spooling server.

**82**. A printer polling device in accordance with claim **81**, wherein:

the directory is communicated to the printer polling device;

the directory is presented at the printer polling device; and

selection of a print job from the directory is provided for.

**83**. A printer polling device in accordance with claim **81**, wherein said directory is presented via one of a visual presentation or an audio presentation.

**84**. A printer polling device in accordance with claim **45**, wherein a communication device for providing status of the print job stored on the spooling server is provided.

**85**. A printer polling device in accordance with claim **84**, wherein the status of the print job comprises at least one of filename, file size, author, creation date, image, print job lifetime, title, contents, personal identification number, recipient, job number, or reference number.

**86**. A printer polling device in accordance with claim **84**, wherein the communication device comprises one of a telephone, a computer, an Internet appliance, a personal digital assistant device, or a dedicated terminal.

**87**. A printer polling device in accordance with claim **45**, wherein said printer polling device is capable of polling multiple spooling servers.

**88**. A printer polling device in accordance with claim **45**, wherein:

said spooling server is capable of communicating with other servers; and

said spooling server is capable of receiving a print job from at least one of the other servers.

* * * * *



Lexmark, Exhibit 1004
Lexmark v. Flexiworld

UNITED STATES PATENT AND TRADEMARK OFFICE

# CERTIFICATE OF CORRECTION

PATENT NO. : 6,748,471 B1
DATED : June 8, 2004
INVENTOR(S) : Keeney et al.



It is certified that error appears in the above-identified patent and that said Letters Patent is hereby corrected as shown below:

Title page,
Item [*] Notice, should read -- Subject to any disclaimer, the term of this patent should read -- Subject to any disclaimer, the term of this patent is extended or adjusted under 35 U.S.C. 154(b) by 473 days. --
Item [75], Inventors, the city address of the first inventor, **Richard A. Keeney**, should read -- Eagan --.

Column 16,
Line 7, should read -- 8. A method in accordance with claim 6, wherein the print --

Column 19,
Line 31, should read -- 52. A printer polling device in accordance with claim 50, --.

Signed and Sealed this

Seventh Day of September, 2004

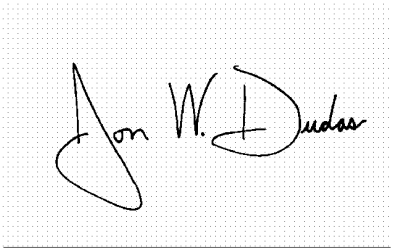

JON W. DUDAS
*Director of the United States Patent and Trademark Office*



Lexmark, Exhibit 1004
Lexmark v. Flexiworld