US010268608B2

(12) **United States Patent**
Lee et al.

(10) **Patent No.: US 10,268,608 B2**
(45) **Date of Patent: *Apr. 23, 2019**

(54) **MEMORY MODULE WITH TIMING-CONTROLLED DATA PATHS IN DISTRIBUTED DATA BUFFERS**

(71) Applicant: **Netlist, Inc.**, Irvine, CA (US)

(72) Inventors: **Hyun Lee**, Ladera Ranch, CA (US); **Jayesh R. Bhakta**, Cerritos, CA (US)

(73) Assignee: **NETLIST, INC.**, Irvine, CA (US)

(*) Notice: Subject to any disclaimer, the term of this patent is extended or adjusted under 35 U.S.C. 154(b) by 0 days.

This patent is subject to a terminal disclaimer.

(21) Appl. No.: **15/820,076**

(22) Filed: **Nov. 21, 2017**

(65) **Prior Publication Data**

US 2018/0095908 A1 Apr. 5, 2018

Related U.S. Application Data

(63) Continuation of application No. 15/426,064, filed on Feb. 7, 2017, now Pat. No. 9,824,035, which is a (Continued)

(51) **Int. Cl.**
G06F 3/00 (2006.01)
G06F 12/00 (2006.01)
(Continued)

(52) **U.S. Cl.**
CPC ***G06F 13/1673*** (2013.01); ***G06F 1/10*** (2013.01); ***G06F 3/0613*** (2013.01);
(Continued)

(58) **Field of Classification Search**
None
See application file for complete search history.

(56) **References Cited**

U.S. PATENT DOCUMENTS

4,218,740 A 8/1980 Bennett et al.
4,249,253 A 2/1981 Gentili et al.
(Continued)

FOREIGN PATENT DOCUMENTS

EP 1816570 A2 8/2007
JP 09237492 9/1997
(Continued)

OTHER PUBLICATIONS

US 6,832,284 B1, 12/2004, Perego et al. (withdrawn)
(Continued)

Primary Examiner — Michael Sun
(74) *Attorney, Agent, or Firm* — Morgan, Lewis & Bockius LLP

(57) **ABSTRACT**

A memory module is operable in a memory system with a memory controller. The memory module comprises memory devices, a module control circuit, and a plurality of buffer circuits coupled between respective sets of data/strobe signal lines in a data bus and respective sets of the memory devices. Each respective buffer circuit includes a data path corresponding to each data signal line in the corresponding set of data/strobe signal lines, and a command processing circuit configured to decode module control signals from the module control circuit and to control the data path in accordance with the module control signals. The data path corresponding to the each data signal line includes at least one tristate buffer controlled by the command processing circuit and a delay circuit configured to delay a signal through the data path by an amount determined by the command processing circuit in response to at least one of the module control signals.

12 Claims, 26 Drawing Sheets

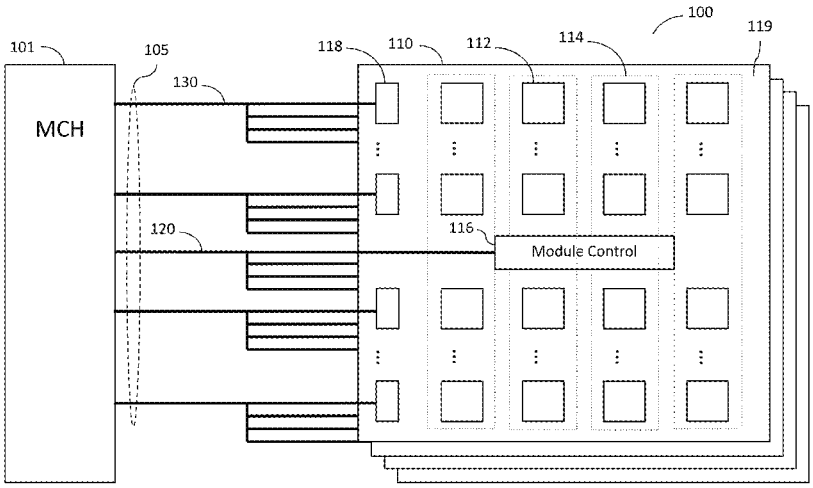

Related U.S. Application Data

continuation of application No. 14/846,993, filed on Sep. 7, 2015, now Pat. No. 9,563,587, which is a continuation of application No. 13/952,599, filed on Jul. 27, 2013, now Pat. No. 9,128,632.

(60) Provisional application No. 61/676,883, filed on Jul. 27, 2012.

(51) **Int. Cl.**

G06F 13/00	(2006.01)
G06F 13/16	(2006.01)
G06F 3/06	(2006.01)
G11C 16/00	(2006.01)
G11C 5/04	(2006.01)
G11C 7/10	(2006.01)
G06F 1/10	(2006.01)
G06F 13/28	(2006.01)
G06F 13/40	(2006.01)
G11C 8/18	(2006.01)
G11C 29/02	(2006.01)
G11C 8/12	(2006.01)
G11C 7/20	(2006.01)
G11C 29/04	(2006.01)

(52) **U.S. Cl.**

CPC ***G06F 3/0647*** (2013.01); ***G06F 3/0656*** (2013.01); ***G06F 3/0659*** (2013.01); ***G06F 3/0683*** (2013.01); ***G06F 13/1642*** (2013.01); ***G06F 13/28*** (2013.01); ***G06F 13/4027*** (2013.01); ***G11C 5/04*** (2013.01); ***G11C 7/1006*** (2013.01); ***G11C 7/1066*** (2013.01); ***G11C 7/1093*** (2013.01); ***G11C 8/18*** (2013.01); ***G11C 16/00*** (2013.01); ***G11C 29/023*** (2013.01); ***G11C 29/028*** (2013.01); ***H05K 999/99*** (2013.01); *G11C 7/109* (2013.01); *G11C 7/20* (2013.01); *G11C 8/12* (2013.01); *G11C 2029/0407* (2013.01)

(56) **References Cited**

U.S. PATENT DOCUMENTS

4,368,515	A	1/1983	Nielsen
4,392,212	A	7/1983	Miyasaka et al.
4,571,676	A	2/1986	Mantellina et al.
4,592,011	A	5/1986	Mantellina et al.
4,633,429	A	12/1986	Lewandowski et al.
4,670,748	A	6/1987	Williams
4,706,214	A	11/1987	Kassai
4,739,473	A	4/1988	Ng
4,866,603	A	9/1989	Chiba
4,958,322	A	9/1990	Kosugi et al.
4,961,172	A	10/1990	Shubat et al.
4,961,204	A	10/1990	Tanaka et al.
4,980,850	A	12/1990	Morgan
5,060,188	A	10/1991	Zulian et al.
5,247,643	A	9/1993	Shottan
5,272,664	A	12/1993	Alexander et al.
5,313,624	A	5/1994	Harriman
5,345,412	A	9/1994	Shiratsuchi
5,357,478	A	10/1994	Kikuda et al.
5,388,072	A	2/1995	Matick et al.
5,388,240	A	2/1995	Olderdissen et al.
5,392,252	A	2/1995	Rimpo et al.
5,426,753	A	6/1995	Moon
5,463,590	A	10/1995	Watanabe
5,483,497	A	1/1996	Mochizuki et al.
5,485,589	A	1/1996	Kocis et al.
5,495,435	A	2/1996	Sugahara
5,513,135	A	4/1996	Dell et al.
5,532,954	A	7/1996	Bechtolsheim et al.
5,537,584	A	7/1996	Miyai et al.
5,541,448	A	7/1996	Carpenter
5,572,691	A	11/1996	Koudmani
5,581,498	A	12/1996	Ludwig et al.
5,590,071	A	12/1996	Kolor et al.
5,602,999	A	2/1997	Hyatt
5,617,559	A	4/1997	Le et al.
5,630,096	A	5/1997	Zuravleff
5,638,534	A	6/1997	Mote, Jr.
5,649,159	A	7/1997	Le et al.
5,655,113	A	8/1997	Leung
5,655,153	A	8/1997	Sandorfi
5,699,542	A	12/1997	Mehta et al.
5,702,984	A	12/1997	Bertin et al.
5,703,826	A	12/1997	Hush et al.
5,717,851	A	2/1998	Yishay et al.
5,724,604	A	3/1998	Moyer
5,745,914	A	4/1998	Connolly et al.
5,729,716	A	5/1998	Lee et al.
5,764,590	A	6/1998	Iwamoto et al.
5,784,705	A	7/1998	Leung
5,802,395	A	9/1998	Connolly et al.
5,802,541	A	9/1998	Reed
5,805,520	A	9/1998	Anglada et al.
5,822,251	A	10/1998	Bruce et al.
5,905,401	A	5/1999	Sher
RE36,229	E	6/1999	Cady
5,909,388	A	6/1999	Mueller
5,926,827	A	7/1999	Dell et al.
5,926,839	A	7/1999	Katayama
5,953,215	A	9/1999	Karabatsos
5,953,280	A	9/1999	Watsui
5,958,025	A	9/1999	Sonobe
5,959,930	A	9/1999	Sakurai
5,963,464	A	10/1999	Dell et al.
5,966,736	A	10/1999	Gittinger et al.
5,973,392	A	10/1999	Senba et al.
5,974,493	A	10/1999	Okumura et al.
6,011,710	A	1/2000	Wieggers
6,018,787	A	1/2000	Ip
6,044,032	A	3/2000	Li
6,061,754	A	5/2000	Cepulis
6,070,217	A	5/2000	Connolly et al.
6,070,227	A	5/2000	Rokicki
6,097,652	A	8/2000	Roh
6,108,745	A	8/2000	Gupta et al.
6,115,278	A	9/2000	Deneroff et al.
6,134,638	A	10/2000	Olarig et al.
6,141,245	A	10/2000	Bertin
6,151,271	A	11/2000	Lee
6,154,418	A	11/2000	Li
6,154,419	A	11/2000	Shakkarwar
6,173,357	B1	1/2001	Ju
6,185,654	B1	2/2001	Van Doren
6,188,641	B1	2/2001	Uchida
6,205,516	B1	3/2001	Usami
6,209,074	B1	3/2001	Dell et al.
6,223,650	B1	5/2001	Johnson
6,226,709	B1	5/2001	Goodwin et al.
6,226,736	B1	5/2001	Niot
6,233,650	B1	5/2001	Johnson et al.
6,247,088	B1	6/2001	Seo et al.
6,260,127	B1	7/2001	Olarig et al.
6,262,938	B1	7/2001	Lee
6,317,352	B1	11/2001	Halbert et al.
6,349,051	B1	2/2002	Klein
6,381,140	B1	4/2002	Liao
6,400,637	B1	6/2002	Akamatsu et al.
6,408,356	B1	6/2002	Dell
6,414,868	B1	7/2002	Wong et al.
6,415,374	B1	7/2002	Faue et al.
6,438,062	B1	8/2002	Curtis
6,446,158	B1	9/2002	Karabatsos
6,446,184	B2	9/2002	Dell et al.
6,453,381	B1	9/2002	Yuan et al.
6,470,417	B1	10/2002	Kolor et al.
6,480,439	B2	11/2002	Tokutome et al.
6,487,102	B1	11/2002	Halbert et al.
6,502,161	B1	12/2002	Perego et al.

(56) **References Cited**

U.S. PATENT DOCUMENTS

6,518,794 B2 2/2003 Coteus et al.
6,526,473 B1 2/2003 Kim
6,530,007 B2 3/2003 Olarig et al.
6,530,033 B1 3/2003 Raynham et al.
6,546,476 B1 4/2003 Gillingham
6,553,449 B1 4/2003 Dodd et al.
6,553,450 B1 4/2003 Dodd et al.
6,618,320 B2 9/2003 Hasegawa et al.
6,618,791 B1 9/2003 Dodd et al.
6,621,496 B1 9/2003 Ryan
6,625,081 B2 9/2003 Roohparvar et al.
6,625,687 B1 9/2003 Halbert et al.
6,636,446 B2 10/2003 Lee
6,636,935 B1 10/2003 Ware et al.
6,646,949 B1 11/2003 Ellis et al.
6,658,509 B1 12/2003 Bonella et al.
6,674,684 B1 1/2004 Shen
6,681,301 B1 1/2004 Mehta et al.
6,683,372 B1 1/2004 Wong et al.
6,697,888 B1 2/2004 Halbert et al.
6,704,910 B2 3/2004 Hong
6,705,877 B1 3/2004 Li et al.
6,717,855 B2 4/2004 Underwood
6,717,885 B2 4/2004 Lai
6,721,843 B1 4/2004 Estakhri
6,721,860 B2 4/2004 Klein
6,738,880 B2 5/2004 Lai et al.
6,742,098 B1 5/2004 Halbert et al.
6,747,887 B2 6/2004 Halbert et al.
6,754,746 B1 6/2004 Leung et al.
6,754,797 B2 6/2004 Wu et al.
6,785,189 B2 8/2004 Jacobs et al.
6,788,592 B2 9/2004 Nakata et al.
6,799,252 B1 9/2004 Bauman
6,807,125 B2 10/2004 Coteus et al.
6,807,650 B2 10/2004 Lamb et al.
6,813,196 B2 11/2004 Park et al.
6,832,303 B2 12/2004 Tanaka
6,834,014 B2 12/2004 Yoo et al.
6,854,042 B1 2/2005 Karabatsos
6,880,094 B2 4/2005 La Berge
6,889,304 B2 5/2005 Perego et al.
6,912,615 B2 6/2005 Nicolai
6,912,628 B2 6/2005 Wicki et al.
6,925,028 B2 8/2005 Hosokawa et al.
6,944,694 B2 9/2005 Pax
6,948,084 B1 9/2005 Manapat et al.
6,950,366 B1 9/2005 Lapidus et al.
6,954,281 B2 10/2005 Fukuda et al.
6,961,281 B2 11/2005 Wong et al.
6,981,089 B2 12/2005 Dodd et al.
6,982,892 B2 1/2006 Lee et al.
6,982,893 B2 1/2006 Jakobs
6,990,043 B2 1/2006 Kuroda et al.
6,996,686 B2 2/2006 Doblar et al.
7,007,130 B1 2/2006 Holman
7,007,175 B2 2/2006 Chang et al.
7,024,518 B2 4/2006 Halbert et al.
7,046,538 B2 5/2006 Kinsley et al.
7,047,361 B2 5/2006 Chong et al.
7,054,179 B2 5/2006 Cogdill et al.
7,065,626 B2 6/2006 Schumacher et al.
7,072,231 B2 7/2006 Pax
7,073,041 B2 7/2006 Dwyer et al.
7,078,793 B2 7/2006 Ruckerbauer et al.
7,093,066 B2 8/2006 Klein
7,120,727 B2 10/2006 Lee et al.
7,124,260 B2 10/2006 La Berge et al.
7,127,584 B1 10/2006 Thompson et al.
7,130,308 B2 10/2006 Haddock et al.
7,130,952 B2 10/2006 Nanki et al.
7,133,960 B1 11/2006 Thompson et al.
7,133,972 B2 11/2006 Jeddeloh
7,142,461 B2 11/2006 Janzen
7,149,841 B2 12/2006 La Berge
7,167,967 B2 1/2007 Bungo et al.
7,181,591 B2 2/2007 Tsai
7,191,302 B2 3/2007 Usami
7,200,021 B2 4/2007 Radhuram
7,225,303 B2 5/2007 Choi
7,227,910 B2 6/2007 Lipka
7,254,036 B2 8/2007 Pauley et al.
7,266,639 B2 9/2007 Radhuram
7,272,709 B2 9/2007 Zitlaw et al.
7,281,079 B2 10/2007 Bains et al.
7,286,436 B2 10/2007 Bhakta et al.
7,289,386 B2 10/2007 Bhakta et al.
7,334,150 B2 2/2008 Ruckerbauer et al.
7,346,750 B2 3/2008 Ishikawa
7,356,639 B2 4/2008 Perego et al.
7,370,238 B2 5/2008 Billick et al.
7,379,361 B2 5/2008 Co et al.
7,437,591 B1 10/2008 Wong
7,461,182 B2 12/2008 Fukushima et al.
7,464,225 B2 12/2008 Tsern
7,471,538 B2 12/2008 Hofstra
7,532,537 B2 5/2009 Solomon et al.
7,619,912 B2 11/2009 Bhakta et al.
7,636,274 B2 12/2009 Solomon et al.
7,730,254 B2 6/2010 Risse
7,864,627 B2 1/2011 Bhakta et al.
7,865,674 B2 1/2011 Gower et al.
7,881,150 B2 2/2011 Solomon et al.
7,884,619 B1 * 2/2011 Chong G01R 31/3016 324/601
7,916,574 B1 3/2011 Solomon et al.
7,990,746 B2 8/2011 Rajan
8,001,434 B1 8/2011 Lee et al.
8,081,536 B1 12/2011 Solomon et al.
8,089,795 B2 1/2012 Rajan
8,130,560 B1 3/2012 Rajan et al.
8,189,328 B2 5/2012 Kanapathippillai
8,214,616 B2 * 7/2012 Ware G06F 13/1684 711/104
8,233,303 B2 7/2012 Best
8,244,971 B2 8/2012 Rajan
8,250,295 B2 8/2012 Amidi et al.
8,335,894 B1 12/2012 Rajan
8,417,870 B2 4/2013 Lee et al.
8,516,185 B2 8/2013 Lee et al.
8,516,188 B1 8/2013 Solomon et al.
8,565,033 B1 10/2013 Manochararajah et al.
8,689,064 B1 4/2014 Lee et al.
8,756,364 B1 6/2014 Bhakta et al.
8,782,350 B2 7/2014 Lee et al.
8,856,464 B2 10/2014 Karamcheti
8,949,519 B2 * 2/2015 Rajan G11C 5/02 365/189.2
2001/0008006 A1 7/2001 Klein
2002/0038405 A1 3/2002 Leddige
2002/0039323 A1 * 4/2002 Tokutome G11C 7/1066 365/233.12
2002/0048195 A1 4/2002 Klein
2002/0112119 A1 8/2002 Halbert et al.
2003/0070052 A1 4/2003 Lai
2004/0098528 A1 5/2004 Janzen
2004/0105292 A1 6/2004 Matsui
2005/0010737 A1 1/2005 Ware et al.
2005/0257109 A1 11/2005 Averbui
2005/0281096 A1 12/2005 Bhakta et al.
2006/0077731 A1 * 4/2006 Ware G11C 5/04 365/194
2006/0117152 A1 6/2006 Amidi et al.
2006/0179206 A1 8/2006 Brittain et al.
2006/0233012 A1 10/2006 Sekiguchi et al.
2006/0259711 A1 11/2006 Oh
2006/0262586 A1 11/2006 Solomon et al.
2006/0267172 A1 11/2006 Nguyen et al.
2006/0277355 A1 12/2006 Ellsberry et al.
2007/0058409 A1 3/2007 Ruckerbauer
2007/0064462 A1 3/2007 Matsui
2007/0070669 A1 3/2007 Tsern
2007/0217559 A1 * 9/2007 Stott G11C 7/1051 375/355

(56) **References Cited**

U.S. PATENT DOCUMENTS

2007/0293094	A1	12/2007	Aekins	
2008/0025137	A1	1/2008	Rajan et al.	
2008/0037412	A1*	2/2008	Geile	G06F 17/14 370/208
2008/0046631	A1	2/2008	Takaku et al.	
2008/0104352	A1	5/2008	Talbot	
2008/0162790	A1	7/2008	Im	
2009/0103387	A1	4/2009	Shau	
2009/0198924	A1	8/2009	Shaeffer et al.	
2009/0248969	A1	10/2009	Wu et al.	
2009/0296503	A1	12/2009	Chu	
2010/0070690	A1	3/2010	Amer et al.	
2010/0091540	A1	4/2010	Bhakta et al.	
2010/0125681	A1	5/2010	Patel	
2010/0228891	A1	9/2010	Talbot	
2010/0271092	A1*	10/2010	Zerbe	G06F 13/4243 327/161
2011/0016250	A1	1/2011	Lee et al.	
2011/0016269	A1	1/2011	Lee et al.	
2011/0085408	A1	4/2011	Solomon	
2011/0090749	A1	4/2011	Bhakta et al.	
2011/0125966	A1	5/2011	Amidi et al.	
2012/0256639	A1*	10/2012	Pausini	G01R 31/31709 324/613
2014/0029370	A1*	1/2014	Koshizuka	G11C 7/1051 365/233.13

FOREIGN PATENT DOCUMENTS

JP	I0-092169	10/1998
JP	2000285674	10/2000
JP	2000311485	10/2000
JP	2002184176	6/2002
JP	2003007963	1/2003
JP	2008046989	2/2008

OTHER PUBLICATIONS

Non-Final Office Action, U.S. Appl. No. 13/412,243, dated Jan. 2, 2014, 20 pages.
Non-final office action, U.S. Appl. No. 13/288,850, dated Oct. 11, 2013, 24 pages.
Non-final office action, U.S. Appl. No. 13/411,344, dated Dec. 31, 2013, 28 pages.
Non-final office action, U.S. Appl. No. 13/473,413, dated Nov. 17, 2011, 46 pages.
Response to non-final office action dated Oct. 14, 2013 for U.S. Appl. No. 13/288,850, filed Jan. 13, 2014, 15 pages.
Response to non-final office action dated Dec. 31, 2013 for U.S. Appl. No. 13/411,344, filed Mar. 31, 2014, 12 pages.
Patent Owner's Response to Office Action dated Nov. 13, 2012 for Reexamination Control Nos. 95/000,578; 95/000,579, and 95/001,339, filed Jan. 14, 2013, 96 pages.
Patent Owner's Response to Office Action dated Dec. 19, 2012 for Reexamination Control No. 95/001,758, filed Mar. 19, 2013, 61 pages.
Patent Owner's Response to Office Action dated Sep. 26, 2013 for Reexamination Control No. 95/001,758, filed Nov. 26, 2013, 85 pages.
Third Party Requester's Comments after Non-Final Action dated Sep. 26, 2013 for Reexamination Control No. 95/001,758, filed Dec. 26, 2013,.
Patent Owner's Appeal Brief for Reexamination Control Nos. 95/000,546 and 95/000,577, filed Oct. 2, 2013, 46 pages.
Patent Trial and Appeal Board Decision on Appeal for Reexamination Control No. 95/001/337, mailed Jan. 16, 2014, 30 pages.
Patent Trial and Appeal Board Decision on Appeal for Reexamination Control No. 95/001/381, mailed Jan. 16, 2014, 24 pages.
Action Closing Prosecution mailed Mar. 27, 2014 for Reexamination Control No. 95/001,758, filed Sep. 14, 2011, 40 pages.
Action Closing Prosecution mailed Mar. 27, 2014 for Reexamination Control No. 95/001,339, filed Jun. 8, 2010, 106 pages.
Notice of Allowance, U.S. Appl. No. 12/504,131, dated Feb. 12, 2013, 52 pgs.
Response to Non-Final Office Action dated Jan. 2, 2014, filed Apr. 2, 2004, for U.S. Appl. No. 13/287,042, filed Nov. 1, 2011, 12 pages.
Non-Final Action Closing Prosecution mailed Sep. 1, 2010, for Control No. 95/001,339, filed Apr. 10, 2010, 17 pages.
Non-Final Action Closing Prosecution mailed Jun. 21, 2011, for Control No. 95/001,381, filed Jun. 9, 2010, 34 pages.
Non-Final Action Closing Prosecution mailed Mar. 12, 2012, for Control No. 95/001,337, filed Apr. 19, 2010, 33 pages.
Non-Final Action mailed Aug. 27, 2010, for Control No. 95/000,546, filed May 11, 2010, 16 pages.
Non-Final Action mailed Sep. 8, 2010, for Control No. 95/001,381, filed Jun. 9, 2010, 17 pages.
Non-Final Action mailed Apr. 4, 2011, for Control No. 95/001,339, filed Apr. 20, 2010, 61 pages. (merged with 95/000,578 and 95/000,579).
Non-Final Action mailed Jun. 15, 2011, for Control No. 95/001,381, filed Jun. 9, 2010, 33 pages.
Non-Final Action mailed Sep. 27, 2011, for Control No. 95/001,337, filed Apr. 19, 2010, 19 pages.
Non-Final Action mailed Oct. 4, 2011, for Control No. 95/001,339, filed Apr. 20, 2010, 77 pages. (merged with 95/000,578 and 95/000,579).
Non-Final Action mailed Oct. 14, 2011, for Control No. 95/001,339, filed Apr. 30, 2010, 99 pages. (merged with 95/000,578 and 95/000,579).
Non-Final Office Action dated Nov. 16, 2011, for U.S. Appl. No. 95/001,758 filed Sep. 14, 2011, 25 pages.
Reexam Appl. No. 95/000,546 for U.S. Pat. No. 7,289,386, filed May 11, 2010, Netlist, Inc., Entire File History.
Reexam Appl. No. 95/000,577 for U.S. Pat. No. 7,289,386, filed Oct. 20, 2010, Netlist, Inc., Entire File History.
Reexam Appl. No. 95/000,578 for U.S. Pat. No. 7,619,912, filed Oct. 20, 2010, Netlist, Inc., Entire File History.
Reexam Appl. No. 95/000,579 for U.S. Pat. No. 7,619,912, filed Oct. 21, 2010, Netlist, Inc., Entire File History.
Reexam App. No. 95/001,337 for U.S. Pat. No. 7,636,274, filed Jun. 4, 2010, Netlist, Inc., Entire File History.
Reexam Appl. No. 95/001,381 for U.S. Pat. No. 7,532,537, filed Jun. 9, 2010, Netlist, Inc., Entire File History.
Reexam Appl. No. 95/001,338; for U.S. Pat. No. 7,532,537, filed Apr. 19, 2010, Netlist, Inc., Entire File History.
Reexam Appl. No. 95/001,758 for U.S. Pat. No. 7,864,627, filed Sep. 15, 2010, Netlist, Inc., Entire File History.
Reexam Appl. No. 95/001,339 for U.S. Pat. No. 7,619,912, filed Jun. 8, 2010 Netlist, Inc., Entire File History.
Reexam Appl. No. 95/002,399 for U.S. Pat. No. 8,250,295, filed Sep. 15, 2010, Netlist, Inc., Entire File History.
U.S. Appl. No. 11/075,395, filed Mar. 7, 2005 Netlist Inc., Entire Prosecution History.
U.S. Appl. No. 11/173,175, filed Jul. 1, 2005 Netlist, Inc., Entire Prosecution History.
U.S. Appl. No. 11/862,931, filed Sep. 27, 2007 Netlist, Inc., Entire Prosecution History.
U.S. Appl. No. 12/577,682, filed Oct. 12, 2009, Netlist, Inc., Entire Prosecution History.
U.S. Appl. No. 12/954,492, filed Nov. 24, 2010, Netlist, Inc., Entire Prosecution History.
U.S. Appl. No. 12/912,623, filed Oct. 26, 2010, Netlist, Inc., Entire Prosecution History.
U.S. Appl. No. 11/335,875, filed Jan. 19, 2006, Netlist, Inc., Entire Prosecution History.
U.S. Appl. No. 12/408,652, filed Mar. 20, 2009, Netlist, Inc., Entire Prosecution History.
U.S. Appl. No. 12/629,827, filed Dec. 2, 2009, Netlist Inc., Entire Prosecution History.
U.S. Appl. No. 12/955,711, filed Nov. 29, 2010, Netlist, Inc., Entire Prosecution History.
U.S. Appl. No. 12/981,380, filed Dec. 29, 2010, Netlist Inc., Entire Prosecution History.
U.S. Appl. No. 13/154,172, filed Jun. 6, 2011, Netlist, Inc., Entire Prosecution History.

(56) **References Cited**

OTHER PUBLICATIONS

U.S. Appl. No. 13/287,042, filed Nov. 1, 2011, Netlist, Inc., Entire Prosecution History.
U.S. Appl. No. 13/473,413, filed May 16, 2012, Netlist, Inc., Entire Prosecution History.
U.S. Appl. No. 13/032,470, filed Feb. 22, 2011, Netlist Inc., Entire Prosecution History.
U.S. Appl. No. 13/287,081, filed Nov. 1, 2011, Netlist, Inc., Entire Prosecution History.
U.S. Appl. No. 13/971,231, filed Aug. 20, 2013, Netlist, Inc., Entire Prosecution History.
U.S. Appl. No. 12/422,853, filed Apr. 13, 2009, Netlist, Inc., Entire Prosecution History.
U.S. Appl. No. 13/412,243, filed Mar. 5, 2012, Netlist, Inc., Entire Prosecution History.
U.S. Appl. No. 12/422,925, filed Apr. 13, 2009, Netlist, Inc., Entire Prosecution History.
U.S. Appl. No. 13/183,253, filed Jul. 14, 2011, Netlist, Inc., Entire Prosecution History.
U.S. Appl. No. 13/745,790, filed Jan. 19, 2013, Netlist, Inc., Entire Prosecution History.
U.S. Appl. No. 14/229,844, filed Mar. 29, 2014, Netlist, Inc., Entire Prosecution History.
U.S. Appl. No. 12/504,131, filed Jul. 16, 2009, Netlist, Inc., Entire Prosecution History.
U.S. Appl. No. 12/761,179, filed Apr. 15, 2010, Netlist, Inc., Entire Prosecution History.
U.S. Appl. No. 13/288,850, filed Nov. 3, 2011, Netlist, Inc., Entire Prosecution History.
U.S. Appl. No. 13/411,344, filed Mar. 2, 2012, Netlist, Inc., Entire Prosecution History.
U.S. Appl. No. 13/952,599, filed Jul. 27, 2013, Netlist, Inc., Entire Prosecution History.
U.S. Appl. No. 13/411,344, filed Mar. 2, 201, Lee, Entire Prosecution.
U.S. Appl. No. 13/970,606, filed Aug. 20, 20, Netlist, Entire Prosecution.
U.S. Appl. No. 13/971,231, filed Aug. 20, 20, Netlist, Entire Prosecution.
U.S. Appl. No. 14/229,844, Mar. 29, 20, Netlist, Entire Prosecution.
U.S. Appl. No. 14/324,990, filed Jul. 7, 201, Netlist, Entire Prosecution.
U.S. Appl. No. 14/337,168, filed Jul. 21, 20, Netlist, Entire Prosecution.
International Search Report and Written Opinion, PCT/US2010/040826, Sep. 27.
Written Opinion of the International Preliminary Examining Authority, PCT/US2010/040826, dated Oct. 24, 2011.
International Preliminary Report on Patentability, PCT/US2010/040826, dated Nov. 28.
International Search Report and Written Opinion, PCT/US2011/059209, dated Jan. 30, 2013.
Notice of Allowance dated Feb. 12, 2013, for U.S. Appl. No. 12/504,131, filed Jul. 16, 2009, 52 pages.
Non-Final Office Action dated Sep. 13, 2012, for U.S. Appl. No. 12/761,179, filed Apr. 15, 2010, 20 pages.
Response to Non-Final Office Action dated Sep. 13, 2012, for U.S. Appl. No. 12/761,179, filed Mar. 13, 2013, 16 pages.
Notice of Allowance dated Jul. 11, 2013, for U.S. Appl. No. 12/761,179 filed Apr. 15, 2010, 37 pages.
Inter Partes Review Case No. IPR2014-01029, Petition for Inter Partes Review of U.S. Pat. No. 8,516,185, filed on Jun. 24, 2014.
Inter Partes Review Case No. IPR2014-01029, Exhibit 1008 to Petition for Inter Partes Review, "Declaration of Charles J. Neuhauser, Ph.D. under 37 C.F.R. § 1.68," filed on Jun.
Inter Partes Review Case No. IPR2014-01029, Patent Owner's Preliminary Response pursuant to 37 C.F.R. § 42.107, filed on Oct. 17, 2014.
Inter Partes Review Case No. IPR2014-01029, Decision Denying Institution of Inter Partes Review 37 C.F.R. § 42.108, issued Dec. 16, 2014.
Inter Partes Review Case No. IPR2014-01369, Corrected Petition for Inter Partes Review of Claims 1-19 of U.S. Pat. No. 8,516,185, filed on Sep. 22, 2014.
Inter Partes Review Case No. IPR2014-01369, Exhibit 1008 to Corrected Petition for Inter Partes Review, "Declaration of Dr. Nader Bagherzadeh under 37 C.F.R. § 1.68," filed on Sep. 22, 2014.
Inter Partes Review Case No. IPR2014-01369, Exhibit 1013 to Corrected Petition for Inter Partes Review, "Webster's II New College Dictionary," filed on Sep. 22, 2014.
Inter Partes Review Case No. IPR2014-01369, Exhibit 1014 to Corrected Petition for Inter Partes Review, "Standard Dictionary of Electrical and Electronics Terms," IEEE 1988, filed on Sep. 22, 2014.
Inter Partes Review of U.S. Pat. No. 7,881,150, IPR Case No. IPR2014-00882, Corrected Petition for Inter Partes Review of U.S. Pat. No. 7,881,150, filed on Jul. 8.
Inter Partes Review of U.S. Pat. No. 7,881,150, IPR Case No. IPR2014-00882, Exhibit 1007 to Petition for Inter Partes Review, "Declaration of Dr. Srinivasan Jagannathan," filed on Jun. 22, 2014.
Inter Partes Review of U.S. Pat. No. 7,881,150, IPR Case No. IPR2014-00882, Patent Owner's Preliminary Response Pursuant to 37 C.F.R. § 42.107, filed Oct. 7, 2014.
Inter Partes Review of U.S. Pat. No. 7,881,150, IPR Case No. IPR2014-00882, Decision—Institution of Inter Partes Review 37 C.F.R. § 42.108, issued Dec. 16.
Inter Partes Review of U.S. Pat. No. 8,081,536, IPR Case No. IPR2014-00883, Corrected Petition for Inter Partes Review of U.S. Pat. No. 8,081,536, filed on Jul. 8.
Inter Partes Review of U.S. Pat. No. 8,081,536, IPR Case No. IPR2014-00883, Exhibit 1011 to Petition for Inter Partes Review, "Declaration of Dr. Srinivasan Jagannathan," filed on Jun. 21, 2014.
Inter Partes Review of U.S. Pat. No. 8,081,536, IPR Case No. IPR2014-00883, Patent Owner's Preliminary Response Pursuant to 37 C.F.R. § 42.107, filed Oct. 7, 2014.
Inter Partes Review of U.S. Pat. No. 8,081,536, IPR Case No. IPR2014-00883, Decision—Institution of Inter Partes Review 37 C.F.R. § 42.108, issued Dec. 16.
Inter Partes Review of U.S. Pat. No. 7,881,150, IPR Case No. IPR2014-01011, Corrected Petition for Inter Partes Review ofU.S. Pat. No. 7,881,150, filed on Jul. 8.
Inter Partes Review of U.S. Pat. No. 7,881,150, IPR Case No. IPR2014-01011, Exhibit 1007 to Petition for Inter PartesReview, "Declaration of Dr. Srinivasan Jagannathan." filed on Jun. 22, 2014.
Inter Partes Review of U.S. Pat. No. 7,881,150, IPR Case No. IPR2014-01011, Patent Owner's Preliminary Response Pursuant to 37 C.F.R. § 42.107, filed Oct. 7, 2014.
Inter Partes Review of U.S. Pat. No. 7,881,150, IPR Case No. IPR2014-01011, Decision—Institution of Inter Partes Review 37 C.F.R. § 42.108, issued Dec. 16.
Inter Partes Review of U.S. Pat. No. 7,881,150, IPR Case No. IPR2014-01011, Exhibit 3001 to Decision—Institution of Inter Partes Review, Excerpts from IEEE Dictionary, issued Dec. 16, 2014.
Inter Partes Review of U.S. Pat. No. 7,881,150, IPR Case No. IPR2014-01011, Exhibit 3002 to Decision—Institution of Inter Partes Review, Excerpts from IEEE Dictionary, issued Dec. 16,2014.
Inter Partes Review of U.S. Pat. No. 7,881,150, IPR Case No. IPR2014-01011, Exhibit 3003 to Decision—Institution of Inter Partes Review, Excerpts from Oxford English Dictionary, issued Dec. 16, 2014.
Inter Partes Review of U.S. Pat. No. 7,881,150, IPR Case No. IPR2014-01011, Exhibit 3004 to Decision—Institution of Inter Partes Review, Excerpts from Oxford English Dictionary, issued Dec. 16, 2014.
McCluskey, Edward J., Logic Design Principles with Emphasis on Testable Semicustom Circuits, Prentice Hall, 1986, pp. 104-107 and 119-120.
U.S. District Court Northern District of California, Case No. 4:13-CV-05889-YGR, *Netlist, Inc.* v. *Smart Storage Systems, Inc.,*

(56) **References Cited**

OTHER PUBLICATIONS

and Diablo Technologies, Inc., Smart Storage Systems, Inc.'s Invalidity Contentions, dated Jun. 6, 2014.
U.S. District Court Northern District of California, Case No. 4:13-CV-05889-YGR, *Netlist, Inc.* v. *Smart Storage Systems, Inc., and Diablo Technologies, Inc.*, Exhibits E.1-E.7 to "Smart Storage Systems, Inc.'s Invalidity Contentions," dated Jun. 6, 2014.
U.S. District Court Northern District of California, Case No. 4:13-CV-05889-YGR, *Netlist, Inc.* v. *Smart Storage Systems, Inc., and Diablo Technologies, Inc.*, Exhibits F.1-F.5 to "Smart Storage Systems, Inc.'s Invalidity Contentions," dated Jun. 6, 2014.
U.S. District Court Northern District of California, Case No. 4:13-CV-05889-YGR, *Netlist, Inc.* v. *Smart Storage Systems, Inc., and Diablo Technologies, Inc.*, Exhibits G.1-G.6 to "Smart Storage Systems, Inc.'s Invalidity Contentions," dated Jun. 6, 2014.
U.S. District Court Northern District of California, Case No. 4:13-CV-05889-YGR, *Netlist, Inc.* v. *Smart Storage Systems, Inc., and Diablo Technologies, Inc.*, Exhibit H to "Smart Storage Systems, Inc.'s Invalidity Contentions," dated Jun. 6, 2014.
U.S. District Court Northern District of California, Case No. 4:13-CV-05889-YGR, *Netlist, Inc.* v. *Smart Storage Systems, Inc., and Diablo Technologies, Inc.*, Diablo Technologies, Inc.'s Invalidity Contentions, dated Jun. 6, 2014.
U.S. District Court Northern District of California, Case No. 4:13-CV-05889-YGR, *Netlist, Inc.* v. *Smart Storage Systems, Inc., and Diablo Technologies, Inc.*, Exhibits D-1 to D6 to "Diablo Technologies, Inc.'s Invalidity Contentions," dated Jun. 6, 2014.
U.S. District Court Northern District of California, Case No. 4:13-CV-05889-YGR, *Netlist, Inc.* v. *Smart Storage Systems, Inc., and Diablo Technologies, Inc.*, Exhibits F-1 to F-5 to "Diablo Technologies, Inc.'s Invalidity Contentions," dated Jun. 6, 2014.
U.S. District Court Northern District of California, Case No. 4:13-CV-05889-YGR, *Netlist, Inc.* v. *Smart Storage Systems, Inc., and Diablo Technologies, Inc.*, Exhibits G-1 to G-6 to "Diablo Technologies, Inc.'s Invalidity Contentions," dated Jun. 6, 2014.
U.S. District Court Northern District of California, Case No. 4:13-CV-05889-YGR, *Netlist, Inc.* v. *Smart Storage Systems, Inc., and Diablo Technologies, Inc.*, Exhibit H to "Diablo Technologies, Inc.'s Invalidity Contentions," dated Jun. 6, 2014.
Altera, ACEX iK, Programmable Logic Device Family, Data Sheet, May 2003, Ver 3.4.
Horowitz, "The Art of Electronics," Cambridge Univ. Press, 1989, selected pages.
Huang et al, "An Efficient Parallel Transparent BIST Method for Multiple Embedded Memory Buffers," VLSI Design 2011, p. 379.
Jacob, Bruce L.; "Synchronous DRAM Architectures, Organizations, and Alternative Technologies". University of Maryland, Dec. 10, 2002.
JEDEC Standard No. 21-C Section 4.5.7, 168 Pin Registered SDRAM DIMM Family, Release 7, Oct., 2001.
JEDEC 21-C, Section 4.6.1, 278 Pin Buffered SDRAM DIMM Family, Jun. 1997.
JEDEC Standard No. 21-C Section 4.1.2.5, Appendix E, "Specific PD's for Synchronous DRAM (SDRAM)," pp. 1-25, May 2003.
JEDEC Standard, "Fully Buffered DIMM (FBDIMM): DFx Design for Validation and Test," JESD82- 28, Feb. 2008.
Anonymous. (Dec. 1996). "Applications Note: Understanding DRAM Operation," IBM, 10 pages.
Behrens, S. "HP Printer Memory Explained", The ZonkPage, Last Updated Jan. 21, 2004. Accessed Feb. 10, 2013, Retrieved from the Internet: URL.
Non-final office action, U.S. Appl. No. 13/411,344, Jul. 7, 2014, 19 pages.
Non-Final Office Action, U.S. Appl. No. 13/412,243, Jan. 2, 2014, 20 pages.
Non-final office action, U.S. Appl. No. 13/288,850, Oct. 11, 2013, 24 pages.
Non-final office action, U.S. Appl. No. 13/411,344, Dec. 31, 2013, 28.
Non-final office action, U.S. Appl. No. 13/473,413, Nov. 17, 2011, 46.
Response to non-final office action dated Oct. 11, 2013 for U.S. Appl. No. 13/288,850, filed Jan. 13, 2014, 15 pages.
Notice of Allowance, U.S. Appl. No. 12/504,131, dated Feb. 12, 2013, 52 pages.
Non-Final Office Action, dated Jan. 2, 2014, for U.S. Appl. No. 13/287,042, filed Nov. 1, 2011, 42 pages.
Office Action dated Apr. 2, 2014, for Japanese Patent Application No. 2012-520662 and English translation thereof 7 pages.
Miles J. Murdocca et al., "Principles of Computer Architecture", Prentice Hall, 2000, pp. 249-251.
Intel® 6400/6402 Advanced Memory Buffer Datasheet, published Oct. 2006.
Micron "Synchronous DRAM Module MT18LSDT472," 1998, Micron Technology, Inc., 17 pages.
PC133 SDRAM Registered DIMM Design Specification, Revision 1.1, Aug. 1999, 62 pages.
Micron DOR SDRAM DIMM Module 256MB. 512 MB. Mar. 2002. 26 pages.
Reese, "Introduction to LogicSynthesis using Verilog HDL," Morgan & Claypool Publishers, 2006. pp. 1-28.
64 & 72 Pin Zip/Simm Sram Module, JEDEC, Standard No. 21-C, www.iedec.com/download/search/4 sub --04 sub --01.pdf Jun. 1997 pp.
Distributed Memory Mapping. IP.com. IPCOM000014788D. 2000.
Intel Corporation, 66/100 MHz PC SDRAM 64-Bit Non-ECC/Parity 144 Pin Unbuffered SO-DIMM Specification. Revision 1.0. Feb. 1999.
Intel Corporation, PC SDRAM Registered DIMM Design Support Document, Revision 1.2, Oct. 1998.
JEDEC "JEDEC Standard: Double Data Rate (DOR) SDRAM Specification", JESD79C Mar. 2003.
JEDEC Standard No. 21-C, 4.20-2-168 Pin, PC133 SDRAM Registered Design Specification, Revision 1.4, Releasella, Feb. 2002.
Jedec Standard No. 21-C, DOR SDRAM PC2100 and PC1600 DOR SDRAM Registered DIMM Design Specification. Revision 1.3 Release llb.Jan. 2002.
Jedec Standard, "Definition of the SSTV16859 2.5 V 13-Bit to 26-Bit SSTL.sub.--2 Registered Buffer for Stacked DOR DIMM Applications," JFSD82-4B May 2003.
Jin et al. "Embedded Memory in System-On-Chip Design: Architecture and Prototype Implementation." CCECE. 2003. pp. 141-146.
Jin et al. "Prototype Implementation and Evaluation of a Multibank Embedded Memory Archtecture in Programmable Logic," IEEE, 2003, pp. 13-16.
Lee et al. "A banked-promotion translation lookaside buffer system," Journal of Systems Architecture. vol. 47. 2002. pp. 1065-1078.
Lee et al. "An on-chip cache compression technique to reduce decompression overhead and design complexity," Journal of Systems Architecture, vol. 46, 2000, pp. 1365-1382.
Micron "DOR SDRAM RDIMM, MT36VD0F12872-1GB, MT36V0DF25672-2GB," 2002 Micron Technology, Inc. 20 pages.
Sunaga et al. "Continuous RAS Access Method in Multiple-bank DRAM Chip," IP.com, IPCOM000123375D, 1998.
Takai et al. "250 Mbyte/s Synchronous DRAM Using a 3-Stage-Pipelined Architecture," IEEE Journal of Solid-State Circuits, vol. 29, No. 4, p. 426-431, dated Apr. 1994.
Toal et al. "A 32-Bit SoPC Implementation of a PS." Proceedings of the Eighth IEEE International Symposium on Computers and Communications, 2003, pp. 1530-1346.
Tudruj, Marek. "Dynamically reconfigurable heterogenous multiprocessor systems with transputer-controlled communication," Journal of Systems Architecture, vol. 43, 1997, pp. 27-32.
JEDEC Standard JESD79D, "Double Data Rate (DOR) SDRAM Specification," published Jan. 2004 (Feb. 2004).
PC2100 and PC1600 DOR SDRAM Registered DIMM Design Specification JEDEC, Standard No. 21-C, Revision 1.3, Jan. 2002, pp. 4.20.4-1.
Notice of Allowance, U.S. Appl. No. 13/970,606, filed Aug. 20, 2013, dated Jun. 27, 2016.

(56) **References Cited**

OTHER PUBLICATIONS

Non-Final Office Action, U.S. Appl. No. 13/970,606, filed Aug. 20, 2013, dated Nov. 23, 2015.
Response to Non-Final Office Action, U.S. Appl. No. 13/970,606, filed Aug. 20, 2013, dated Mar. 23, 2016.

* cited by examiner

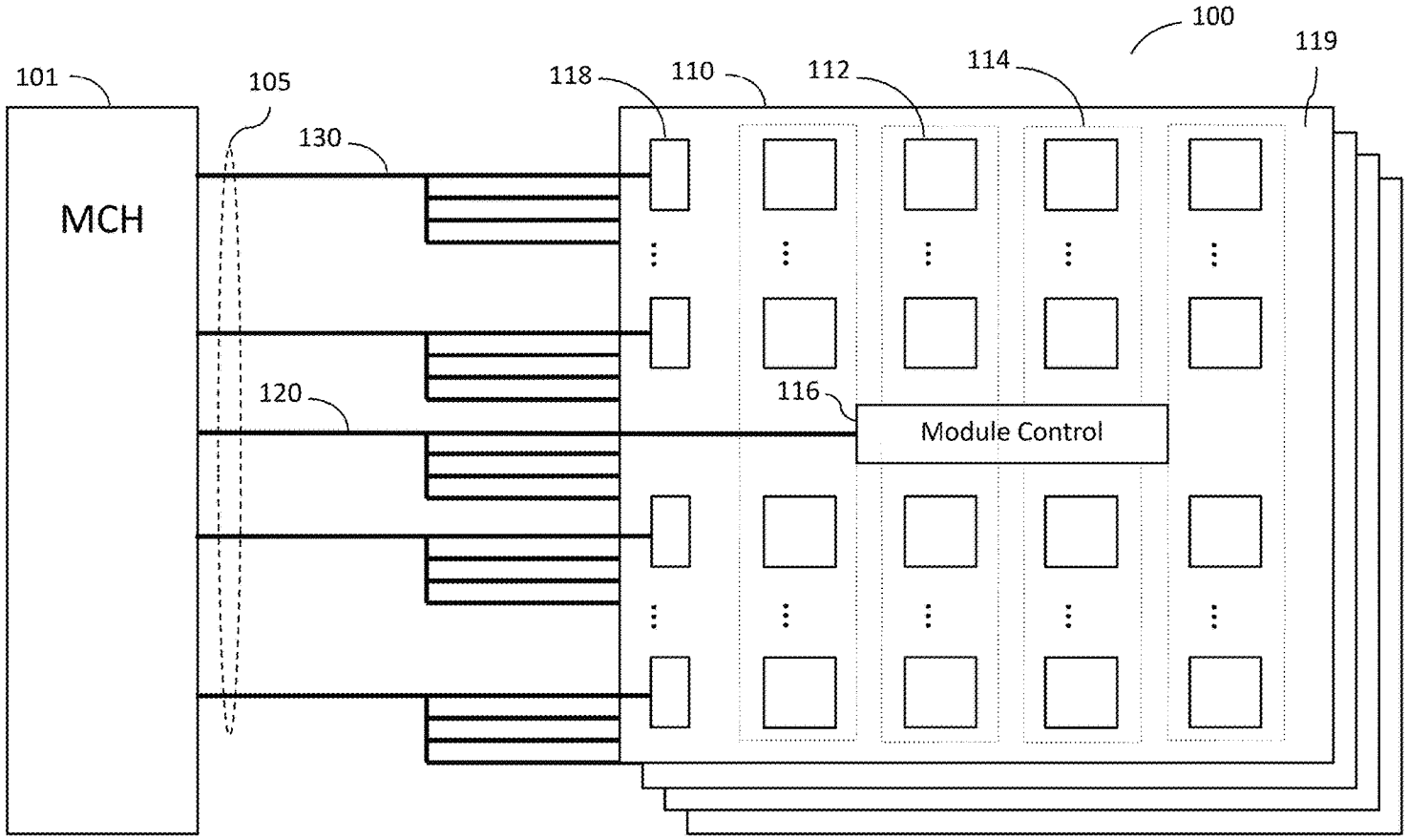

FIG. 1

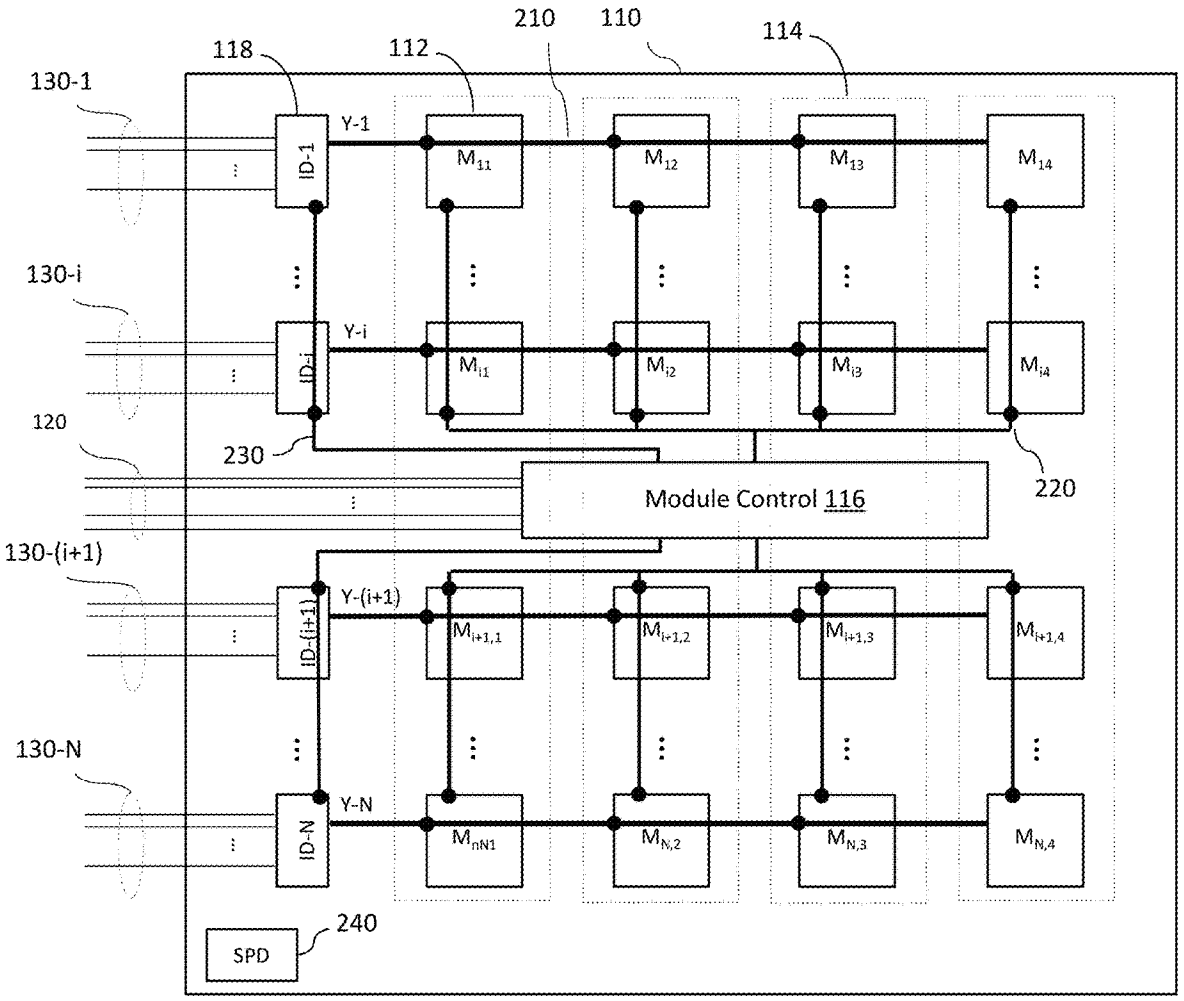
130-1
118
112
210
110
114
ID-1
Y-1
M11
M12
M13
M14
130-i
ID-i
Y-i
Mi1
Mi2
Mi3
Mi4
120
230
220
Module Control 116
130-(i+1)
ID-(i+1)
Y-(i+1)
Mi+1,1
Mi+1,2
Mi+1,3
Mi+1,4
130-N
ID-N
Y-N
MnN1
MN,2
MN,3
MN,4
240
SPD

FIG. 2A

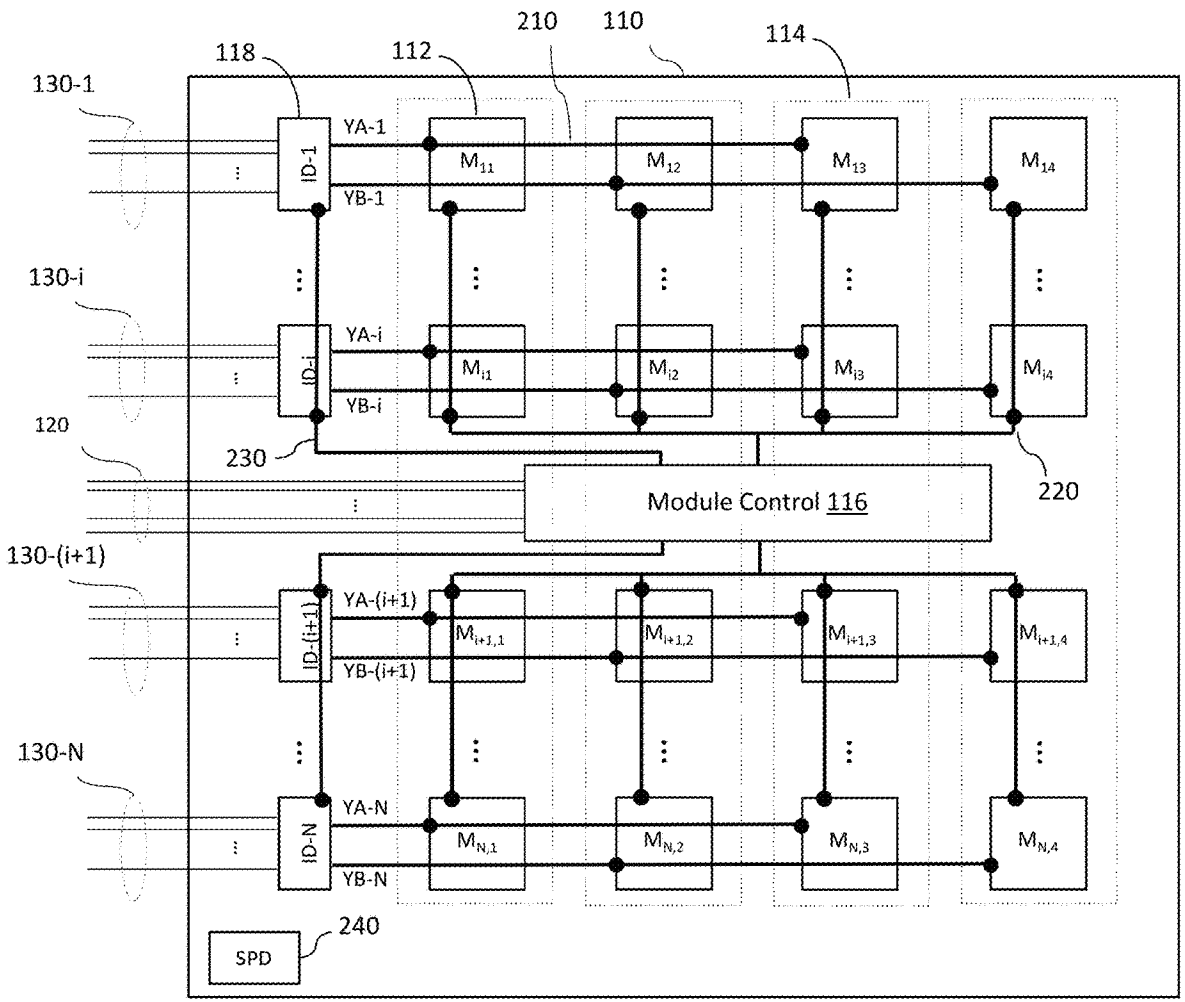
130-1
118
112
210
110
114
ID-1
YA-1
YB-1
M11
M12
M13
M14
130-i
ID-i
YA-i
YB-i
Mi1
Mi2
Mi3
Mi4
120
230
220
Module Control 116
130-(i+1)
ID-(i+1)
YA-(i+1)
YB-(i+1)
Mi+1,1
Mi+1,2
Mi+1,3
Mi+1,4
130-N
ID-N
YA-N
YB-N
MN,1
MN,2
MN,3
MN,4
SPD
240

FIG. 2B

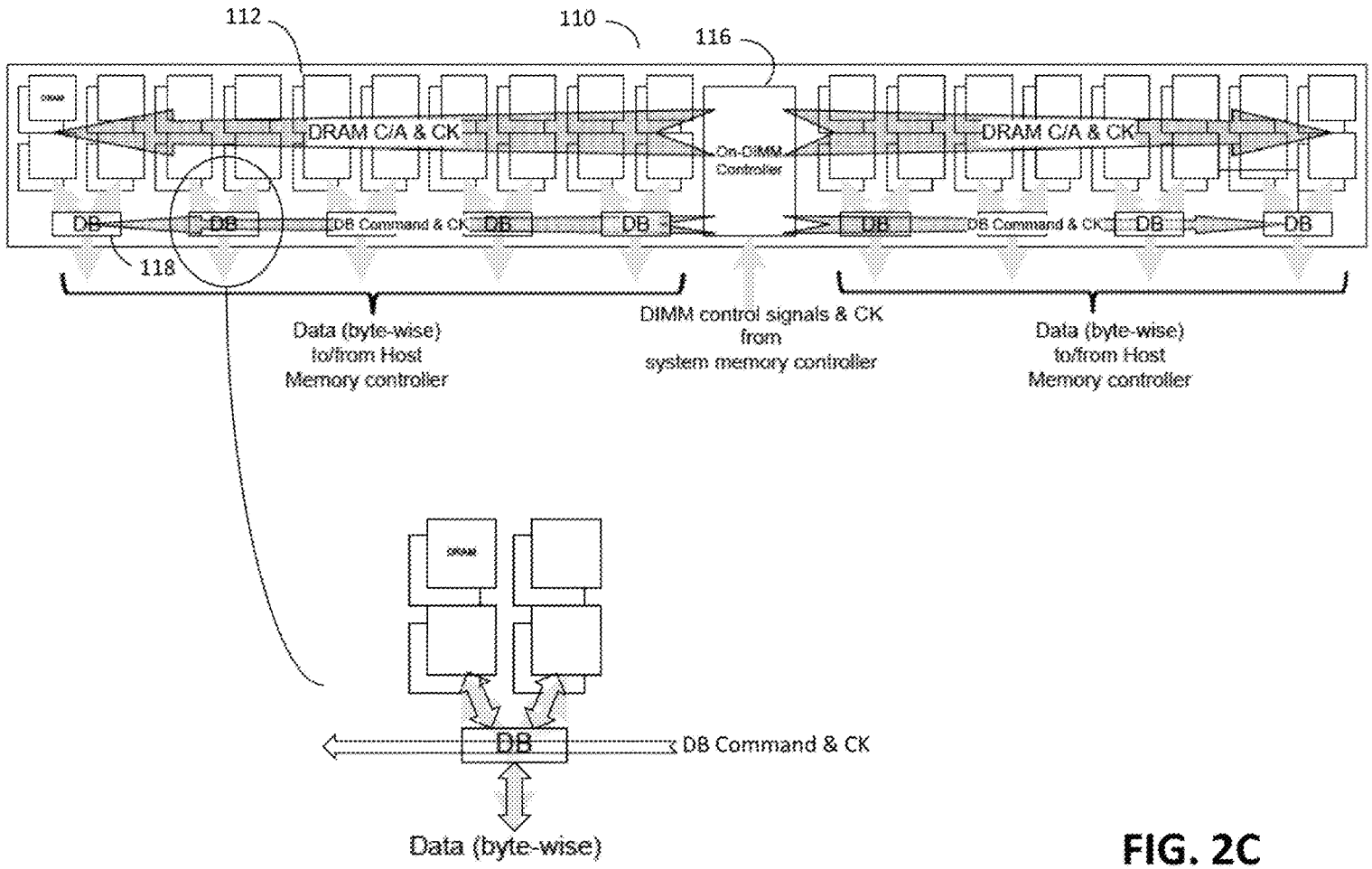
112
110
116
DRAM C/A & CK
On-DIMM Controller
DRAM C/A & CK
DB
DB
DB Command & CK
DB
DB
DB
DB Command & CK
DB
DB
118
Data (byte-wise) to/from Host Memory controller
DIMM control signals & CK from system memory controller
Data (byte-wise) to/from Host Memory controller
DB
DB Command & CK
Data (byte-wise)

FIG. 2C

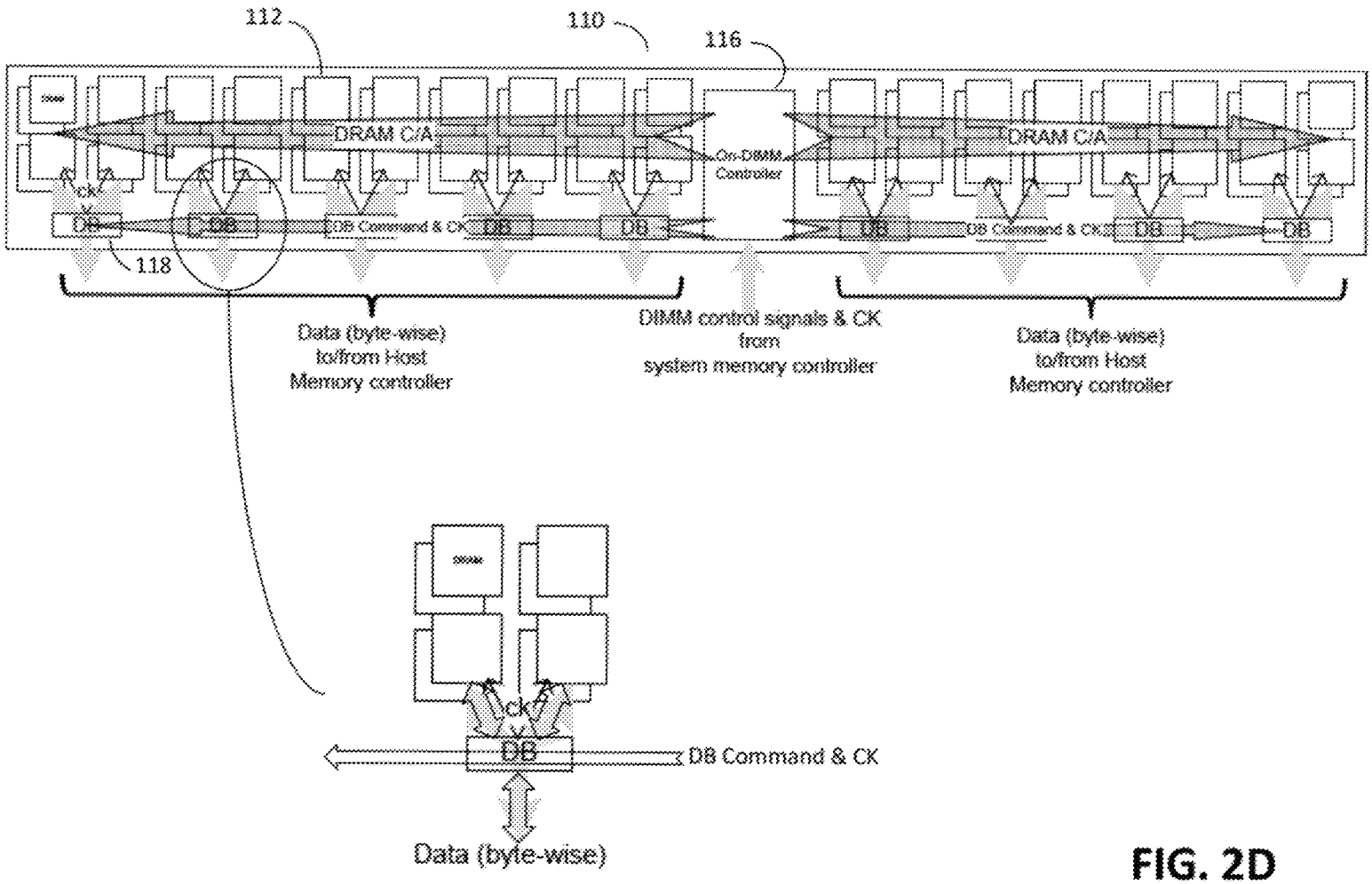
112
110
116
DRAM C/A
On-DIMM Controller
DRAM C/A
CK
DB
DB Command & CK
DB
DB
DB
DB Command & CK
DB
DB
118
Data (byte-wise) to/from Host Memory controller
DIMM control signals & CK from system memory controller
Data (byte-wise) to/from Host Memory controller
CK
DB
DB Command & CK
Data (byte-wise)

FIG. 2D

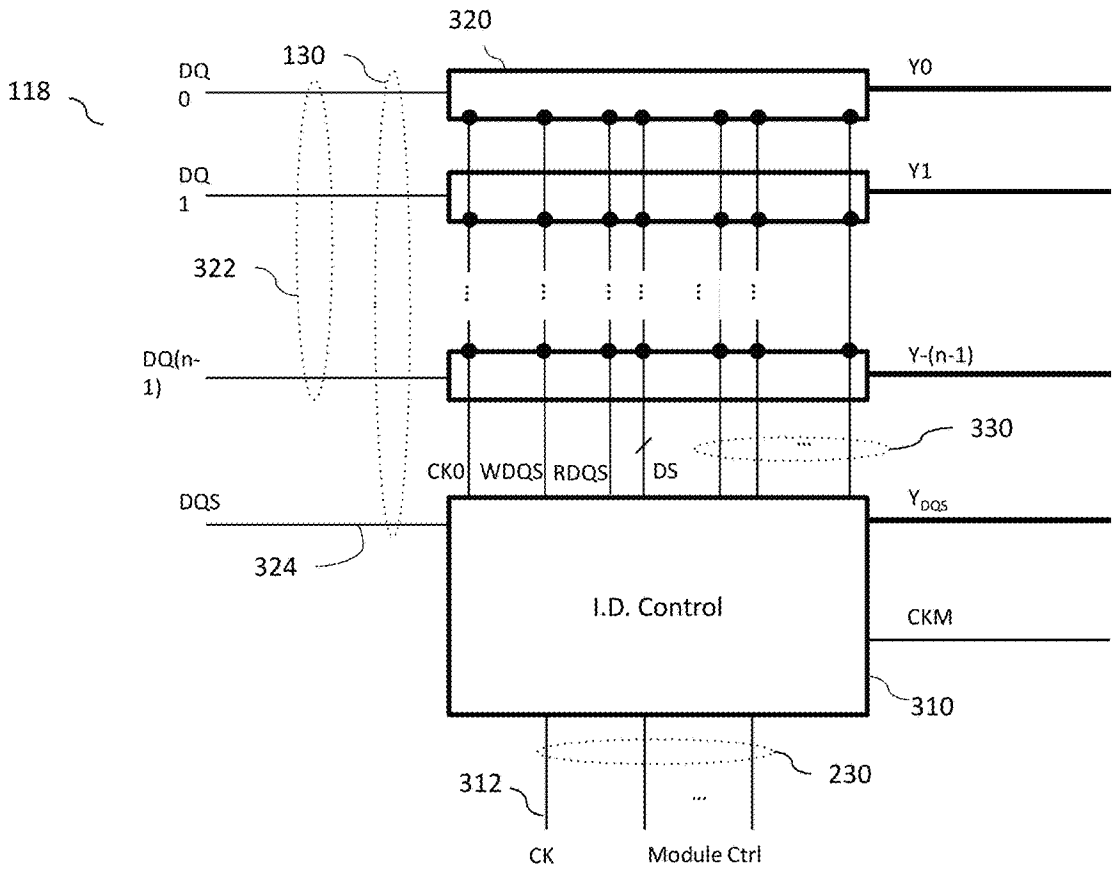
118
DQ 0
DQ 1
DQ(n-1)
DQS
130
320
322
324
Y0
Y1
Y-(n-1)
330
CK0
WDQS
RDQS
DS
Y_{DQS}
I.D. Control
CKM
310
312
230
CK
Module Ctrl

FIG. 3

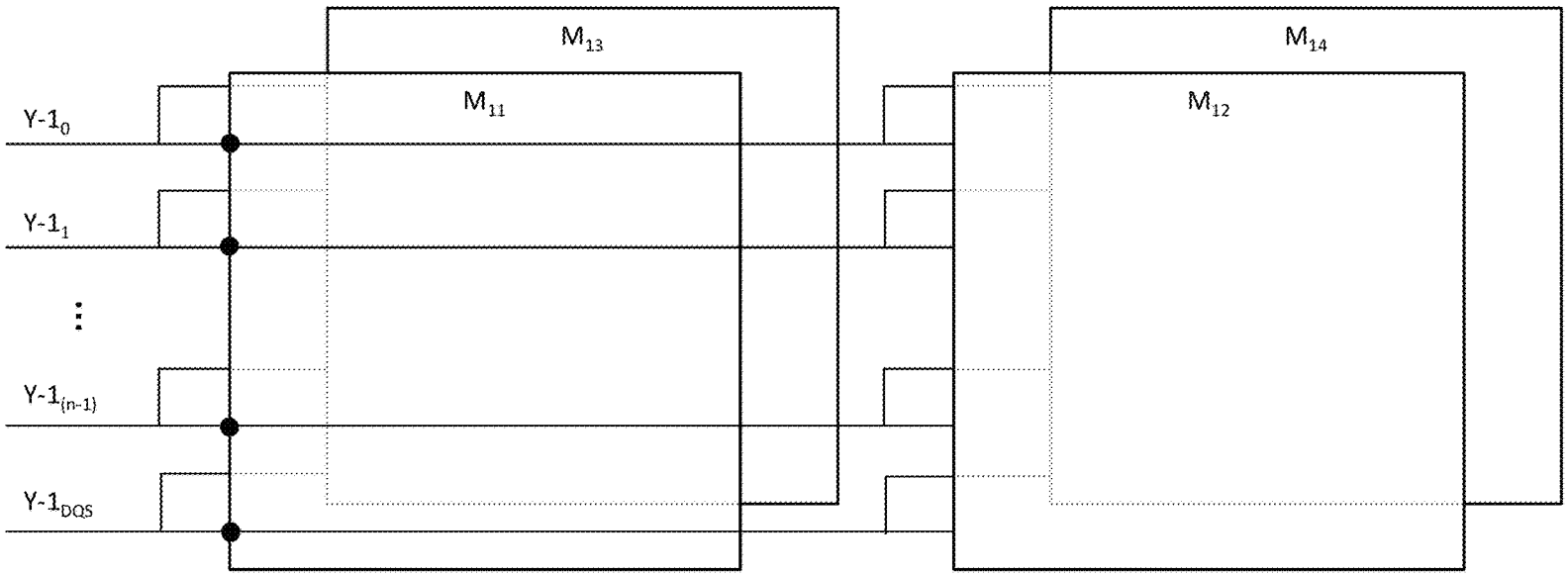

FIG. 4A

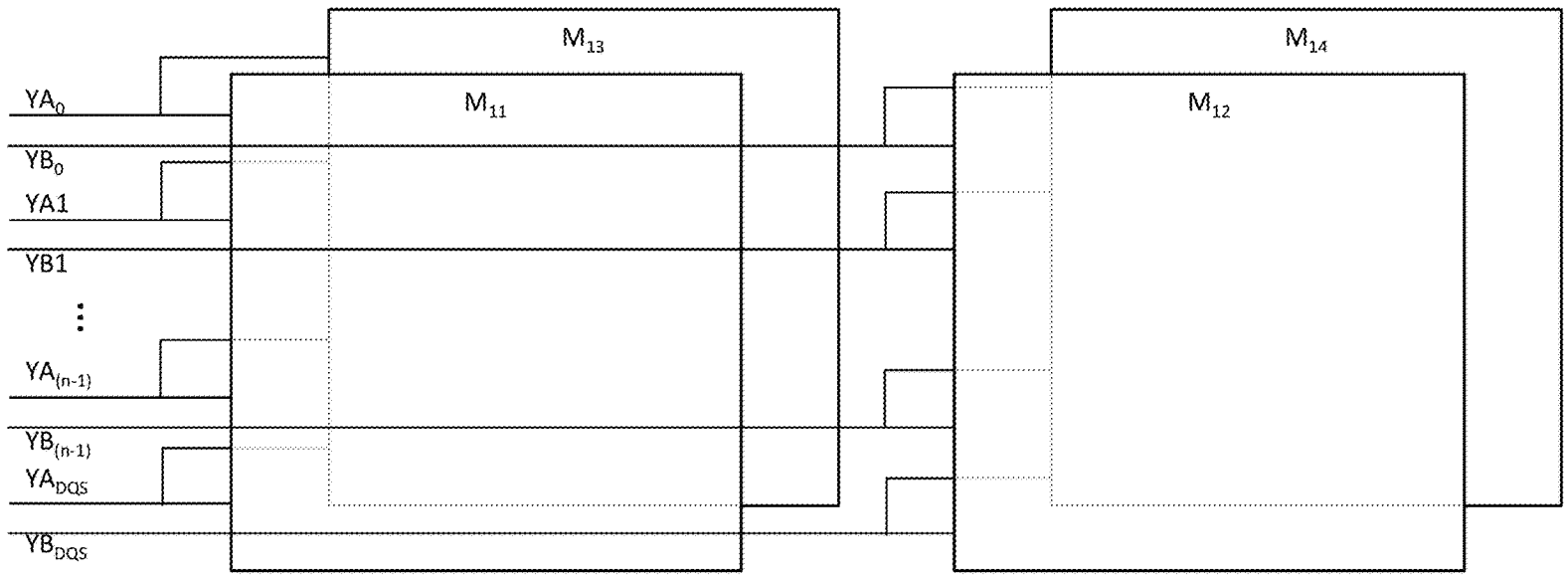

FIG. 4B

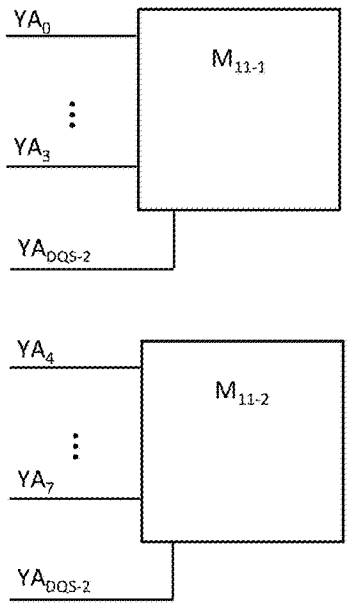
YA0
YA3
M11-1
YADQS-2
YA4
YA7
M11-2
YADQS-2

FIG. 5A

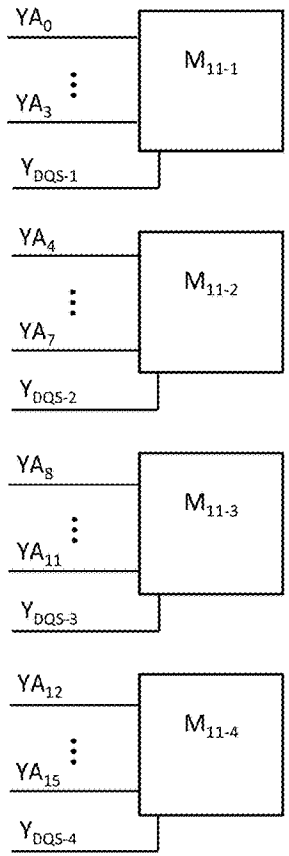
YA0
YA3
M11-1
YDQS-1
YA4
YA7
M11-2
YDQS-2
YA8
YA11
M11-3
YDQS-3
YA12
YA15
M11-4
YDQS-4

FIG. 5B

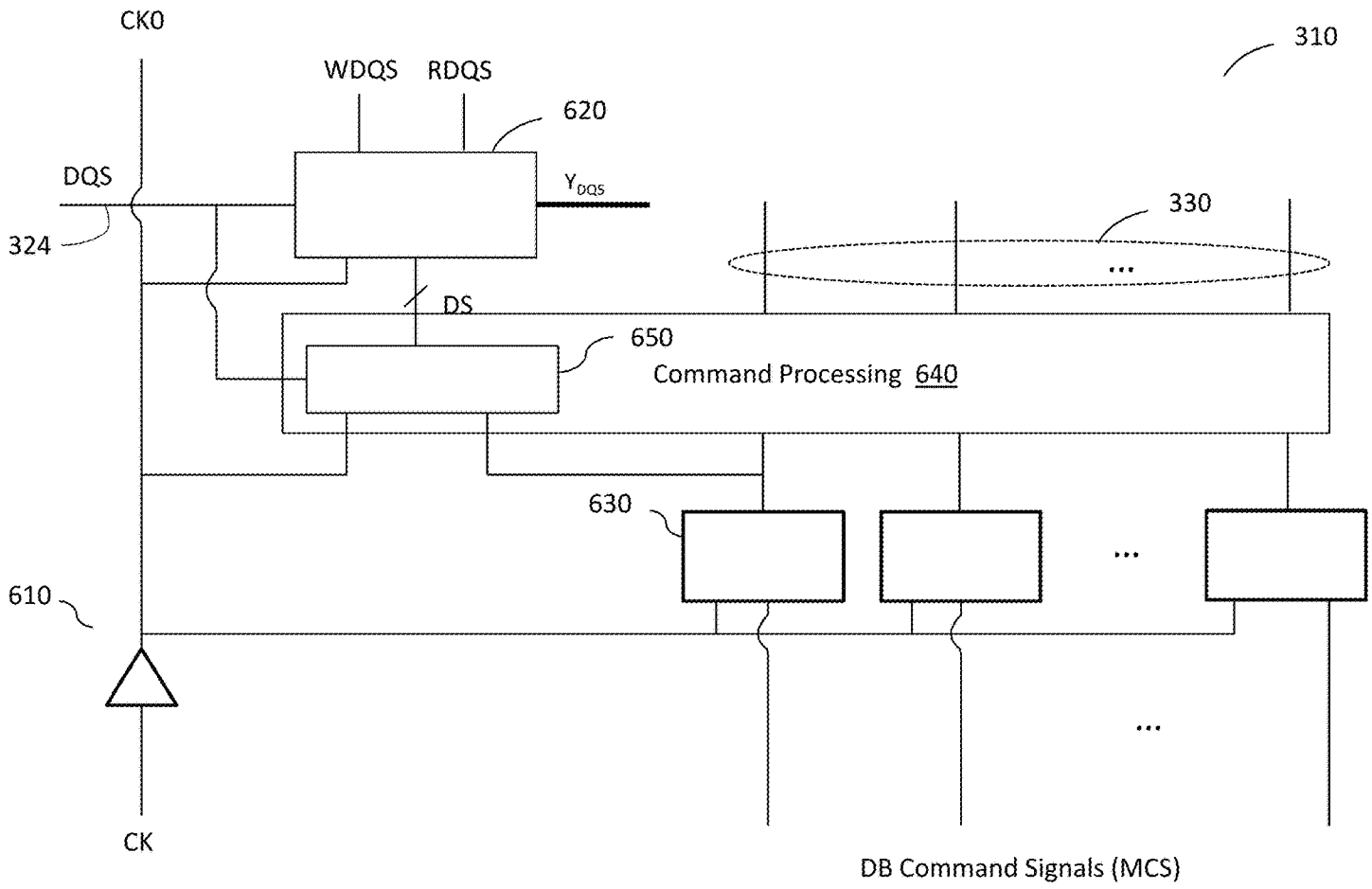
CK0
WDQS
RDQS
620
310
DQS
Y_{DQS}
330
324
DS
650
Command Processing 640
630
610
CK
DB Command Signals (MCS)

FIG. 6

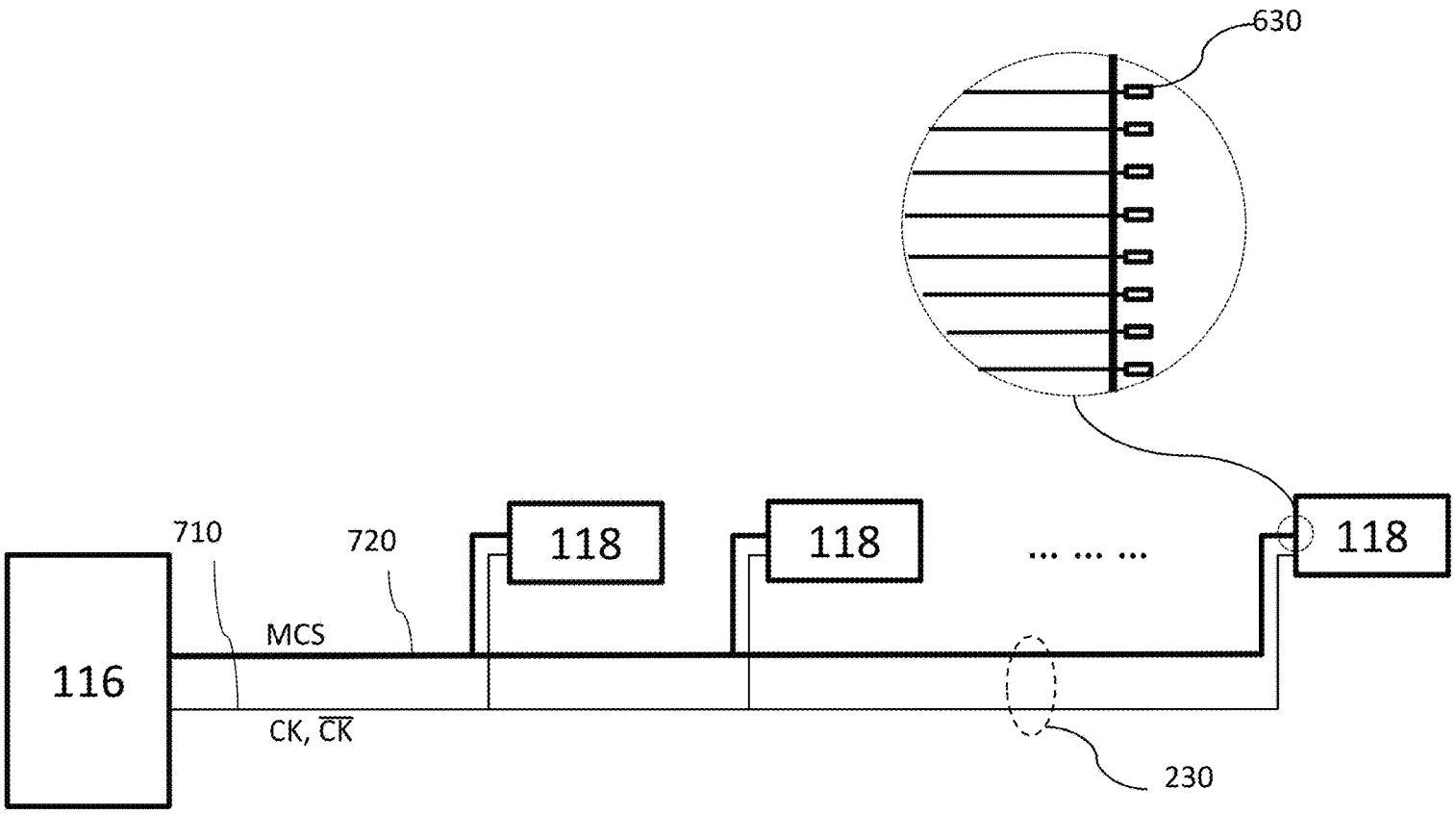

FIG. 7

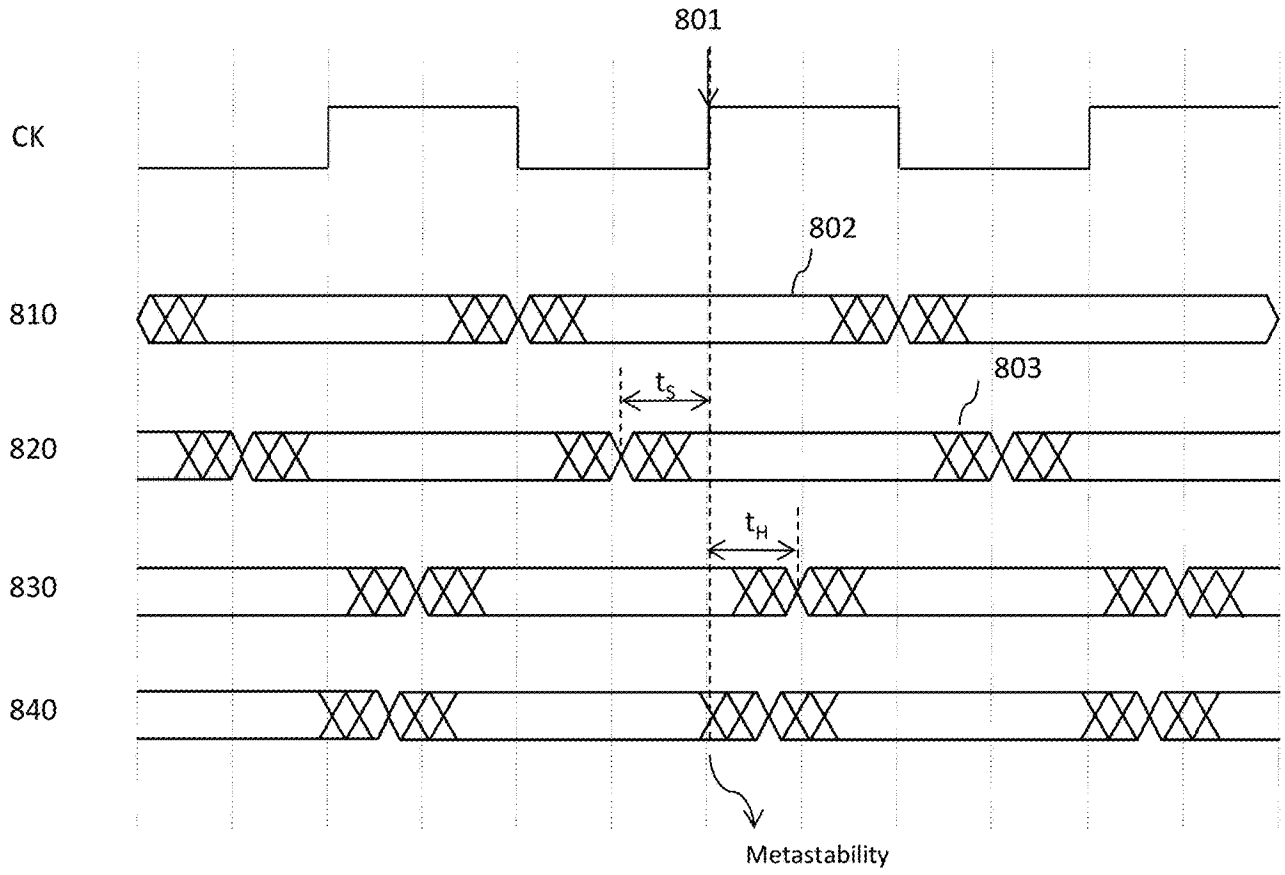

FIG. 8

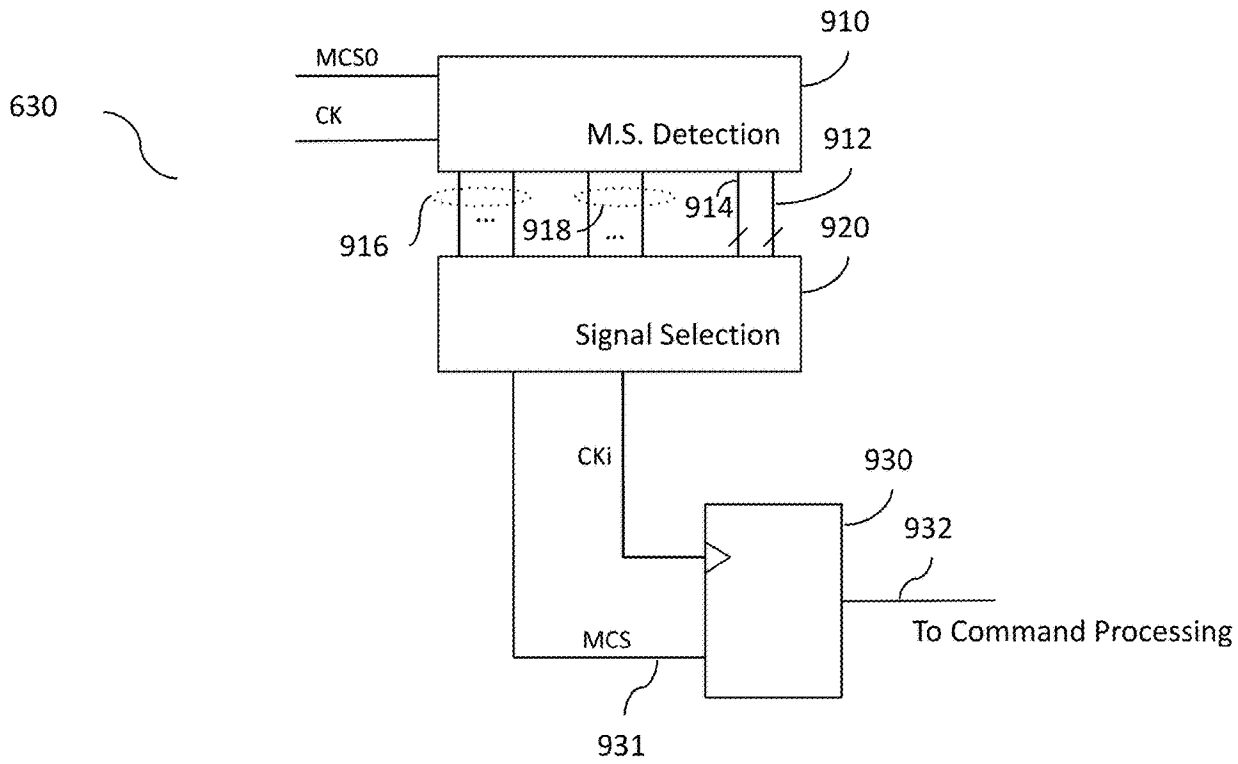
630
MCS0
CK
M.S. Detection
910
912
914
916
918
920
Signal Selection
CKi
930
932
To Command Processing
MCS
931

FIG. 9

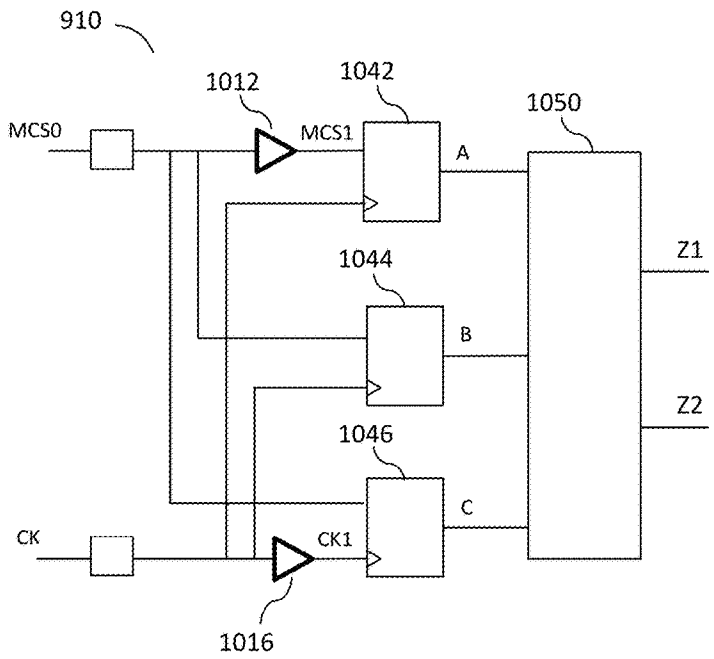

FIG. 10A

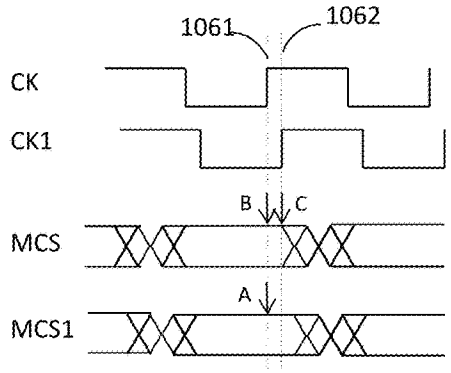

FIG. 10B

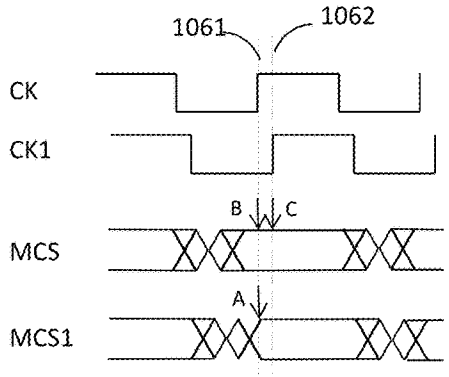

FIG. 10C

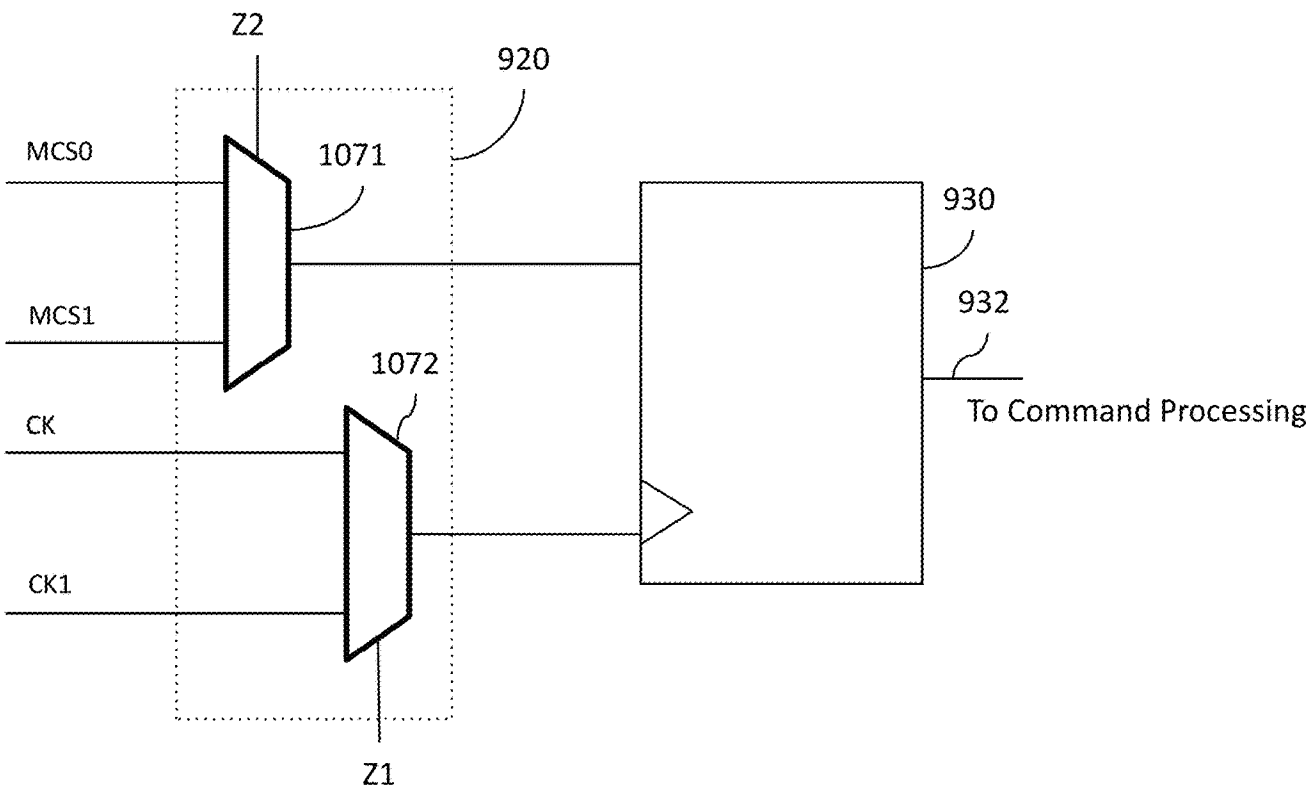
Z2
920
MCS0
1071
930
MCS1
932
1072
To Command Processing
CK
CK1
Z1

FIG. 10D

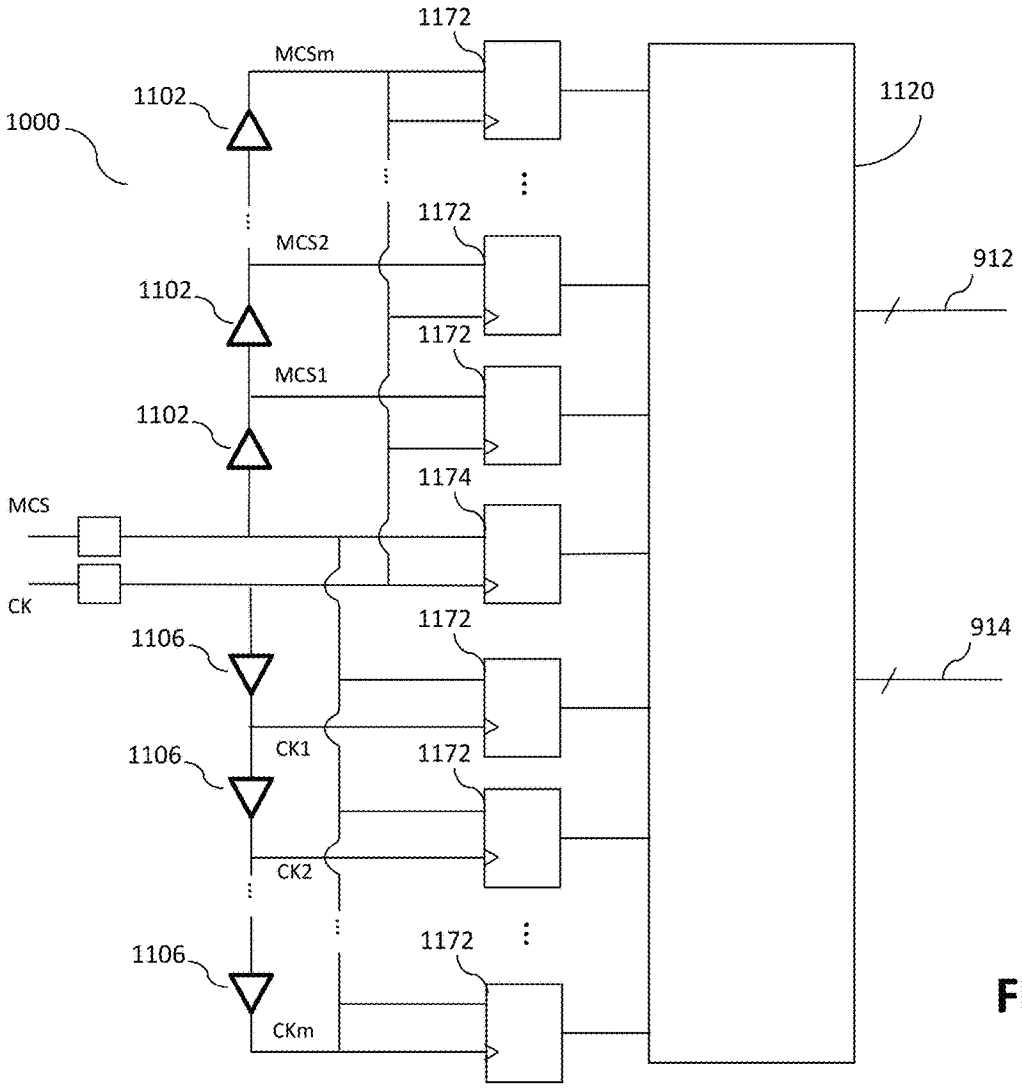
1000
1102
1102
1102
MCSm
MCS2
MCS1
1172
1172
1172
1174
1172
1172
1172
1120
912
914
MCS
CK
1106
1106
1106
CK1
CK2
CKm

FIG. 11A

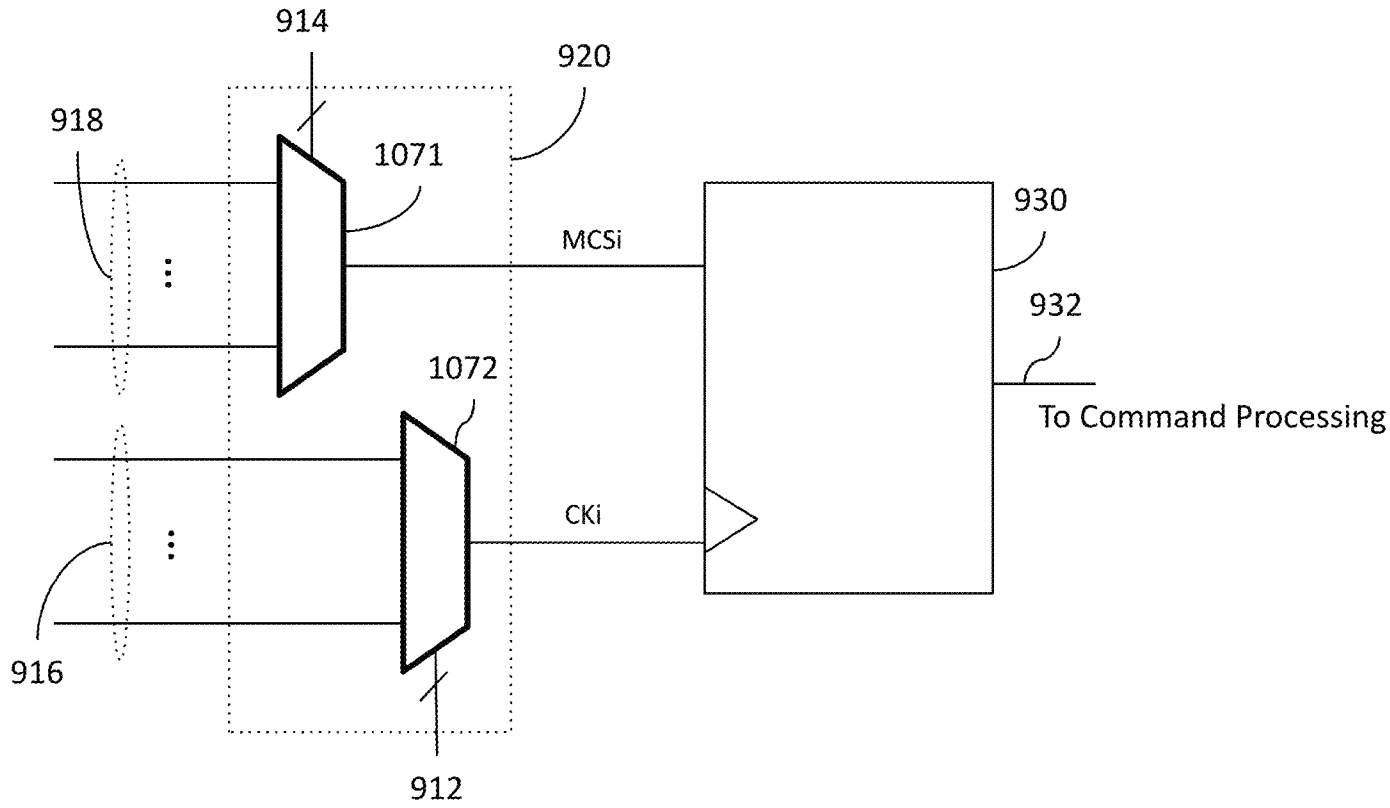
914
920
918
1071
930
MCSi
932
1072
To Command Processing
CKi
916
912

FIG. 11B

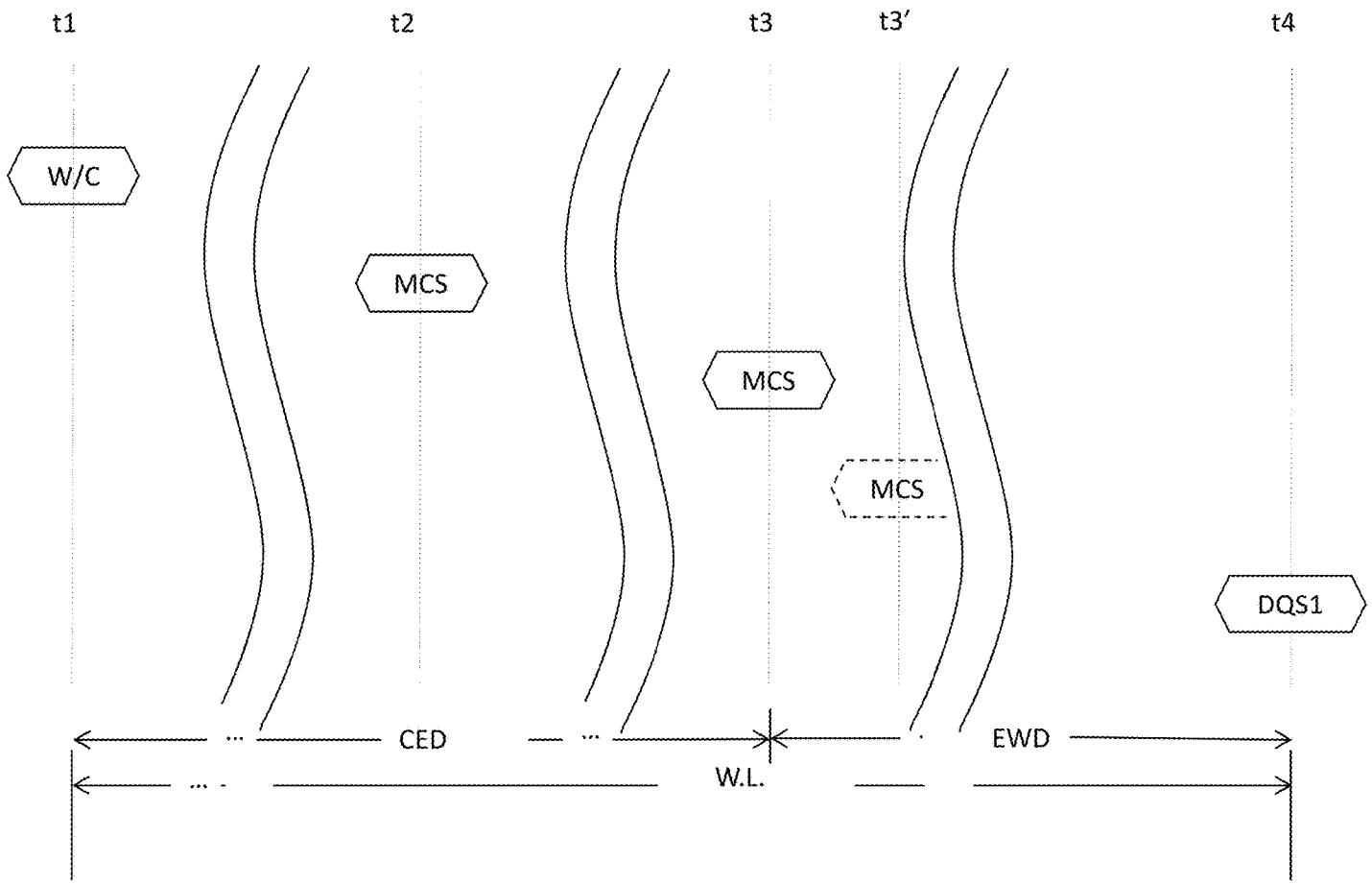

FIG. 12A

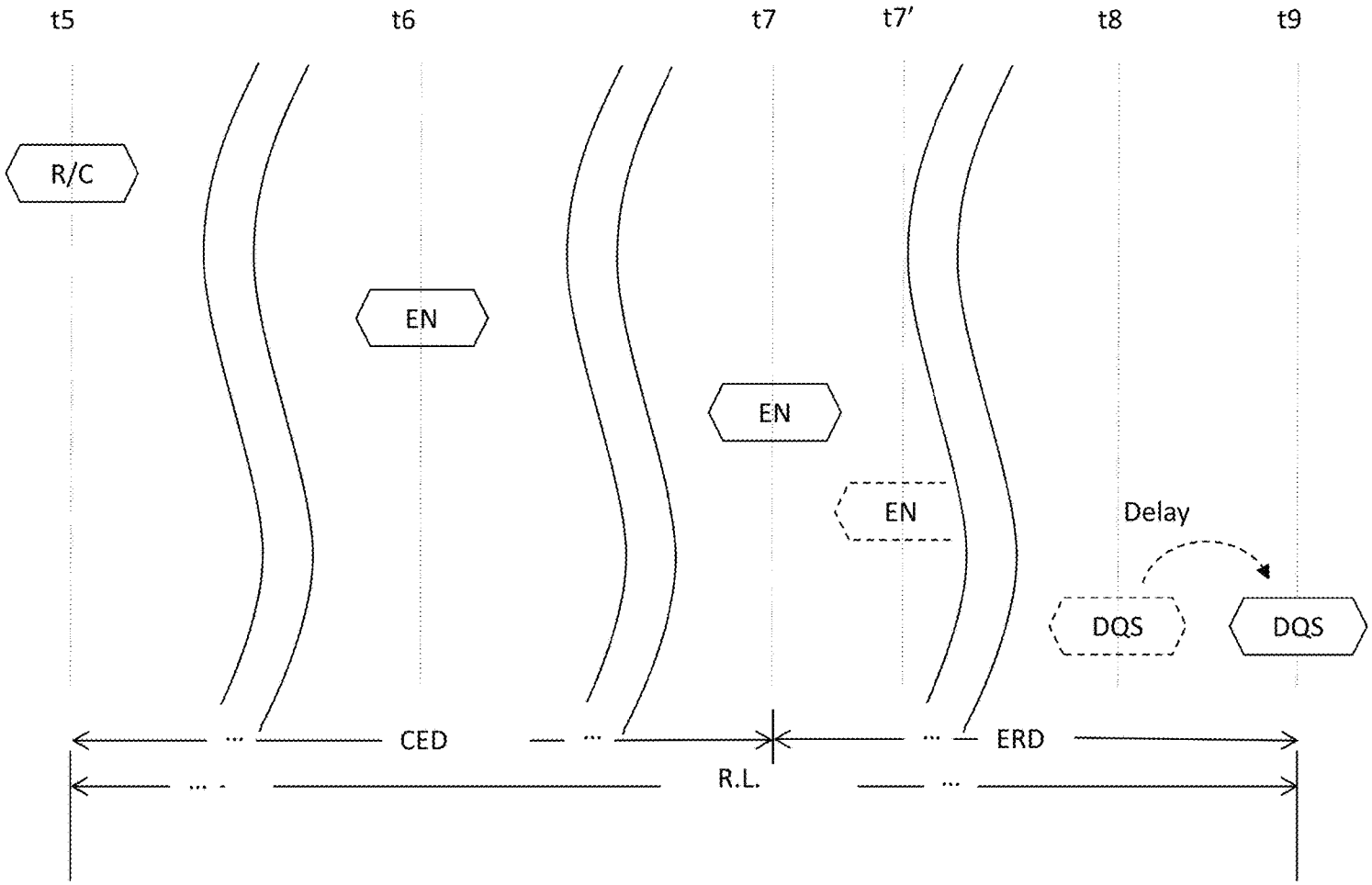

FIG. 12B

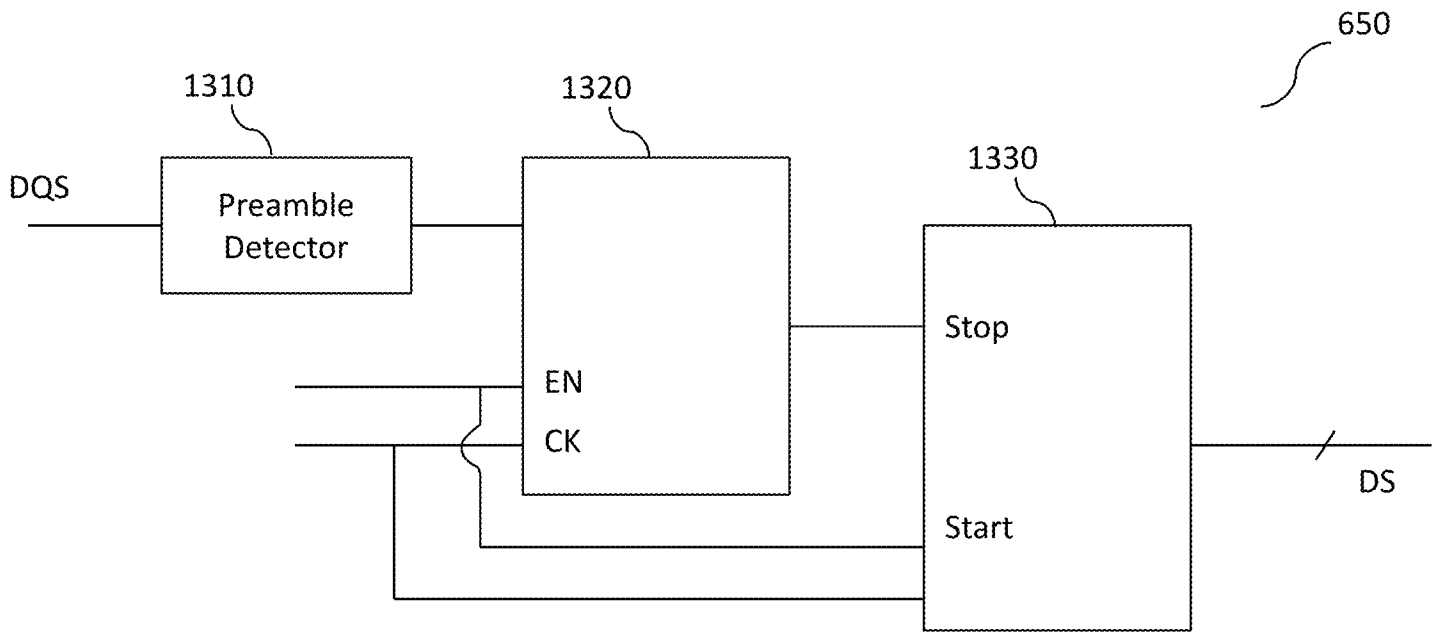

FIG. 13

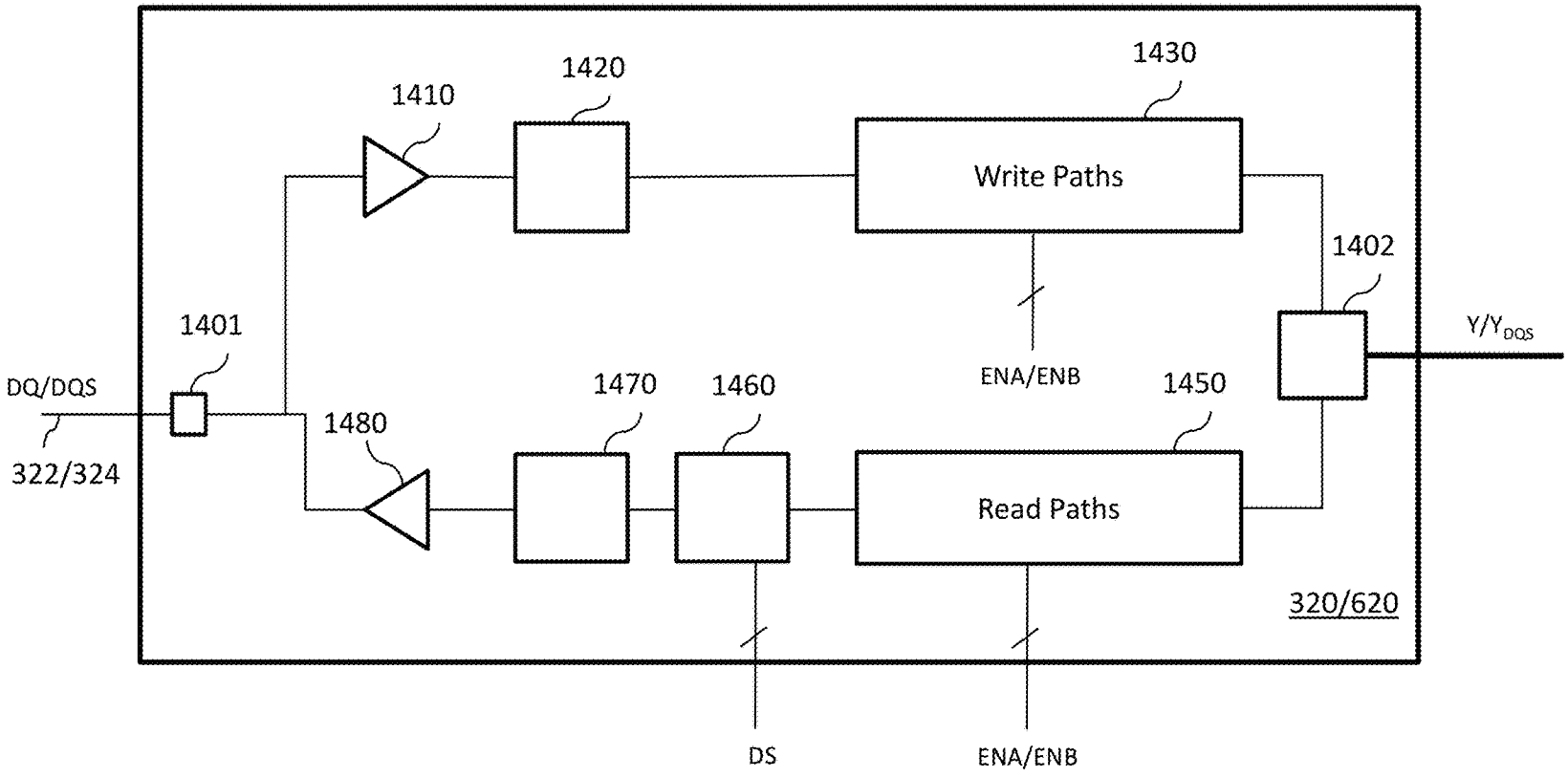
1410
1420
1430
Write Paths
1402
Y/Y_DQS
1401
DQ/DQS
322/324
1480
1470
1460
ENA/ENB
1450
Read Paths
320/620
DS
ENA/ENB

FIG. 14

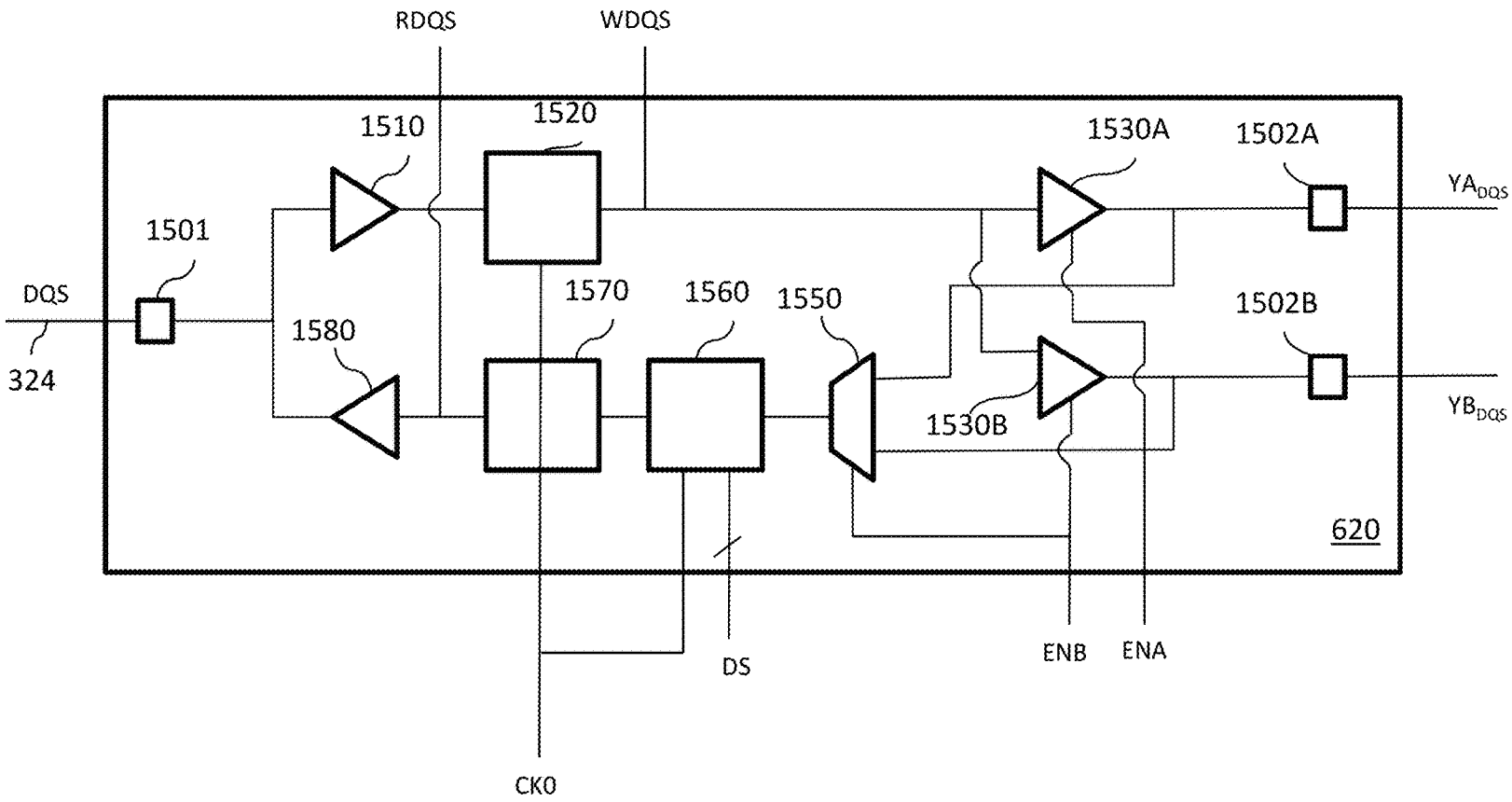
RDQS
WDQS
1510
1520
1530A
1502A
YA$_{DQS}$
1501
DQS
324
1580
1570
1560
1550
1502B
1530B
YB$_{DQS}$
620
DS
ENB
ENA
CK0

FIG. 15

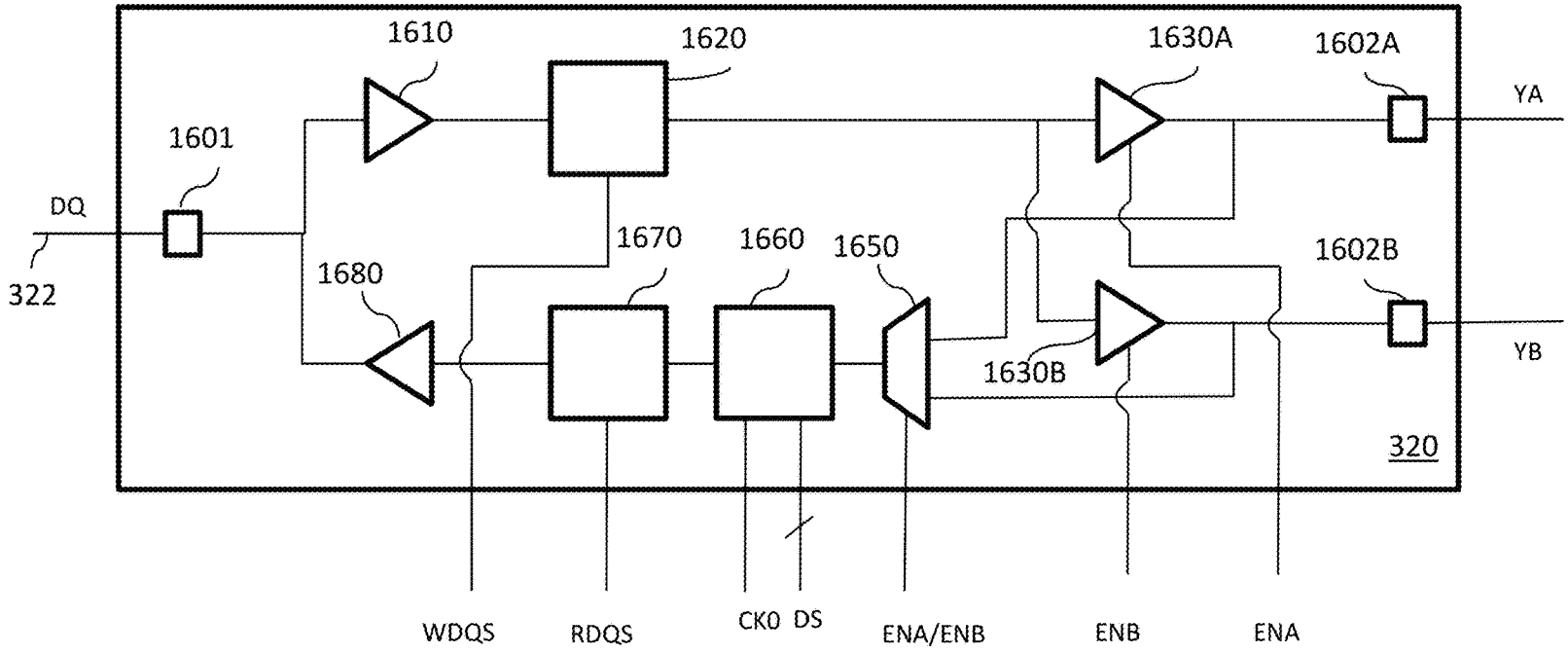
1610
1620
1630A
1602A
YA
1601
DQ
322
1680
1670
1660
1650
1602B
1630B
YB
320
WDQS
RDQS
CK0
DS
ENA/ENB
ENB
ENA

FIG. 16

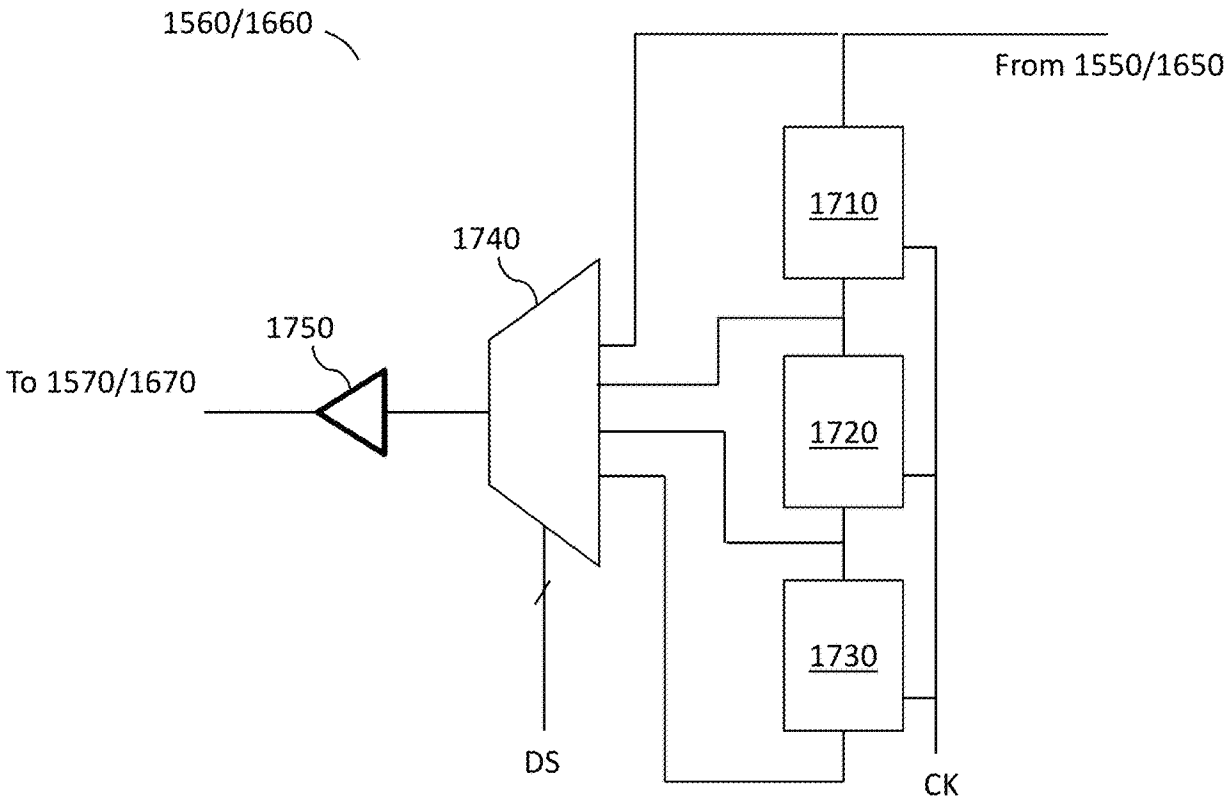
1560/1660
From 1550/1650
1710
1740
1750
To 1570/1670
1720
1730
DS
CK

FIG. 17

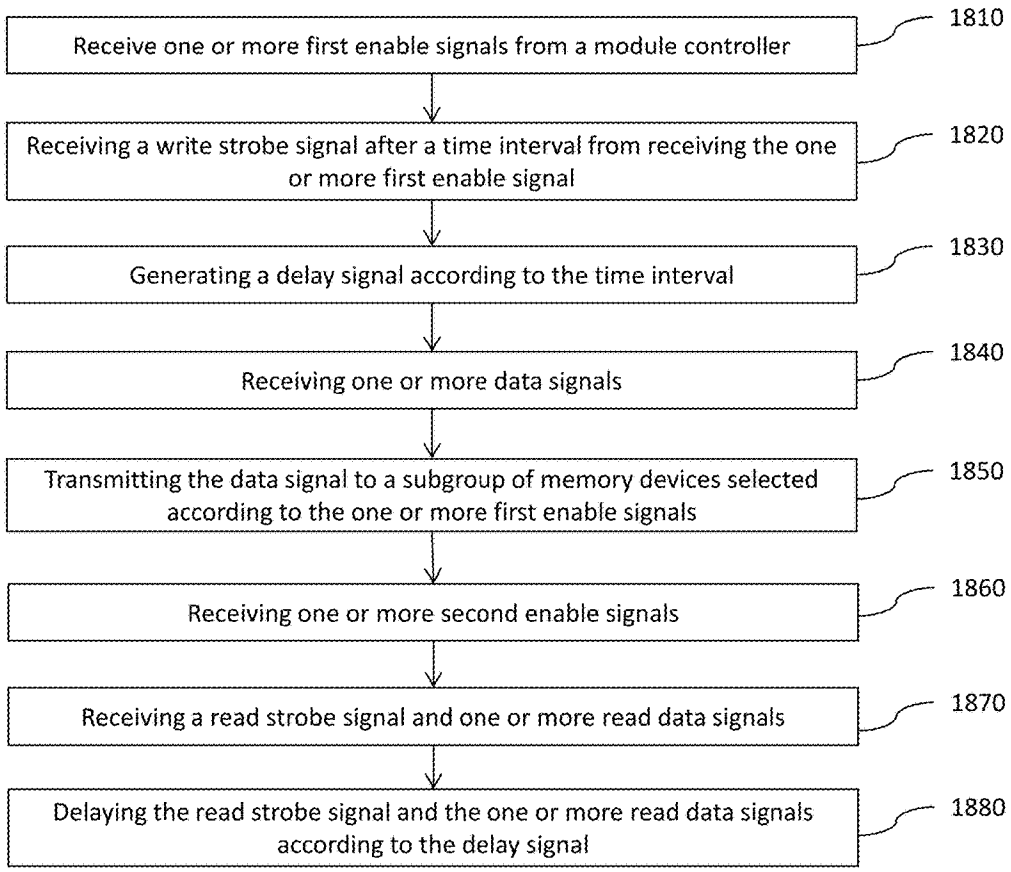
Receive one or more first enable signals from a module controller
1810
Receiving a write strobe signal after a time interval from receiving the one or more first enable signal
1820
Generating a delay signal according to the time interval
1830
Receiving one or more data signals
1840
Transmitting the data signal to a subgroup of memory devices selected according to the one or more first enable signals
1850
Receiving one or more second enable signals
1860
Receiving a read strobe signal and one or more read data signals
1870
Delaying the read strobe signal and the one or more read data signals according to the delay signal
1880

FIG. 18

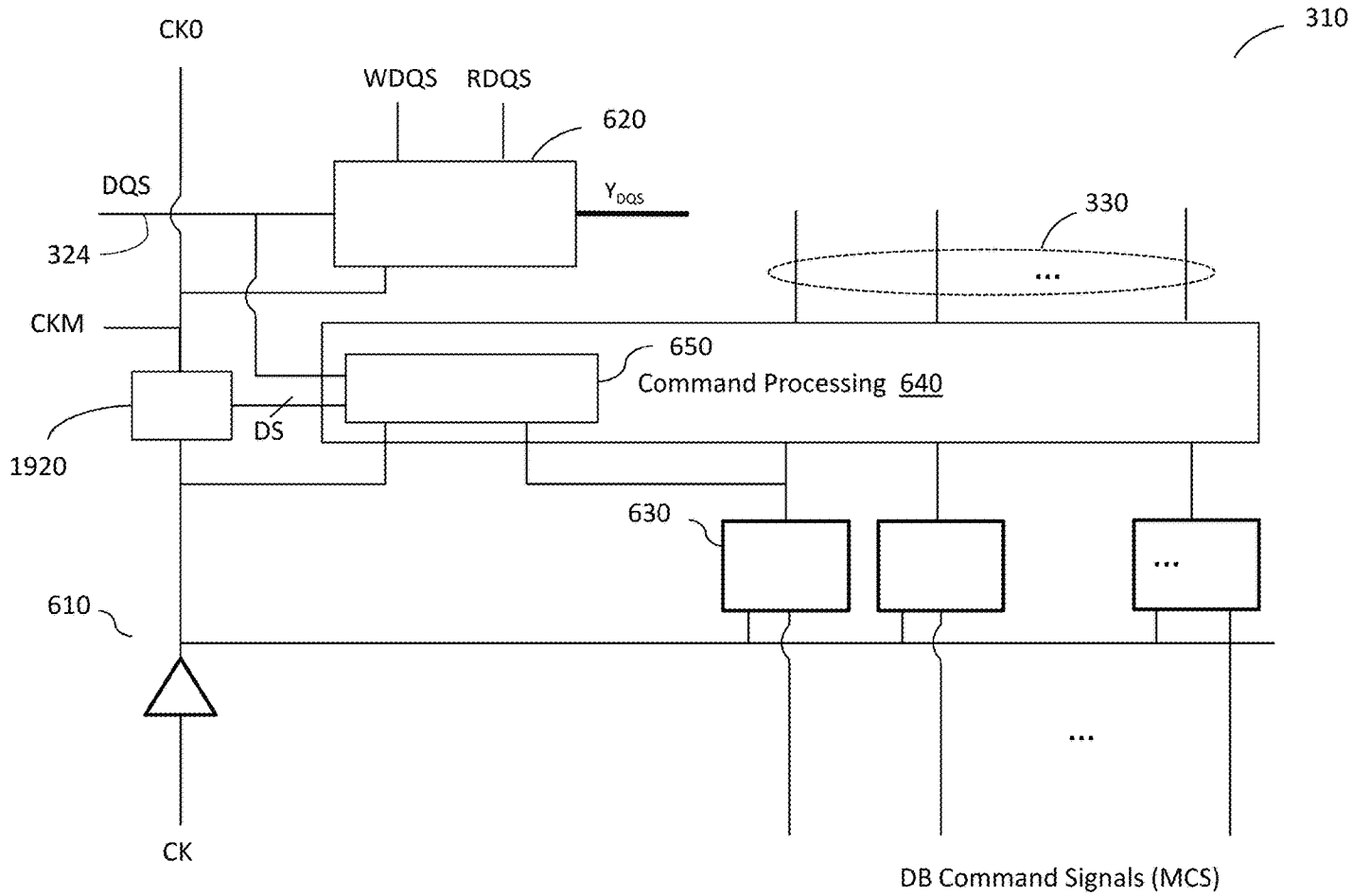
310
CK0
WDQS
RDQS
620
DQS
Y_{DQS}
330
324
CKM
650
Command Processing 640
DS
1920
630
610
CK
DB Command Signals (MCS)

FIG. 19

MEMORY MODULE WITH TIMING-CONTROLLED DATA PATHS IN DISTRIBUTED DATA BUFFERS

CLAIM OF PRIORITY

The present application is a continuation of U.S. patent application Ser. No. 15/426,064, to be issued as U.S. Pat. No. 9,824,035, which is a continuation of U.S. patent application Ser. No. 14/846,993, now U.S. Pat. No. 9,563,587, which is a continuation of U.S. patent application Ser. No. 13/952,599, filed Jul. 27, 2013, issued as U.S. Pat. No. 9,128,632, which claims priority to U.S. Provisional Pat. Appl. No. 61/676,883, filed on Jul. 27, 2012. Each of the above applications is incorporated herein by reference in its entirety.

CROSS REFERENCE TO RELATED APPLICATIONS

The present application is related to commonly-owned U.S. patent application Ser. No. 14/715,486, filed on May 18, 2015; U.S. patent application Ser. No. 13/970,606, filed on Aug. 20, 2013; U.S. patent application Ser. No. 12/504,131, filed on Jul. 16, 2009, now U.S. Pat. No. 8,417,870; U.S. patent application Ser. No. 12/761,179, filed on Apr. 15, 2010, now U.S. Pat. No. 8,516,185; U.S. patent application Ser. No. 13/287,042, filed on Nov. 1, 2011, now U.S. Pat. No. 8,756,364; and U.S. patent application Ser. No. 13/287,081, filed on Nov. 1, 2011, now U.S. Pat. No. 8,516,188; each of which is incorporated herein by reference in its entirety.

FIELD

The disclosure herein is related generally to memory modules, and more particularly to multi-rank memory modules and methods of operation.

BACKGROUND

With recent advancement of information technology and widespread use of the Internet to store and process information, more and more demands are placed on the acquisition, processing, storage and dissemination of vocal, pictorial, textual and numerical information by microelectronics-based combination of computing and communication means. In a typical computer or server system, memory modules are used to store data or information. A memory module usually includes multiple memory devices, such as dynamic random access memory devices (DRAM) or synchronous dynamic random access memory devices (SDRAM), packaged individually or in groups, and/or mounted on a printed circuit board (PCB). A processor or a memory controller accesses the memory module via a memory bus, which, for a single-in-line memory module (SIMM), can have a 32-bit wide data path, or for a dual-in-line memory module (DIMM), can have a 64-bit wide data path.

The memory devices of a memory module are generally organized in ranks, with each rank of memory devices generally having a bit width. For example, a memory module in which each rank of the memory module is 64 bits wide is described as having an "x64" or "by 64" organization. Similarly, a memory module having 72-bit-wide ranks is described as having an "x72" or "by 72" organization.

The memory capacity or memory density of a memory module increases with the number of memory devices on the memory module. The number of memory devices of a memory module can be increased by increasing the number of memory devices per rank or by increasing the number of ranks.

In certain conventional memory modules, the ranks are selected or activated by control signals from a processor or memory controller during operation. Examples of such control signals include, but are not limited to, rank-select signals, also called chip-select signals. Most computer and server systems support a limited number of ranks per memory module, which limits the memory density of the memory modules that can be used in these computer and server systems.

For memory devices in such as a memory module to be properly accessed, distribution of control signals and a control clock signal in the memory module is subject to strict constraints. In some conventional memory modules, control wires are routed so there is an equal length to each memory component, in order to eliminate variation of the timing of the control signals and the control clock signal between different memory devices in the memory modules. The balancing of the length of the wires to each memory devices compromises system performance, limits the number of memory devices, and complicates their connections.

In some conventional memory systems, the memory controllers include leveling mechanisms for write and/or read operations to compensate for unbalanced wire lengths and memory device loading on the memory module. As memory operating speed and memory density continue to increase, however, such leveling mechanisms are also insufficient to insure proper timing of the control and/or data signals received and/or transmitted by the memory modules.

BRIEF DESCRIPTION OF THE DRAWINGS

FIG. **1** is a diagram illustrating a memory system including at least one memory module according to one embodiment.

FIGS. **2**A-**2**D are each a diagrams illustrating interactions among components in a a memory module according to certain embodiments.

FIG. **3** is a diagram illustrating one of a plurality of data buffers in a memory module according to one embodiment.

FIGS. **4**A-**4**B are each a diagram illustrating data and data strobe signal lines coupled to memory devices in a memory module according to certain embodiments.

FIGS. **5**A-**5**B are diagrams illustrating different numbers of memory devices that can be coupled to each data buffer in a memory module according to certain embodiments.

FIG. **6** is a diagram illustrating a control circuit in a data buffer according to certain embodiments.

FIG. **7** is a diagram illustrating control signals from a module control device to a plurality of data buffers in a memory module according to certain embodiments.

FIG. **8** is a timing diagram illustrating alignment of module control signals with respect to module clock signals.

FIG. **9** is a diagram illustrating a metastability detection circuit and signal adjustment circuit in a data buffer according to certain embodiments.

FIGS. **10**A-**10**C are diagrams illustrating a metastability detection circuit according to certain embodiments.

FIG. **10**D is a diagram illustrating a signal adjustment circuit according to certain embodiments.

FIGS. **11**A-**11**B are diagrams illustrating a metastability detection circuit and signal adjustment circuit, respectively, according to certain embodiments.

FIGS. **12**A-**12**B are a timing diagrams illustrating a write operation and a read operation, respectively, performed by a memory module according to one embodiment.

FIG. **13** is a diagram illustrating a delay control circuit in a data buffer according to certain embodiments.

FIG. **14** is a diagram illustrating a DQ or DQS routing circuit in a data buffer according to an embodiment.

FIG. **15** a diagram illustrating a DQS routing circuit having a delay circuit in a data buffer according to an embodiment.

FIG. **16** a diagram illustrating a DQ routing circuit having a delay circuit in a data buffer according to an embodiment.

FIG. **17** is a diagram illustrating a delay circuit in a DQ or DQS routing circuit according to an embodiment.

FIG. **18** is a flowchart illustrating a method for data edge alignment according to embodiments.

FIG. **19** is a diagram illustrating a control circuit in a data buffer according to certain embodiments.

DESCRIPTION OF EMBODIMENTS

A memory module according to one embodiment includes memory devices organized in groups, a module control device, and data buffers (DB). The data buffers are sometimes referred to herein as buffer circuits, isolation devices (I.D.) or load reduction devices. The memory module is operable to perform memory operations in response to memory commands (e.g., read, write, refresh, precharge, etc.), each of which is represented by a set of control/address (C/A) signals transmitted by the memory controller to the memory module. The C/A signals may include, for example, a row address strobe signal (/RAS), a column address strobe signal (/CAS), a write enable signal (/WE), an output enable signal (/OE), one or more chip select signals, row/column address signals, and bank address signals. The memory controller may also transmit a system clock signal to the memory module. In one embodiment, the C/A signals and the system clock signal are received by the module control device, which generates a set of module command signals and a set of module control signals in response to each memory command from the memory controller. The module command signals are transmitted by the module control device to the memory devices via module C/A signal lines, and the module control signals (referred sometimes herein as module control signals) are transmitted by the module control device to the buffer circuits via module control signal lines.

The buffer circuits are associated with respective groups of memory devices and are distributed across the memory module at positions corresponding to the respective groups of memory devices. Thus, during certain high speed operations, each module control signal may arrive at different buffer circuits at different points of time across more than one clock cycle of the system clock. Also, each buffer circuit associated with a respective group of memory devices is in the data paths between the respective group of memory devices and the memory controller. Thus, the memory controller does not have direct control of the memory devices. In one embodiment, each group of memory devices include at least two subgroups, each subgroup including at least one memory device. Each buffer circuit is configured to select a subgroup in the respective group of memory devices to communicate data with the memory controller in response to the module control signals. Thus, the memory module can have more ranks of memory devices than what is supported by the memory controller.

In one embodiment, each buffer circuit includes metastability detection circuits to detect metastability condition in the module control signals and signal adjustment circuits to adjust the module control signals and/or a module clock signal to mitigate any metastability condition in the module control signals.

Further, in one embodiment, each buffer circuit includes signal alignment circuits that determine, during a write operation, a time interval between a time when one or more module control signals are received from the module control circuit and a time when a strobe or data signal is received from the memory controller. This time interval is used during a subsequent read operation to time transmission of read data to the memory controller, such that the read data arrives at the memory controller within a time limit in accordance with a read latency parameter associated with the memory system.

FIG. **1** shows a system **100** including a memory controller (MCH) **101** and one or more memory modules **110** coupled to the MCH by a memory bus **105**, according to one embodiment. As shown, the memory bus includes C/A signal lines **120** and groups of system data/strobe signal lines **130**. Also as shown, each memory module **110** has a plurality of memory devices **112** organized in a plurality of ranks **114**. Each memory module **110** further includes a module control circuit (module controller or module control device) **116** coupled to the MCH **101** via the C/A signal lines **120**, and a plurality of buffer circuits or isolation devices **118** coupled to the MCH **101** via respective groups of system data/strobe signal lines **130**. In one embodiment, the memory devices **112**, the module control circuit **116** and the isolation devices **118** can be mounted on a same side or different sides of a printed circuit board (module board) **119**.

In the context of the present description, a rank refers to a set of memory devices that are selectable by a same chip select signal from the memory controller. The number of ranks of memory devices in a memory module **110** may vary. For example, as shown, each memory module **110** may include four ranks of memory devices **112**. In another embodiment, the memory module **110** may include 2 ranks of memory devices. In yet another embodiment, the memory module may include six or more ranks of memory devices **112**.

In the context of the present description, a memory controller refers to any device capable of sending instructions or commands, or otherwise controlling the memory devices **112**. Additionally, in the context of the present description, a memory bus refers to any component, connection, or groups of components and/or connections, used to provide electrical communication between a memory module and a memory controller. For example, in various embodiments, the memory bus **105** may include printed circuit board (PCB) transmission lines, module connectors, component packages, sockets, and/or any other components or connections that provide connections for signal transmission.

Furthermore, the memory devices **112** may include any type of memory devices. For example, in one embodiment, the memory devices **112** may include dynamic random access memory (DRAM) devices. Additionally, in one embodiment, each memory module **110** may include a dual in-line memory module (DIMM).

Referring to FIG. **2**A, which illustrates one memory module **110** according to an embodiment, the module control device **116** receives system memory commands repre-

sented by a set of system control/address (C/A) signals from the MCH **101** via signal lines **120** and generates module command signals and module control signals based on memory commands from the system. The module control device **116** also received a system clock MCK and generates a module clock signal CK in response to the system clock signal MCK. The MCK signal may include a pair of complementary clock signals, MCK and $\overline{MCK}$, and the module clock signal may include a pair of complementary clock signals CK and $\overline{CK}$.

Examples of the system C/A signals include, but are not limited to, Chip Select (or /CS) signal, which is used to select a rank of memory devices to be accessed during a memory (read or write) operation; Row Address Strobe (or /RAS) signal, which is used mostly to latch a row address and to initiate a memory cycle; Column Address Strove (or /CAS) signal, which is used mostly to latch a column address and to initiate a read or write operation; address signals, including bank address signals and row/column address signals, which are used to select a memory location on a memory device or chip; Write Enable (or /WE) signal, which is used to specify a read operation or a write operation, Output Enable (or /OE) signal, which is used to prevent data from appearing at the output until needed during a read operation, and the system clock signal MCK.

Examples of module command signals include, but are not limited to module /CS signals, which can be derived from the system /CS signals and one or more other system C/A signals, such as one or more bank address signals and/or one or more row/column address signals; a module /RAS signal, which can be, for example, a registered version of the system /RAS signal; a module /CAS signal, which can be, for example, a registered version of the system /CAS signal; module address signals, which can be, for example, registered versions of some or all of the address signals; a module /WE signal, which can be, for example, a registered version of the system /WE signal; a module /OE signal, which can be, for example a registered version of the system /OE signal. In certain embodiments, the module command signals may also include the module clock signal CK.

Examples of module control signals include, but are not limited to a mode signal (MODE), which specifies a mode of operation (e.g., test mode or operating mode) for the isolation devices **118**; one or more enable signals, which are used by an isolation device to select one or more subgroups of memory devices to communicate data with the memory controller; and one or more ODT signals, which are used by the isolation devices to set up on-die termination for the data/strobe signals. In one embodiment, the module control signals are transmitted to the isolation devices **118** via respective module control signal lines **230**. Alternatively, the module control signals can be packetized before being transmitted to the isolation devices **118** via the module control signal lines and decoded/processed at the isolation devices.

Module control device **116** transmits the module command signals to the memory devices **112** via module C/A signal lines **220**. The memory devices **112** operate in response to the module command signals to receive write data or output read data as if the module command signals were from a memory controller. The module control device transmits the module control signals together with the module clock signal CK to the isolation devices **118** via module control signal lines **230**. As shown in FIG. **2**, at least some of the memory devices in a same rank share a same set of module C/A signal lines **220**, and at least some of the isolation devices **118** share a same set of module control signal lines **230**.

As shown n FIGS. **2**A and **2**B, each rank **114** includes N memory devices, where N is an integer larger than one. For example, a first rank includes memory devices M_{11}, . . . , M_{i1}, $M_{i+1,1}$, . . . , M_N, a second rank includes memory devices M_{12}, . . . , M_{i2}, $M_{i+1,2}$, . . . , $M_{N,2}$, and so on. In one embodiment, the memory devices **112** are also organized in groups or sets, with each group corresponding to a respective group of system data/strobe signal lines **130** and including at least one memory device from each rank. For example, memory devices M_{11}, M_{12}, M_{13}, and M_{14} form a first group of memory devices, memory devices M_{i1}, M_{i2}, M_{i3}, and M_{i4} form an ith group of memory devices, and so on.

As shown, the isolation devices **118** are associated with respective groups of memory devices and are coupled between respective groups of system data/strobe signal lines **130** and the respective groups of memory devices. For example, isolation device ID-**1** among the isolation devices **118** is associated with the first group of memory devices M_{11}, M_{12}, M_{13}, and M_{14} and is coupled between the group of system data/strobe signal lines **130-1** and the first group of memory devices, isolation devices ID-i among the isolation devices **118** is associated with the ith group of memory devices M_{i1}, M_{i2}, M_{i3}, and M_{i4} and is coupled between the group of system data/strobe signal lines **130**-*i* and the ith group of memory devices, and so on.

In one embodiment, each group or sets of memory devices are coupled to the associated isolation device **118** via a set of module data/strobe lines **210**. Each group or set of memory devices is organized in subgroups or subsets, with each subgroup or subset including at least one memory device. The subgroups in a group of memory devices may be coupled to the associated isolation device **118** via a same set of module data/strobe lines **210** (as shown in FIG. **2**A) or via respective subsets of module data/strobe lines **210** (as shown in FIG. **2**B). For example, as shown in FIG. **2**B, in the first group of memory devices, memory devices M_{11} and/or M_{13} form a first subgroup, and memory devices M_{12} and/or M_{14} form a second subgroup; in the ith group of memory devices, memory devices M_{i1} and/or M_{i3} form a first subgroup, and memory devices M_{i2} and/or M_{i4} form a second subgroup; and so on. The first subgroup of at least one memory device in each group of memory devices is coupled to the associated isolation device **118** via an associated first subset of module data/strobe lines YA, and the second subgroup of at least one memory device in each group of memory devices is coupled to the associated isolation device via an associated second subset of module data/strobe lines YB, as shown. For example, memory devices M_{11} and/or M_{13} form the first subgroup are/is coupled to the isolation device ID-**1** via the corresponding first subset of module data/strobe lines YA-**1**, and memory devices M_{12} and/or M_{14} form the second subgroup are/is coupled to the isolation device ID-**1** via the corresponding second subset of module data/strobe lines YA-**2**.

In one embodiment, the isolation devices **118** are in the data paths between the MCH **101** and the memory module **110** and include data buffers between the MCH **101** and the respective groups of memory devices. In one embodiment, each isolation device **118** is configured to select a subgroup in the respective group of memory devices to communicate data with the MCH **101** in response to the module control signals, such that the memory module can include more ranks than what is supported by the MCH **101**. Further, each

isolation devices **118** is configured to isolate unselected subgroup(s) of memory devices from the MCH **101** during write operations, so that the MCH sees a load on each data line that is less than a load associated with the respective group of memory devices. In one embodiment, the MCH sees only a load associated with one memory device on each data/strobe signal line during write operations.

In one embodiment, the isolation devices **118** are distributed across the memory module **110** or the module board **119** in positions corresponding to the respective groups of memory devices. For example, isolation device ID-**1** is disposed in a first position corresponding to the first group of memory devices M_{11}, M_{12}, M_{13}, and M_{14}, and isolation device ID-i is disposed in an ith position separate from the first position and corresponding to the ith group of memory devices M_{i1}, M_{i2}, M_{i3}, and M_{i4}. In one embodiment, the first position is between the first group of memory devices and an edge **201** of the module board **119** where connections (not shown) to the data/strobe signal lines **130** are placed, and i^{th} position is between the ith group of memory devices and the edge **201** of the module board **119**. In one embodiment, the isolation devices **118** are distributed along the edge **201** of the memory module **110**. In one embodiment, each isolation device **118** is a separate integrated circuit device packaged either by itself or together with at least some of the respective group of memory devices. In one embodiment, the module data/strobe signal lines **210**, the module C/A signal lines **220**, and the module control signal lines **230** include signal traces formed on and/or in the module board **119**.

As an option, memory module **110** may further include a serial-presence detect (SPD) device **240**, which may include electrically erasable programmable read-only memory (EEPROM) for storing data that characterize various attributes of the memory module **110**. Examples of such data include a number of row addresses, a number of column addresses, a data width of the memory devices, a number of ranks on the memory module **110**, a memory density per rank, a number of memory device on the memory module **110**, and a memory density per memory device, etc. A basic input/output system (BIOS) of system **100** can be informed of these attributes of the memory module **110** by reading from the SPD **240** and can use such data to configure the MCH **101** properly for maximum reliability and performance.

In certain embodiments, the SPD **240** and/or the control circuit **116** store module configuration information, such as: memory space translation code, memory address mapping function code, input and output signals timing control information for the control circuit **116**, input and output signals electrical and logical level control information for the control circuit **116**, etc. In certain embodiments, the SPD **240** contains a system view of the module **110** which can be different from an actual physical construction of the module **110**. For example, the SPD **240** stores at least one memory operation parameter that is different from a corresponding memory operation parameter in a system memory controller setting. The SPD **240** may also store at least on data buffer operation parameter that is different from a corresponding parameter in the system memory controller setting.

Thus, in certain embodiment, in the memory module **110**, C/A signals representing a memory command are received and buffered by the module control circuit **116**, so that the MCH sees only the module control circuit **116** as far as the C/A signals are concerned. Write data and strobe signals from the controller are received and buffered by the isolation devices **118** before being transmitted to the memory devices **112** by the isolation devices **118**. On the other hand, read data and strobe signals from the memory devices are received and buffered by the isolation devices before being transmitted to the MCH via the system data/strobe signal lines **130**. Thus, MCH **101** does not directly operate or control the memory devices **112**. As far as data/strobe signals are concerned, the MCH **101** mainly sees the isolation devices **118**, and the system **100** depends on the isolation devices **118** to properly time the transmission of the read data and strobe signals to the MCH **101**.

In certain embodiments, the memory module **110** is a dual in-line memory module (DIMM) and the memory devices are double data rate (DDR) dynamic random access memory devices (DRAM). In certain embodiments, the control circuit **116** includes a DDR register, and logic for memory space translation between a system memory domain and a module level physical memory domain. Such translation may produce address mapping, proper interface timing for the control signals to the module level physical memory domain, and a proper interface electrical and logical level for the control signals to the module level physical memory domain.

As shown in FIG. **2**C, in certain embodiments, the control circuit **116** transmits registered C/A and clock signals to the memory devices **112**, and transmits module control signals and a registered clock signal (or module clock signal) to the isolation devices **118**, in a fly-by configuration. As the speed of memory operations increase, issues can arise with respect to signal alignment for input, output delay variation due process, voltage and temperature (PVT) variations, synchronization with system memory controller interface, and phase drift accumulation during operation, etc. Electrical interface calibration drift during operation due to charge build up and timing interface calibration drift during operation due to environment change can also create issues.

For example, load reduction mechanism in the isolation devices **118** would provide a single data bus interface to the respective set of memory devices, which is hidden from the system memory controller **101**. Thus, a long sequence of interface timing training may be required due to limited controllability of the system memory controller **101** over the interface between the memory devices **112** and the associated isolation devices **118**. Furthermore, interface signal alignment-drift after the initial training would not be easily detected by the system memory controller **101**, which may cause silent system failure.

Moreover, clock skew amongst the memory devices **112** and the associated isolation devices **118** due to the distributed architecture of the memory module **110** can cause synchronization issues. As the speed of memory operation increase, data period can become very close to the signal propagation delay time. Thus, such issues cannot simply be addressed by pipelining the data paths, as variation of the signal propagation time through I/Os becomes a very significant portion of a data period.

To address at least some of the above issues, in certain embodiments, as shown in FIG. **2**D, the control circuit **116** transmits registered C/A signals to the memory devices **112**, and transmits the module control signals and the module clock signal to the data buffers **118**, in a fly-by arrangement. The memory devices **112** do not receive the module clock signal from the control circuit **116**. Instead, each data buffer **118** regenerates the clock that is used by the respective set of memory devices **112**. Each Data buffer **118** is thus responsible for providing a correct data timing interface between the respective set of memory devices **112** and the system memory controller **101**. Each data buffer **118** is also

responsible for providing the correct control signal timing between the control circuit **116** and the respective set of memory devices **112**.

Thus, the memory module **110** in FIG. **2**D allows a locally synchronized operation for each respective set of memory devices **112**, which can correspond to a nibble or a byte of a DDR data bus between the memory module **110** and the system memory controller **101**. Also, signal interface between each data buffer **118** and the respective set of memory devices **112** can be synchronized. In one embodiment, each data buffer **118** has a set of configurable operations, including, for example: programmable phase relationship between the clock it receives and the clock it regenerates, programmable phase adjustment for the data and data-strobe signals coupled to the memory devices **112**, programmable phase adjustment for the data and data-strobe signals coupled to the system memory controller **101**, programmable phase adjustment related to at least one control signal that is coupled to the control circuit **116**. The locally synchronized operation also makes it easier for each data buffer **118** to perform self-testing of the associated set of memory devices **112**, independent of the self-testing of other sets of memory devices performed by the other data buffers, as disclosed in commonly-owned U.S. Pat. No. 8,001,434, entitled "Memory Board with Self-Testing Capability," which is incorporated herein by reference in its entirety.

In certain embodiments, operations of the isolation devices **118** are controlled by the module control signals from the module control circuit **116**, which generates the module control signals according to the C/A signals received from the MCH. Thus, the module control signals need to be properly received by the isolation devices **118** to insure their proper operation. In one embodiment, the module control signals are transmitted together with the module clock signal CK, which is also generated by the module control circuit **116** based on the system clock signal MCK. The isolation circuits **118** buffers the module clock signal, which is used to time the sampling of the module control signals. Since the isolation devices **118** are distributed across the memory module, the module control signal lines **230** can stretch across the memory module **110**, over a distance of several centimeters. As the module control signals travel over such a distance, they can become misaligned with the module clock signal, resulting in metastability in the received module control signals. Therefore, in one embodiment, the isolation circuits **118** includes metastability detection circuits to detect metastability condition in the module control signals and signal adjustment circuits to adjust the module control signals and/or the module clock signal to mitigate any metastability condition in the module control signals, as explained in further detail below.

Because the isolation devices **118** are distributed across the memory module **110**, during high speed operations, it may take more than one clock cycle time of the system clock MCK for the module control signals to travel along the module control signals lines **230** from the module control device **116** to the farthest positioned isolation devices **118**, such as isolation device ID-**1** and isolation device ID-(n-**1**) in the exemplary configuration shown in FIG. **2**. In other words, a same set of module control signals may reach different isolation devices **118** at different times across more than one clock cycle of the system clock. For example, when the clock frequency of the system clock is higher than 800 MHz, the clock cycle time is less than about 1.2 ns. With a signal travel speed of about 70 ps per centimeter of signal line, a module control signal would travel about 15 cm during one clock cycle. When the clock frequency increases to 1600 MHz, a module control signal would travel less than 8 cm during one clock cycle. Thus, a module control signal line can have multiple module control signals on the line at the same time, i.e., before one module control signal reaches an end of the signal line, another module control signal appear on the signal line.

With the isolation devices **118** receiving module control signals at different times across more than one clock cycle, the module control signals alone are not sufficient to time the transmission of read data signals to the MCH **101** from the isolation devices **118**. In one embodiment, each isolation devices includes signal alignment circuits that determine, during a write operation, a time interval between a time when one or more module control signals are received from the module control circuit **116** and a time when a write strobe or write data signal is received from the MCH **101**. This time interval is used during a subsequent read operation to time the transmission of read data to the MCH **101**, such that the read data follows a read command by a read latency value associated with the system **100**, as explained in more detail below.

More illustrative information will now be set forth regarding various optional configurations, architectures, and features with which the foregoing framework may or may not be implemented, per the desires of the user. It should be strongly noted that the following information is set forth for illustrative purposes and should not be construed as limiting in any manner. Any of the following features may be optionally incorporated with or without the exclusion of other features described.

In one embodiment, as shown in FIG. **3**, each group of signal lines **130** include a set of n data (DQ) signal lines **322** each for transmitting one of a set of data signals DQ_0, $DQ_1, \ldots, DQ_{n-1}$, and at least one strobe (DQS) signal line **324** for transmitting at least one strobe signal DQS. Each set of module data/strobe lines Y include a set of n module data signal lines $Y_0, Y_1, \ldots, Y_{n-1}$ and at least one module strobe signal line Y_{DQS}. When the subsets of memory devices are coupled to the associated isolation device **118** via respective subsets of memory devices, each set of module data/strobe lines Y may include multiple subsets of module data/strobe lines, such as the subsets of module data/strobe lines YA and YB shown in FIG. **2**B. Each subset of module data/strobe lines YA include a set of n first module data lines YA_0, $YA_1, \ldots, YA_n$ and at least one first module strobe signal line YA_{DQS}; and each subset of module data/strobe lines YB include a set of n second module data lines YB_0, $YB_1, \ldots, YB_n$ and at least one second module strobe signal line YB_{DQS}.

Each isolation device **118** includes a set of DQ routing circuits **320** coupled on one side to respective ones of the set of n DQ signal lines **322**, and on another side to respective ones of the respective set of n module data lines, or respective ones of the respective subsets of module data lines, such as the first module data lines $YA_0, YA_1, \ldots, YA_n$ and the second module data lines $YB_0, YB_1, \ldots, YB_n$. Each isolation device **118** further includes an ID control circuit **310** coupled on one side to the at least one DQS signal line **324**, on another side to the one or more module strobe signal lines Y_{DQS}, or the first module strobe signal line YA_{DQS} and second module strobe signal line YB_{DQS}. The ID control circuit **310** also receives the module clock signal CK and the module control signals via the module control signal lines **230**, and outputs ID control signals **330** to the DQ routing circuits **320**, including, for example, one or more enable signals ENA and/or ENB, and some or all of the other received, decoded, and/or otherwise processed module con-

trol signals, a delay signal DS, a read DQS signal RDQS, a write DQS signal WDQS, and a buffer clock signal CK**0**. Each DQ routing circuit **320** is configured to enable data communication between the respective DQ signal line **322** with a selected subgroup of one or more memory devices in response to the module control signals, as explained in more detail below.

In certain embodiments, the ID control circuit **310** also provides a delay signal DS, which is used by the DQ routing circuits **320** to align read data output by the isolation device **118** with read data output by the other isolation devices **118**, as explained in further detail below. In certain embodiments, the ID control circuit **310** regenerates a clock signal from the module clock signal CK, which can have a programmable delay from the module clock signal. The regenerated clock signal is used as the clock signal CK**0** and a clock signal CKM that is provided to the corresponding set of memory devices, as explained in more detail below.

The memory devices **112** are coupled to the isolation devices **118** via a same set of module data/strobe signal lines or different subsets of module data/strobe signal lines. For example, as shown in FIG. **4**A, memory devices M_{11}, M_{12}, M_{13}, and M_{14} in the first group of memory devices can be coupled to the isolation device ID-**1** via a same set of module data lines Y-$\mathbf{1}_0$, Y-$\mathbf{1}_1$, . . . , Y-$\mathbf{1}_{n-1}$ and module strobe line Y-$\mathbf{1}_{DQS}$. In such embodiment, a subgroup in the group of memory devices can be selected by the isolation devices to communicated data with the MCH based on the phases of the data/strobe signals, which can be different with respect to different subgroups of memory devices.

Alternatively, as shown in FIG. **4**B, memory devices M_{11} and M_{13}, which form a subgroup in the first group of memory devices, are coupled to the isolation device ID-**1** via the module data lines YA-$\mathbf{1}_0$, YA-$\mathbf{1}_1$, . . . , YA-$\mathbf{1}_n$ and module strobe line YA-$\mathbf{1}_{DQS}$ and memory devices M_{12} and M_{14}, which form another subgroup in the first group of memory devices, are coupled to the isolation device ID-**1** via the module data lines YB-$\mathbf{1}_0$, YB-$\mathbf{1}_1$, . . . , YB-$\mathbf{1}_n$ and module strobe line YB-$\mathbf{1}_{DQS}$. Memory devices coupled to the same isolation devices can be disposed on a same side or different sides of the memory board **119**. Memory devices coupled to the same isolation devices may be placed side by side, on opposite sides of the module boards **119**, or stacked over each other, and/or over the associated isolation device.

Multiple memory devices having a data width that is less than a data width of the isolation devices **118** may be used in place of one of the memory devices **112**, which has the same data width as that of the isolation devices. For example, as shown in FIG. **5**A, two memory devices M_{11-1} and M_{11-2} may be used in place of the memory device M_{11}. Each of the two memory devices M_{11-1} and M_{11-2} has a data width of 4, and together they act like a memory device M_{11} of a data width of 8. Thus, memory device M_{11-1} is coupled to the isolation device ID-**1** via module data lines YA-$\mathbf{1}_0$, . . . , YA-$\mathbf{1}_3$ and module strobe line YA-$\mathbf{1}_{DQS-1}$ while memory circuit M_{11-2} is coupled to the isolation device ID-**1** via module data lines YA-$\mathbf{1}_4$, . . . , YA-$\mathbf{1}_7$ and module strobe line YA-$\mathbf{1}_{DQS-2}$.

In another embodiment, as shown in FIG. **5**B, four memory devices M_{11-1} to M_{11-4} may be used as the memory device M_{11}. Each of the four memory devices M_{11-1} to M_{11-4} has a data width of 4, and together they act like a memory device M_{11} of a data width of 16. Thus, memory device M_{11-1} is coupled to the isolation device ID-**1** via module data lines YA-$\mathbf{1}_0$, . . . , YA-$\mathbf{1}_3$ and module strobe line YA-$\mathbf{1}_{DQS-1}$ while memory device M_{11-2} is coupled to the isolation device ID-**1** via module data lines YA-$\mathbf{1}_4$, . . . , YA-$\mathbf{1}_7$ and module strobe line YA-$\mathbf{1}_{DQS-2}$, and so on.

FIG. **6** illustrates the ID control circuit **310** in an isolation device **118**. As shown, the ID control circuit **310** includes a clock buffer **610** to receive the module clock signal CK from the module control device **116**, and to output a module clock signal CK**0**. The ID control circuit **310** further includes a strobe routing circuit **620** that are coupled on one side to the corresponding system DQS signal line **324** and on another side to the corresponding module DQS signal lines YA_{DQS} and YB_{DQS}. The ID control circuit **310** further includes a receiver circuit **630** with respect to each of at least some of the module control signals (MCS) to receive a respective one of the module control signals. The ID control circuit **310** further includes a command processing circuit **640** that provides the received, decoded, and/or otherwise processed module control signals **330** to the DQ routing circuits **320** and the strobe routing circuit **620** either directly or after further processing, if needed. The received/decoded/processed module control signals may include, for example, one or more enable signals ENA and/or ENB that are used by the DQ routing circuits **320** and the strobe routing circuit **620** to selectively enabling data communication between the MCH **101** and one of the subgroups in the respective group of memory devices, with which the isolation device is associated.

The strobe routing circuit **620** also buffers strobe signals received from either the MCH **101** or the memory devices **112**, and output either a write strobe WDQS or read strobe RDQS to the DQ routing circuits **320**. In one embodiment, the ID control circuit **310** further includes a delay control circuit **650** that receives one of the module control signals and either a data signal or a strobe signal and determines a delay amount to be used by the DQ routing circuit **320** and the strobe routing circuit **620**. The delay amount is provided to the DQ routing circuit **320** and the strobe routing circuit in a delay signal DS.

In a receiver circuit **630**, the respective MCS is received in accordance with the module clock signal CK**0**. In one embodiment, receiver circuit **630** samples the respective MCS using rising (or falling) edges of the module clock CK**0**. Since the isolation devices **118** are distributed across the memory module **110** at positions corresponding to the respective groups of memory devices, the module control signal lines **230** that carry the MCS to the isolation devices can stretch over a distance of more than 10 centimeters, as shown in FIG. **7**. As the MCS and CK**0** travel along their respective module control signal lines **710** and **720**, they can become misaligned with each other when they reach the input pins **730** of an isolation device **118**.

For example, a module control signal, like the MCS **810** shown in FIG. **8**, can be perfectly aligned with the module clock signal CK, with a rising edge **801** of the module clock signal CK being at a center of a data eye **802**, when the MCS signal and the clock signal leave the module control circuit **116**. When the module control signal and the module clock signal reach an isolation device, however, their alignment can become shifted like the MCS **820** with respect to the CK signal, i.e., the rising edge **801** of the clock signal is near a left edge of a data eye of the MCS **820**, barely providing enough set up time for proper sampling of the module control signal. Or, the module control signal, like the MCS **830**, can be shifted with respect to the module clock signal such that a rising edge **801** of the clock signal is near a right edge of a data eye of the MCS, barely providing enough hold time for proper sampling of the module control signal. Or, ever worse, the module control signal, like the MCS **840**,

can be so shifted with respect to the module clock signal such that a rising edge **801** of the clock signal falls in the glitches **803** at the edge of a data eye of the MCS, meaning that the sampled results could be metastable.

In one embodiment, as shown in FIG. **9**, a receiver circuit **630** includes a metastability detection circuit (MDC) **910** to determine a metastability condition in a corresponding module control signal MCS**0**. In one embodiment, the MDC **910** generates at least one delayed version of the module clock signal CK and at least one delayed version of the corresponding MCS**0**. The MDC **910** also generates one or more metastability indicators and outputs the one or more metastability indicators via lines **912** and/or **914**.

The receiver circuit **630** further includes a signal selection circuit **920** that receives the module clock CK and the at least one delayed version of the module clock via signal lines **916**. The signal selection circuit **920** also receives the corresponding MCS and the at least one delayed version of the corresponding MCS via signal lines **918**. The signal selection circuit **920** selects a clock signal CK_i from among the module clock CK and the at least one delayed version of the module clock based on one or more of the metastability indicators. The signal selection circuit **920** may also select an MCS signal MCS_i from among the corresponding MCS and the at least one delayed version of the corresponding MCS based on at least one other metastability indicator.

The receiver circuit **630** further includes a sampler or register circuit **930** that samples the selected module control signal MCS_i according to the selected clock signal CK_i and outputs the sampled signal as the received module control signal, which is provided to the command processing circuit **640** for further processing (if needed) before being provided to the DQ routing circuits **320** and DQS routing circuit **620**.

FIG. **10**A illustrates an MDC **910** according to one embodiment. As shown, the MDC **910** includes a delay circuit **1012** that generates a delayed version MCS**1** of the corresponding MCS**0** by adding a predetermined amount of delay (e.g., 10 ps) to MCS**0**. MDC **910** also includes a delay circuit **1016** that generates a delayed version CK**1** of the clock signal CK**0** by adding a predetermined amount of delay to CK**0**. In one embodiment, CK**1** is delayed from CK**0** by about 1/10th of a clock cycle, e.g., 50-70 ps for an operating frequency of about 1600 MHz. The MDC **910** further includes a sampler circuit **1042** that samples MCS**1** according to CK**0** and outputs a sampled result A, a sampler circuit **1044** that samples MCS**0** according to CK**0** and outputs a sampled result B, and a sampler circuit **1046** that samples MCS**0** according to CK**1** and outputs a sampled result C. The MDC **910** further includes a logic circuit (e.g., a majority decision circuit) that generates metastability indicators Z**1** and Z**2** based on the sampled results A, B, and C.

In one embodiment, Z**1** is the result of a logic operation (e.g., an XNOR operation) on the sampled result, e.g., $Z1=\overline{A \oplus B}$, and Z**2** is the result of another logic operation on the sampled results, e.g., $Z2=\overline{B \oplus C}$. Thus, as shown in FIG. **10**B and Table 1 below, when a metastability condition of insufficient hold time occurs, i.e., a rising clock edge **1061** of CK**0** is close to the right side of a data eye where gliches at the edges of the data eyes can make C unpredicatable, A and B can be in agreement (i.e., Z**1** is true) while B and C are likely not in agreement (i.e., Z**2** is false). FIG. **10** C illustrates a metastability condition when there is insufficient set-up time. As shown in FIG. **10**C and Table 1 below, a rising clock edge **1061** of CK**0** is close to the left side of a data eye where gliches at the edges of the data eyes can make A unpredicatable. Thus, A and B can be in disagreement so Z**1** is false while B and C can be in agreement so Z**2** is true. Not shown in the figures is the situation that all A, B, and C are in agreement, meaning that both the rising clock edge **1061** of CK**0** and the rising clock edge **1062** of CK**1** are near the middle of an MCS**0** data eye so there is no metastability issues and both Z**1** and Z**2** are true, as shown in Table 1.

FIG. **10**D illustrates a signal selection circuit **920** according to an embodiment. As shown, in one embodiment, the signal selection circuit **920** includes a first multiplexor **1071** that selects between CK**0** and CK**1** based on the metastability indicator Z**1**, and a second multiplexor **1072** that selects between MCS**0** and MCS**1** based on the metastability indicator Z**2**. Thus, as shown in Table 1, where a metastability condition of insufficient hold time occurs, Z**1**=1 and Z**2**=0, and MCS**1** is output from multiplexor **1071** while CK**0** is output from multiplexor **1072**. Sampler **930** thus samples MCS**1** according to the rising edges of CK**0**. Thus, more hold time is provided to mitigate the metastability condition since MCS**1** is shifted from MCS**0** toward the right.

On the other hand, where a metastability condition of insufficient set-up time occurs, Z**1**=0 and Z**2**=1, and CK**1** is output from multiplexor **1071** while MCS**0** is output from multiplexor **1072**. Sampler **930** thus samples MCS**0** according to the rising edges of CK**1**. Since CK**1** is shifted from CK**0** toward the right, more set-up time is provided to mitigate the metastability condition.

TABLE 1

Metastability Detection and Signal Selection

Sampler Output			MS Indicators			Signal Selection	
A	B	C	Z1	Z2	MS Condition	CK	MCS
D1	D1	D2	1	0	insufficient hold time	CK0	MCS1
D1	D2	D2	0	1	insufficient set-up time	CK1	MCS0
D1	D1	D1	1	1	no metastability	CK0	MCS0

In the case when no metastability is detected, Z**1**=1 and Z**2**=1, and CK**0** is output from multiplexor **1071** while MCS**0** is output from multiplexor **1072**. So, the unshifted module control signal is sampled according to the unshifted module clock signal.

FIGS. **10**A-**10**D illustrate a relatively simple implementation of the metastability detection circuit (MDC) **910** where only three different sample points are provided to detect metastability condition in the module control signal. In general, the MDC **910** may generate more delayed versions of the module clock signal CK**0** and/or the corresponding module control signal MCS**0**, and may include more sampler circuits to sample any additional delayed versions of the module control signal according to either the module clock signal or one of the delayed versions of the module clock signal. For example, as shown in FIG. **11**A, the MDC **910** can include a plurality of delay circuits **1102** that generate m delayed versions of MCS**0**, e.g., MCS**1**, MCS**2**, . . . MCSm, and m delayed versions of CK**0**, e.g., CK**1**, CK**2**, . . . , CKm. The MDC **910** can include sampler circuits **1104** that sample MCS**0** according to CK**0**, CK**1**, . . . , CKm, respectively, and sampler circuits **1104** that sample MCS**0**, MCS**1**, MCS**2**, . . . MCSm according to CK**0**, respectively. The outputs of the samplers **1104** are provided to a logic circuit **1120**, which determines a metastability condition in MCK**0** based on the sampler outputs using, for

example, a majority decision logic. The logic circuit **1120** outputs a first metastability indicator on line(s) **912** and a second metastability indicator on line(s) **914**.

FIG. **11**B illustrates a signal selection circuit **920** according to an embodiment. As shown, in one embodiment, the signal selection circuit **920** includes a first multiplexor **1171** that selects between CK**0**, CK**1**, . . . , CKm based on the metastability indicator provided on line(s) **912**, and a second multiplexor **1172** that selects between MCS**0**, MCS**1**, . . . , MCSm based on the metastability indicator provided on line(s) **914**, such that the rising edges of the selected clock signal, e.g., Cki, are close to the middle of the respective data eyes in the selected module control signal, e.g., MCSi. The selected signals MCSi and Cki are provided to the sampler **930**, which samples MCSi according to the rising edges of CKi.

As stated above, in certain embodiments, since the isolation devices **118** are in the data paths between the MCH **101** and the respective groups of memory devices **112**, the MCH **101** does not have direct control of the memory devices **112**. Thus, conventional read/write leveling techniques are not sufficient for managing read/write data timing. In one embodiment, the isolation devices **118** includes signal alignment mechanism to time the transmission of read data signals based on timing information derived from a prior write operation, as discussed further below.

FIG. **12**A is a timing diagram for a write operation according to one embodiment. As shown, after a write command W/C associated with the write operation is received by the module control circuit **116** at time t**1**, the module control circuit **116** outputs one or more enable signals EN at time t**2** in response to the write commands. The one or more enable signals are received by an isolation device **118** at time t**3'**, which afterwards receives one or more strobe signal DQS from the MCH **101** at time t**4**. Note that the same enable signal may be received by another isolation device **118** at time t**3'**, which can be in a different cycle of the system clock MCK from the cycle which t**3** is in. The time interval between t**4** and t**1** is consistent with a write latency W.L. associated with the system **100**, and is controllable by the MCH **101** and knowable to the isolation device **118**. The time interval between t**4** and t**3**, referred to hereafter as an enable-to-write data delay EWD, can be determined by the isolation device **118** since both these signals are received by the isolation device. Based on such determination, the isolation device **118** can have knowledge of the time interval between t**3** and t**1**, referred to hereafter as a command-to-enable delay CED, which can be used by the isolation device **118** to properly time transmission of read data to the MCH, as explained further below.

FIG. **12**B is a timing diagram for a read operation according to one embodiment. As shown, after a read command R/C associated with the read operation is received by the module control circuit **116** at time t**5**, the module control circuit **116** outputs one or more enable signals EN at time t**6** in response to the read commands. The one or more enable signals are received by an isolation device **118** at time t**7**, which afterwards receives at time t**8** read data signals (not shown) and one or more strobe signal DQS from the respective group of memory devices. Note that the same enable signal may be received by another isolation device **118** at time t**3'**, which can be in a different cycle of the system clock MCK from the cycle which t**3** is in. Thus, the enable signals alone cannot be used to time the transmission of the read signals by the isolation devices **118**.

With knowledge of the time interval between t**7** and t**5**, which should be about the same as the time interval between t**3** and t**1**, i.e., the command-to-enable delay CED, in certain embodiments, the isolation device can add a proper amount of delay to the read data signals and the one or more DQS signal such that the read data signals and the one or more DQS signal are transmitted at time t**9** by the isolation device to the MCH **101** via the respective group of data/strobe signal lines **130**, with the time interval between t**9** and t**5** being consistent with a read latency R.L. associated with the system **100**.

The time interval between t**4** and t**3**, i.e., the enable to write data delay EWD, is determined by the delay control circuit **650** in the ID control circuit **310**, as shown in FIG. **6**. According to one embodiment, as shown in FIG. **13**, the delay control circuit **650** includes a peramble detector **1310** to detect a write preamble in the DQS, a flip-flop circuit **1320** having an enable input EN receiving one of the module control signals and a clock input CK receiving the buffered module clock signal CK**0**, and a counter circuit **1330** having a Start input receiving the one of the module control signals, a Stop input receiving an output of the flip-flop circuit **1320**. Thus, the output of the counter circuit, i.e., the delay signal DS, would indicate a time interval from when the write preamble is detected and when the one of the module control signal is received.

FIG. **14** illustrates a DQ or DQS routing circuit **320** or **620** according to an embodiment. As shown, the DQ/DQS routing circuit **320/620** includes a DQ/DQS pin **1401** that is coupled to the corresponding DQ/DQS signal line **322/324**, a set of one or more DQS pins **1402** that is coupled to a corresponding module DQ/DQS line(s) Y/Y_{DQS}, or YA/YA_{DQS} and YB/YB_{DQS}. The DQ/DQS routing circuit **320/620** further includes a write strobe buffer **1410** that buffers write data/strobe, and a write data/strobe receiver **1420** that samples the write data/strobe. The DQ/DQS routing circuit **320/620** further includes a plurality of write paths **1430** that are selectable or can be selectively enabled by one or more of the module control signals, such as the enable signals ENA and ENB.

The DQS routing circuit further includes a plurality of read paths **1450** that are selectable by the one or more of the module control signals. Output from the selected read path is delayed in a delay circuit **1460** by an amount controlled by the delay signal DS, and sampled by a sampler circuit **1470**. The sampled read data/strobe is transmitted by transmitter **1480** onto the corresponding data/strobe signal line **322/324** via the DQ/DQS pin **1401**.

FIG. **15** illustrates a DQS routing circuit **620** according to an embodiment. As shown, the DQS routing circuit **620** includes a first DQS pin **1501** that is coupled to a corresponding DQS signal line **324**, a second DQS pin **1502**A that is coupled to a corresponding module DQS line YA_{DQS}, a third DQS pin **1502**B that is coupled to a corresponding module DQS line YB_{DQS}. The DQS routing circuit **620** further includes a first write strobe path coupled between the first DQS pin **1501** and the second DQS pin **1502**A and a second write strobe path coupled between the first DQS pin **1501** and the third DQS pin **1502**B. The first write strobe path includes a write strobe buffer **1510** that buffers a write strobe, a write strobe receiver **1520** that samples the write strobe according to the buffered module signal CK**0**. The sampled write strobe is provided to the DQ routing circuits **320** as the write strobe WDQS. The first write strobe path further includes a first write strobe transmitter **1530**A that transmits the write strobe to one or more memory devices **112** coupled to the module strobe line YA_{DQS}. The second write strobe path includes the write strobe buffer **1510**, the write strobe receiver **1520**, and a second write strobe trans-

mitter **1530**B that transmits the write strobe to one or more memory devices **112** coupled to the module strobe line YB_{DQS}. The first and second write strobe transmitters, **1530**A and **1530**B, are controlled by two enable signals, ENA and ENB, respectively, such that the first write strobe path and the second write strobe path can be selectively enabled/disabled by the enable signals, ENA and ENB.

The DQS routing circuit further includes a read strobe path coupled between the first DQS pin **1501** and a selected one of the second and third DQS pins **1502**A and **1502**B. In the read strobe path, a select circuit **1550** (e.g., a multiplexor) selects either a read strobe signal received via DQS pin **1502**A or a read strobe signal received via DQS pin **1502**B based on one or both of the enable signals ENA or ENB. The selected read strobe signal is delayed in a delay circuit **1560** by an amount controlled by the delay signal DS, and sampled by a sampler circuit **1570** according to the buffered module clock signal CK**0**. The sampled read strobe is provided to the DQ routing circuits **320** as the read strobe RDQS and is transmitted by transmitter **1580** onto the corresponding strobe signal line **324** via the first DQS pin **1501**.

FIG. **16** illustrates a DQ routing circuit **320** according to an embodiment. As shown, the DQ routing circuit **320** includes a first DQ pin **1601** that is coupled to a corresponding DQ signal line **130**, a second DQ pin **1602**A that is coupled to a corresponding module DQ line YA_{DQ}, a third DQ pin **1602**B that is coupled to a corresponding module DQ line YB_{DQ}. The DQ routing circuit **320** further includes a first write data path coupled between the first DQ pin **1601** and the second DQ pin **1602**A and a second write data path coupled between the first DQ pin **1601** and the third DQ pin **1602**B. The first write data path includes a write data buffer **1610**, a write data receiver **1620** that samples write data according to the write strobe WDQS from the DQS routing circuit **620**, and a first write data transmitter **1630**A that transmits the write data to one or more memory devices **112** coupled to the module data line YA_{DQ}. The second write data path includes the write data buffer **1610**, the write data receiver **1620**, and a second write data transmitter **1630**B that transmits the write data to one or more memory devices **112** coupled to the module data line YB_{DQ}. The first and second write data transmitters, **1530**A and **1530**B, are controlled by two enable signals, ENA and ENB, respectively. Thus, the first write data path and the second write data path can be selectively enabled/disabled by the enable signals, ENA and ENB.

The DQ routing circuit further includes a read data path coupled between the first DQ pin **1601** and a selected one of the second and third DQ pins **1602**A and **1602**B. In the read data path, a select circuit **1650** (e.g., a multiplexor) selects either a read data signal received via DQ pin **1602**A or a read data signal received via DQ pin **1602**B based on one or both of the enable signals ENA or ENB. The selected read data signal is delayed in a delay circuit **1660** by an amount controlled by the delay signal DS. The delayed read data signal is then sampled by a receiver circuit **1670** according to the read strobe RDQS from the DQS routing circuit **620**, and transmitted by transmitter **1680** onto the corresponding data signal line **130** via the first DQ pin **1601**.

FIG. **17** illustrate a delay circuit **1560** or **1660** according to an embodiment. As shown, the delay circuit **1560** or **1660** includes a plurality of delay stages, such as delay stages **1710**, **1720**, and **1730**, each delaying a read data or read strobe signal from the select circuit **1550**/**1650** by a predetermined amount. The delay circuit **1560** or **1660** further includes a select circuit **1740** (e.g., a multiplexor) that selects from among the read data or read strobe signal and the outputs from the delay stages according to the delay signal DS. The output of the select circuit **1740**, is provided to the sampler circuit **1570** or **1670**, either directly or after being buffered by a buffer circuit **1750**.

Thus, as shown in FIG. **18**, in one embodiment, a memory module **110** operates in the memory system **100** according to a method **1800**. In the method, during a write operation, one or more module control signals are received by an isolation device **118** from a module control circuit or module controller **116** (**1810**). The module controller **116** generates the one or more module control signals in response to C/A signals representing a write command from the MCH **101**. The one or more module control signals are used to control the isolation device **118**. For example, the one or more module control signals may include one or more first enable signals to enable a write path to allow write data be communicated to a selected subgroup of memory devices among the group of memory devices coupled to the isolation device **118**. After a time interval from receiving the one or more first enable signals, write data DQ and write strobe DQS are received by the isolation device **118** from the MCH **101** (**1820**). In one embodiment, upon receiving the one or more first enable signal, a counter is started, which is stopped when the write data DQ or write strobe DQS is received. Thus, a time interval EWD between receiving the one or more first enable signals and receiving the write strobe signal DQS is recorded.

Since the time interval between the arrival of the command signals from the MCH **101** and the arrival of the write data/strobe signal DQ/DQS from the MCH **101** is a set according to a write latency parameter associated with the system **100**, the time interval EWD can be used to ascertain a time interval CED between the time when a command signal is received by the memory module **110** and the time when the one or more enable signals are received by the isolation device **118**. The time interval CED can be used by the isolation device **118** to properly time the transmission of read data to the MCH **101**, as described above and explained further below.

As shown in FIG. **18**, a delay signal DS is generated according to the time interval EWD (**1830**). Concurrent to receiving the write strobe signal DQS, the isolation device **118** also receives a set of write data signals DQ (**1840**). The received write data signals are transmitted to the subgroup of memory devices (**1850**), which are selected from the group of memory devices coupled to the isolation device **118** by the one or more first enable signals.

During a read operation, another set of module control signals including, for example, one or more second enable signals, are received by the isolation device **118** from the module controller **116** (**1860**). The one or more second enable signals are generated by the module controller **116** in response to read command signals received from the MCH **101**, and are used by the isolation device **118** to select a subgroup of memory devices from which to receive read data. Afterwards, a read strobe signal DQS and a set of read data signal DQ are received from the selected subgroup of memory devices (**1870**). To properly time the transmission of the DQS and DQ signals to the MCH **101**, the DQS and DQ signals are adjusted (e.g., delayed) according to the delay signal DS, such that the DQS and DQ signals follow a read command by a time interval consistent with a read latency parameter associated with the system **100**.

In certain embodiments, especially the embodiments shown in FIG. **2**D, the delay circuits **1560** and **1660** shown in FIGS. **15** and **16** are not needed to provide alignment of

the read data. As shown in FIG. **19**, the ID control circuit **310** includes a clock regeneration circuit **1920** that regenerates the clock signal CK received from the control circuit **116**, according to the delay signal DS. The regenerated clock signals CK**0** and CKM each includes a proper amount of delay as compared to the clock signal CK. The clock CK**0** is provided to the strobe routing circuit **620** so that the strobe signals are properly timed to result in proper data alignment. The regenerated clock signal CKM is provided to the respective set of memory devices so that the respective data buffer **118** and the respective set of memory devices are locally synchronized.

We claim:

1. A memory module operable to communicate with a memory controller via a memory bus, the memory bus including signal lines, the signal lines including a set of control/address signal lines and a plurality of sets of data/strobe signal lines, the memory module comprising:

a module board having edge connections for coupling to respective signal lines in the memory bus;

a module control device mounted on the module board and configured to receive system command signals for memory operations via the set of control/address signal lines and to output module command signals and module control signals in response to the system command signals, the module control device being further configured to receive a system clock signal and output a module clock signal; and

memory devices mounted on the module board and configured to receive the module command signals and the module clock signal, and to perform the memory operations in response to the module command signals, the memory devices including a plurality of sets of memory devices corresponding to respective sets of the plurality of sets of data/strobe signal lines; and

a plurality of buffer circuits corresponding to respective sets of the plurality of sets of data/strobe signal lines, wherein each respective buffer circuit of the plurality of buffer circuits is mounted on the module board, coupled between a respective set of data/strobe signal lines and a respective set of memory devices, and configured to receive the module control signals and the module clock signal, the each respective buffer circuit including a data path corresponding to each data signal line in the respective set of data/strobe signal lines, and a command processing circuit configured to decode the module control signals and to control the data path in accordance with the module control signals and the module clock signal, wherein the data path corresponding to the each data signal line includes at least one tristate buffer controlled by the command processing circuit and a delay circuit configured to delay a signal through the data path by an amount determined by the command processing circuit in response to at least one of the module control signals.

2. The memory module of claim **1**, wherein the memory operations include a first memory operation and a second memory operation subsequent to the first memory operation, wherein the command signals include a first set of command signals for the first memory operation and a second set of command signals for the second memory operation, wherein the module control signals include a first set of module control signals output by the module control device in response to the first set of command signals and a second set of module control signals output by the module control device in response to the second set of command signals, wherein the at least one of the module control signals include at least one of the first set of module control signals, and wherein the signal through the data path is a signal associated with the second memory operation.

3. The memory module of claim **2**, wherein the memory devices are arranged in a plurality of ranks and the respective set of memory devices include at least one memory device from each of the plurality of ranks, wherein the module command signals include a first set of module command signals output by the module control device in response to the first set of command signals and a second set of module command signals output by the module control device in response to the second set of command signals, and wherein the second set of module command signals include chip select signals that select the at least one memory device in the respective set of memory devices from one of the plurality of ranks to perform the second memory operation.

4. The memory module of claim **1**, wherein each of the plurality of buffer circuits has a data width of 1 byte, and wherein each of the memory devices has a data width of 1 byte.

5. The memory module of claim **1**, wherein each of the plurality of buffer circuits has a data width of 1 byte, and wherein each of the memory devices has a data width of 4 bits.

6. The memory module of claim **1**, wherein the each respective buffer circuit further includes a receiver circuit for each of the module control signals, the receiver circuit including a metastability detection circuit configured to determine a metastability condition in the each of the module control signals with respect to the module clock signal.

7. The memory module of claim **6**, wherein each of the plurality of buffer circuits has a data width of 1 byte, and wherein each of the memory devices has a data width of 1 byte.

8. The memory module of claim **6**, wherein each of the plurality of buffer circuits has a data width of 1 byte, and wherein each of the memory devices has a data width of 4 bits.

9. The memory module of claim **1**, wherein the each respective buffer circuit further includes a clock regeneration circuit configured to generate a local clock signal having a programmable phase relationship with the module clock signal, wherein the each respective buffer circuit is further configured to output the local clock signal to the respective set of memory devices.

10. The memory module of claim **9**, wherein the each respective buffer circuit includes a first data path for transmitting a strobe signal associated with the second memory operation and a second data path for transmitting a first data signal associated with the second memory operation, the first data path including a sampler that samples the strobe signal in accordance with the local clock signal, and the second data path including a sampler that samples the first data signal in accordance with the sampled strobe signal.

11. The memory module of claim **10**, wherein each of the plurality of buffer circuits has a data width of 1 byte, and wherein each of the memory devices has a data width of 1 byte.

12. The memory module of claim **10**, wherein each of the plurality of buffer circuits has a data width of 1 byte, and wherein each of the memory devices has a data width of 4 bits.

* * * * *