NETLIST

Technology Tutorial

In the Matter of Certain Memory Modules and Components Thereof and Products Containing Same

Inv. No. 337-TA-1023

May 8, 2017

CDX-200.1

Technology Overview: Memory Module

- The Netlist Patents relate to memory modules in a server
  - A memory module is inserted in a memory slot in a server's mother board
  - Memory modules are called Dual In-Line Memory Modules (DIMMs) because there are in-line connections on each side of the module

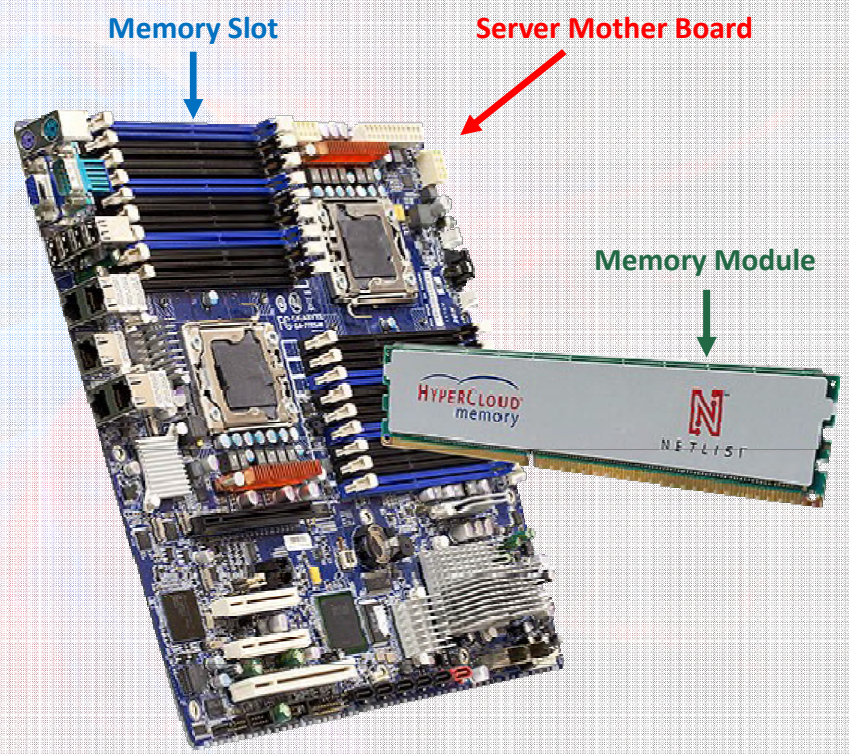

CDX-200.3

Technology Overview: What is Memory?

- Memory is used to store information for fast access by the processor
- Memory commonly used today is SDRAM or synchronous dynamic random access memory
  - SDRAM emerged in the 1990s and has been standardized by the JEDEC (Joint Electron Devices Engineering Council)
  - SDRAM has evolved in several generations, including DDR, DDR2, DDR3 and currently DDR4

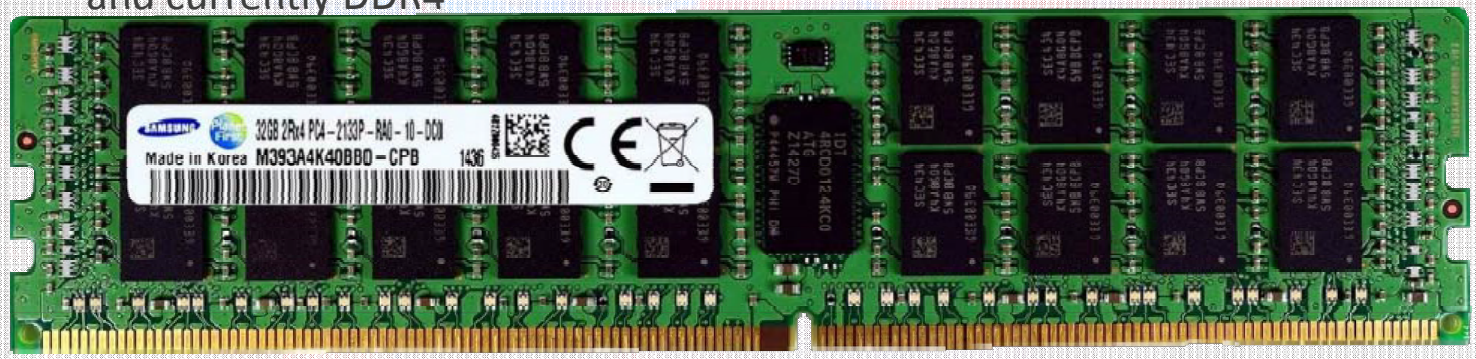

CDX-200.4

Technology Overview: SDRAM Fundamentals

SDRAM contains several sections called banks

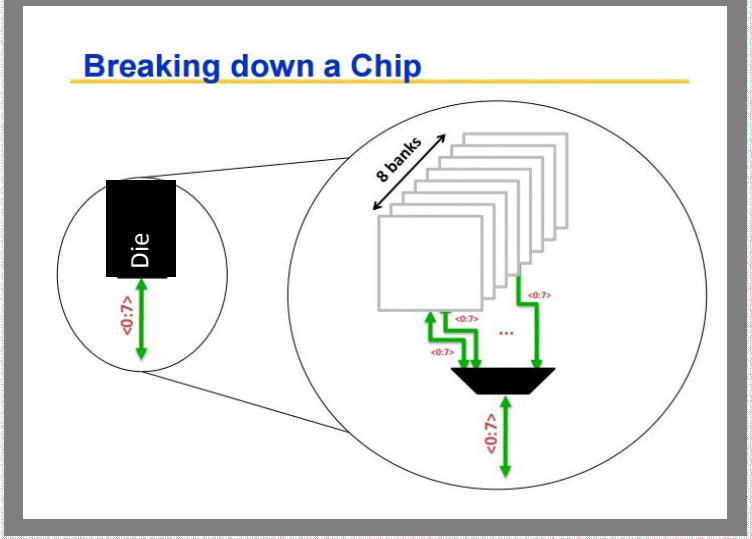

Each bank consists of rows and columns of memory

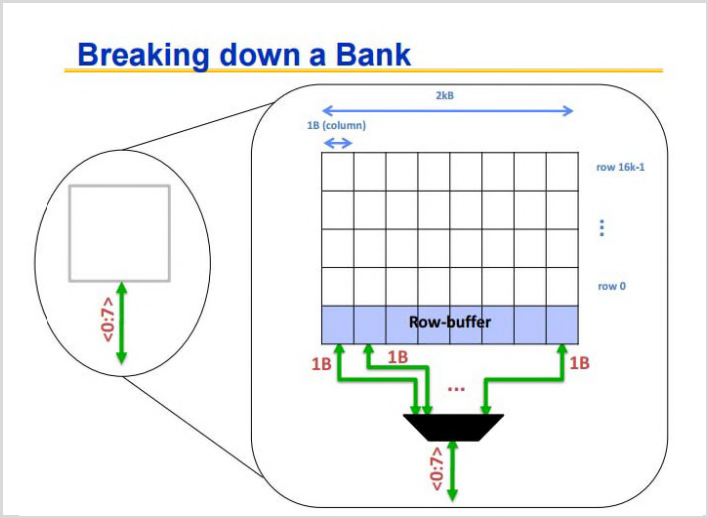

CDX-200.5

Technology Overview: Memory Ranks

- A rank is a set of DRAMs that are written to or read from together
- For example, a memory controller reads or writes 64 DQ (data) bits at a time
  - Each DRAM reads/writes 8 DQ bits (x8, or by eight)
  - Need 8 DRAMs in a rank to provide the 64 bits at once

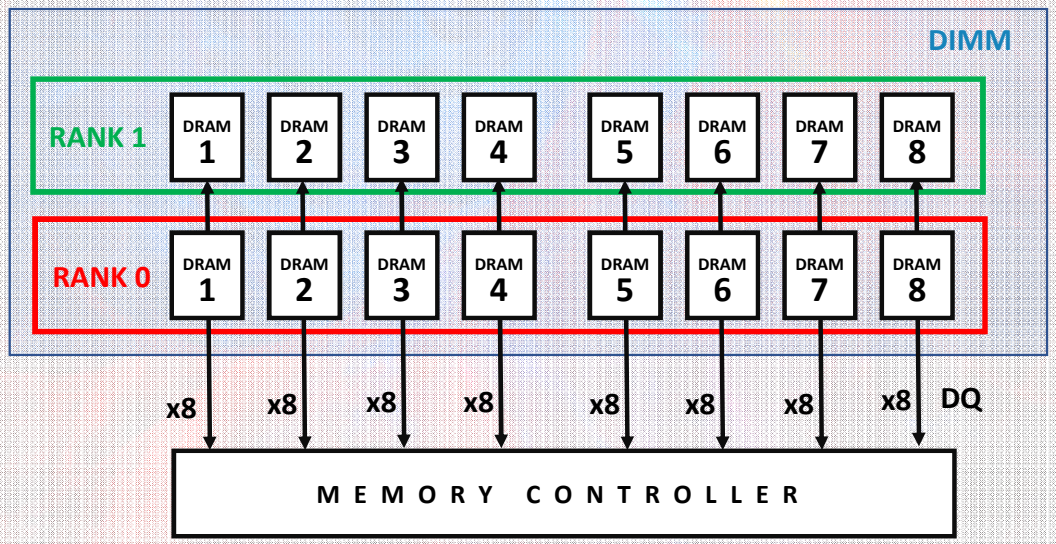

CDX-200.6

Technology Overview: Data Strobe Signal

- Data Strobe (DQS) clocks the data (DQ) into and out of the DRAM

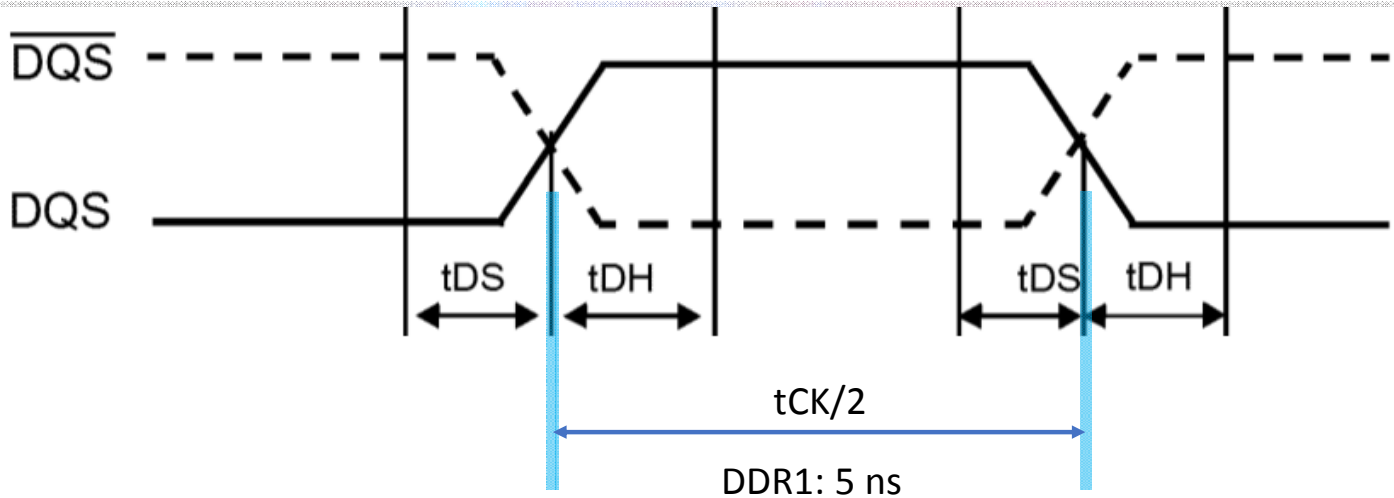

DDR1: 5 ns
DDR2: 2.5 ns
DDR3: 1.25 ns
DDR4: 0.55 ns

- One nanosecond (1 ns) is one billionth of a second
- A signal travels roughly 6 inches in 1 ns in a memory module not accounting for load

CDX-200.7

Evolution of DIMMs: JEDEC Un-Buffered DIMM (UDIMM)

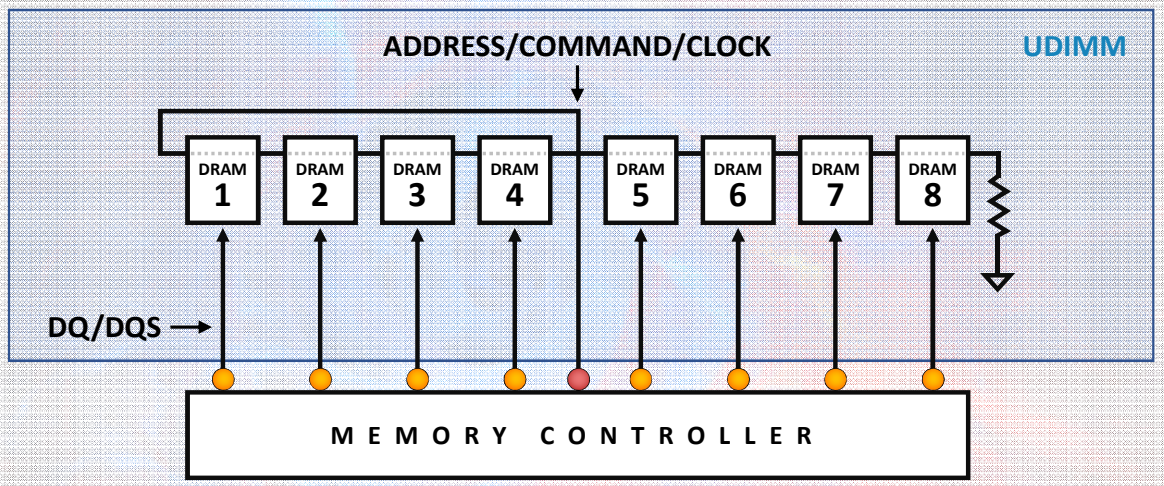

CDX-200.8

Evolution of DIMMs: JEDEC Registered DIMM (RDIMM)

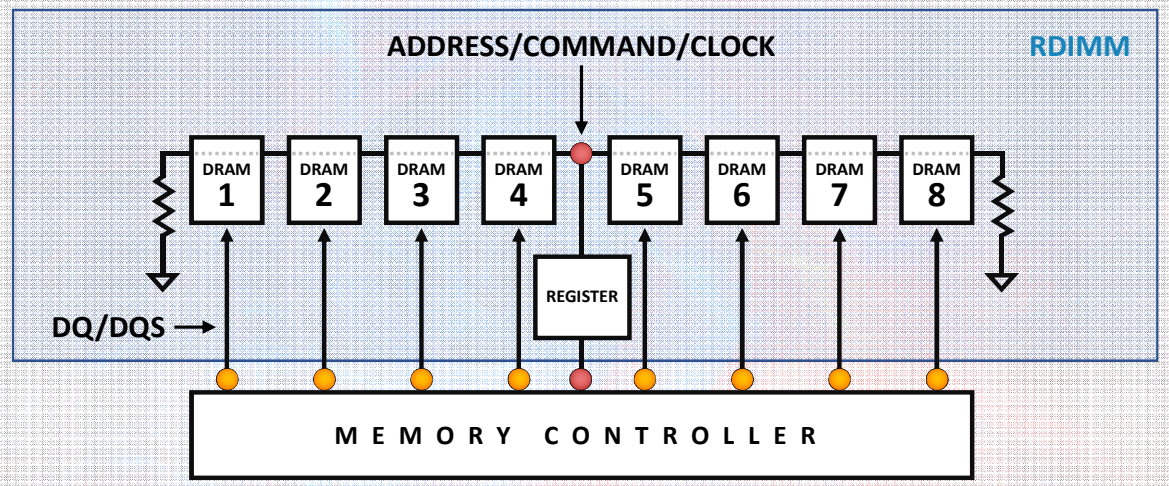

CDX-200.9

Evolution of DIMMs: Fully-Buffered DIMM (FBDIMM)

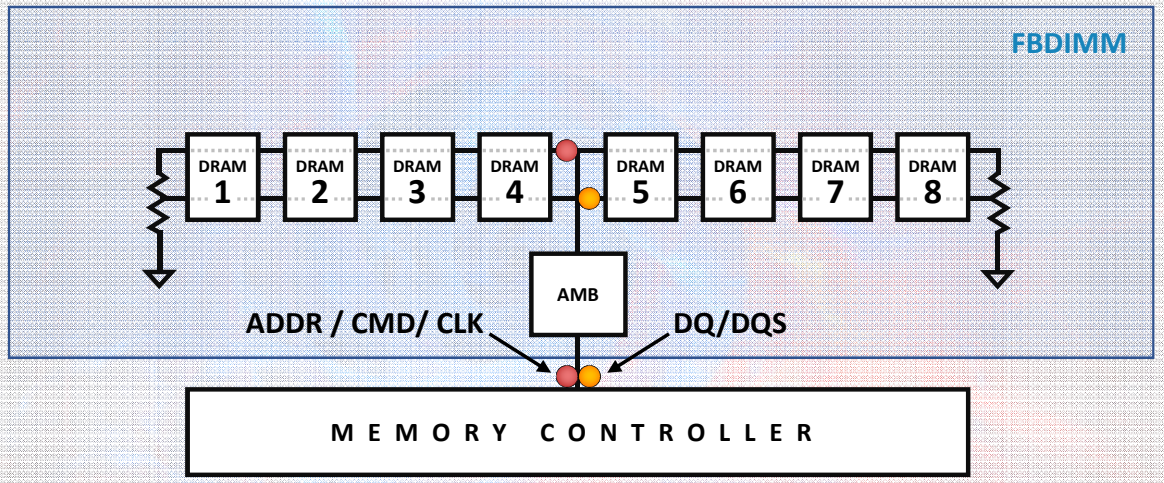

CDX-200.10

Evolution of DIMMs: JEDEC DDR3 LRDIMM (Gen1)

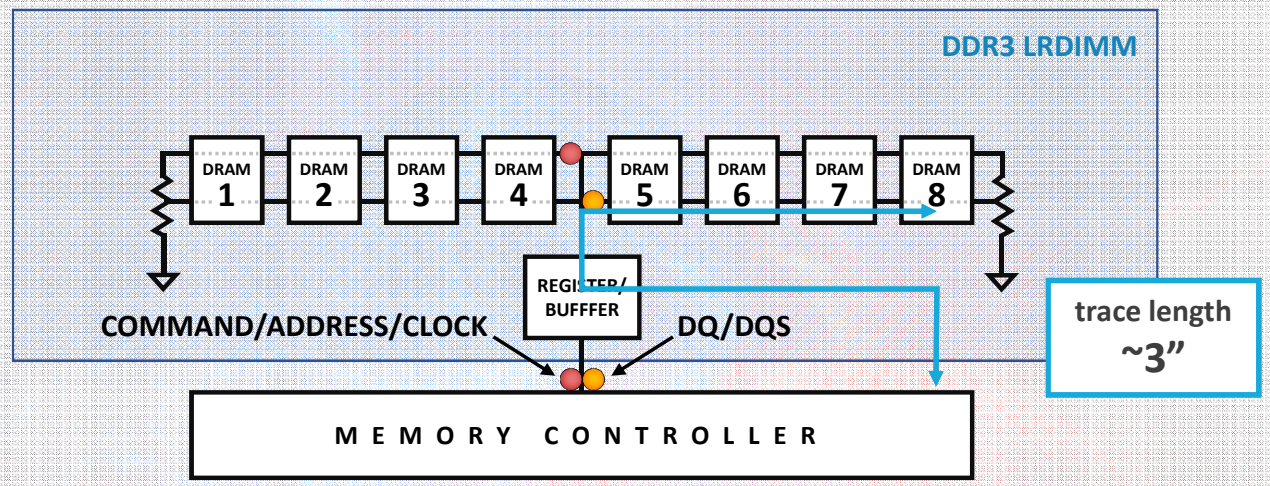

CDX-200.11

Technology Today: JEDEC DDR4 LRDIMM (Gen2)

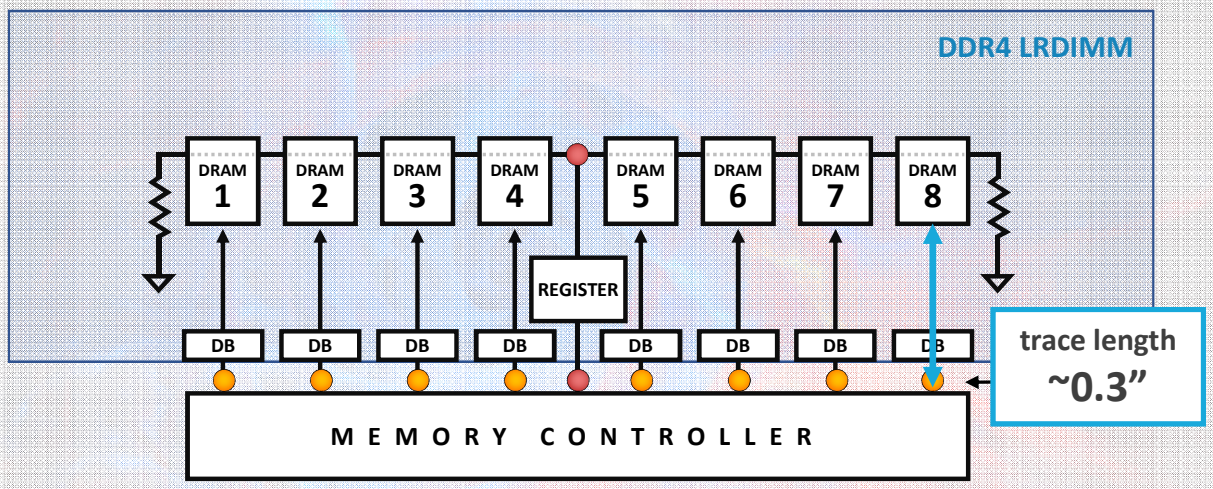

CDX-200.14