US006086380A

United States Patent [19]

Chu et al.

[11] **Patent Number: 6,086,380**

[45] **Date of Patent: Jul. 11, 2000**

[54] **PERSONALIZED KARAOKE RECORDING STUDIO**

[76] Inventors: **Chia Chen Chu**, 4350 Macronald Dr., La Mesa, Calif. 91941; **Hong Lan**, 2452 Desire Ave., Rowland Hights, Calif. 91748; **David Wung**, 13612 Navajo, Tustin, Calif. 92680; **Carl V. Price**, 1184 Seacoast Dr., Imperial Beach, Calif. 91932

[21] Appl. No.: **09/137,500**

[22] Filed: **Aug. 20, 1998**

[51] **Int. Cl.**[7] **G10H 1/36**

[52] **U.S. Cl.** ..... **434/307 A**; 434/307 R; 84/609; 386/102; 369/30

[58] **Field of Search** ..... 434/118, 307 R–318, 434/323, 365, 219; 84/477 R, 601–611, 615, 625, 645; 386/96, 97, 104, 106, 102, 107; 348/722; 360/18, 32, 131–136, 69; 361/681; 369/30, 48, 178, 192

[56] **References Cited**

U.S. PATENT DOCUMENTS

3,233,346	2/1966	Cornberg	434/307 R
4,167,821	9/1979	Bibson, Jr. et al.	434/219
4,486,180	12/1984	Riley	434/323 X
4,695,903	9/1987	Serap et al.	386/106
5,144,454	9/1992	Cury .	
5,209,662	5/1993	Fujita et al.	434/307 R X
5,464,946	11/1995	Lewis	84/609
5,481,509	1/1996	Knowles .	
5,782,692	7/1998	Stelovsky	434/307 A X
5,810,598	9/1998	Wakamoto	360/69 X
5,902,115	5/1999	Katayama	434/307 A
5,993,216	11/1999	Stogner	434/307 R X
6,018,121	1/2000	Devecka	84/477 R X

Primary Examiner—Joe H. Cheng
Attorney, Agent, or Firm—Charles H. Thomas

[57] **ABSTRACT**

In a self-operated karaoke recording booth a user is provided with a selection of background scenes from which to choose and also with the option of having the lyrics of the karaoke selection displayed or suppressed. A video camera positioned at the user's eye level is located on the nonreflective side of a one-way mirror and is directed at a specified performer location through the one-way mirror, which is inclined at a forty-five degree angle relative thereto. Messages and video displays are provided to the user by a video display monitor connected to a computer that faces the reflective side of the one-way mirror and is also located at a forty-five degree angle relative thereto. The system is designed to maintain the visual focus of the performer directly into the lens of the video camera throughout the performance and to combine the video camera images with the background scene in such a way as to avoid a double exposure or phantom image of the performer against the background. The performer can choose to have the lyrics of the selected karaoke composition displayed or suppressed. If the election is for a display, the lyrics are displayed at the center of the viewing screen, directly in line with the video camera.

15 Claims, 3 Drawing Sheets

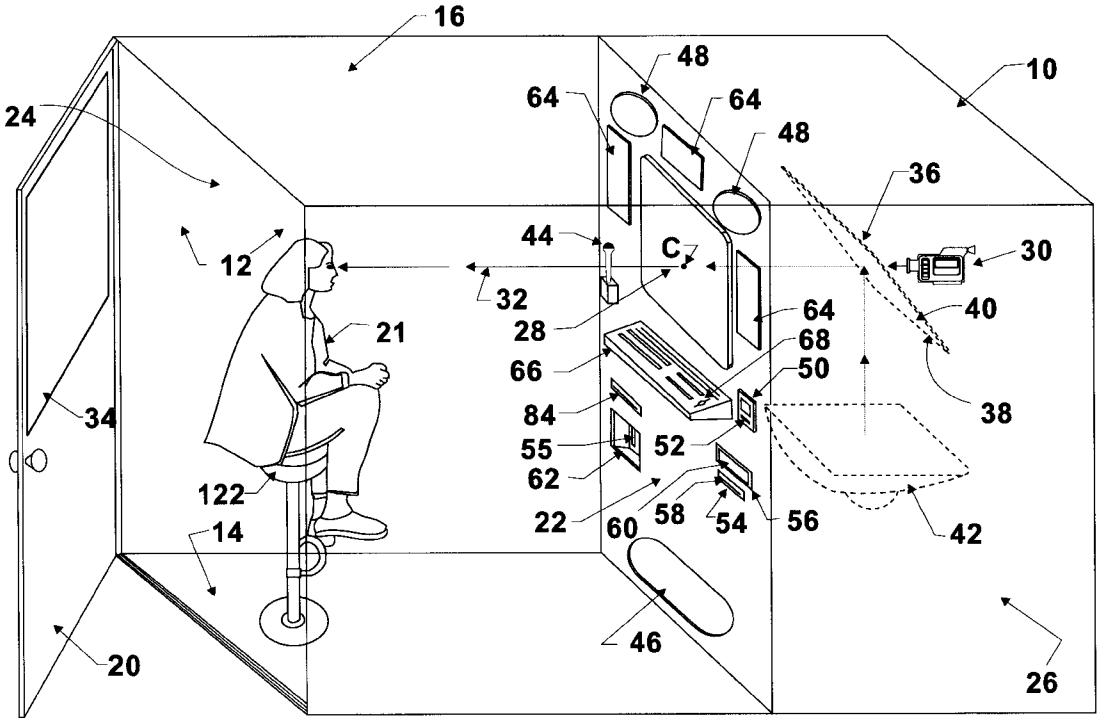

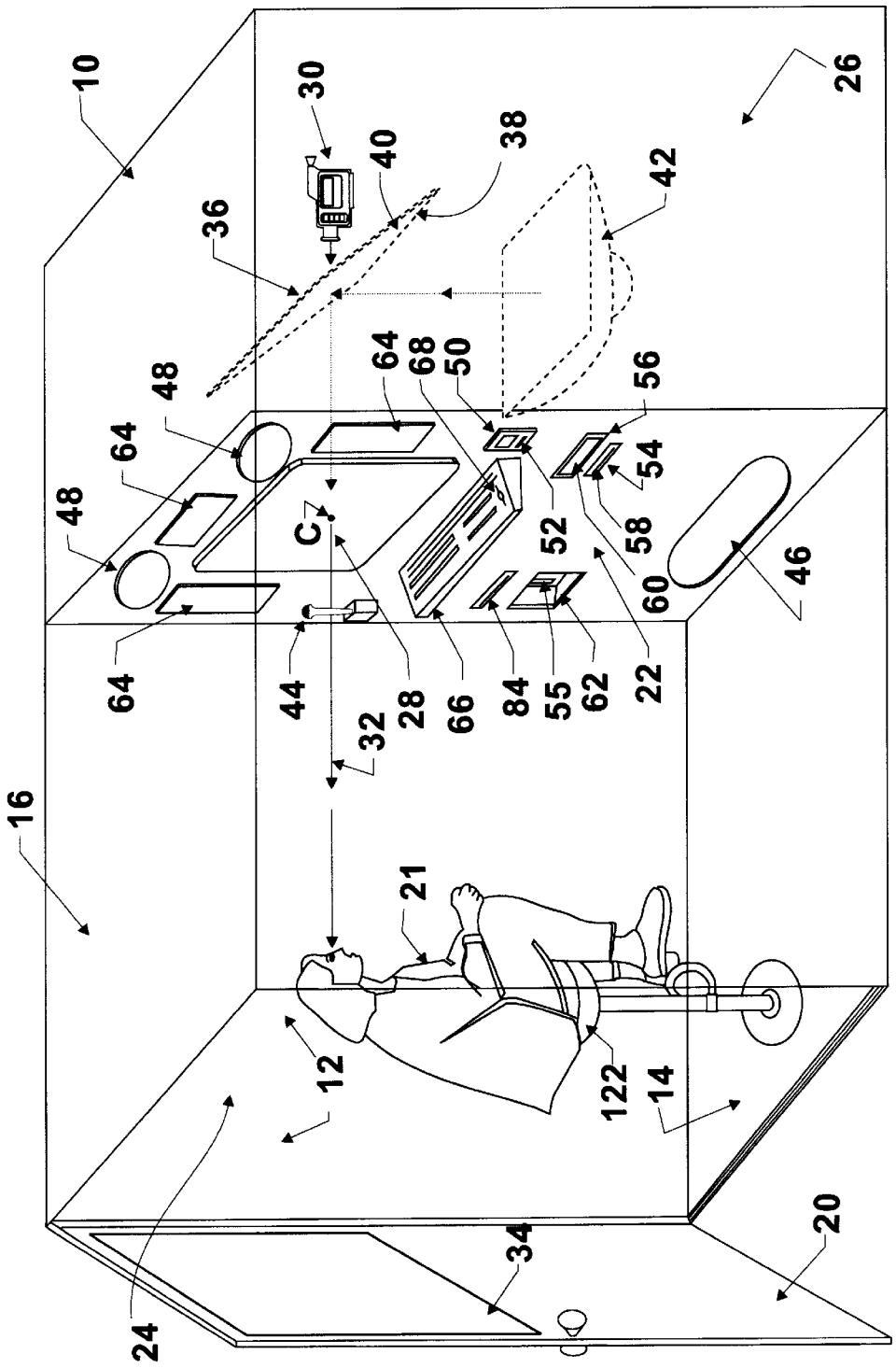
10
30
40
38
26
42
36
64
68
50
56
48
64
48
54
52
58
60
46
C
64
44
28
66
84
55
62
22
32
16
21
12
122
14
24
34
20

FIG. 1

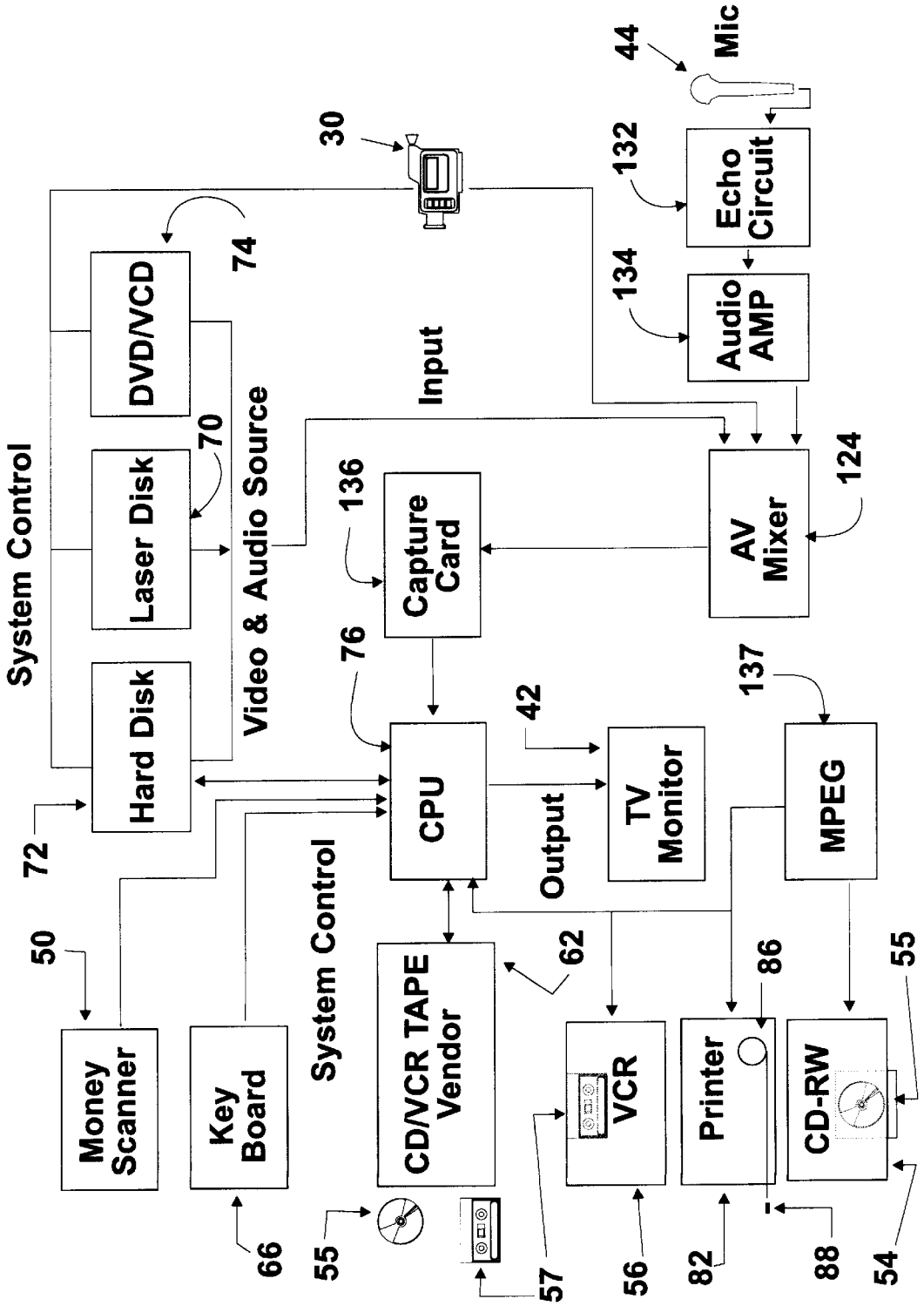
Mic
44
30
132
Echo Circuit
134
Audio AMP
74
DVD/VCD
Input
System Control
70
Laser Disk
Video & Audio Source
136
Capture Card
AV Mixer
124
76
Hard Disk
42
137
CPU
TV Monitor
MPEG
72
Output
System Control
50
62
86
55
Money Scanner
Key Board
CD/VCR TAPE Vendor
VCR
Printer
CD-RW
66
55
57
56
82
88
54

FIG. 2

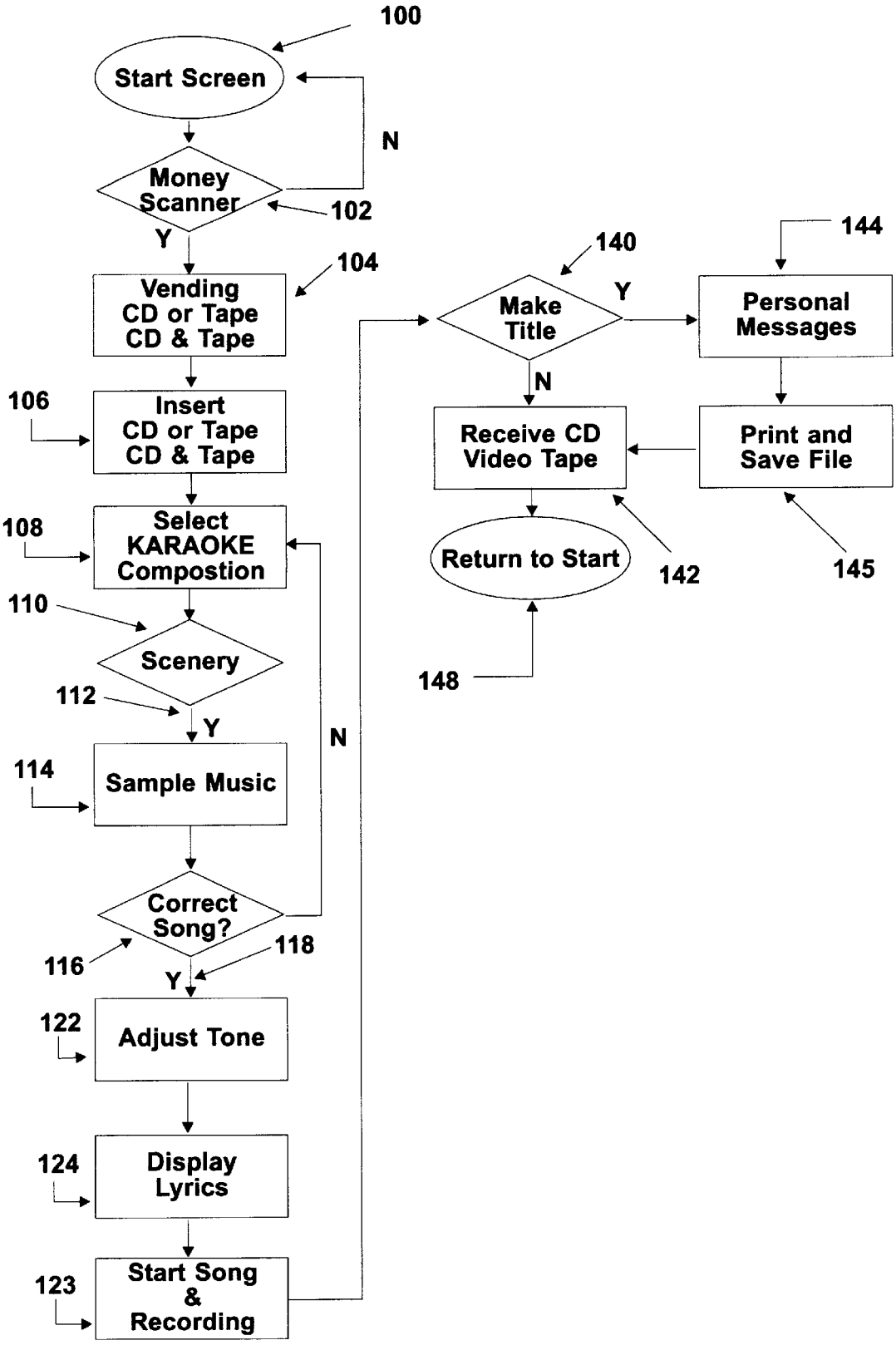
100
Start Screen
N
Money Scanner
102
Y
104
Vending CD or Tape CD & Tape
106
Insert CD or Tape CD & Tape
108
Select KARAOKE Compostion
110
Scenery
112
Y
N
114
Sample Music
Correct Song?
116
118
Y
122
Adjust Tone
124
Display Lyrics
123
Start Song & Recording
140
Make Title
Y
N
144
Personal Messages
Receive CD Video Tape
Print and Save File
Return to Start
142
145
148

FIG. 3

PERSONALIZED KARAOKE RECORDING STUDIO

BACKGROUND OF THE INVENTION

1. Field of the Invention

The present invention relates to an automated, self-operated, karaoke recording system for recording a video and audio karaoke performance by a karaoke performer, and for providing an audio and video copy thereof to the performer in exchange for money.

2. Description of the Prior Art

In recent years the popularity of karaoke entertainment has lead to a desire by karaoke enthusiasts to have copies of themselves performing karaoke musical composition selections. Some devices have been proposed which allow a person to perform and record a karaoke selection and to receive a copy of that performance at the conclusion thereof in exchange fbr money. The marketing concept behind such devices follows the concepts of self-operated photo booths that have been utilized for many years.

In a conventional photo booth, a user assumes a designated position within the booth, seated in front of a camera. The booth is illuminated within and usually equipped with curtains on the sides through which a user enters and leaves so as to control the level of illumination within the booth. By operating a conventional money receiving, verification, and control device, a camera directed at the user automatically, or under user control, takes a number of photographs of the user or users who remain at a designated posing position within the booth. The photographs are then automatically developed immediately and dispensed to the user, the money having already been collected. The user then exits the booth.

Essentially the same marketing concept has been proposed for the recordation of private karaoke performances by means of which users can record their visual and audio performances of a karaoke selection, and receive a copy of their performances for their own personal uses. One such conventional system is described in U.S. Pat. No. 5,481,509, which is incorporated herein by reference. The '509 patent discloses a jukebox entertainment system that provides for the recordation of karaoke singing by an operator. In that system, a television monitor is disposed in the front face of a jukebox. The lens of a video camera is mounted substantially flush with the front face of the jukebox at a position beneath the television monitor. A computer system is used to display digital audio/video data stored in removable hard disk drives in the jukebox. The user makes selections of tides to be recorded.

A microphone is coupled to an audio amplifier so that a user can sing along with the audio out signal produced by the decoder board when a karaoke song is played. A background video image including the words of the song is displayed on the television monitor, while the audio background music is played through a speaker.

In the '509 patent the video camera is coupled to a video tape recorder. The video output of the video tape recorder is coupled to the video-out line of the decoder board. The user's image can be shown on the television monitor or on one or more remote television sets. User's may utilize the video camera and the video tape recorder to record themselves performing a karaoke song on video tape.

Conventional karaoke recording systems such as those disclosed in the '509 patent, have certain undesirable features and have not gained wide-spread public acceptance. One very disadvantageous feature is that in such conventional systems the karaoke performer is always looking at the video display monitor, rather than the video camera which is always located off to the side, above or below the video display monitor. As a consequence, in the recorded video performance the performer does not look directly out at the viewer, but rather looks in a different direction. This detracts significantly from the quality of the recorded performance.

Another distinct disadvantage of conventional, self-operated karaoke recording systems is that the lyrics of the karaoke music composition are displayed in a line running across the bottom of a screen. As a consequence, the performer's head is always turning first to one side and then to the other in order to view the lyrics on the screen. This also is disconcerting to a person viewing the recorded performance.

Another disadvantageous feature of conventional systems of this type is that when the performer's image is superimposed upon a prerecorded background scene, it appears as a double exposure or phantom image. Therefore, the background scenes utilized are typically very washed out or faint, so as to minimize this effect. This detracts markedly from the vibrancy of the recorded performance.

A further deficiency of conventional, self-operated karaoke recording systems is that they do not accommodate variations in the vocal range of different persons performing the karaoke selections. As a consequence, a person singing a karaoke selection is often forced to attempt to reach either high or low notes beyond his or her vocal range. The resultant audio recordation of singing by the performer is therefore significantly diminished in quality.

These and other deficiencies in prior art self-operated karaoke recording systems lead to recorded karaoke performances that are generally of such a low quality as to be unacceptable to most prospective purchasers.

SUMMARY OF THE INVENTION

The present invention is a personalized karaoke recording studio in which a user creates a customized karaoke CD or video tape of himself or herself. The system involves a small booth, somewhat larger than an conventional, self-operated photography booth. A personalized karaoke recording studio of this type is an automated, self-operated karaoke recording system that can be located at suitable locations, such as karaoke clubs, shopping malls, restaurants, and bars. The system employs a soundproof booth with karaoke playing and recording equipment.

The user enters the booth and stands or sits at a particular location. The user must then elect to record a karaoke performance on either a CD, a video tape cassette, or both. An appropriate blank article of the selected recording medium is dispenses to the user upon payment of the appropriate amount of money into a money scanner.

The recording studio is divided by a vertical control panel into an occupant enclosure and an equipment enclosure. A video camera is located in the equipment enclosure and is directed through a one-way mirror toward the user's location in the occupant enclosure and through a vertically oriented viewing screen in the control panel in front of the mirror so that at least the face of the user is directly in the field of view the video camera through the one-way mirror.

The video camera transmits the image of the user's face onto a video display that is not located in the line-of-sight between the video camera and the user. However, the video display does face the reflective side of the one-way mirror. The viewing axis of the video camera and the axis of

alignment of the video display are oriented perpendicular to each other, but are both oriented at a forty-five degree angle relative to the one-way mirror. As a consequence, images that appear on the video display device are directed toward the one-way mirror, and thus are visible through the viewing screen by the user, whose head is aligned along the video camera axis. The user thus looks at the viewing screen, and hence directly into the lens of the video camera.

From a computer keyboard located below the screen the user selects a particular background scene from among a plurality of alternatively selectable, electronically stored background image scenes. The selected scene is also displayed through the video display device as a reflection from the reflecting face of the one-way mirror directly behind the image of the face of the user. Typically, the background scene involves a moving sequence that appears to be occurring directly behind the image of the face of the user.

Unlike conventional, self-operated karaoke display systems, the karaoke recording system of the invention is able to mask out that portion of the background scene that occupies the same space in the viewing screen as the image of the face of the performer. To the contrary, the image of the performer suppresses both display and recordation of the portion of the background scene that would otherwise appear in the same space as the image of the performer's face. Therefore, and unlike conventional systems, the finished recorded performance produced by the karaoke recording system of the invention does not result in a "double exposure" effect that is characteristic of prior systems and which results from complete mixing and complete superimposition of the image from the video camera onto the background image scene.

In the system of the present invention the booth is provided with a backdrop located directly behind the performer's head and in alignment with the video camera, the one-way mirror, the viewing screen, and the performer's head. This backdrop is a uniformly colored surface located within the occupant enclosure of the booth and lying parallel to the viewing screen. The backdrop is in alignment with the camera viewing axis and provides a neutral backdrop image from the video camera that contrasts sharply with the image from the video camera of the booth occupant, who is located between the backdrop surface and the viewing screen.

The central processing system of the invention not only superimposes the image from the video camera onto the image of the background scene, but also filters out all portions of the background scene image except those portions that coincide in location with the image of the backdrop surface. That is, the processing system passes to the recording apparatus the image of the karaoke performer to the exclusion of the portion of the backdrop scene image located directly in line with the karaoke performer. As a consequence, in the finished recording the karaoke performer appears to be performing in front of the background scene, rather than as a phantom image superimposed upon the background scene, as in conventional, self-operated karaoke recordation systems.

In preparing for the recording session the user selects from among various alternatives an audio sound track to be played. This sound track typically involves karaoke music and will normally be coordinated with the background scene that will appear behind the user's image. That is, for example, if the performer selects a musical selection that is normally associated with Paris or French music, the performer may select as a background a Parisian street scene with the Eiffel Tower or Arch of Triumph shown in the background. The user then performs karaoke, singing along with the music of the selected karaoke composition.

The booth is operated by the deposit of money in the usual manner of self-operated, automatic purchasing machines. That is, the booth provides a control panel that includes an apparatus for receiving and checking the validity and amount of currency, rendering change where appropriate, and initiating actuation of the system.

A very important feature of the invention is the provision of a system for displaying lyrics for the karaoke selection directly at the center of the viewing screen. This is done by directing images of the lyrics of the karaoke selection into the center of the screen of the video display device. These images are then projected vertically onto the reflective surface of the one-way mirror, and reflected therefrom horizontally through the center of the viewing screen. The images of the lyrics are not directed to the audio and video recording apparatus, however.

By projecting the images of the karaoke selection lyrics onto the center of the video screen, eye contact of the performer remains directed at the center of the viewing screen which is in direct linear alignment with the viewing axis of the video camera. This further ensures that the performer looks directly into the lens of the video camera during the performance, so that the resultant recordation of the performance is more polished and pleasant to watch.

Preferably the system of the invention allows the performer to select from among different audio and video recording media. For example, the performer may elect to record the performance on an audio/video compact disc. Alternatively, the performer may wish for the recorded performance to be recorded on conventional video tape that can be played in a video cassette player. Also, the performer may elect to record the performance on both video tape and on a compact disc. The system of the invention is preferably configured to accommodate all of these choices.

A further preferred feature of the invention allows a performer to hear a sample of the selected karaoke song and make any adjustment to the tone of the song to better adapt the music of the song to the performer's personal vocal range prior to commencement of the actual recordation. As a result, problems in attempting to reach vocal notes beyond the performer's vocal range are minimized. This results in a significantly more professional and more polished recordation.

The system preferably provides a capability for review following conclusion of the soundtrack. That is, the user can play back the audio and composite video images that have been recorded. If the user wishes, a selection can be made to purchase the compact disc and/or VCR cassette that has been produced and thereby have a permanent record of the performance. Alternatively, if the user is not satisfied an election can be made not to purchase the compact disc or video tap cassette that has been produced. Thereafter, the user exits the booth.

Preferably also the karaoke recording system of the invention includes the provision of a printed label which can be dispensed for application to the VCR cassette or CD upon which the performance is recorded immediately before, after, or concurrently with dispensation of the cassette or CD. In conventional systems the performer obtains an unlabelled video cassette or CD, which is thereafter difficult to identify. By providing a system for printing an appropriate label right at the time that the performance is recorded, the user is able to immediately label the CD or video tape cassette so that it can thereafter be readily identified.

In one broad aspect the present invention may be considered to be an improvement in an automated, self-operated karaoke recording system for recording a video and audio karaoke performance by a karaoke performer. Such a system includes a video camera trained upon the karaoke performer, a video display observable by the karaoke performer, an audio selection karaoke storage device for electronically storing a plurality of alternatively selectable karaoke musical compositions that include both music and lyrics, karaoke selection audio and video recordation equipment coupled to the karaoke storage device, and a central processor system. The central processor system controls recordation of a performance by the karaoke performer of a selected one of the karaoke musical compositions with video images of the karaoke performer from the video camera projected onto images of a video background.

According to the improvement of the invention, a one-way mirror is located between the performer and the video camera. The one-way mirror has a reflective face directed toward the karaoke performer and the video display and a nonreflective face directed toward the video camera.

Preferably the system also includes a video background storage device for electronically storing a plurality of alternatively selectable background image scenes. Some means is provided for selecting from the video background storage device a single one of the selectable background scenes as a chosen background scene. Also, a uniformly colored backdrop surface is preferably located behind the karaoke performer opposite the one-way mirror and in visual alignment with the karaoke performer and the video camera. The video camera thereby produces backdrop images that contrast sharply with images of the karaoke performer.

The computer system includes some means that masks the images of the video background with the images from the video camera and passes from the video camera to the video display and to the audio and video recordation equipment only images of the karaoke performer. The images of the backdrop are suppressed. Also, the system passes from the background storage device to the video display and to the audio and video recordation equipment only those portions of the chosen background image scene that coincide in location with the suppressed images of the backdrop. The resultant images that are displayed to the performer and which are recorded in the audio and video recording equipment thereby avoid the double exposure or phantom effect characteristic of conventional, self-operated karaoke recording devices.

In another broad aspect the invention may be considered to be an improvement in an automated, self-operated karaoke recording system for recording a video and audio karaoke performance of the type described which includes a musical composition selector operable by the karaoke performer to select a single one of the karaoke musical compositions as a chosen karaoke composition, and a karaoke player for playing the music of the chosen karaoke composition.

In this system a one-way mirror is located between the performer and the video camera, wherein the one-way mirror has a reflective face directed and inclined toward both the karaoke performer and toward the video display. The one-way mirror has an opposite, nonreflective face directed and inclined toward the video camera. In this way the video camera, the karaoke performer, and the center of the one-way mirror are in linear alignment with each other. As a result, the video display is observable only indirectly by the karaoke performer as reflected from the one-way mirror. A lyric mode selector is operable by the karaoke performer to alternatively elect between display and suppression of display of lyrics of the chosen karaoke composition.

A lyric display control means in the computer system directs images of the lyrics of the chosen karaoke composition toward the center of the video display in synchronism with playing of the music of the chosen karaoke composition by the karaoke player, provided that the performer has not elected to suppress display of the lyrics. Since the lyrics are displayed directly in the center of the video display, they are reflected into the center of the viewing screen and into alignment with the viewing axis of the video camera. As a consequence, as the performer views the lyrics the eyes of the performer look directly at the lens of the video camera.

The invention may be described with greater clarity and particularity by reference to the accompanying drawings.

DESCRIPTION OF THE DRAWINGS

FIG. **1** is a perspective view of a personalized karaoke recording studio according to the invention.

FIG. **2** is a block diagram of the operating components of the recording studio of FIG. **1**.

FIG. **3** is a flow diagram of the steps of operation of the central processing system as it interacts with the other components of the invention in choosing a selection and background, sampling of the music, and recordation of a chosen karaoke selection.

DESCRIPTION OF THE EMBODIMENT

FIG. **1** illustrates a personalized karaoke recording studio indicated generally at **10**. The recording studio **10** is a booth formed generally in the shape of a rectangular prism, as illustrated, having walls **12**, a floor **14**, a ceiling **16**, and a door **20**. All of these enclosing panels have a sound deadening construction so as to insulate the booth from ambient, external noise.

Because the booth **10** is likely to be located in relatively noisy areas, it is extremely important for the walls **12**, the floor, **14**, the ceiling **16**, and the door **20** to be very well-insulated for sound. This can be achieved by constructing each of these surfaces from sheets of acrylic three-quarters of an inch in thickness, or constructing them of double-pane glass. Each pane of glass is three-sixteenths of an inch thick and the panes are separated from each other by a dead air space of one-half an inch in width.

The interior of the booth **10** includes a vertically oriented control panel **22** that extends the height of the booth **10** from the floor **14** to the ceiling **16** thereof. The control panel **22** is oriented parallel to the door **20**, when the door **20** is in its closed position. The control panel **22** divides the sound-insulated booth **10** into an occupant enclosure **24** that is large enough to accommodate a human occupant **21** and an equipment enclosure **26**.

A clear acrylic viewing screen **28** is located in the control panel **22** at the normal eye level of a human occupant **21** located in the occupant enclosure **24**. A video camera **30** is located in the equipment enclosure **26** and is directed at the center C of the viewing screen **28** along a straight, linear, horizontal viewing axis **32**.

A rectangular, uniformly colored backdrop surface **34** is located within the occupant enclosure **24** and is mounted on the upper portion of the inside surface of the door **20** so that it resides in alignment with the camera viewing axis **32**. The backdrop surface **34** may, for example, be dark blue in color and provides a uniform, neutral backdrop image from the

video camera **30** that contrasts sharply with an image of a booth occupant **21**. The booth occupant **21** is located between the backdrop surface **34** and the viewing screen **28**.

A one-way mirror **36** having a reflecting face **38** and an opposing nonreflecting face **40** is located in the equipment enclosure **26** and is oriented at a forty-five degree angle relative to the camera viewing axis **32**. The nonreflecting face **40** of the one-way mirror **36** is exposed to the video camera **30**. The reflecting face **38** of the one-way mirror **36** is exposed to the viewing screen **28**. Also, a video display monitor **42** is located in the equipment enclosure **26**. The video display monitor **42** may be a conventional television or computer monitor, the screen of which is oriented in a horizontal plane so that it also resides as an acute angle of forth-five degrees relative to the one-way mirror **36**. The video display monitor **42** faces the reflective face **38** of the one-way mirror **36**.

With the arrangement of the video camera **30**, the viewing screen **28**, the backdrop **34**, and the video display monitor **42**, images displayed on the video display monitor **42** are visible to the booth occupant **21** in the occupant enclosure **24** as a reflection from the reflecting surface **38** of the one-way mirror **36** through the viewing screen **28**. At the same time, the video camera **30** is concealed from the view of the booth occupant **21** by the one-way mirror **36**.

The invention includes other components that are located on the control panel **22** or in the occupant inclosure **24**. Specifically, a conventional audio microphone **44** is located in the occupant enclosure **24**. The microphone **44** may be provided with a cord of sufficient length to allow the booth occupant **21** some freedom of movement. Alternatively, the microphone **44** may be fixed in position so that the booth occupant **21** does not inadvertently bring the microphone into the field of view of the video camera **30**.

The booth **10** is also equipped with an audio speaker system that can be heard in the occupant enclosure **24**. Preferably a base speaker **46** is located near the bottom of the control panel **22**, while mid range or tweeter speakers **48** are located in the upper corners of the control panel **22**.

The booth **10** is also provided with a conventional money scanner **50** having a currency insertion slot **52** located in the control panel **22**. The money scanner **50** may be any conventional currency scanning and verification device, such as the model AL4 Bill Acceptor or Bill Validator distributed by Mars Electronics International located at 1301 Wilson Drive, West Chester, Pa. 19380.

A compact disc recorder **54** and an VCR recorder **56** are mounted side-by-side in the control panel **22** within the equipment enclosure **26**. Each of the recorders **54** and **56** is of a conventional design adapted, respectively, to record audio and video signals on a compact disc or on the tape of a video tape cassette. The compact disc recorder **54** may be a Model HPCD-Writer Plus 72001 distributed by CompUSA, while the video cassette recorder may be a Panosonic, Sony, JVC, or any other popular video tape recorder available from any number of sources. One suitable video cassette recorder is the Premier 99 model manufactured by Hundai and distributed by Sing Young Music World, located at 18438 Colima Road, Unit 105, Rowland Heights, Calif. 91748. The CD recorder **54** has a CD insertion slot **58** that receives a conventional, recordable compact disc **55** therein. Similarly, the video cassette recorder **56** has a slot **60** adapted to receive a conventional video tape cassette **57** to be recorded.

The CD recorder **54** includes a dispenser mechanism for ejecting a CD **55**, with an audio and video karaoke recordation thereon at the conclusion of a karaoke performance. Similarly, the video cassette recorder **56** includes a dispenser for ejecting the video cassette **57** upon which a karaoke performance has been recorded at the conclusion of the performance from the recorder **56** into the occupant enclosure **24**.

A compact disc and VCR tape dispenser **62** is also located in the equipment enclosure **26** and is mounted in the control panel **22**.

The CD and VCR tape vendor **62** contains a supply of units of different types of audio and video recordation medium articles. Specifically, the CD/VCR tape vendor **62** contains a supply of unrecorded CDs and a supply of unrecorded video tape cassettes **57**. The central processing unit **76** is programmed to also serve as a means for selecting at least one of the different types of video recordation medium articles, namely the CDs **55** or the video tape cassettes **57**, responsive to an input from the occupant input selection keyboard **66**. The central processing unit **76** is also programmed to operate the audio and video recorders **54** and **56** to record on a single CD **55** and/or a single video tape cassette **57** each selected type of audio and video recordation medium article.

That is, the user, using the keyboard **66** and responsive to a query from the central processing unit **76** that is displayed by the video display monitor **42**, may elect to record a karaoke performance on either a CD **55**, a VCR tape cassette **57**, or both a CD **55** and a VCR tape cassette **57**.

The keyboard **66** serves as a means for the performer **21** to select at least one of the different forms of audio and video recordation media, responsive to a prompt provided by the central processing unit **76**. The vendor **62**, responsive to a signal from the central processing unit **76** that is not generated until receipt of an authorization signal from the money scanner **50**, dispenses a single article of each of the selected forms of audio and video recordation media to the performer **21**. That is, if the performer has selected and paid for a CD, the vendor **62** dispenses a single, unrecorded CD **55**. If the performer **21** has selected to record his or her performance on a video tape cassette, a single, blank video tape cassette **57** is dispensed by the vendor **62**. If the performer **21** has elected to record the performance both in the form of a CD and a video cassette, and has inserted the appropriate amount of money into the slot **52** of the money scanner **50**, the central processing unit **76** commands the vendor **62** to dispense a single, blank CD **55** and also a single, blank video tape cassette **57**.

Once the CD **55** and/or video cassette **57** have been dispensed to the user **21** by the vendor **62**, the central processing unit **76** provides instructions through the video display monitor **42** and viewing screen **28** to the performer **21** to insert the dispensed CD **55** and/or video tape cassette **57** into the appropriate slot **58** and/or **60** of the CD recorder **54** and/or the video cassette recorder **56**.

Several lights **64** are mounted in the control panel **22**. The lights **64** are oriented on either side and above the viewing screen **28** to cast a soft, illuminating light on the face of the booth occupant **21**. The lights **64** should be of a quality that provides good illumination on the face of the booth occupant **21** so as to product a flattering image as viewed by the video camera **30**.

A conventional computer keyboard **66** is provided and is mounted on the control panel **22** to project outwardly into the occupant enclosure **24** to allow the booth occupant **21** to communicate various selections and information to the system in an electronically encoded form. The keyboard **66**

on the control panel **22** serves as an occupant input selection means for providing electronic occupant input signals to the system. In addition to the conventional alphanumeric keys provided in a typical, commercially available keyboard, the keyboard **66** also employs a slide switch **68** that is used to adjust the tone of karaoke selection that is played in a manner that will hereinafter be described.

The personalized karaoke recording studio booth **10** is also provide with various electronic components that are located in the equipment enclosure **26**, and which are illustrated in diagrammatic form in FIG. **2**. As shown in that drawing figure, the system includes an audio selection storage means in the form of a laser disc **70** permanently mounted in the equipment enclosure **26**. The laser disc **70** may, for example, be a Model MDP455SD manufactured by Sony Corporation and distributed by Sing Young Music World.

The laser disc **70** electronically stores a plurality of alternatively selectable musical compositions that include both lyrics and music. A hard disk **72** is also provided as a storage means for electronically storing a plurality of alternatively selectable video background displays or scenes. The hard disk **72** is also mounted in the equipment disclosure **26** and may be a Ultra/2 SCSI, 9.1 GB hard disk manufactured by Quantum Corporation.

At the heart of the system is a central processing unit **76** which should be a Pentium® I or higher CPU. The central processing unit **76** is programmed to provide a means for transmitting to the video display monitor **42** indicia of the different selectable music compositions that are stored in the audio selection storage laser disc **70**. The central processing unit **76** also is programmed to form a means responsive to the occupant input selection keyboard **66** for providing signals to the audio selection storage laser disc **70** for selecting a single one of the selectable karaoke music compositions stored on the laser disc **70**. This selected musical composition may be considered to be the chosen musical composition. The central processing unit **76** is also programmed to control an audio and video player, which is a DVD/VCD player **74** to play at least the music of the chosen musical composition from the laser disc **70** through the audio speakers **46** and **48**. The DVD/VCD player **74** is located in the equipment enclosure **26** and may be a Model DVD Encore DXR2 produced by Creative Laboratories.

The central processing unit **76** is also programmed to transmit to the video display screen **42** a choice of selecting between display and suppression of display of lyrics of the chosen musical composition from the laser disc **70**. This programmed component is indicated as a lyric display **80**, although it is actually located within the central processing unit **76**. The central processing unit **76** is also responsive to the occupant input selection keyboard **66** for providing signals to the audio and video playing DVD/VCD unit **74** to display the lyrics of the chosen musical composition at the center of the video display monitor **42**.

The central processing unit **76** also is programmed to serve as a means for transmitting to the video display monitor **42** indicia of the selectable video background displays that are stored on the hard disk **72**. The central processing unit **76** is programmed to serve as a means responsive to the occupant selection keyboard **66** for providing signals to the video background storage hard disk **72** for selecting a single one of the alternatively selectable video background scenes as a chosen video background scene. The central processing unit **76** further is programmed to serve as a means responsive to the keyboard **66** for providing signals to the audio and video playing DVD/VDC player **74** to play the chosen video background display selected from the hard disk **72**.

The central processing unit **76** is also programmed to serve as a means responsive to the occupant selection keyboard **66** for actuating the audio and video playing DVD/VCD player **74** and the audio and video recorders **54** and **56** to record audio inputs from the microphone **44** and video inputs from the video background storage hard disk **72** and the video camera **30** as images of the booth occupant **21** superimposed upon images of the chosen background scene from the hard disk **72**. These images of the chosen background scene from the hard disk **72** are masked by the images of the booth occupant **21** on the audio and video recordation articles, namely the CDs **55** and the video cassettes **57**.

The personalized karaoke recording studio booth **10** also includes a label printer **82** located in the equipment enclosure **26**. The label printer **82** ejects printed labels **88** through an ejection slot **84** located in the control panel **22**. The label printer **82** is provided with a strip of labelling stock **86** in the form of a roll of paper, one side of which is coated with a pressure-sensitive adhesive covered with a release film backing.

The central processing unit **76** is programmed to serve as a means for transmitting to the video display monitor **42** a message notifying the human occupant **21** of the availability of a customized label for the recordation medium article, namely the CD **55** or the video tape cassette **57**. The message to the human occupant **21** also provides samples of the choices of the selection of different print font styles available. The central processing unit **76** is also programmed to serve as a means responsive to the occupant selection keyboard **66** to actuate the printer **82** to print a customized label **88** on a portion of the labelling stock **86** and separate it from the remainder thereof and dispense it into the occupant enclosure **24** through the label dispensing slot **84**.

The central processing unit **76** is also programmed to serve as a means for transmitting to the video display monitor **42** a choice of selection of different print font styles to the human occupant **21**. The central processing unit **76** is also programmed to serve as a means response to the occupant selection keyboard **66** to display to the human occupant **21** on the video display monitor **42** the appearance of labeling information provided by the occupant **21** through the occupant selection keyboard **66**. This display on the video display monitor **42** allows the occupant **21** to make changes in the labeling information by deleting and backspacing using the keyboard **66** prior to actuation of the printer **82**. The occupant **21**, may observe the appearance that the label **86** will have prior to printing by the projection of an image thereof from the video monitor **42** on the viewing screen **28** as reflected by the one-way mirror **46**. When satisfied, the occupant **21** presses the enter key on the keyboard **66** to actuate the printer **82**. The printer **82** thereupon prints the labelling information as instructed and separates the label **88** from the label stock **86** and dispenses it into the occupant compartment **24** through the printer label dispensing slot **84**.

The central processing unit **76** is also programmed to serve as a means for actuating the audio and video DVD/VCD player **74** to play a selected portion of the music of the chosen musical composition selected from the karaoke musical compositions stored on the laser disc **70** through the audio speakers **46** and **48** prior to actuation of the audio and video recorders **54** and/or **56**. When this selected portion of

the music is played, the booth occupant **21** may adjust the audible tone of the music to the speakers **46** and **48** and to the audio and video player **74** and to the audio and video recorders **54** and **56** prior to actuation of the audio and video recorders **54** and **56**. This adjustment is performed on the occupant selection keyboard **66** by means of the slide switch **68**.

Movement of the slide switch **68** designates a degree and direction of desired change in audio tone so that the tone of the music being played more readily accommodates the voice range of the booth occupant **21**. The central processing system **76** alters the tone of the music of selected musical composition chosen from the laser disc **70** that is transmitted to the audio and video player **74** and to the audio and video recorders **54** and **56** for playing the music of the selected karaoke musical composition and recording the performance thereof.

The operation of the karaoke recording system **10** depicted in FIGS. **1** and **2** may be described with reference to the flow diagram of FIG. **3**.

Upon entering karaoke recording studio booth **10** the booth occupant **21** is presented with a start screen **100** projected from the video monitor **42** through the viewing screen **28** as reflected by the one-way mirror **36**. The start screen **100** contains initial instructions to the booth occupant **21**. Specifically, the central processing unit **76** first detects whether or not the door **20** of the booth **10** has been closed. If it has not, it transmits a message to the video monitor **42** instructing the booth occupant **21** to close the door **20**. This is necessary in order for the booth **10** to be adequately soundproofed and to bring the backdrop **34** into proper position in linear alignment along the viewing axis **32** with the video camera **30**, the one-way mirror **36**, and the viewing screen **28**. Closure of the door **20** is electronically detected by a conventional sensor (not shown) which provides a corresponding signal to the central processing unit **76**.

The central processing unit **76** thereupon brings the lights **64** up to the proper light level to fully illuminate the face of the booth occupant **21**. At this time the central processor unit **76** provides a message to the booth occupant **21** asking the booth occupant **21** to select the format of the article upon which a karaoke performance is to be recorded. That is, a message asks the booth occupant **21** to select either the CD format, the video tape cassette format, or both by depressing specified keys on the keyboard **66** and then pressing the enter key. Once the booth occupant **21** has made this selection, the information is processed by the central processing unit **76**.

A message is thereupon generated and transmitted to the video display monitor **42** informing the customer of the exact amount of money necessary to proceed. The booth occupant **21** thereupon inserts the exact amount of currency into the money scanner **50**. The money scanner **50** tabulates the currency as it is being inserted into the slot **52** and sends corresponding signals to the central processing unit **76**. The central processing unit **76** transmits messages to the video display monitor **42** at step **102** advising the customer as to the remaining amount of money that must be inserted into the slot **52**. Once the total amount necessary has been inserted into the slot **52** and the money scanner **50** has verified the authenticity of the currency, the money scanner **50** signals the central processing unit **76** to proceed.

The central processing unit **76** thereupon sends a signal to the CD/VCR tape vendor **62** at step **104** to eject the correct articles for recordation of the karaoke performance. That is, the central processing unit **76** signals the CD/VCR tape vendor **62** to dispense either a CD **55**, a VCR tape cassette **57**, or both if both have been selected and paid for by the user. Without such a CD/VCR tape vending system the booth occupant **21** would be forced to plan ahead and bring a blank CD or video tape cassette to the booth **10**. This would greatly increase the inconvenience to the customer and reduce the extent to which the karaoke recording system of the invention would be utilized. Accordingly, the dispensation of blank articles upon which karaoke performance can be recorded represents a very significant convenience to the customer.

A blank CD **55**, a blank video tape cassette **57**, or both, are dropped into the dispensing tray of the CD/VCR tape vendor **62**. The ejection of the selected article or articles provides a signal from the vending unit **62** to the central processing unit **76**, which thereupon sends a message at step **106** to the video display monitor **42** advising the booth occupant **21** to insert the CD **55**, the video tape cassette **57**, or both, into the appropriate recorder slots **54** and **60**. Once the CD **55** and/or video tape cassette **57** have been inserted into the appropriate recorder **54** or **56**, the central processing unit **76** provides a message to the booth occupant **21**, through the video monitor **42** as a step **108**, requesting the booth occupant **21** to make the selection of a musical composition. This selection may be made in several ways. If the customer **21** knows the exact title of the musical composition that he or she wishes to perform, the customer merely types in the title, presses the enter key, and the central processing unit **76** will thereupon check the library of the laser disc **70** and proceed with the next steps in recordation. If the title chosen by the customer **21** is not among the selections stored in the laser disc **70**, the customer **21** will be so advised and requested to make a different selection.

Selections may also be made by different categories of music. That is, once the central processing unit **76** has verified that the correct amount of money has been received the message to the customer **21** that is displayed on the viewing screen **28** also includes different categories of music, such as rock music, traditional music, oldies, country music, and possibly other categories. The customer **21**, through an appropriate selection on the keyboard **66**, may select any one of these categories. The central processing unit **76** thereupon proceeds to present the customer **21** with a listing of tides within the selected category. The customer **21** may scroll through this list using the arrow keys on the keyboard **66** until an available selection has been highlighted. The customer **21** thereupon makes his or her selection my pressing the enter key on the keyboard **66**.

The central processing unit **76** thereupon presents a message at step **110** in FIG. **3** requesting from the customer **21** a selection of background scenes from among those different background scenes stored on the hard disk **72**. The customer makes a selection of scenes which may, for example, include such background scenes as an ocean view, a lively street scene, a desert scene, and possibly other varied but reasonable different background scenes. The customer thereupon performs the selection. The central processing unit **76** thereupon displays the initial frame of the video scene selected from the hard disk **76** on the video display monitor **42** so that the customer **21** can verify that the scene selected is the desired background against which the customer wishes to perform the karaoke selection. This is verified by an input to the keyboard **66** indicated at **112** in FIG. **3**.

The central processing unit **76** thereupon proceeds to actuate the player **74** to play a sampling of the music from the chosen karaoke selection from the laser disc **70** on the

speakers **46** and **48**. This step is indicated at **114** in FIG. **3**. At the conclusion of the music sample for a predetermined time, the central processing unit **76** then presents a message to the customer **21**, indicated at **116** in FIG. **3**, asking the customer **21** whether or not the chosen karaoke selection is correct. If so, the central processor **76** presents a message, indicated at **118** in FIG. **3**, advising the customer **21** of the possibility of adjusting the tone of the music of the chosen karaoke selection to conform to the voice range of the customer **21**, who at this point may be considered to be a performer. The performer **21** may thereupon adjust the tone of the music, which continues for about thirty seconds, utilizing the slide switch **68**. In the meantime the performer **21** will typically be practicing along with the music to verify an ability to match the notes at the tone being played. This is indicated at step **120** in FIG. **3**.

At this point the performer **21** is provided with a message from the central processor unit **76** advising the performer **21** to assume a proper position so that the eye level of the performer **21** is vertically adjusted to the elevation of the center C of the viewing screen **28**. This may be accomplished by the display of a message to the performer **21** which is reflected to the vertical center C of the screen **28** advising the performer **21** that his or her eye level should coincide with the level of the message being displayed. The booth **10** may be provided with a stool or chair **122** having an adjustable height to allow the performer **21** to be seated comfortably with eyes at a vertical level equal to the vertical level of the center C of the viewing screen **28**.

Once the performer **21** is properly positioned, as instructed by the message reflected through the viewing screen **28**, the performer's eyes **21** will be directed straight into the lens of the video camera **30**. However, the video camera **30** is not visible to the performer **21**, since it is located behind the nonreflective face **40** of the one-way mirror **36**. Nevertheless, the eyes of the performer **21** are thereupon located directly on the axis of camera alignment **32** with the neutral background **34** located directly behind the performer's head.

Once the performer **21** has provided an input through the keyboard **66** signalling a readiness to proceed the central processing unit **76** displays a message on the video display monitor **42** asking whether or not the performer **21** wishes for the lyrics of the chosen karaoke selection to be displayed while the music is being played. This is indicated at step **121** in FIG. **3**. In this connection the central processing unit **76** serves as a lyric mode selector operable by the karaoke performer **21** to alternatively elect between display and suppression of display of lyrics of the chosen karaoke composition.

The performer **21** indicates a decision in this regard through an input to the keyboard **66**. If the performer **21** knows the lyrics of the chosen karaoke composition by heart, the performer **21** may not wish to have the lyrics displayed while the music of the chosen karaoke composition is being played. In this case display of the lyrics is suppressed. On the other hand, the performer **21** may wish to see the lyrics displayed while the music of the selected karaoke composition is being played.

The central processing unit **76** includes a lyric display control means which, when actuated, directs images of the lyrics of the chosen karaoke composition toward the center of the video display monitor **42** in synchronism with playing of the karaoke composition by the karaoke player **74**. Unlike conventional, self-operated karaoke recording systems, the personalized karaoke recording studio **10** of the invention does not display the lyrics in a line running across the bottom of the video display monitor **42**, as this would result in the diversion of the eyes of the performer **21** from the video camera axis of alignment **32**. Rather, if the performer desires the lyrics to be displayed, they are displayed at the center of the video display monitor **42**, and hence also at the center C of the viewing screen **28** on or very close to the video camera axis of alignment **32**.

The central processing unit **76** thereupon provides the performer **21** with a visual display of a numerical countdown on the video display monitor **42**. At the termination of the countdown, the central processing unit **76** activates both the DVD/VCD player **74** and the appropriate audio and video recorder **54** and/or **56** to commence recording on the CD **55** and/or video tape cassette **57** which the performer **21** has previously inserted therein. This step is indicated at **123** in FIG. **3**. Actuation of the recorders **54** and **56** is under the control of the money scanner **50**, which indicates the proper recorder or recorders to be actuated.

The option to display or suppress display of the lyrics has several advantages over conventional, self-operated karaoke recording systems. If the performer knows the words to the song, display of the lyrics can be suppressed and the performer is able to observe his or her image from the video camera **30** as the performance is actually conducted. This is not only more fun for the performer **21**, but also allows the performer **21** to instantaneously change or modify a performance, thereby producing a more polished product. On the other hand, if the performer **21** needs to see the lyrics during the performance, the lyrics will appear in a small area in the center C of the screen directly in front of the hidden video camera **30**. By not having the lyrics running along the bottom of the screen, the performer **21** can maintain a more professional appearance by maintaining eye contact with his or her own image, thereby looking directly into the lens of the video camera **30**.

During the performance the DVD/VCD audio and video player **74** plays the selected, chosen musical composition from the karaoke storage laser disc **70** by playing the music thereon so that it is audible to the performer **21** through the speakers **46** and **48**. If display of the lyrics has been elected, the central processing unit **76** projects images of the lyrics of the selected musical composition sequentially onto the video display monitor **42** so that they are transmitted to the central region located near the center C of the one-way mirror **36** in synchronism with the audible music of the selected musical composition.

As indicated in FIG. **2**, several events occur concurrently during the performance of the chosen karaoke selection. Specifically, a number of different inputs are fed to an audio/video mixer **124**. The music of the selected karaoke composition is transmitted as an audio signal from the audio and video player **74** shown diagrammatically in FIG. **2**. Concurrently, the chosen background scene selected from the hard disk **72** is also transmitted by the DVD/VCD player **74**. The chosen background scene is typically a moving scene formed of a number of sequential frames of the selected background subject. At the same time the video image from the video camera **30** is transmitted to the audio/video mixer **124**. At the same time, the vocal performance of the performer **21** is transmitted as an audio signal from the microphone **44** through an echo circuit **132** and an audio amplifying circuit **134** to the audio/video mixer **124**.

As previously noted, the uniformly colored backdrop **34** is located directly behind the performer **21** and in linear alignment with the video camera **30**, the one-way mirror **36**,

and the performer **21**. The video camera **30** produces images of the backdrop **34** that are electronically distinguishable from the images of the performer **21** by means of an audio video mixer **124** which serves as a filter. The audio video mixer **124** combines the images from the video camera **30** and the selected image scene from the video storage background hard disk **72** such that the video images from the video camera **30** are superimposed upon the image scene from the hard disk **72**.

The audio video mixer **124** employed may be a digital audio video mixer, Model WJ-MX20, manufactured by Panasonic Broadcast and Television Systems Company. One function of the audio video mixer **124** is to provide a chroma key. The chroma key performs the process of replacing portions of one video signal with another by replacing those portions of the first video signal having a certain color range with corresponding portions of a second video signal. The audio video mixer **124** electronically filters from the selected background image scene from the hard disk **72** all portions thereof except those upon which the images of the backdrop **34** are superimposed. Since the entire area surrounding the head and upper body portion of the performer **21** will appear as images of the backdrop to the video camera **30**, it is these areas of the background scene from the hard disk **72** that are passed from the audio video mixer **124** to the capture card **136**.

The audio video mixer **124** also mixes the two video signals in desired size proportions to produce the output video signal. The audio video mixer **124** also mixes the two selected audio sources at a selected ratio with the mix/wipe control.

The capture card **136** may be a Wave Watcher TV-PCI capture card manufactured by AITech International Corporation. The function of the capture card **136** is to view and capture video on the fly and to play video tapes, laser discs, or AVI files on the central processing unit **76**. An AVI (Audio Video Interleave) file is a standard format for storing images. It operates from a Microsoft platform that is independent for multimedia files. The capture card **136** takes advantage of the sound card in the central processing unit **76** to add CD quality audio to the displayed or captured video. The still frame and full motion video formats employed in the capture card **136** are ideal for incorporation into the personalized karaoke recording studio of the invention.

The capture card **136** takes the information transmitted to it and transforms that information into a digital format or language understandable to the hard drive in the central processing unit **76**. This digitized information is then passed to the central processing unit **76**. The portion of the backdrop **34** directly behind the performer **21** is not visible to the video camera **30**. Therefore, the area of the chosen background scene from the hard disk **72** upon which the image of the performer **21** is superimposed is filtered out of the image information transmitted from the capture card **136** to the central processing unit **76**.

As a consequence, the resultant image transmitted from the capture card **136** to the central processing unit **76** is an image of the performer **21** that masks that portion of the chosen background scene from the hard disk **72** that lies directly behind the performer **21**. The image of the performer **21** therefore does not appear as a double exposure or phantom image on top of the chosen background scene, but rather appears to be an image of the performer **21** performing in front of the chosen background scene.

The filtered image from the capture card **136** is transmitted by the central processing unit **76** to a temporary storage area in the hard disk **72**. Once the performance has been completed the temporarily stored data on the hard disk **72** is transmitted by the central processing unit **76** to the appropriate recorder **54** and/or **56**. The audio input from the microphone **44** is likewise transmitted through the capture card **136** to the central processing unit **76**. It also is temporarily stored on the hard disk **72**. At the conclusion of the performance the temporarily stored audio date is also transmitted by the central processing unit **76** to the audio portion of the recording medium article **55** and/or **57** by the selected recorder or recorders **54** and/or **56**.

The performer **21** will undoubtedly be aware of the approaching end of the music of the selected karaoke composition transmitted by the audio and video player **74** from the laser disk **70**. At the conclusion of the performance the central processing unit **76** will present a display at step **140** in FIG. **3** to the performer **21** through the video display monitor **42** asking the performer **21** whether or not the performer **21** wishes to make a title or provide a personal message for the performance. If not, the central processing unit **76** directs a signal at step **142** to the appropriate recorder or recorders **54** and/or **56** to eject the recorded CD **55** and/or the recorded video tape cassette **57** to the performer **21** for the performer's personal enjoyment or use as a gift.

At the conclusion of the recordation of the karaoke performance and title selection, the central processing unit **76** takes all data from temporary storage on the hard disk **72** and directs it to a MEPG converter **137**. MPEG (Moving Pictures Exports Group) is a standard for compressing full motion video. In the MEPG converter **137** the audio/video data is converted to a MEPG format which is a compressed version of the audio and video data that was stored on the hard disk **72**. The use of the MEPG converter **137** reduces the waiting period for transcribing data from the hard disk **72** to the CD-ROM or the VCR **56** to an acceptable interval. Typically the transfer of karaoke performance data from the hard disk **72** to the CD-ROM takes about three or four minutes.

If the performer **21**, through a selection on the keyboard **66**, elects to provide a title or make a personal message, the central processing unit **76** provides a signal to the performer **21** to commence making the title by means, of a video message to the performer **21** presented through the video display monitor **42**.

The title or message may be incorporated into the recorded performance in two ways. The first way is to incorporate the title or message into the beginning of the video portion of the selected karaoke musical composition. An area in the hard disk **72** is utilized for this purpose. When the user selects a title, a digitized version of the title is transmitted from the keyboard **66** through the central processing unit **76** to the hard disk **72** for temporary storage. This title is transmitted to the CD **55** and/or the video tape cassette **57** in the recorder **54** and/or **56** just before the performance data is transferred from the hard disk **72** to the recorder **54** and/or **56**.

A second way to provide the recorded performance with a title is to print out a label or labels to be affixed to the outside of the CD **55** or the video tape cassette **57**. At the conclusion of the performance the performer is provided with an opportunity to include a title or personalized message. As previously noted, the personalized karaoke recording studio **10** includes a label printer **82** in the equipment enclosure **26** that contains the strip **86** of labelling stock. The central processing unit **76** serves as a means for transmitting through the video display monitor **42** to the performer **21**

notification of the availability of a customized label **88** for the recorded CD **55** and/or the recorded video tape cassette **57**. The performer **21** is presented with a message transmitted through the display monitor **42** that allows the performer **21** to choose from among a number of different font styles. The performer **21** types in the tide and/or personal information while viewing the format on the viewing screen **28** as reflected thereto by the one-way mirror **36** from the video display monitor **42**.

A suitable label **88** prepared from instructions provided by the performer through the keyboard **66** is printed by the printer **82** and dispensed to the performer. The performer then affixes the label to the recorded CD **55** or video tape cassette **57**, which is also dispensed to the performer following recordation of the performance. The step of providing a title or inputting a personal message is indicated as step **144** in FIG. **3**.

The central processing unit **76** thereupon serves as a means responsive to the occupant selection keyboard **66** to actuate the printer **82** to print a customized label on a portion of the labelling stock **86** and separate it from the remainder thereof and dispense it into the occupant enclosure **24** in the form of a label **88**, indicated in FIG. **2**. Prior to printing and dispensation, however, the performer **21** is given an opportunity to view and edit the title or personal message typed in through the keyboard **66**. The central processing unit **76** does not command the printer **82** to print the label **88** until the performer **21** has had a complete opportunity to view the font and arrangement of the printed material that will appear on the label **88** and to edit and rearrange that material.

When the performer **21** is satisfied with the content and appearance of the title and/or personal message, as displayed through the viewing screen **28**, the performer **21** signals completion of the tide or personal message by means of a command through the keyboard **66**.

It is at this point that the central processing unit **76** directs that message to the printer **82** and the label **88** is thereupon printed and separated from the remainder of the labelling stock **86**. This step is indicated at step **145** in FIG. **3**. The printer **82** thereupon dispenses the printed recording media label or labels **82** to the performer **21** through the label printed label dispensing slot **84**. The performer **21** thereupon no manually affixes the label or labels **88** onto the CD **55** and/or the video tape cassette **57** bearing the recorded performance.

Concurrently with its command to the printer **82**, the central processing unit **76** stores the information as to which karaoke musical composition and background scene were selected, and whether a CD **55**, a video tape cassette **57**, or both were recorded. The owner or operator of the karaoke studio **10** can thereby edit out selections that are not frequently selected and substitute in replacements as desired, from time to time.

At this point the cycle is complete and the central processing unit **76** returns to the starting screen as indicated by step **148** in FIG. **3**.

Undoubtedly, numerous variations and modifications of the invention will become readily apparent to those familiar with karaoke juke boxes and recording equipment. Accordingly, the scope of the invention should not be construed as limited to the specific embodiment depicted and described herein.

We claim:

1. A personalized karaoke recording studio comprising:

a sound insulated booth;

a control panel dividing said sound insulated booth into an occupant enclosure large enough to accommodate a human occupant and an equipment enclosure;

a viewing screen located in said control panel at eye level relative to an occupant of said occupant enclosure;

a video camera located in said equipment enclosure and directed at said viewing screen along a linear camera viewing axis;

a uniformly colored backdrop surface located within said occupant enclosure parallel to said viewing screen and in alignment with said camera viewing axis to provide a neutral backdrop image from said video camera that contrasts sharply with an image of a booth occupant that is located between said backdrop surface and said viewing screen;

a one-way mirror having opposing reflecting and nonreflecting faces and located in said equipment enclosure at an acute angle relative to said camera viewing axis with said nonreflective face exposed to said video camera and with said reflective face exposed to said viewing screen;

a video display screen located in said equipment enclosure and directed toward said reflective face of said one-way mirror at an acute angle relative thereto, whereby images displayed on said video display screen are visible to said human occupant in said occupant enclosure as a reflection from said one-way mirror through said viewing screen while said video camera is concealed from said human occupant by said one-way mirror;

an audio microphone located in said occupant enclosure;

an audio speaker system that can be heard in said occupant enclosure; and

an audio and video recorder apparatus located in said equipment enclosure;

at least one modular audio and video recordation medium article located in said audio and video recorder apparatus;

audio and video playing means located in said equipment enclosure;

audio selection storage means for electronically storing a plurality of alternatively selectable musical compositions that include both lyrics and music;

video background storage means for electronically storing a plurality of alternatively selectable video background displays;

an occupant input selection means on said control panel for providing electronic occupant input signals;

a central processing system including:

(a) means for transmitting to said video display screen indicia of said selectable musical compositions,

(b) means responsive to said occupant input selection means for providing signals to said audio selection storage means for selecting a single one of said selectable musical compositions as a chosen musical composition and for controlling said audio and video playing means to play at least said music of said chosen musical composition through said audio speaker system,

(c) means for transmitting to said video display screen a choice of selecting between display and suppression of display of lyrics of said chosen musical composition,

(d) means responsive to said occupant input selection means for providing signals to said audio and video playing means to display said lyrics of said chosen musical composition at the center of said video display screen,

(e) means for transmitting to said video display screen indicia of said selectable video background displays,

(f) means responsive to said occupant selection means for providing signals to said video background storage means for selecting a single one of said alternatively selectable video background displays as a chosen video background display,

(g) means responsive to said occupant input selection means for providing signals to said audio and video playing means to play said chosen video background display,

(h) means responsive to said occupant selection means for activating said audio and video playing means and said audio and video recorder apparatus to record audio inputs of said music of said chosen musical composition and from said microphone and video inputs from both said video background storage means and said video camera as images of said human occupant superimposed on images of said chosen background display such that said images of said chosen background display are masked by said images of said booth occupant on said audio and video recordation article; and

a dispenser for ejecting said audio and video recordation medium article from said audio and video recorder apparatus into said occupant enclosure following recordation thereof.

2. A personalized karaoke recording studio according to claim **1** further comprising a label printer in said equipment enclosure, a strip of labelling stock located in said label printer and wherein said central processing system further includes:

(i) means for transmitting to said video display means a choice of notifying said human occupant of the availability of a customized label for said recordation medium article; and

(j) means responsive to said occupant selection means to actuate said label printer to print a customized label on a portion of said labelling stock, separate it from the remainder thereof, and dispense it into said occupant enclosure.

3. A personalized karaoke recording studio according to claim **2** wherein said central processing system further includes:

(k) means for transmitting to said video display means a choice of selection of print font styles to said human occupant; and

(l) means responsive to said occupant selection means to display to said human occupant the appearance of labelling information provided by said human occupant through said occupant input selection means and to make changes in said labelling information as specified through said occupant input selection means prior to actuation of said printer.

4. A personalized karaoke recording studio according to claim **1** further comprising supplies of units of different types of audio and video recordation medium articles, and wherein said central processing system further comprises:

(m) means for selecting at least one of said different types of audio and video recordation medium articles responsive to an input from said occupant input selection means and for operating said audio and video recorder apparatus to record on a single unit of each selected type of audio and video recordation medium articles.

5. A personalized karaoke recording studio according to claim **4** wherein said different types of audio and video recordation medium articles include video cassette tapes and compact discs.

6. A personalized karaoke recording studio according to claim **1** wherein said central processing system further includes:

(n) means for actuating said audio and video playing means to play a selected portion of said music of said chosen musical composition through said audio speaker system prior to actuation of said audio and video recorder apparatus; and

(o) means responsive to said occupant input selection means to adjust the audible tone of said music to said speaker system, to said audio and video playing means, and to said audio and video recorder apparatus prior to actuation of said audio and video recorder apparatus.

7. In an automated, self-operated karaoke recording system for recording a video and audio karaoke performance by a karaoke performer and including a video camera trained upon said karaoke performer, a video display observable by said karaoke performer, an audio selection karaoke storage device for electronically storing a plurality of alternatively selectable karaoke musical compositions that include both music and lyrics, karaoke selection audio and video recordation equipment coupled to said karaoke storage device, and a central processing system for controlling recordation of a performance by said karaoke performer of a selected one of said karaoke musical compositions with video images of said karaoke performer from said video camera, the improvement comprising: a one-way mirror located between said performer and said video camera, wherein said one-way mirror has a reflective face directed toward said karaoke performer and said video display and a nonreflective face directed toward said video camera.

8. A karaoke recording system according to claim **7** wherein said one-way mirror is a planar structure oriented at a forty-five degree angle relative to video camera, relative to said video display, and relative to said performer.

9. A karaoke recording system according to claim **8** further comprising: a video background storage device for electronically storing a plurality of alternatively selectable background image scenes, and a uniformly colored backdrop surface located beyond said karaoke performer opposite said one-way mirror and in visual alignment with said karaoke performer and said video camera projected onto images of a video background, whereby said video camera produces backdrop images that contrast sharply with images of said karaoke performer and said computer system includes means for selecting from said video background storage device a single one of said selectable background scenes as a chosen background scene, and video mixing means that projects images from said video camera onto images of said chosen background scene and masks said images of said chosen video background scene with said images from said video camera and passes from said video camera to said video display and to said audio and video recordation equipment only images of said karaoke performer and suppresses passage of images of said backdrop and passes from said background storage device to said video display and to said audio and video recordation equipment only those portions of images of said chosen background scene that coincide in location with said suppressed images of said backdrop.

10. A karaoke recording system according to claim **8** further comprising an audio and video player for playing a selected musical composition from said karaoke storage device by playing said music thereof so that it is audible to said performer and by projecting images of said lyrics thereof sequentially onto said video display so that they are transmitted to the center of said one-way mirror in synchronism with said music of said selected musical composition.

11. A karaoke recording system according to claim 10 further comprising: a tone adjustment system operable prior to recordation of said performance and including:

(a) means in said central processing system for playing a selected portion of said music of said selected musical composition,

(b) performer input means operable by said performer for designating a degree and direction of desired change in audio tone, and

(c) means in said central processing system for altering the tone of said music of said selected musical composition that is transmitted to said audio and video player and to said audio and video recordation equipment for playing said music of said selected musical composition and recording said performance.

12. A karaoke recording system according to claim 10 further comprising supplies of articles of a plurality of different forms of audio and video recordation media, means for selecting by said performer at least one of said different forms of audio and video recordation media, means for dispensing a single article of each of said selected forms of audio and video recordation media to said performer, and means in said audio and video recordation equipment for receiving said dispensed articles for recordation of said performance thereon.

13. A karaoke recording system according to claim 12 further comprising performer input means operable by said performer and connected to said central processing system for providing performer labeling selections to said central processing system, means for printing recording media labels in response to inputs to said central processing system of said labeling selections by said performer, and means for dispensing said printed recording media labels to said performer.

14. In an automated, self-operated karaoke recording system for recording a video and audio karaoke performance by a karaoke performer and including a video camera trained upon said karaoke performer, a video display observable by said karaoke performer, an audio selection karaoke storage device for electronically storing a plurality of alternatively selectable karaoke musical compositions that include both music and lyrics, a musical composition selector operable by said karaoke performer to select a single one of said karaoke musical compositions as a chosen karaoke composition, a karaoke player for playing said music of said chosen karaoke composition, karaoke selection audio and video recordation equipment coupled to said karaoke storage device, and a computer system for controlling recordation of a performance by said karaoke performer of said chosen karaoke composition, the improvement comprising:

a one-way mirror having a center and located between said performer and said video camera, wherein said one-way mirror has a reflective face directed and inclined toward both said karaoke performer and toward said video display and a nonreflective face directed and inclined toward said video camera, whereby said video camera, said karaoke performer, and said center of said one-way mirror are in lineal alignment with each other and whereby said video display is observable only indirectly by said karaoke performer as reflected from said one-way mirror,

a lyric mode selector operable by said karaoke performer to alternatively elect between display and suppression of display of lyrics of said chosen karaoke composition, and

lyric display control means in said computer system for directing images of said lyrics of said chosen karaoke composition toward said center of said video display in synchronism with playing of said music of said chosen karaoke composition by said karaoke player.

15. A karaoke recording system according to claim 14 further comprising a video background storage device for electronically storing a plurality of alternatively selectable background image scenes, a uniformly colored backdrop located behind said performer and in linear alignment with said video camera, said one-way mirror and said performer, whereby said video camera produces images of said backdrop that are electronically distinguishable from said images of said performer, means for combining digitized images from said video camera and digitized images of a selected background image scene from said video storage background device such that said video images from said video camera are superimposed upon said selected background image scene, and means for electronically filtering from said selected background image scene all portions thereof except those upon which said images of said backdrop are superimposed.

* * * * *