US006923746B1

(12) **United States Patent**
Skowronski et al.

(10) **Patent No.: US 6,923,746 B1**
(45) **Date of Patent: Aug. 2, 2005**

(54) **EXERCISE TREADMILL**

(75) Inventors: **Richard E. Skowronski**, Elk Grove Village, IL (US); **Kenneth F. Lantz**, Oak Park, IL (US); **Tomas F. Leon**, deceased, late of Chicago, IL (US); by **Jose A. Leon**, legal representative, Chicago, IL (US); **Donald James Alexander**, Milwaukee, WI (US); **George Kolomayets**, Chicago, IL (US); **Vincent C. Adams**, Buffalo Grove, IL (US); **Eugene B. Szymczak**, Glen Ellyn, IL (US); **Edward W. Minnich**, Palatine, IL (US); **Wade K. Totzke**, Algonquin, IL (US)

(73) Assignee: **Brunswick Corporation**, Lake Forest, IL (US)

(*) Notice: Subject to any disclaimer, the term of this patent is extended or adjusted under 35 U.S.C. 154(b) by 0 days.

(21) Appl. No.: **09/455,959**

(22) Filed: **Dec. 6, 1999**

Related U.S. Application Data

(63) Continuation of application No. 09/073,400, filed on May 7, 1998, now Pat. No. 6,095,951, which is a continuation of application No. 08/574,366, filed on Dec. 18, 1995, now Pat. No. 5,752,897, which is a division of application No. 08/254,030, filed on Jun. 3, 1994, now Pat. No. 5,484,362, which is a continuation-in-part of application No. 07/686,906, filed on Apr. 17, 1991, now Pat. No. 5,382,207, which is a continuation-in-part of application No. 07/452,885, filed on Dec. 19, 1989, now abandoned, which is a continuation-in-part of application No. 07/368,450, filed on Jun. 19, 1989, now abandoned.

(51) **Int. Cl.**[7] **A63B 22/00**
(52) **U.S. Cl.** **482/54**; 482/51
(58) **Field of Search** 482/51, 54

(56) **References Cited**

U.S. PATENT DOCUMENTS

2,315,485	A	4/1943	Jones, III
2,399,915	A	5/1946	Drake
3,319,767	A	5/1967	Breternitz et al.
3,408,067	A	10/1968	Armstrong
3,627,313	A	12/1971	Schonfeld
3,689,066	A	9/1972	Hagen

(Continued)

FOREIGN PATENT DOCUMENTS

CH	191377	8/1987
DE	38 39 391 A1	6/1989
EP	196-887 A	10/1986
FR	1432392	2/1966
FR	2616132	12/1988
FR	2 623 410	5/1989

(Continued)

OTHER PUBLICATIONS

Tapis De Marche, Tm6—Tm10—Tm18, Instructions De Service (translation enclosed).

Primary Examiner—Glenn E. Richman
(74) *Attorney, Agent, or Firm*—Michael B. McMurry

(57) **ABSTRACT**

To improve tracking, an exercise treadmill is provided with a frame including molded plastic pulleys, having an integral gear belt sprocket, an endless belt extending around the pulleys and a motor operatively connected to the rear pulley to drive the belt. The pulleys are molded out of plastic and have a diameter of approximately nine inches. A mold and method for producing large diameter treadmill pulleys having an integrally molded sprocket are also disclosed. A deck underneath the running surface of the belt is supported by resilient members. A positive lateral belt tracking mechanism is used to correct the lateral position of the belt. A belt position sensor mechanism is used in combination with a front pulley pivoting mechanism to maintain the belt in the desired lateral position on the pulleys. The exercise treadmill also includes a lift mechanism with an internally threaded sleeve engaged to vertically aligned nonrotating screws. A user display of foot impact force on the belt is also provided.

87 Claims, 20 Drawing Sheets

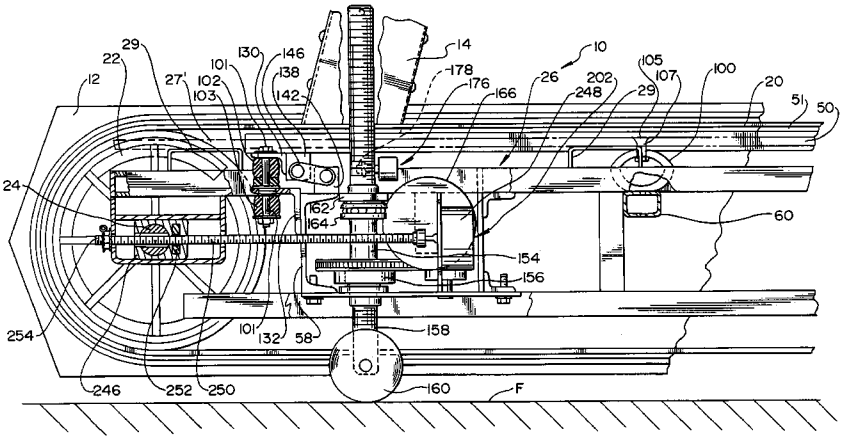

U.S. PATENT DOCUMENTS

3,703,284	A		11/1972	Hesen	
3,994,261	A		11/1976	Wedell et al.	
4,087,088	A		5/1978	Kelso	
4,334,676	A		6/1982	Schonenberger	
4,344,616	A		8/1982	Ogden	
4,350,336	A		9/1982	Hanford	
4,364,556	A		12/1982	Otte	
4,445,683	A		5/1984	Ogden	
4,544,152	A		10/1985	Taitel	
4,566,689	A	*	1/1986	Ogden	482/54
4,614,337	A	*	9/1986	Schonenberger	482/54
4,616,822	A		10/1986	Trulaske et al.	
4,635,928	A		1/1987	Ogden et al.	
4,664,371	A		5/1987	Viander	
4,687,195	A		8/1987	Potts	
4,749,181	A		6/1988	Pittaway et al.	
4,819,583	A		4/1989	Guerra	
4,842,266	A		6/1989	Sweeney, Sr. et al.	
4,844,449	A		7/1989	Truslaske	
4,981,136	A		1/1991	Chance	
4,984,810	A		1/1991	Stearns et al.	
5,072,928	A		12/1991	Stearns et al.	
5,081,991	A		1/1992	Chance	
5,279,528	A		1/1994	Dalebout et al.	
5,336,144	A		8/1994	Rodden	
5,476,430	A	*	12/1995	Lee et al.	482/54

FOREIGN PATENT DOCUMENTS

GB	2 152 825	A	8/1985
GB	2184361		6/1987
GB	2 212 729	A	8/1989
SU	546523		10/1974
SU	1256755		9/1986
SU	1248617		7/1987
SU	1321430		10/1987
SU	1347953		10/1987
WO	WO 81/01960		7/1981
WO	WO 89/07473		8/1989
WO	WO 92/11905		7/1992

* cited by examiner

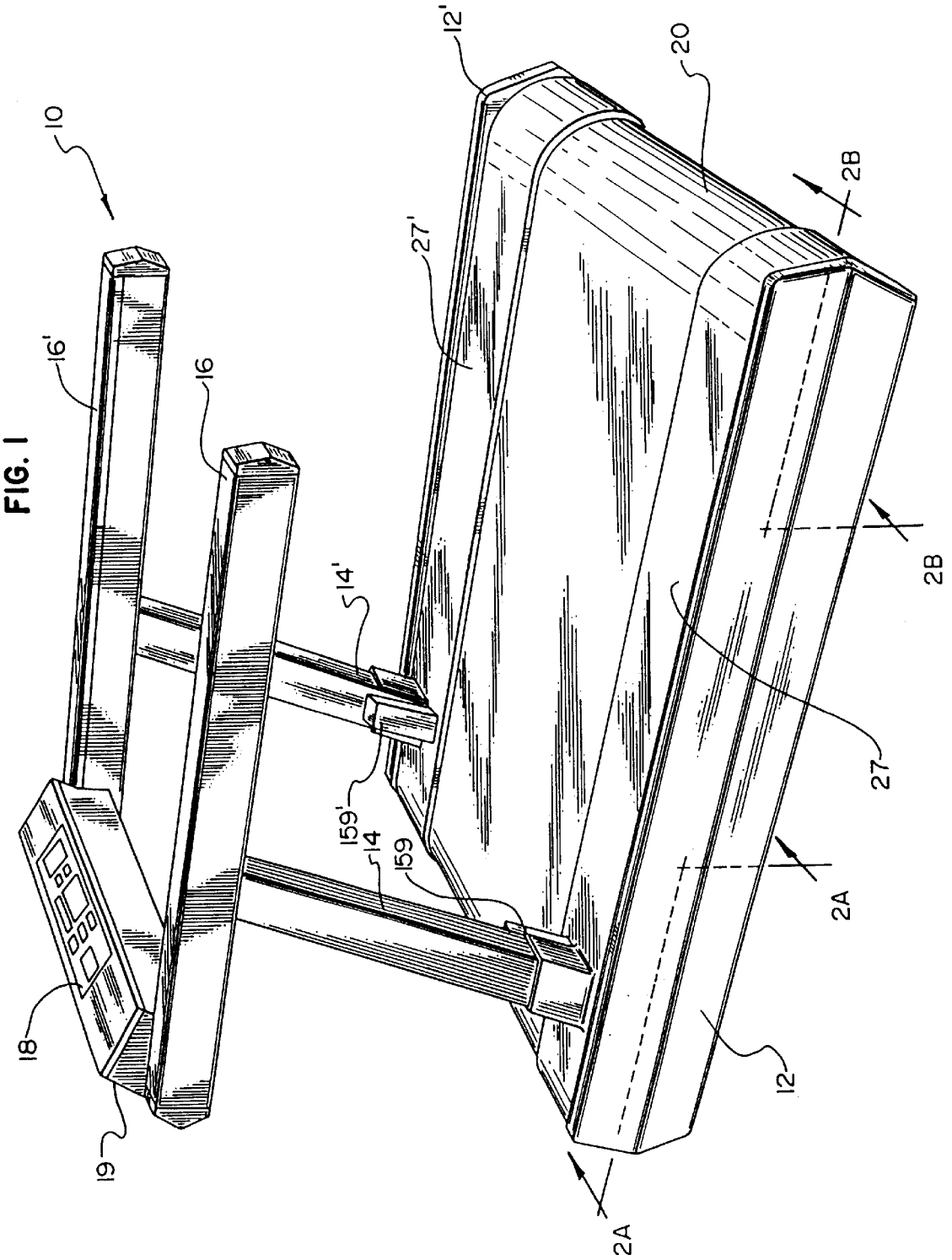

FIG. 1

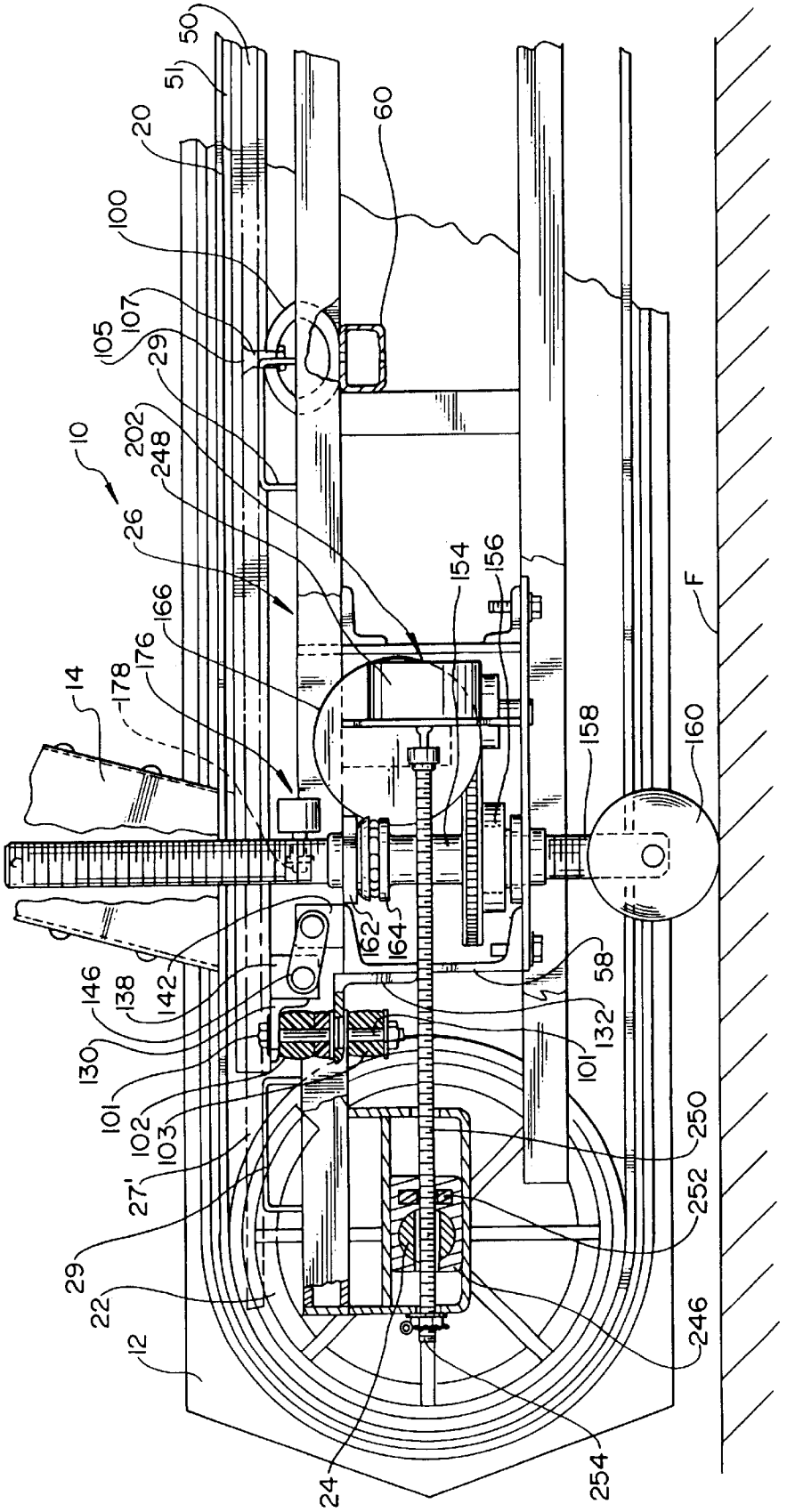
50
51
20
100
105
107
29
202
248
10
26
166
176
178
14
60
154
156
158
160
F
162
164
142
146
138
130
101
102
103
27'
29
22
12
24
254
246
252
250
101
132
58

FIG. 2A

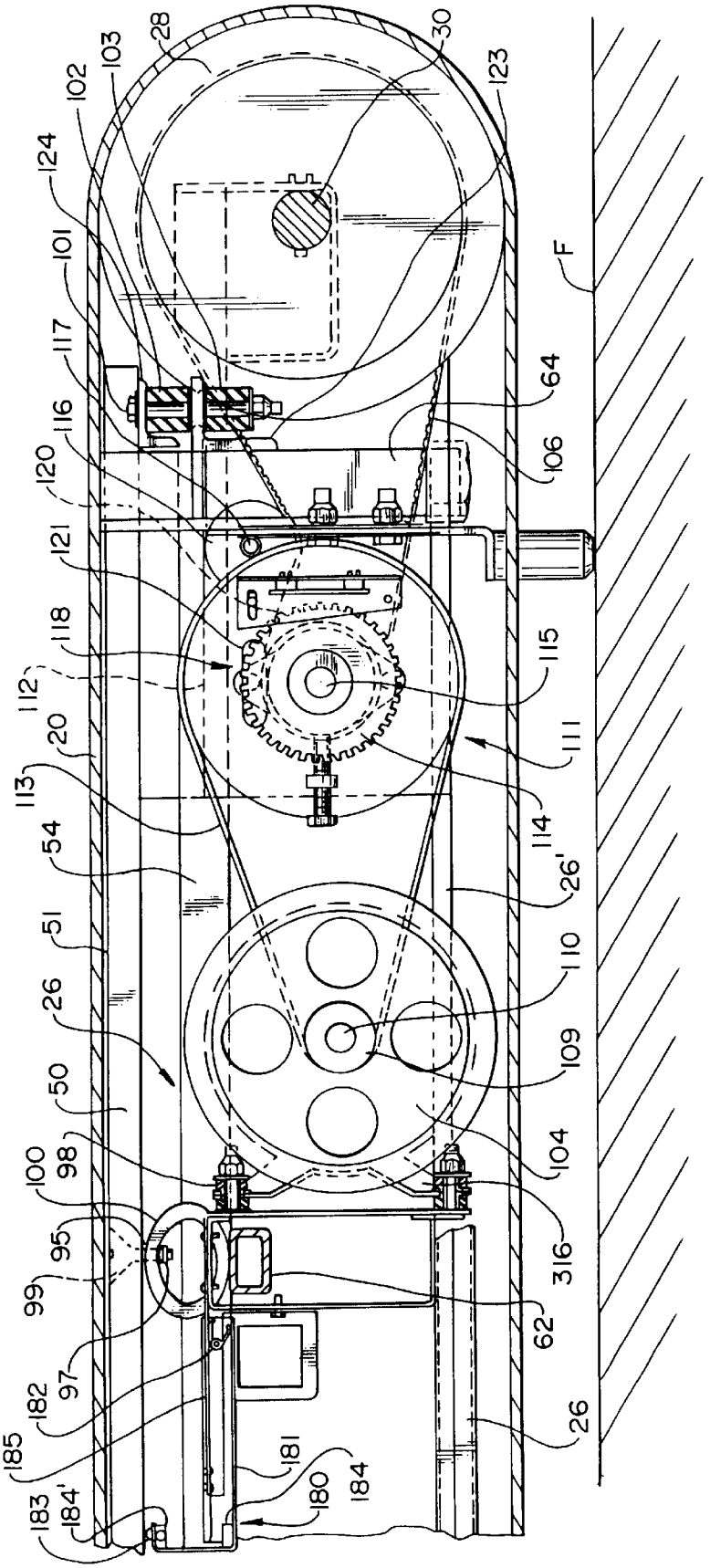
28
30
103
102
123
124
101
F
117
64
116
106
120
121
118
115
112
111
20
113
114
54
26'
51
110
26
109
50
104
100
98
316
95
99
62
97
182
26
185
181
184
180
183
184'

FIG. 2B

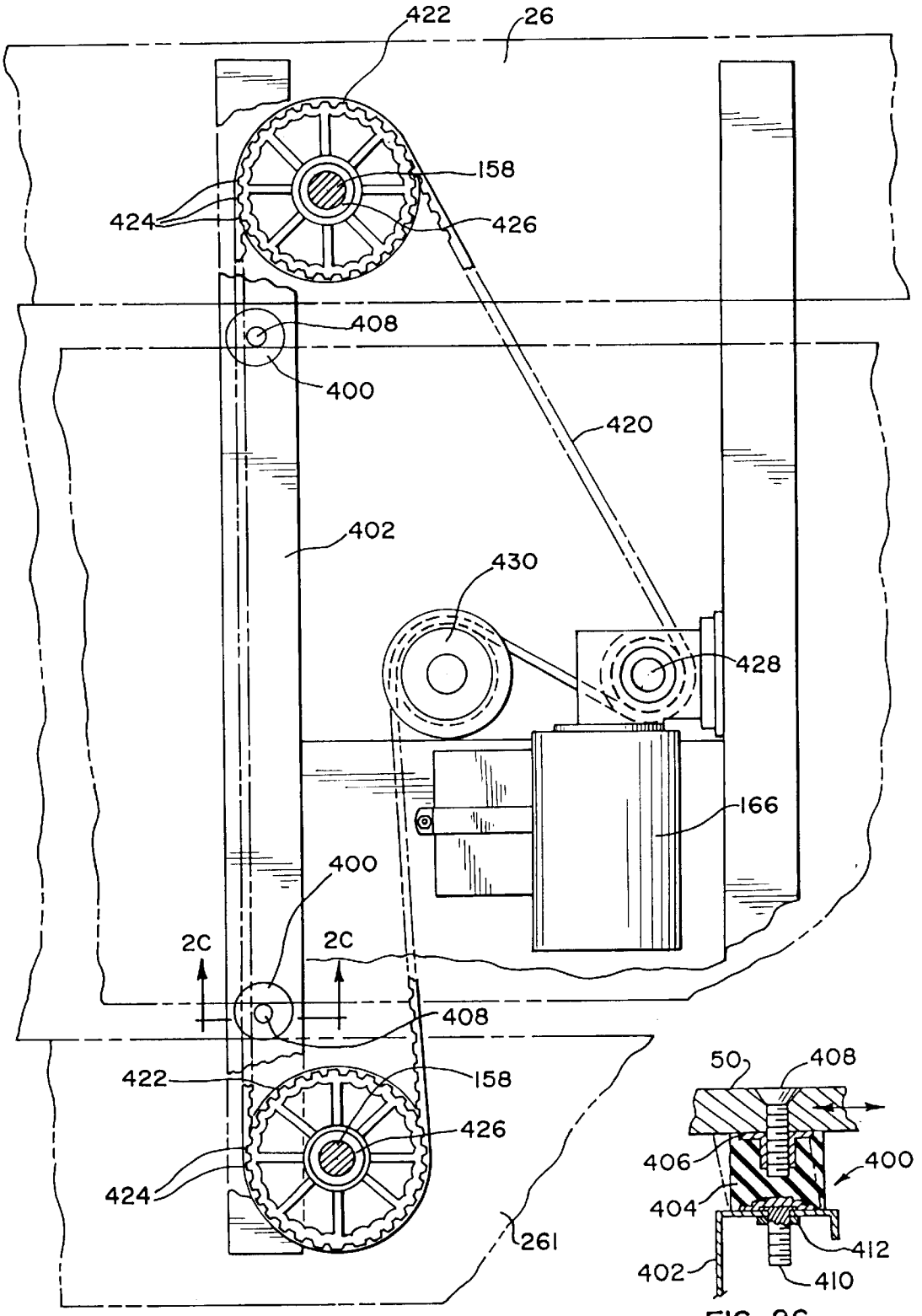
422
26
158
424
426
408
400
420
402
430
428
166
400
2C
2C
408
422
158
426
424
261

FIG. 3D

50
408
406
400
404
412
402
410

FIG. 2C

FIG. 3A

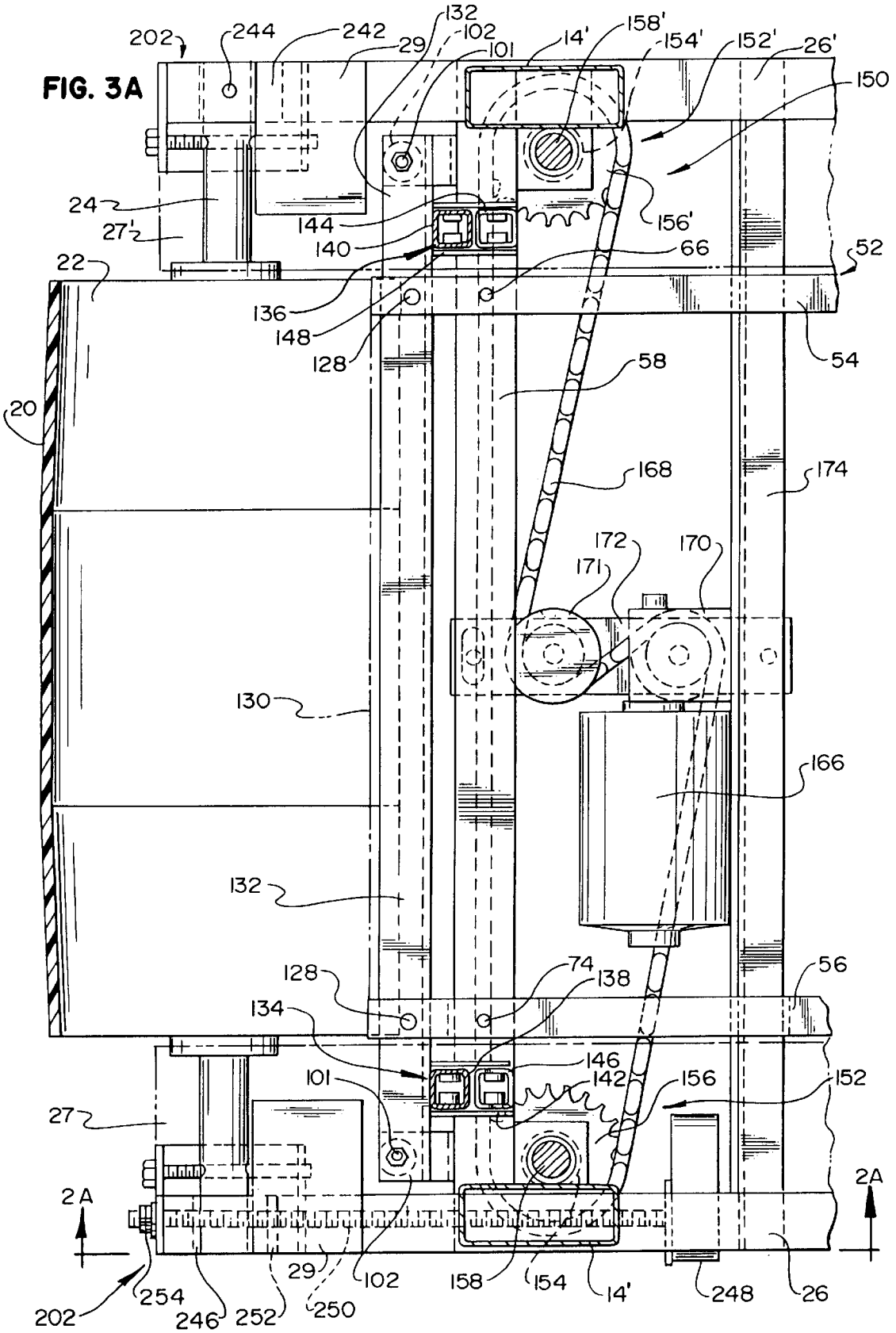
202
244
242
29
132
102
101
14'
158'
154'
152'
26'
150
24
27'
144
140
156'
66
52
22
136
148
128
54
58
20
168
174
172
170
171
130
166
132
128
74
138
56
134
146
101
142
156
152
27
2A
2A
29
102
158
154
14'
248
26
202
254
246
252
250

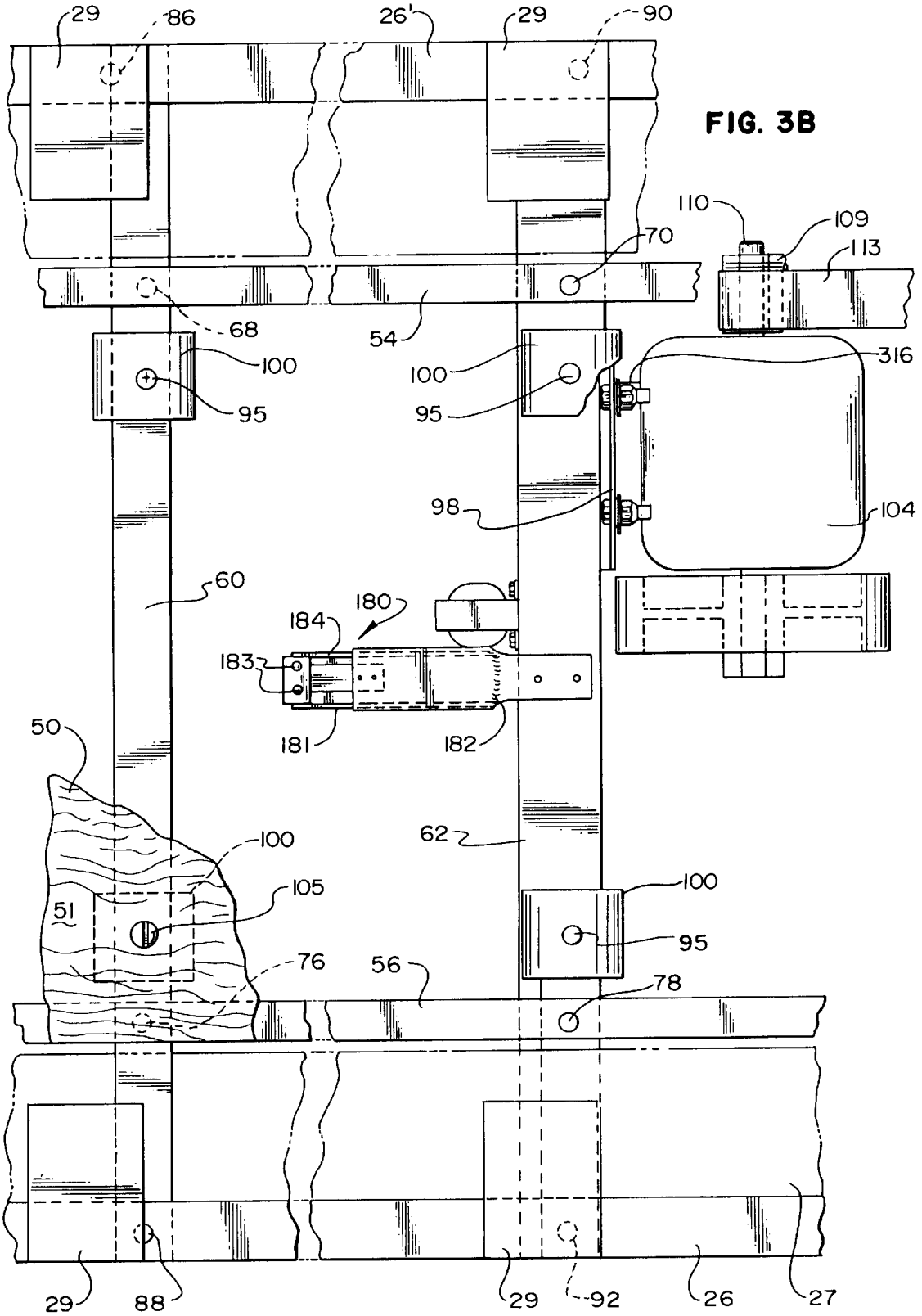
29
86
26'
29
90
110
109
113
70
68
54
100
100
316
95
95
98
104
60
180
184
183
181
182
50
100
62
105
51
100
95
76
56
78
29
88
29
92
26
27

FIG. 3B

FIG. 3C

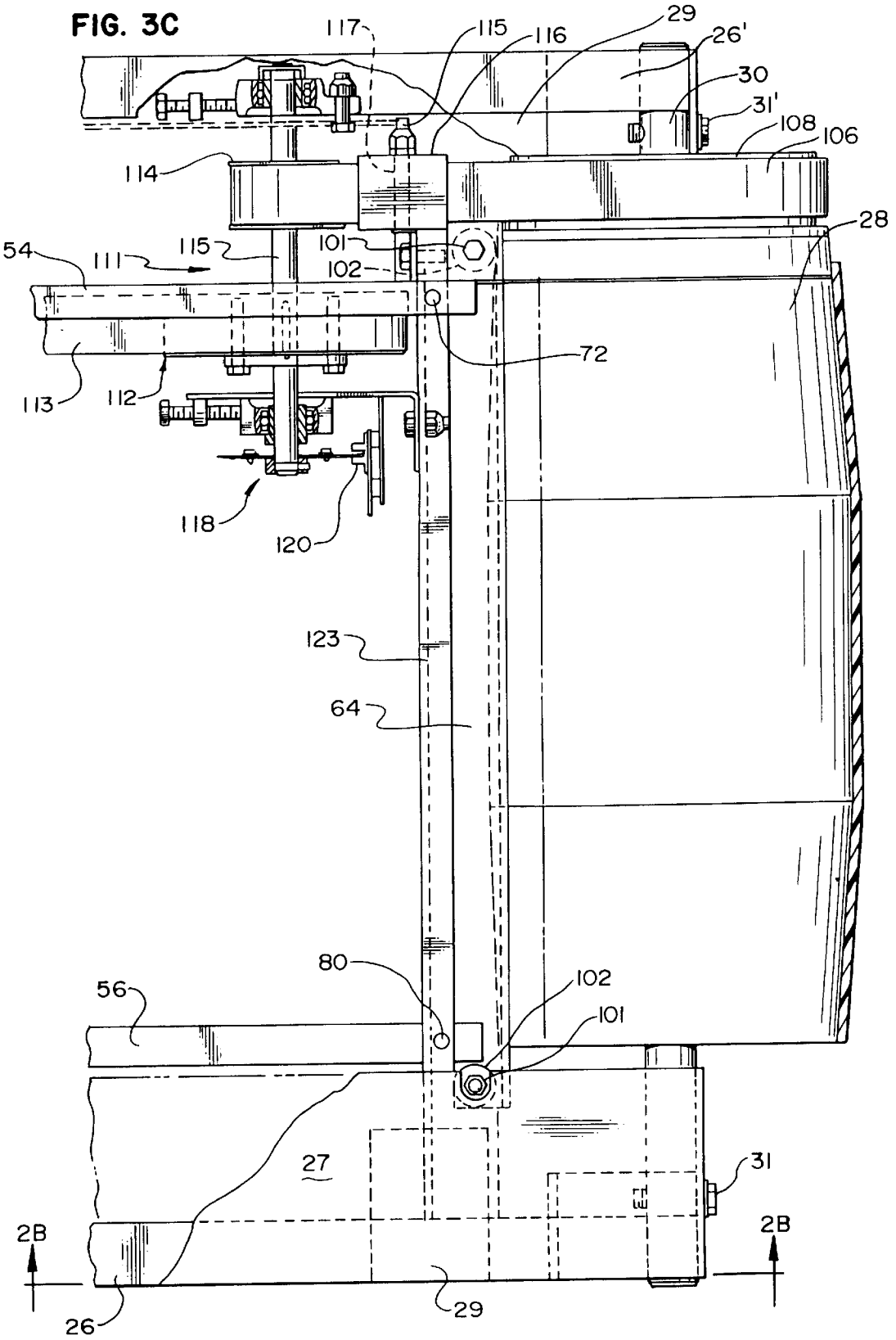
117
115
116
29
26'
30
31'
108
106
114
28
54
111
115
101
102
72
113
112
118
120
123
64
80
102
101
56
27
31
2B
2B
26
29

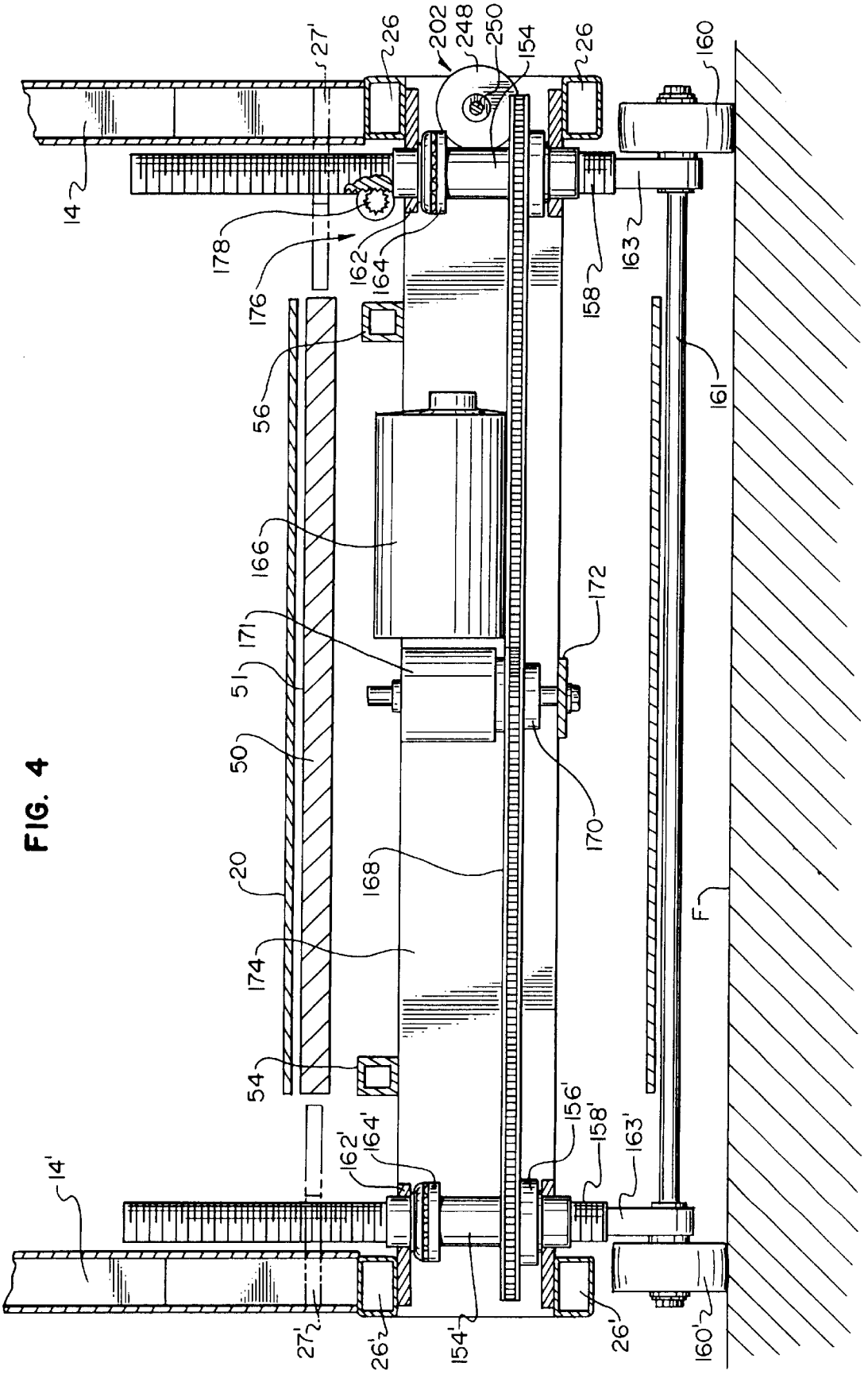
14
27'
26
202
248
250
154
26
160
178
176
162
164
158
163
56
161
166
172
171
51
50
170
20
168
F
174
54
156'
158'
163'
162'
164'
14'
27'
26'
154'
26'
160'

FIG. 4

FIG. 5

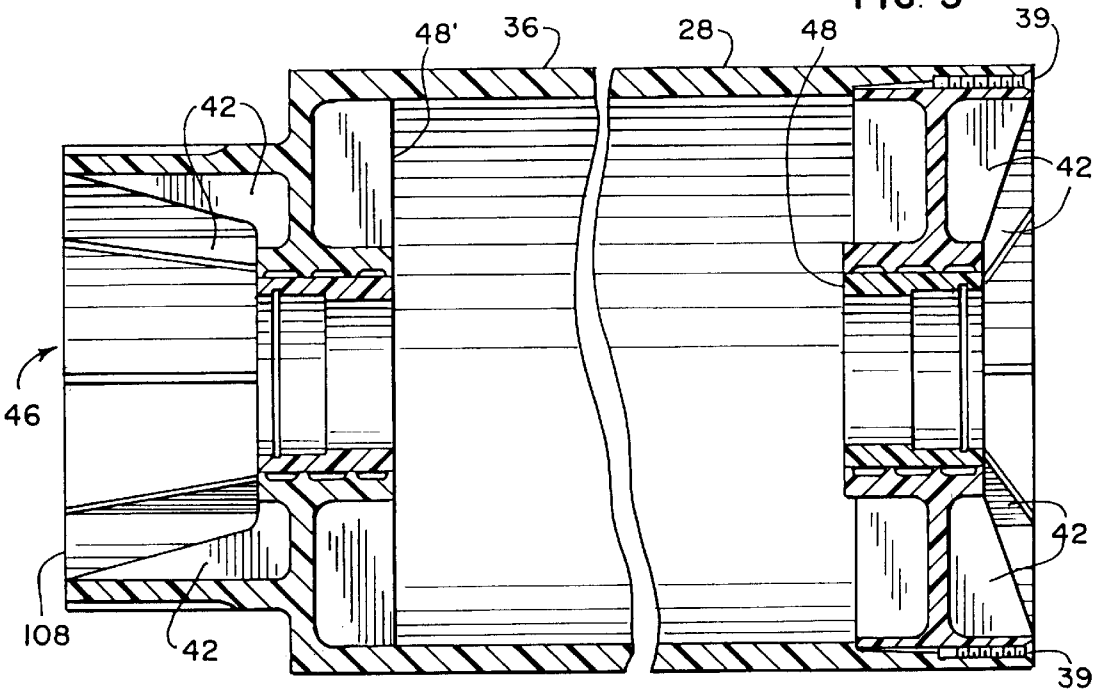
48'
36
28
48
39
42
42
46
42
108
42
39

FIG. 6

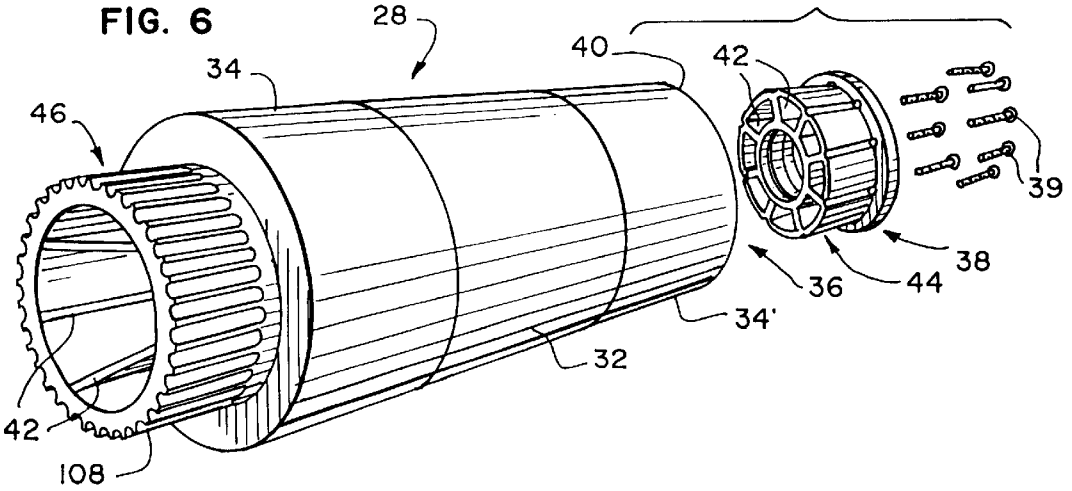
28
40
42
34
46
39
38
36
44
34'
32
42
108

FIG. 7

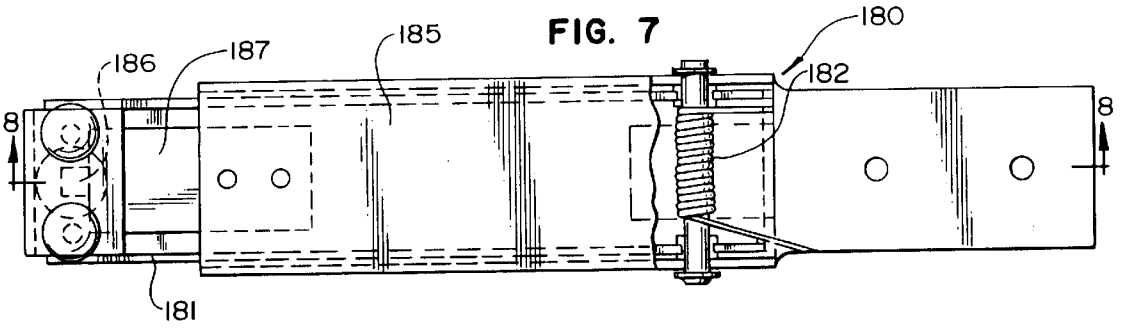

FIG. 8

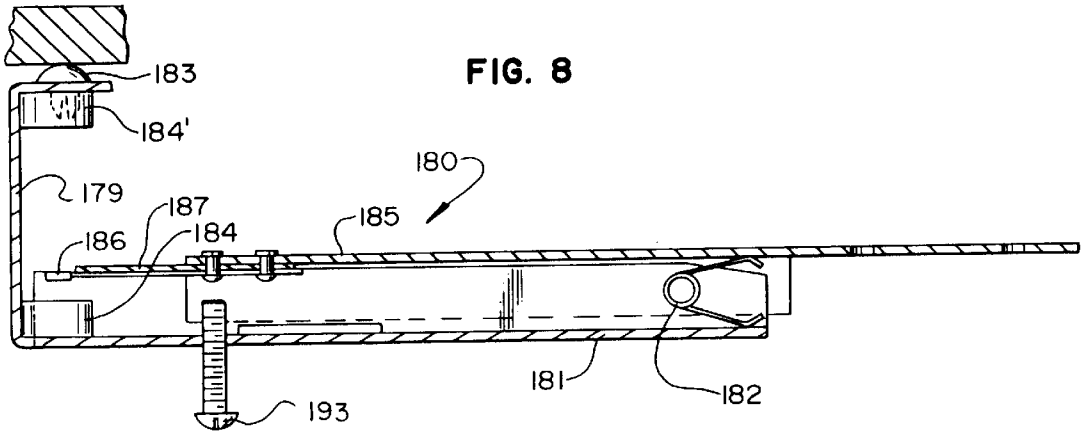

FIG. 9

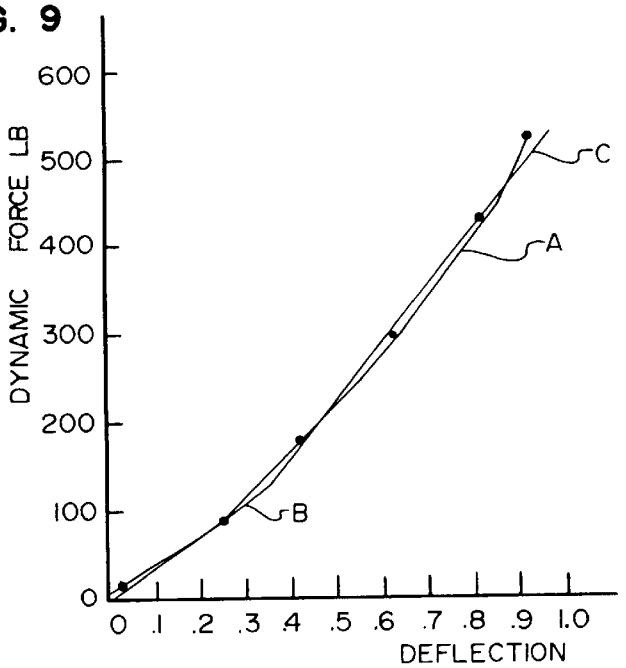

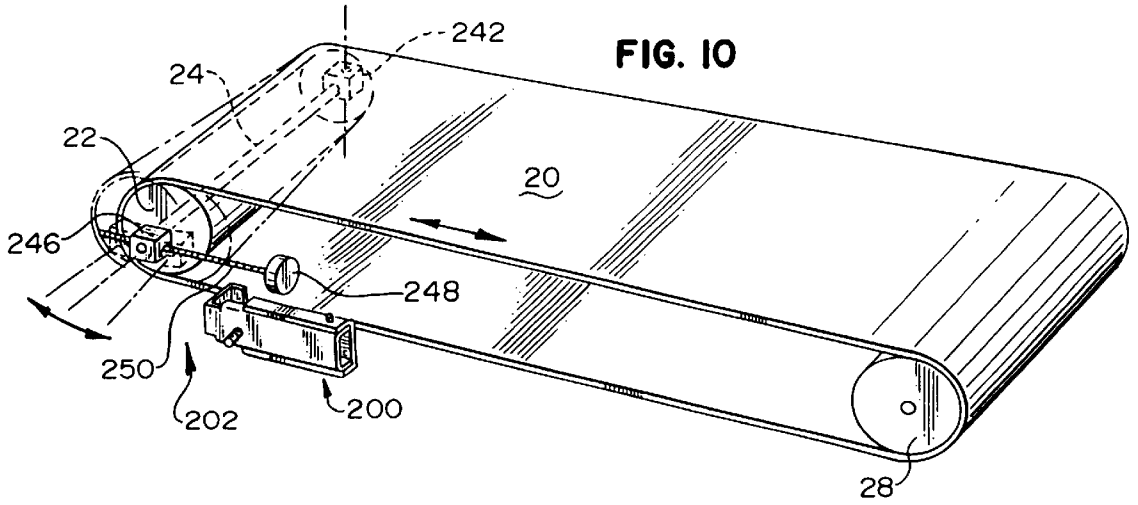

FIG. 10

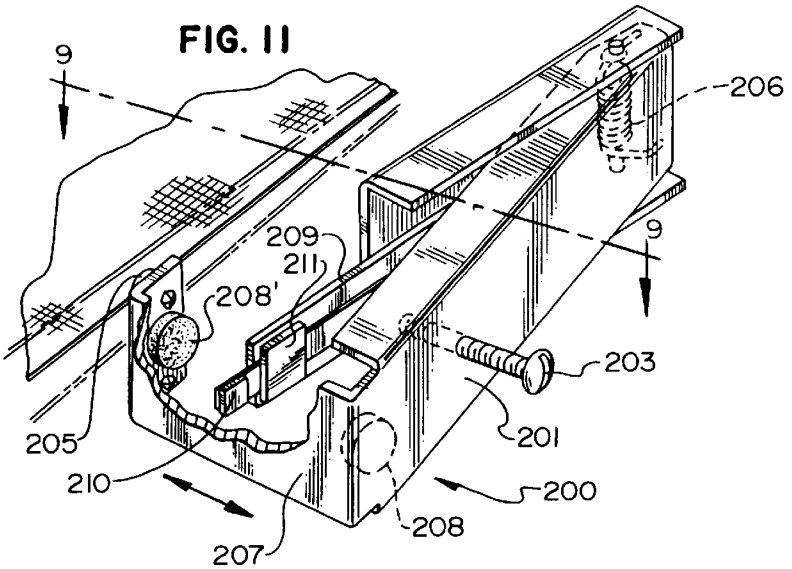

FIG. 11

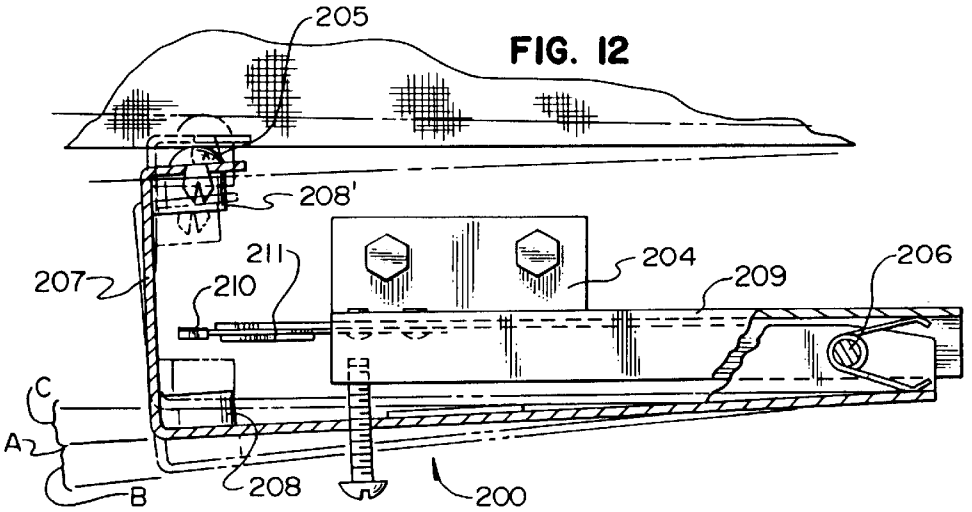

FIG. 12

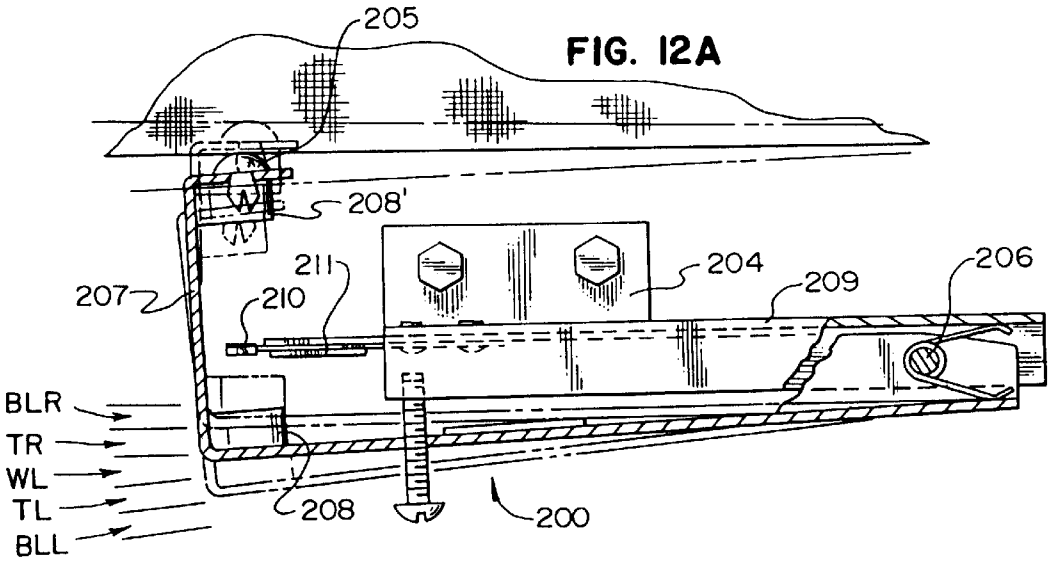

FIG. 12A

FIG. 12B

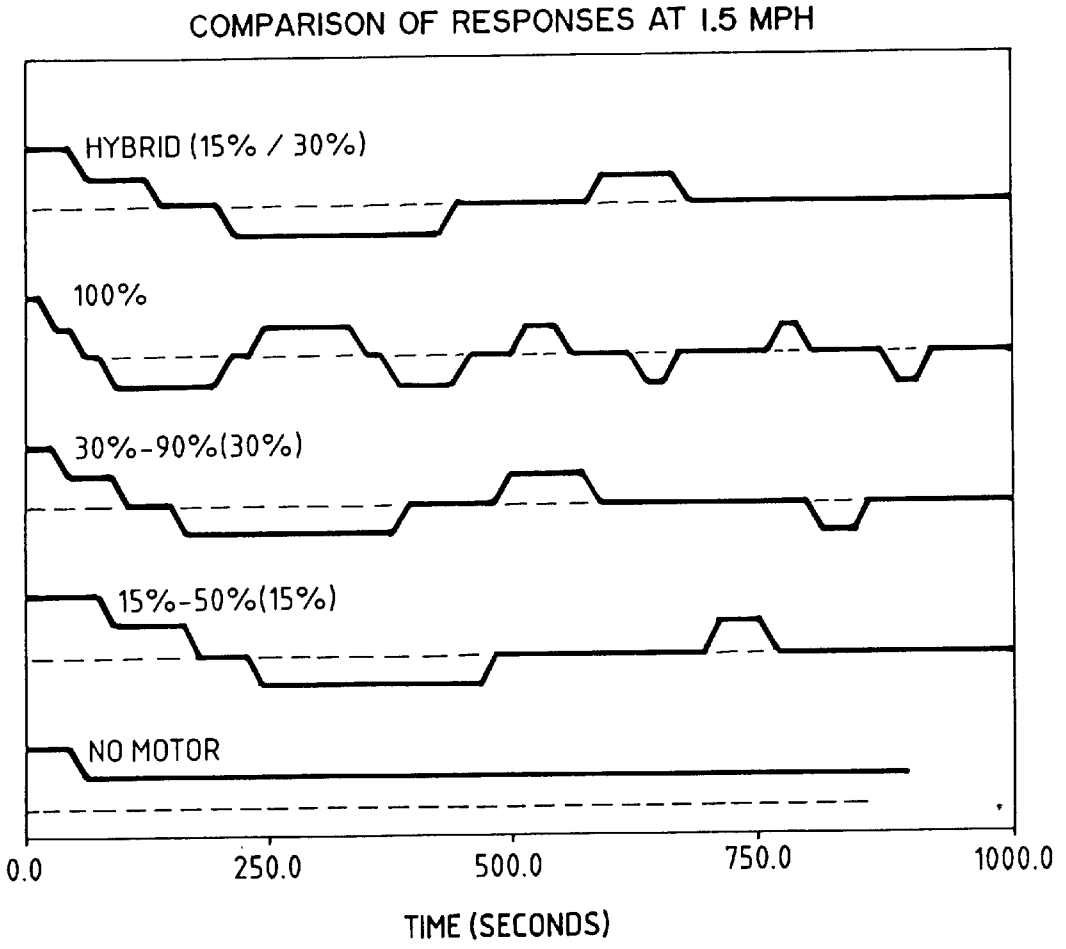
COMPARISON OF RESPONSES AT 1.5 MPH
HYBRID (15% / 30%)
100%
30%-90%(30%)
15%-50%(15%)
NO MOTOR
0.0
250.0
500.0
750.0
1000.0
TIME (SECONDS)

FIG. 12C

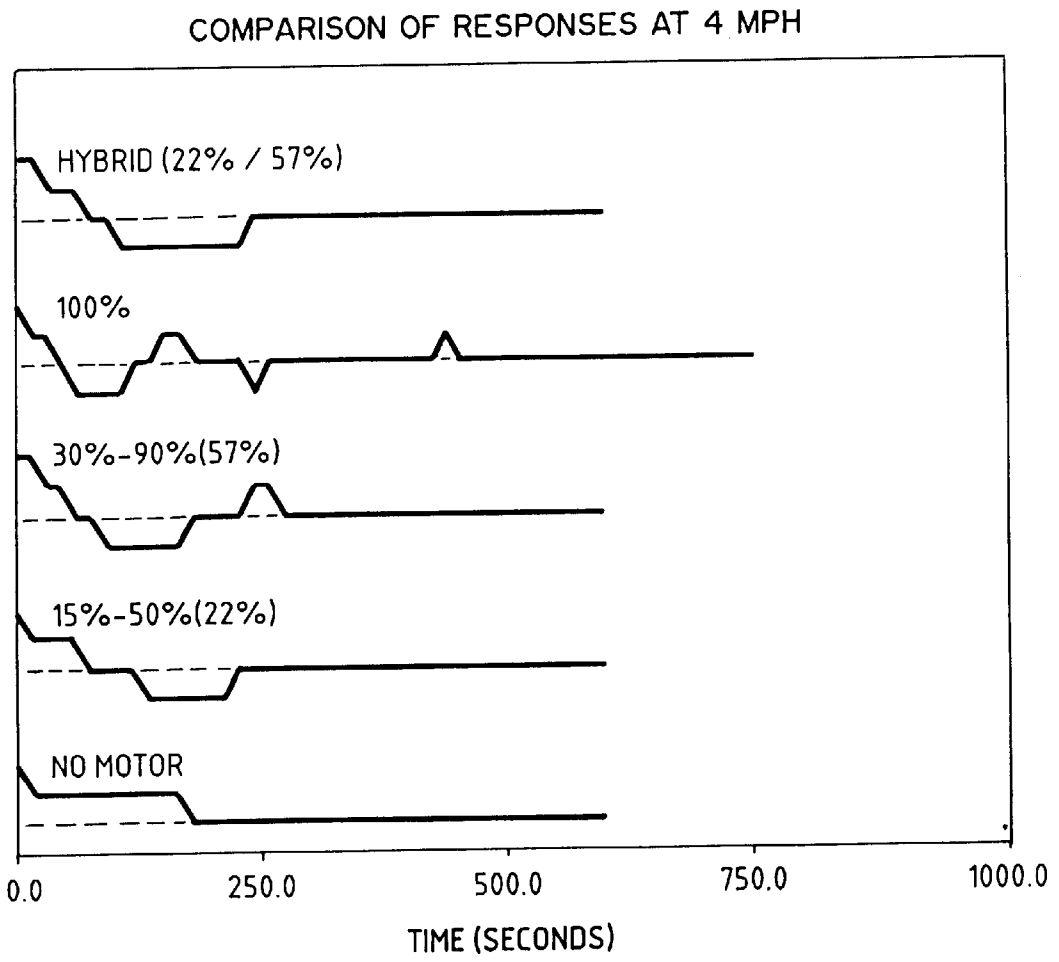
COMPARISON OF RESPONSES AT 4 MPH
HYBRID (22% / 57%)
100%
30%-90%(57%)
15%-50%(22%)
NO MOTOR
0.0
250.0
500.0
750.0
1000.0
TIME (SECONDS)

FIG. 12D

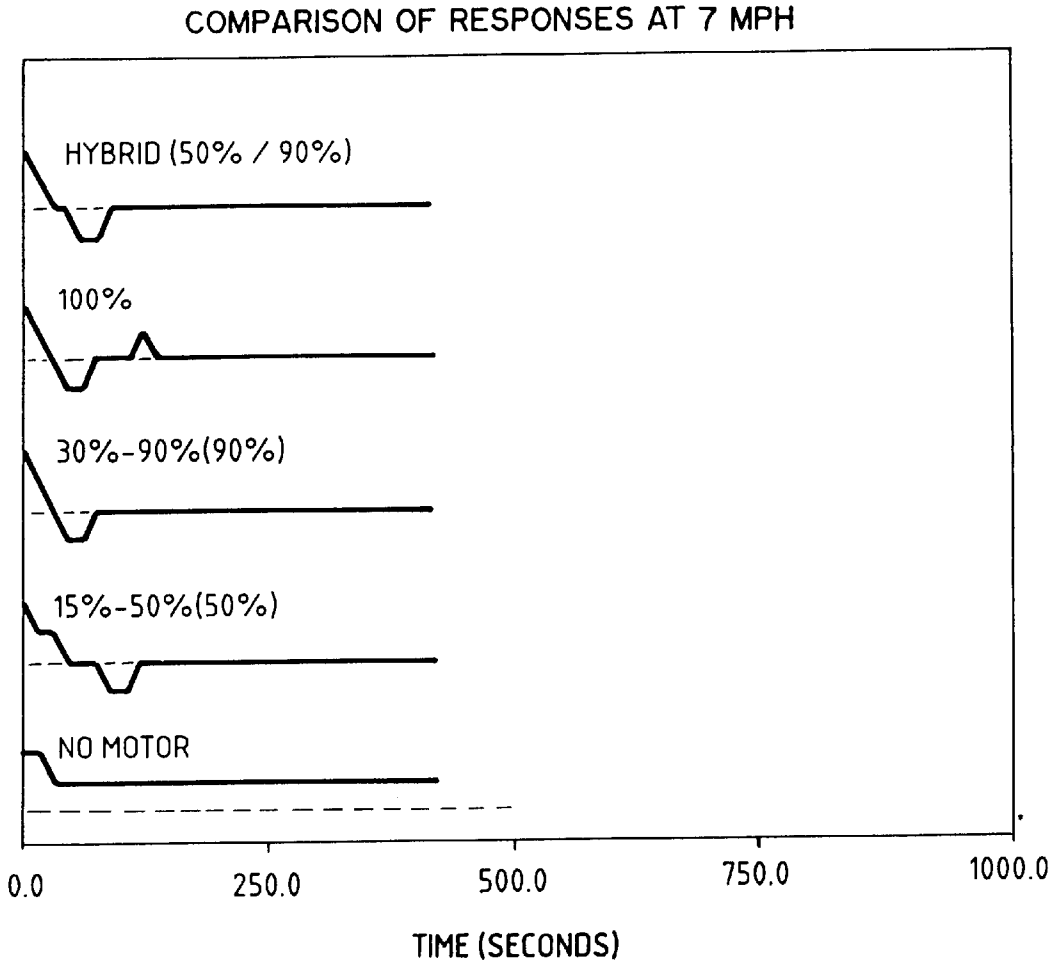
COMPARISON OF RESPONSES AT 7 MPH
HYBRID (50% / 90%)
100%
30%-90%(90%)
15%-50%(50%)
NO MOTOR
0.0
250.0
500.0
750.0
1000.0
TIME (SECONDS)

FIG. 13

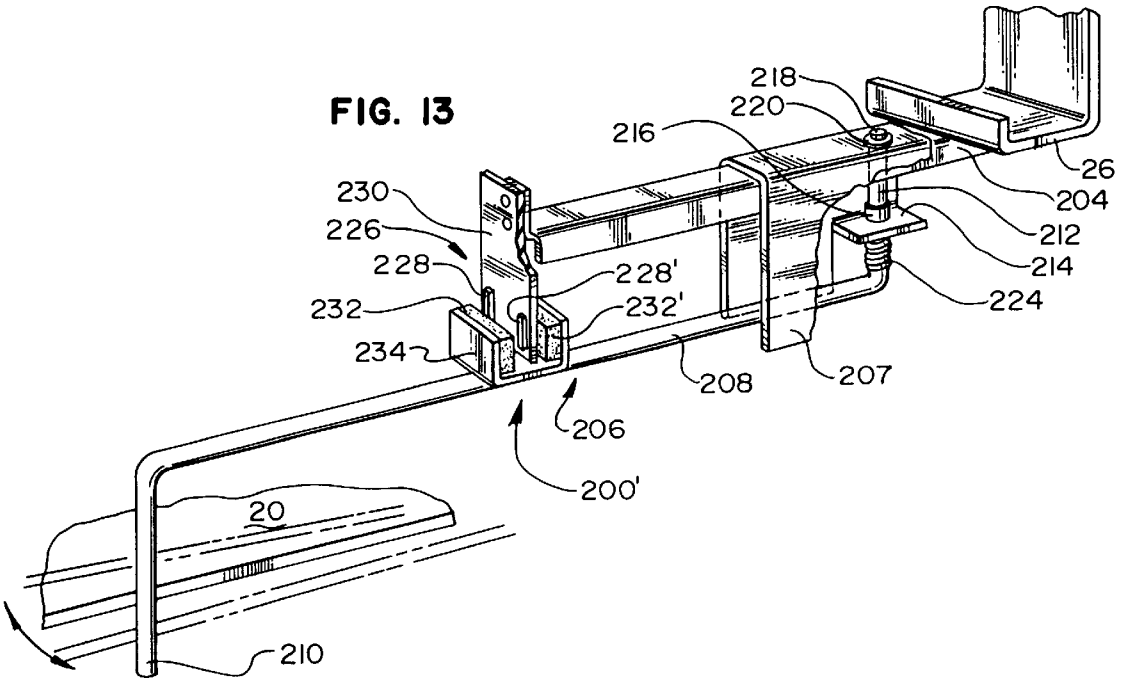

FIG. 14

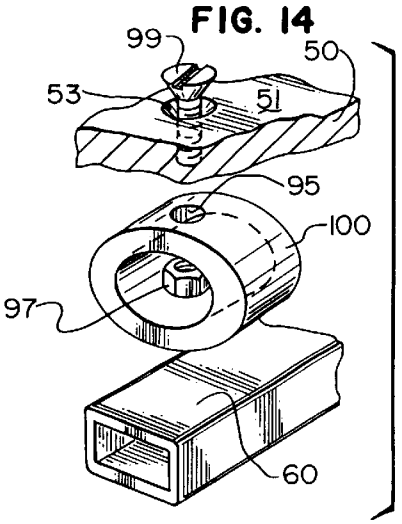

FIG. 15

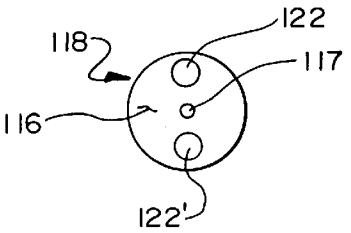

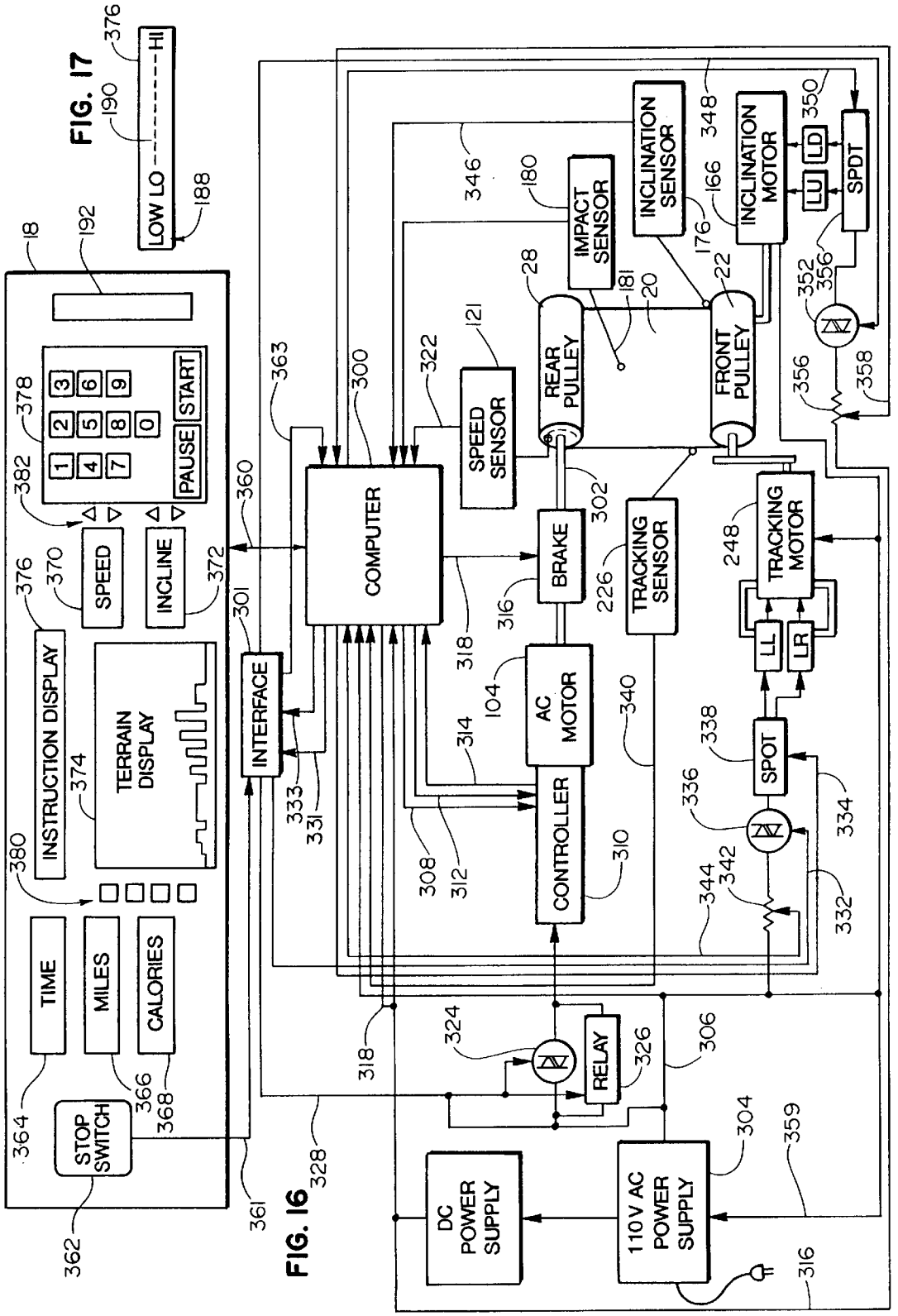
LOW LO
HI
INSTRUCTION DISPLAY
TERRAIN DISPLAY
SPEED
INCLINE
PAUSE
START
TIME
MILES
CALORIES
STOP SWITCH
INTERFACE
COMPUTER
SPEED SENSOR
REAR PULLEY
FRONT PULLEY
IMPACT SENSOR
INCLINATION SENSOR
INCLINATION MOTOR
SPDT
LU
LD
BRAKE
TRACKING SENSOR
TRACKING MOTOR
LL
LR
AC MOTOR
CONTROLLER
SPOT
RELAY
DC POWER SUPPLY
110V AC POWER SUPPLY

FIG. 17

FIG. 16

FIG. 18

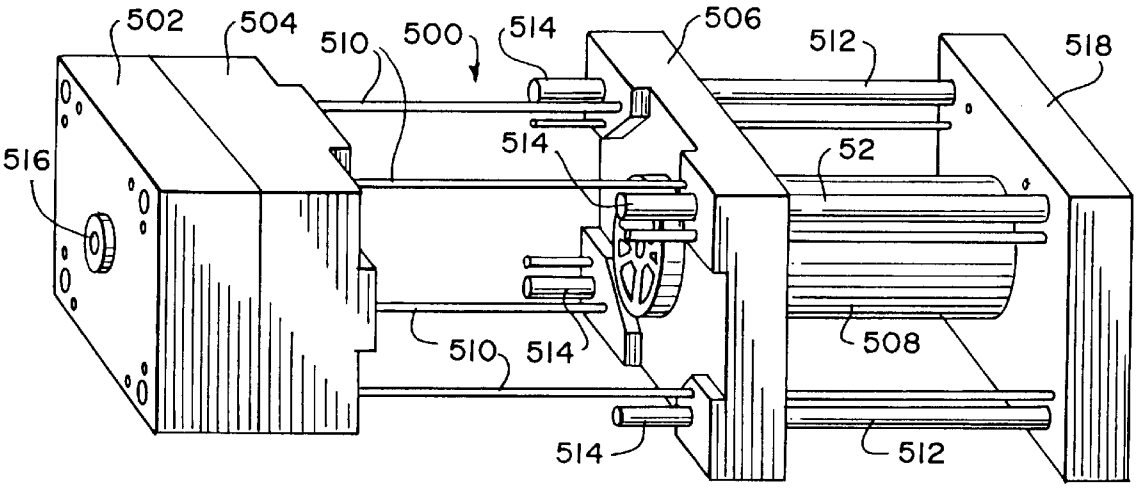

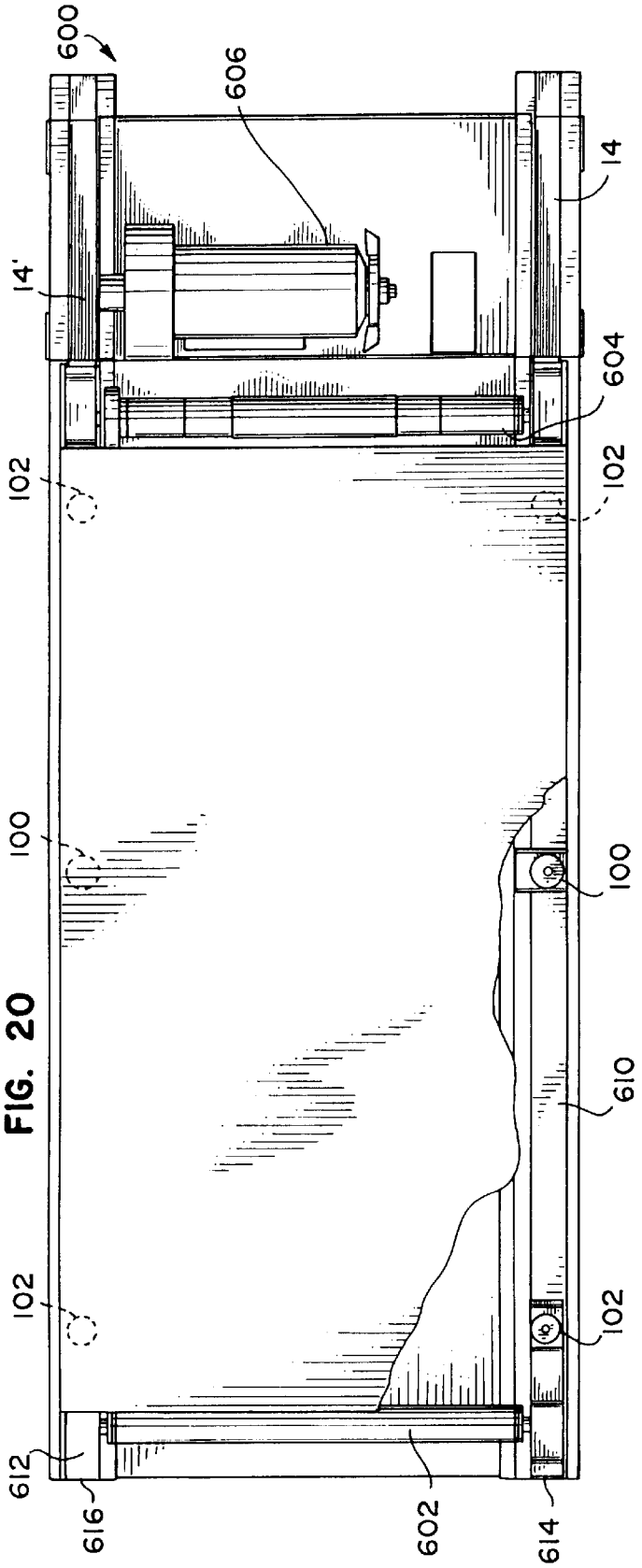
600
606
14'
14
604
102
102
100
100
610
102
102
612
616
602
614

FIG. 20

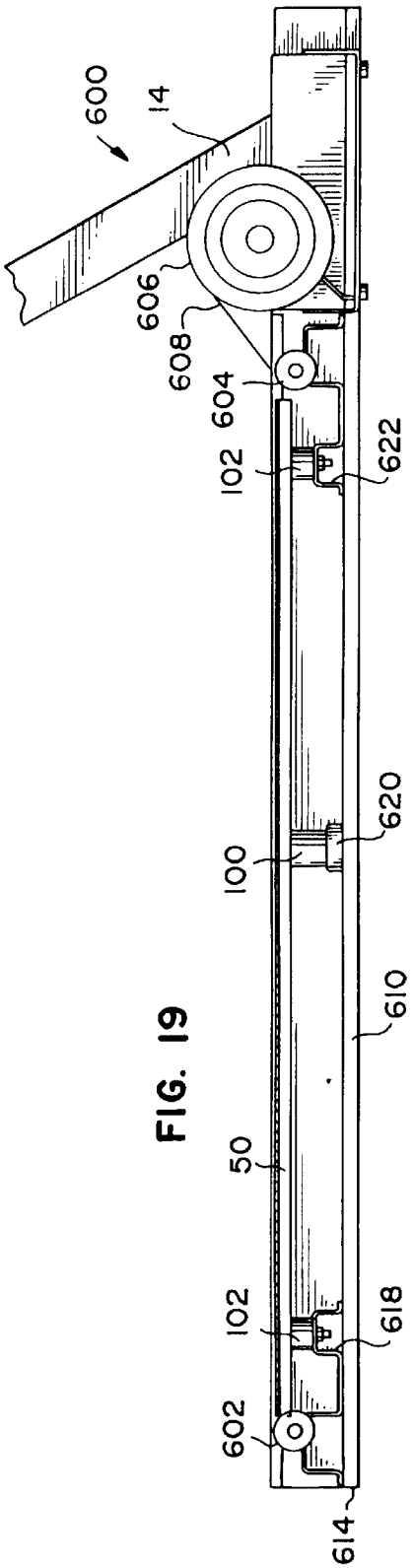
600
14
606
608
604
102
622
620
100
610
50
102
618
602
614

FIG. 19

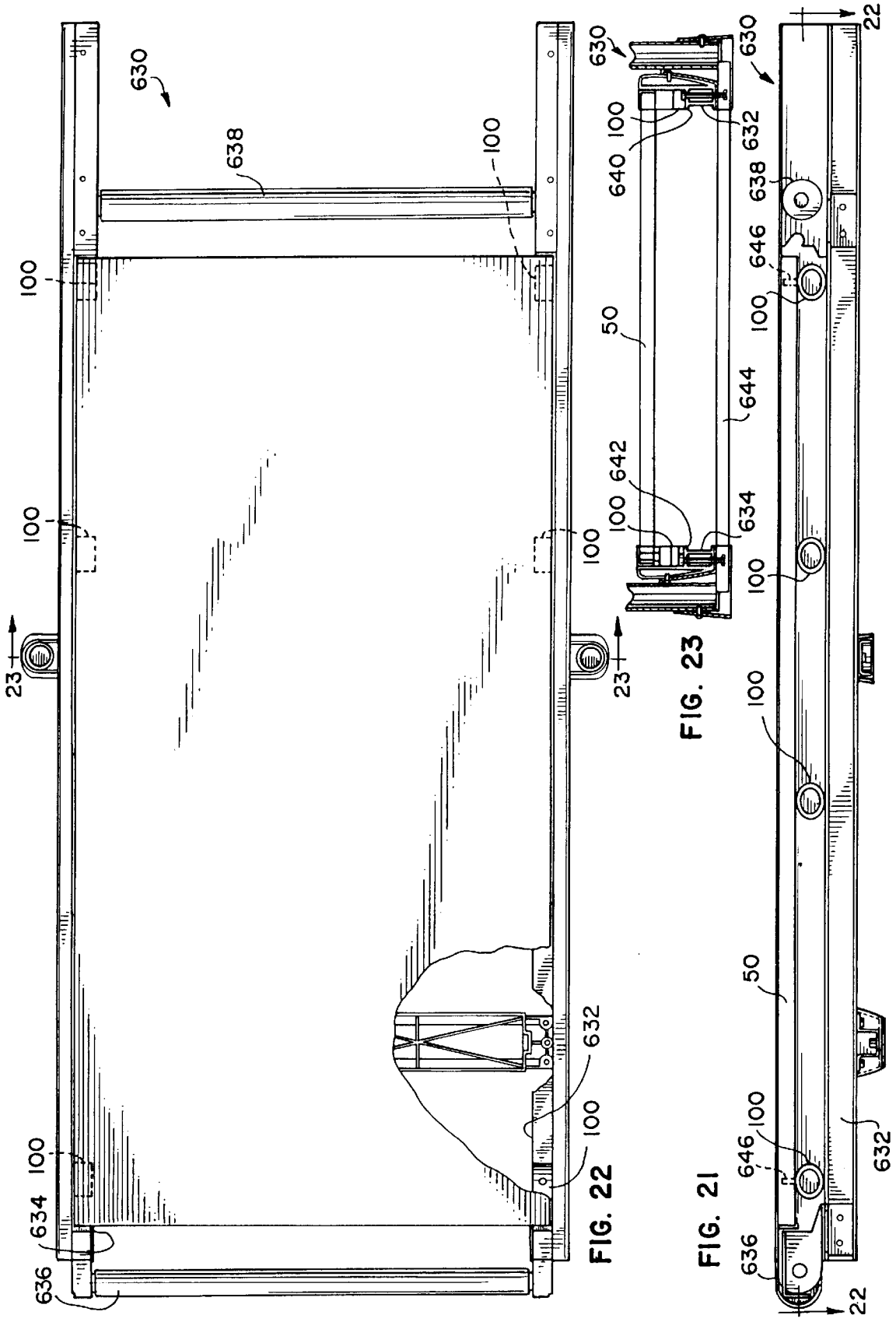

FIG. 22

FIG. 23

FIG. 21

EXERCISE TREADMILL

This application is a continuation of U.S. Ser. No. 09/073,400, filed May 7, 1998, now U.S. Pat. No. 6,095,951 which is a continuation of U.S. Ser. No. 08/574,366, filed Dec. 18, 1995, now U.S. Pat. No. 5,752,897, which is a division of application number 08/254,030, filed Jun. 3, 1994, now U.S. Pat. No. 5,484,362, which is a continuation-in-part of U.S. Ser. No. 07/686,906, filed Apr. 17, 1991, now U.S. Pat. No. 5,382,207, which is a continuation-in-part of U.S. Ser. No. 07/452,885, filed Dec. 19, 1989, now abandoned, which is a continuation-in-part of U.S. Ser. No. 07/368,450, filed Jun. 19, 1989, now abandoned.

FIELD OF THE INVENTION

The invention generally relates to exercise equipment and in particular to exercise treadmills.

BACKGROUND OF THE INVENTION

Exercise treadmills are widely used for various purposes. Exercise treadmills are, for example, used for performing walking or running aerobic-type exercise while the user remains in a relatively stationary position, further, exercise treadmills are used for diagnostic and therapeutic purposes. For all of these purposes, the person on the exercise treadmill normally performs an exercise routine at a relatively steady and continuous level of physical activity. Examples of such treadmills are illustrated in U.S. Pat. Nos. 4,635,928, 4,659,074, 4,664,371, 4,334,676, 4,635,927, 4,643,418, 4,749,181, 4,614,337 and 3,711,812.

Exercise treadmills typically have an endless running surface which is extended between and movable around two substantially parallel pulleys at each end of the treadmill. The running surface may be comprised of a belt of a rubber-like material or alternatively, the running surface may be comprised of a number of slats positioned substantially parallel to one another attached to one or more bands which are extended around the pulleys. In either case, the belt or band is relatively thin. The belt is normally driven by a motor rotating the front pulley. The speed of the motor is adjustable by the user so that the level of exercise can be adjusted to simulate running or walking as desired.

The belt is typically supported along at least its upper length between the pulleys by one of several well-known designs in order to support the weight of the user. For example. rollers may be positioned directly below the belt to support the weight of the user. Another approach is to provide a deck or support surface beneath the belt, such as a wood panel, in order to provide the required support. Here a low-friction sheet or laminate is usually provided on the deck surface to reduce the friction between the deck surface and the belt. Because the belt engages the deck surface, friction between the belt and the deck arises and the belt is therefore subject to wear. Further, most of the decks are rigid resulting in high impact loads as the user's feet contact the belt and the deck. This is often perceived by users as being uncomfortable and further can result in unnecessary damage to joints as compared to running on a softer surface.

Because the typical treadmill has a very stiff, hard running surface and can become uncomfortable for extended periods or running, some manufacturers have applied a resilient coating to the running surface, such as rubber or carpeting, to reduce foot impact. Unfortunately, these surfaces for the most part have not provided the desired level of comfort because the running surface tends to retain its inherent stiffness. Attempts to solve this problem by using a thicker

belt to provide a more shock absorbent running surface have not been successful for the reasons given in U.S. Pat. No. 4,614,337. Specifically, the thickness of the belt has to be limited in order to limit the belt drive power to reasonable levels. In other words, the thicker the belt, the more power that is required to drive the pulley. To keep motor size cost effective, it has been necessary to keep the belt relatively thin. As discussed below, the power of the motor required to drive a pulley is also related to the size of the pulleys.

Pulleys used in current exercise treadmills typically are made of steel or aluminum and as such are relatively expensive to make and are relatively heavy. Therefore, because of tooling, manufacturing and material costs, the diameter of the pulleys are normally no larger than three to four inches.

Additionally, the diameter of the pulley directly affects the power required to rotate the pulley as does the thickness of the belt. If the diameter of the pulleys is relatively small, the thickness of the belt must be kept relatively thin. As the diameter of the pulley is increased, the belt may be made thicker for the same amount of power available to drive the pulleys. As discussed above, the thicker the belt, the more shock the belt will absorb.

A further disadvantage of smaller pulleys results from the fact that the reduced surface area of the pulley contacting the belt requires increased tension in the belt in order to transfer torque from the treadmill motor to the belt. In some cases, this increased tension can result in decreased belt life.

The pulleys used in current exercise treadmills are typically of a "convex" or of a "cambered" design and as such have a substantially inwardly sloping profile with a portion of the pulley having a larger diameter, or crown, at the center. The convex-type pulley has a rounded crown at its center portion and the cambered-type pulley has a cylindrical center section between conical ends. The purpose of using these two types of pulleys is to maintain "tracking" of the felt because the belt is less likely to slide from side to side on the pulley during rotation if the pulley has a crown. Unfortunately, belts on convex- or camber-type pulleys also tend to be sensitive to improper adjustment and side loading, which can occur when the user is not running on the center of the belt.

Another source of belt wear on existing exercise treadmills results from driving the front belt pulley instead of the rear belt pulley. In a front drive arrangement, the belt has a tendency to develop a slack portion on the upper or running surface of the belt. This tends to increase belt wear. Because existing treadmills have relatively small diameter belt pulleys, it has not been practical to locate the drive motor such that the rear belt pulley can be driven by the motor.

Because most pulleys use the convex- or camber-type configuration as a belt guide, the belts are still sensitive to improper adjustment and side loading. A system whereby a more positive, lateral "tracking" or guidance of the belt is achieved during rotation is therefore desirable.

Many current exercise treadmills also have the ability to provide a variable incline to the treadmill. Normally, the entire apparatus is inclined, not just the running surface. There are a number of exercise treadmills having manual or power driven inclination systems to take advantage of the fact that the exercise effort, or aerobic effect, can be varied greatly with small changes in inclination. For example, a seven percent grade doubles the aerobic or cardiovascular effort compared to level walking or running exercise.

Current inclination or lift mechanisms typically comprise a toothed post in a rack-and-pinion arrangement or a

threaded post on which a sprocket attached to the treadmill frame rotated upwards to lift the treadmill. In both arrangements, the post must be at a height equivalent to the height of travel of the treadmill frame to accommodate the travel of the pinion or sprocket. The length of the post tends to compromise the aesthetics of the treadmill because the post has to extend beyond the plane of the running surface to provide the desired inclination of the running surface. Therefore, a lift mechanism with a large extension rotation which would fit primarily within the treadmill enclosure is desirable.

The treadmill user's stride also effects the user's body because the resultant force on the user's body increases as the stride increases. If the user is running relatively hard, especially over an extended period of time, physical damage to the user's feet and legs can occur. The larger the resultant force the greater the likelihood of physical damage. If a user's stride results in a force (measured in pounds) which is about equal to or greater than twice the user's body weight, the force can be considered excessive. Therefore, a sensor which could measure the force or impact on the treadmill by a user is desirable.

SUMMARY OF THE INVENTION

It is therefore an object of the invention to provide an exercise treadmill having a shock absorbent running surface by providing resilient members to support a deck located under a belt.

It is also an object of the invention to provide molded plastic belt pulleys having a large diameter including a drive gear portion integrally molded into one of the pulleys.

It is a further object of the invention to provide an exercise treadmill in which the belt is driven by the rear belt pulley.

It is a further object of the invention to provide a more positive lateral "tracking" or guidance mechanism for the belt.

It is another object to provide a lift mechanism to incline the treadmill running surface that fits primarily within a treadmill enclosure and intermediate the front and rear pulleys.

It is yet another object of the invention to provide a treadmill capable of sensing the impact of the user's body on the treadmill and capable of providing that information to the user.

It is still another object of the invention to provide a treadmill in which treadmill belt tension can be reduced without sacrificing reliable operation.

In particular, an exercise treadmill is provided in which a belt is supported for a portion of its length between a pair of pulleys and a deck supported by resilient members in combination with a resilient belt. The thickness of the belt is preferably approximately 0.20 inches. Further, the deck is fixed to resilient members at several points, permitting the deck to partially float on the deck frame when stepped upon, resulting in even lower impact loads on. the user feet and legs.

The belt pulley construction can be, alternatively, straight cylindrical, convex, or a cylindrical center section and conical ends (cambered). The belt pulleys also have a relatively large diameter, preferably approximately nine inches. The pulleys are of a molded plastic construction and a drive sprocket portion can be molded as part of the pulley. Possible plastic materials from which the pulleys can be molded include glass-filled polypropylene, polystyrene, polycarbonate, polyurethane and polyester. In some embodiments, bearing seat assemblies can be molded-in to the pulley when it is originally manufactured, thereby eliminating the need for inserting and fastening bearing seats into molded pulleys.

The use of large diameter pulleys is facilitated through the use of a plastic construction, rather than a steel construction. The large diameter of the pulleys permits the use of thicker belts which can be made to be more shock-absorbing than currently used belts. User comfort is therefore further enhanced. The larger pulleys also reduce the belt tension required for satisfactory belt drive.

A belt position sensor mechanism provides for positive lateral tracking of the belt. As a result, the belt is prevented from laterally sliding too far to one side of the pulley so that it contacts a frame or other portions of the structure, resulting in a reduction of wear or damage to the belt. This arrangement is also less sensitive to improper adjustment and side loading.

The sensor mechanism includes an arm which is spring biased to one edge of the lower surface of the belt, preferably near the front belt pulley. As the belt moves to one side or the other on the front pulley, the arm moves in the same direction as the lateral movement of the belt. In one of two designs, a Hall effect sensor connected to the arm electrically measures the lateral movement of the belt, and the electrical signals are transmitted to a microprocessor. If correction of the belt position is required, the microprocessor will activate a front pulley pivoting mechanism to pivot one end of the front pulley in a longitudinal direction, either towards the front or towards the rear of the treadmill. Because the belt will tend to move towards the lateral (transverse) direction in which the belt tension is lower, the front pulley will be pivoted towards the front of the treadmill to move the belt to the right, and towards the rear of the treadmill to move the belt to the left The front pulley pivoting mechanism uses a pivot block for holding one end of the pulley axle and a guide block for the other end of the front axle that selectively moves along a longitudinal path from front to rear to create the pivot. In some embodiments, the pivot mechanism drive motor duty cycle is varied as a function of belt position and speed to optimize belt position corrections.

Also, a lift mechanism for the exercise treadmill is provided which includes an internally threaded sprocket assembly which, when driven, forces a non-rotating screw, threaded to the sprocket assembly against the floor thereby inclining the unit. A lift mechanism with a large extension ration which can fit primarily within a side enclosure of the treadmill is therefore made possible. In another embodiment, molded sprockets are driven on the screw by a toothed belt, thereby eliminating the need for chain oiling and providing quieter operation than that produced by a chain drive system.

An impact sensor mechanism is also provided to measure the relative force created on the deck by the treadmill user. The impact sensor mechanism includes an arm, having a pair of magnets, which is spring biased against the lower surface of the deck. As the deck flexes downward when the user's feet impact the deck, the impact sensor arm is also deflected downward. A Hall effect sensor secured to the frame between the magnets electrically measures the downward deflection of the deck, and the electrical signals are transmitted to a microprocessor. The downward deflection of the deck is a function of the foot impact force and is related to the compressibility of the resilient support members supporting the deck. The microprocessor calculates the impact

force by comparing the measured deflection to empirical values. Also, a relative force value is calculated, based on an inputted value for the user's body weight.

A mold for producing a large diameter pulley having an integral sprocket is also disclosed. In some embodiments, the mold accepts a bearing insert or seat assembly prior to insertion of the plastic pulley material to yield a pulley with a molded-in bearing seat assembly. A method for producing these pulleys is also disclosed.

BRIEF DESCRIPTION OF THE DRAWINGS

FIG. **1** is a perspective view of an assembled exercise treadmill;

FIGS. **2**A and **2**B provide sectioned side views along the lines **2**A—**2**A and **2**B—**2**B, respectively of FIGS. **1**, **3**A and **3**C illustrating the internal assembly of the exercise treadmill;

FIG. **2**C illustrates an alternative structure for securing the deck to the frame to be used in place of the linkage assembly shown in FIG. **2**A;

FIGS. **3**A, **3**B and **3**C provide sectioned top views of FIG. **1** from front to back, illustrating the internal lift assembly of the exercise treadmill and the spacing of spring post assemblies;

FIG. **3**D illustrates an alternative embodiment of the internal lift assembly which uses a toothed drive belt;

FIG. **4** is a sectioned front view of the exercise treadmill of FIG. **1**, illustrating the internal lift assembly of FIG. **3**A;

FIG. **5** is a partial sectioned longitudinal view illustrating an assembled cambered-type rear belt pulley;

FIG. **6** is an exploded, perspective view of the rear belt pulley of FIG. **5**;

FIG. **7** is a top view of an impact sensor for use with the treadmill of FIG. **1**;

FIG. **8** is a side view of the impact sensor of FIG. **7**;

FIG. **9** is a graph of dynamic force versus downward deflection of the deck;

FIG. **10** is a perspective view illustrating the placement of a belt sensing mechanism and a front pulley pivoting mechanism;

FIG. **11** is a perspective view of the belt sensing mechanism of FIG. **10**;

FIG. **12** is a top view of the pivoting movement of the sensor arm of the belt sensing mechanism in FIG. **11**;

FIG. **12**A is a top view of the pivoting of the sensor arm of FIG. **12** showing the preferred sensing regions.

FIGS. **12**B–**12**D are graphs of belt tracking performance at 1.5, 4 and 7 miles per hour using different belt tracking motor control regimes,

FIG. **13** is a perspective view of an alternative embodiment for the belt sensing mechanism;

FIG. **14** is a exploded, perspective view of one of the resilient member assemblies shown in FIGS. **2**A and **2**B;

FIG. **15** is a right side view of the idler pulley, illustrating the speed sensor magnets,

FIG. **16** is a functional block diagram illustrating the integrated control scheme,

FIG. **17** is a diagram illustrating the impact force display;

FIG. **18** is a perspective view of a mold useful for forming large diameter treadmill pulleys having integral toothed sprockets.

FIG. **19** is a sectioned side view of a second embodiment of a treadmill,

FIG. **20** is a sectioned top view of the treadmill of FIG. **19**;

FIG. **21** is a sectioned side view of a third embodiment of a treadmill;

FIG. **22** is a sectioned top view of the treadmill of FIG. **21** taken along lines **22**A—**22**A of FIG. **21**; and

FIG. **23** is a sectioned front view of the treadmill of FIGS. **21** and **22** taken along lines **23**A—**23**A of FIG. **22**.

DETAILED DESCRIPTION OF THE INVENTION

FIG. **1** provides a perspective view of an assembled exercise treadmill **10**. The treadmill **10** has a lower frame portions **12** and **12'** housing the internal mechanical components of the treadmill **10**, as discussed below. Projecting upwardly from frame **12** and **12'** are a pair of railing posts **14** and **14'**. As illustrated in FIG. **1**, railing posts **14** and **14'** are slightly tilted from perpendicular relative to lower frame **12** and **12'**, primarily for aesthetic purposes. Secured to the tops of railing posts **14** and **14'** are a pair of side rails **16** and **16'**. respectively. Side rails **16** and **16'** provide the treadmill user with a means of support either during the entire exercise period or for an initial period until the user has assimilated himself to the speed of the treadmill. Extending between and attached to the side rails **16** and **16'** is a front rail **17** and a control panel **18** mounted on crossmember **19**. Front rail **17** provides vet another means of support for the treadmill user. Control panel **18** includes electronic controls and information displays which are typically provided on exercise treadmills for purposes such as adjusting the speed of treadmill **10** and for operating a lift mechanism for inclining the entire exercise treadmill **10**, as will be discussed later in connection with FIG. **16**.

In normal operation, the user will step onto a belt **20**, positioning himself between the side rails **16** and **16'**. As belt **20** begins to move, the user will start a walking motion towards the front of the treadmill **10**. Alternatively, the treadmill **10** may be set up to automatically begin to move at a speed according to a value entered from control panel **18**. The pace of the walking motion may be increased into a brisk walk or run, depending upon the speed of the belt **20**. The speed of belt **20** can be controlled by the adjustment of the controls on panel **18**, along with the adjustment of the inclination of the treadmill **10**, as will be discussed in connection with FIG. **16**.

A drive assembly for the belt **20** is generally illustrated in the Figures, and more particularly in FIGS. **2**B, **3**B and **3**C. A front belt pulley **22** is rotatably mounted on a first axle **24**. A second, rear belt pulley **28** is rotatably supported on a second axle **30** which is in turn secured to the frame portions **26** and **26'** within the frame portions **12** and **12'** by fasteners **31** and **31'**, respectively. Step surfaces **27** and **27'** run longitudinally from front to rear of treadmill **10**. Surfaces **27** and **27'** provide a surface upon which a treadmill user can step onto before, during or after the belt **20** begins to move. Step surfaces **27** and **27'** are supported on either frame **26** or **26'** by a plurality of support members **29**. The rear belt pulley **28** is positioned substantially parallel to the front pulley **22**. The belt **20** is looped around pulleys **22** and **28** for movement therearound, to form an upper run or length and a lower run or length of the belt.

The front pulley **22** and rear belt pulley **28** can be of any type of construction, for example, of either a straight cylindrical-type construction, a convex-type construction, or a cylindrical center section and conical ends-type construction (cambered pulley). Convex-type pulleys are especially useful since belts have the natural tendency to stay centered

on such a "crowned" pulley. Because convex-type pulleys involve relatively high production costs, cambered-type pulleys can be used instead, with the transitions from the conical sections to the cylindrical section being rounded off in order to approximate a convex shape.

The need for a specific type of pulley, such as a crowned pulley, can be mitigated by the use of a positive lateral belt tracking and positioning mechanism as discussed below. For example, although straight cylindrical pulleys have the poorest belt guidance characteristics of the three types of pulleys already discussed, straight cylindrical-type pulleys can be used in combination with a positive lateral belt tracking mechanism which can correct the lateral position of the belt. The use of a positive lateral tracking arrangement prevents the belt **20** from travelling too far to one side of either pulley **22** or **28** so that belt **20** does not contact either frame portion **26** or **26'**. Also, as discussed above, induced stresses and sensitivity to improper adjustment are decreased through the use of this arrangement.

Preferably, the pulleys **22** and **28** are of the same relatively large diameter and in the range of seven to ten inches. The preferred pulleys have a twenty inch longitudinal surface and include a six inch long crowned center portion having a diameter of 9.14 inches which includes a rise of 0.07 inches from the ends of the pulley that have a diameter of 9.00 inches. The relatively large diameter of pulleys **22** and **28** provides significant performance advantages. One advantage is that the large diameter pulleys permit the use of a relatively thicker belt **20**, which can provide more shock absorbency than most currently used belts The thickness of the preferred belt **20** is about 0.20 inches or more.

A second significant performance advantage of large diameter pulleys stems from the large drive pulley to belt contact area. This large contact area provides enhanced "gripping" of the belt by the pulley, which in turn permits the use of lower belt tension than is required by treadmills having smaller diameter pulleys. This, in turn, reduces or eliminates tension-related belt failure known to occur in treadmills having smaller diameter pulleys. For the preferred nine inch diameter pulley embodiment having a drive pulley to belt contact area of 250 square inches, belt tensions of 50 lbs. per inch of lateral belt width or less are sufficient to provide reliable belt operation with a Siegling belt, Model No. E 812 U0/U4.

Another advantage to larger diameter pulleys is increased belt life. It has been determined that stresses induced in the belt due to bending are decreased with larger diameter pulleys.

Pulleys **22** and **28** are also preferably of a molded plastic construction. Suitable materials from which pulleys **22** and **28** can be molded include glass-filled polypropylene, polystyrene, polycarbonate, polyurethane and polyester. Economical manufacture of the pulleys **22** and **28** having such a relatively large diameter is facilitated through the use of this plastic material. The preferred method of manufacturing pulley **28** is discussed later in conjunction with FIG. **18**.

A two-piece embodiment of the rear pulley **28** is illustrated in FIGS. **5** and **6**. Specifically, rear pulley **28** includes a cylindrical body **36** and a second portion or end cap **38** Body **36** includes an integrally molded toothed sprocket **108** at one end. Depending on the desired pulley construction, body **36** is either straight cylindrical, convex or have a cylindrical center section with conical ends. Preferably, as illustrated, body **36** has a cylindrical center section **32** with conical ends **34** and **34'**, generally known as a cambered-type pulley. A number of angularly spaced support elements indicated by reference numeral **42** are integrally molded within the end cap **38** and sprocket **108** to provide structural rigidity. A portion **44** of the molded cap **38** extends into the end **40** of cambered body **36**. The molded cap **38** is secured to the cambered body **36** by any one of a variety of known securing means including the press fit arrangement shown in FIGS. **5** and **6**. In addition to the press fit arrangement, eight flat head screws **39** can be used to secure cambered body **36** and cap **38** together. Molded cap **38** and the other, integral end **46** of the cambered body **36** each include a bearing seat assembly **48** and **48'** (FIG. **5**), respectively, for attachment to the second axle **30**. The use of molded-in bearing seats allows easy insertion of bearing rings (not shown) after the pulley has been molded. Bearing seats **48** and **48'** are preferably molded into pulleys **22** and **28** when pulleys **22** and **28** are originally manufactured. Front pulley **22** can be molded by a similar process, but, of course, does not include an integral sprocket.

As a user steps on the belt **20** during normal operation of the treadmill **10**, the belt **20** will tend to flex or bend under the weight of the user. The belt **20** is supported for a portion of its length between the pulleys **22** and **28** by a deck **50**, as shown in FIGS. **2**A and **2**B. Deck **50** can be made of any suitable material, preferably maple hardwood or a suitable composite material, and provides a support surface located such that the belt **20** will flex or bend downwardly until it contacts the top surface **51** of deck **50**. The thickness of deck **50** also partially determines the downward flex of the deck **50**. For example, a deck thickness of ⅝ths inches provides more of a flex than a deck thickness of ¾ths inches. Generally, the downward flex of deck **50** increases with decreasing deck thickness. The thickness of deck **50** is therefore chosen to provide a desired flex.

To reduce friction between the underside of the upper run of belt **20** and the top surface **51** of deck **50**, a low friction laminate or other coating can be applied to either the top surface **51** of the deck **50** or the underside of belt **20**, or both. Preferably, a coating of suitable wax is applied to the underside of belt **20**.

FIGS. **2**A, **2**B, **3**A, **3**B, **3**C and **4** illustrate the preferred arrangement for supporting the deck **50**. Specifically, deck **50** is secured to a lightweight steel deck support structure, indicated generally at **52**. The deck support structure **52** includes a pair of laterally spaced longitudinal support members **54** and **56** that in turn are each secured to a set of parallel crossbars **58**, **60**, **62** and **64**. Crossbars **58**, **60**, **62** and **64** extend transversely from one side of the treadmill **10** to the other. Longitudinal member **54** is attached to each of crossbars **58**, **60**, **62** and **64** with pins or rivets **66**, **68**, **70** and **72**, respectively, longitudinal member **56** is attached to each of crossbars **58**, **60**, **62** and **64** with pins or rivets **74**, **76**, **78** and **80** respectively. In turn, crossbar **60** is attached to frame portions **26** and **26'** with fasteners **86** and **88**, respectively, and crossbar **62** is attached to frame portions **26** and **26'** with fasteners **90** and **92**, respectively. Further, crossbars **58**, **60**, **62** and **64** can be constructed, either by a choice of appropriate material or thickness, to provide additional flex to deck **50**.

Deck **50** is also supported by an array of resilient members **100** mounted on crossbars **60** and **62** and at each end by a set of resilient members **102** mounted to crossbars **58** and **64**. Through the use of the resilient members **100** and **102**, the deck **50** is permitted to flex when stepped upon, resulting in lower impact loads on the user's feet. As shown in FIGS. **3**B, two of the resilient members **100** are positioned on each of the crossbars **60** and **62**.

As further shown in FIGS. **3**A and **3**C, each end of deck **50** is secured to two of the resilient members **102**. Resilient members **102** provide a downward flex as a load resulting from the impact of a treadmill user's feet on deck **50**. Resilient members **102** become compressed as the load is placed on deck **50**, with potential energy in the direction opposite the direction of compression being stored in the compressed resilient members **102**. Although downward flex of the ends of deck **50** is desired, too much downward flex is undesirable because as the user strides on the treadmill **10**, the load is alternatively placed on and taken off of deck **50**. As the load is taken off of deck **50**, the potential energy stored in the resilient members **102** forces the deck upwards.

To partially control downward flex, resilient members **103** are aligned with and placed underneath resilient members **102** as shown in FIG. **2**A. Resilient members **103** tend to bias the deck **50** upwards and to limit downward flex of deck **50**, creating a smoother surface for the treadmill user. Further, resilient members **103** may be assembled in a partially compressed position which assists in biasing the deck **50** upwards. Resilient members **103** are preferably of the same construction as resilient members **102**.

The resilient members **100** and **102** can be secured to crossbars **58**, **60**, **62** and **64** by one of a variety of methods. The members **100** are preferably secured to the deck **50** by a flat head, countersunk bolt **105** extending vertically through the top surface **51** of deck **50** and through the bore **95** on the upper portion of the members **100**, as illustrated in FIGS. **2**A, **2**B and **14**. A nut **97** on bolt **99** secures members **100** to deck **50**. In this embodiment, the lower portion of each member **100** is not connected to the crossbars **60** and **62**, thereby permitting the deck **50** to be free-floating relative to the crossbars **60** and **62**. The resilient members **102** and **103** connected to the crossbars **58** and **64** can be made of the same material as resilient members **100** and may have a different configuration than members **100**, preferably a generally cylindrical or post configuration, with a fastener receiving bore (not shown) substantially aligned along their centerlines for receiving fastener **101**. Alternatively, in place of members **100**, **102** and **103**, springs such as leaf or coil springs or tension bars can be used to perform this support function for deck **50**.

Although four resilient members **100** are shown in FIGS. **3**B, more or less of the members **100** can be provided. As a general rule, the resiliency of flex of the deck **50** can be reduced by providing more resilient members **100** to support the deck **50**. For example, if three sets of two resilient members **100** are provided instead of two sets of two resilient members **100** or by adding another crossbar with two additional resilient members, deck **50** would have slightly less flex during normal operation of the treadmill **10**.

The resilient members **100**, **102** and **103** can be made from any suitable material, including polystyrene, polycarbonate, polyurethane, polyester, or mixtures thereof, and are preferably made of polyphenylene oxide. TECS-PAK® bumpers, made of EFDYN, a division of Autoquip Corporation of Guthrie, Okla., and made of an EFDYN proprietary material including polyurethand and DuPont HYTREL® (polyester elastomers) have been especially useful as resilient members **100**, although any other suitable material may be used. In the preferred embodiment, the resilient members **100** have a free, uncompressed height in the range of 1.50 to 3 inches and the hardness of the material is preferably in the range of shore 30 A to shore 55 A and most preferably shore 47 A, the resilient members **100** also have a compressed height in the range of 0.5 to 2 inches. As illustrated in the FIGS. **3**B and **14**, the members **100** have a generally elliptically shaped configuration, preferably having an un compressed diameter in the range of about 1.5 to 3.0 inches.

The elliptical shape of the resilient members **100** has another advantage in that it results in a more comfortable running surface due to its variable spring constant k or modulus of the spring. Most resilient materials as well as conventional springs such as coil springs have a constant value of k which means that the distance the material or spring will compress is a linear function of increased force applied to the spring. This is usually represented by the formula $F=kx$ where F is the compressive force applied to the spring and x represents the distance the spring will compress. For example, if a force F of 80 pounds is applied to a conventional spring the spring might compress a distance a of 0.50 inches and if the force F is doubled to 160 pounds the spring will compress a distance of 1.00 inch. However, because of its elliptical shape, the spring constant k of the resilient member **100** is variable, that is it increases as a function of the compression distance x. In this case, the incremental distance x that the resilient member **100** will compress will decrease with increasing force F because the spring constant k will increase with the increasing compression distance x. In the example discussed above, the compression distance x of the elliptical support member **100** under the second force F of 180 pounds would be 0.875 inches instead of 1.00 inches for the coil spring having a constant k. By using springs or resilient members such as resilient member **100** having a variable k or rate of compression to support the deck **50**, the deck **50** will have a variable rate of deflection resulting in a significantly more comfortable running surface. The variable rate of deflection of the deck **50** achieves this object by permitting the deck **50** to flex downwardly a first distance, for example 0.5 inches, absorbing the initial energy of a foot striking the deck **50**. Then because of the increase in the spring constant of the resilient support members **100**, the deck **50** will proportionately deflect less under the remaining force of the foot striking the deck **50** thereby providing a firmer and more comfortable footing for the user. Thus, the above described deck support arrangement which provides for a variable rate of deflection can provide an optimum running surface where the initial energy of the user's steps are absorbed while at the same time providing a surface that neither feels mushy nor has a trampoline effect. This deck support arrangement has the further advantage of being able to comfortably accomodate users having different weights because the deck **50** will deflect about the same amount for lighter weight users as it will for heaver users giving each approximately the same feel.

It should be noted that the resilient members **100** having a variable spring constant are located in the middle of the deck **50** where the majority of the user's foot impact force will generally occur. The cylindrical resilient members **102**, which have a substantially constant spring constant k, are located at the ends of the deck **50** where the effect of the user's foot impact force is minimized and consequently will not affect to a significant degree the feel of the running surface of the treadmill **10**.

Deck **50** is also preferably assembled into position to be convex or crowned in the longitudinal direction (not shown). Specifically, the front and rear ends of deck **50** are assembled to be lower than the middle portion. Deck **50** is rigidly attached into place first at either the front end or the rear end of the treadmill. Deck **50** is then warped into place and attached to the other end of the treadmill, to have a crown in the middle of deck **50**. Deck **50** is provided with

a length slightly greater than the distance between the front and rear attachments of deck **50** to crossbars **58** and **64**, respectively, so that it can be so assembled. Deck **50** is provided with a crown to provide an additional measure of upward deflection of deck **50** when a load is placed on deck **50** since the load from the feet of the treadmill user is typically placed on the middle portion of the deck **50**. Further, the crowning of deck **50** increases its fatigue life because the overall deflection of the deck from the centerline is reduced.

As can be seen from FIGS. **2**B, **3**B and **3**C, the rear belt pulley **28** is rotated by a motor **104** during normal operation of the treadmill **10**. Motor **104** is mounted to plate **98** by conventional means, plate **98** being mounted to crossbar **62**. The rear pulley **28** is rotated by the motor **104** using a toothed drive belt **106** engaged with a complementary toothed sprocket **108** integrally molded on the outer end of body **36**. The motor **104** is preferably a variable speed A.C. induction motor having an electrical speed controller. Motor **104** has a toothed sprocket **109** secured to the motor shaft **110**. A speed reducing transmission or drive indicated generally at **111** is used to connect pulley **28** to motor **104**. By using the speed reducing transmission **111**, it is possible to use a smaller, less expensive motor **104**. The motor **104** is connected to a reduction pulley **112** by drive belt **113**. A toothed sprocket **114** is attached to the same shaft and bearing assembly **115** as gear **112** and engages toothed drive belt **106**.

Although the pulley drive arrangement including motor **104** and the speed reducing transmission **111** is shown as being engaged to the rear pulley **28**, a similar arrangement can alternatively be used to drive the front belt pulley **22**. As discussed below, the speed at which rear pulley **28** is rotated is controlled by microprocessor **300** through motor **104**, by varying the voltage and frequency to the electric controller of motor **104**. The speed is adjustable from controls on panel **18**. With this arrangement, it is therefore possible to vary the belt **20** speed at various times during the exercise routine, such as to perform a predetermined exercise profile.

An idler pulley **116** is also placed intermediate transmission **111** and rear pulley **28** along the upper length of drive belt **106**. Idler pulley **116** is supported on axle bracket assembly **117**, secured to crossbar **64**. Idler pulley **116** eliminates slack from drive belt **106** and allows for better traction between drive belt **106** and rear pulley **28** since a greater circumference of rear pulley **28** is contacted with drive belt **106**.

Further, a speed sensor **118**, illustrated in FIGS. **2**B and **3**C, is operatively connected to shaft **115** of transmission **111**. Sprocket **119** is similarly notched around its circumference, and is mounted for rotation with shaft **115**. The circumference of sprocket **119** is aligned to move through optical reader **120**, which measures the number of notches **121** which pass thereby. A pulse for each passing of notch **121** is registered, and a signal is sent to the computer **300**. The speed of belt **20** is therefore calculated by the microprocessor from the measurement of the number of pulses per given time period.

An alternative embodiment for speed sensor **118'**, partially illustrated in FIG. **15**, is provided on idler pulley **116** to indirectly measure the speed of the treadmill belt (and consequently the speed of the treadmill user). An end of idler pulley **116** has two magnets **122** and **122'** mounted thereon. The magnets **122** and **122'** are mounted along a line passing through the center point of that axle on which idler pulley **116** rotates and are positioned equidistant from the center point. The two magnets **122** and **122'** are mounted so that during a point of the rotation of idler pulley **116**, each becomes aligned with a Hall effect sensor (not shown). Each time either magnet **122** or **122'** is aligned with the Hall effect sensor, a pulse is registered from the change in magnetic flux to the Hall effect sensor and a signal is sent to the computer **300**. The speed of belt **20** is therefore calculated by the microprocessor from the measurement of the number of pulses per minute. The use of two magnets **122** and **122'** at opposite sides of each other on idler pulley **116** allows for more accurate measurement of the speed than if only one magnet were used. Further, the use of the two magnets **122** and **122'** allows for the more accurate calculation of acceleration, if desired.

Another alternative embodiment for speed control not shown in the drawing would use an induction motor controller which delivers a fixed speed for a given control signal i.e., treadmill computer **300** sends a given number of pulses (which equates to a pre-determined speed) to the motor controller. In turn, the motor controller will maintain this motor speed within an acceptable tolerance limit. This system is referred to as an open loop system.

Although the pulley drive arrangement including motor **104** and the mechanical transmission **111** is shown as being engaged to the rear pulley **28**, a similar arrangement can alternatively be used to drive the front pulley **22**. However, the use of motor **104** to drive the rear pulley **28**, and the mounting of motor **104** intermediate the front pulley **22** and rear pulley **28** within treadmill enclosure portions **12** and **12'** accrues several novel advantages. Known designs of treadmills have not placed the drive motor intermediate the front and rear pulleys because the size of the drive motor was too large to be placed intermediate the smaller sized pulleys. Previously known arrangements housed the drive motors in an appendage enclosure of generally greater height than the rest of the treadmill enclosure to accommodate the motor size. Placement of the motor **104** as illustrated eliminates the need for an appendage enclosure of greater height.

Further, a slack portion on the belt **20** is eliminated by a rear pulley drive arrangement compared to a front pulley drive arrangement. Specifically, with a front pulley drive arrangement, a slack portion would tend to develop on the upper or running length of the belt since the front pulley was pulling the bottom surface of the belt towards the front of the treadmill. The slack portion would tend to increase wear of the belt. With the rear pulley drive arrangement, the same effect of the pulley is seen but with the slack portion appearing on the bottom length of the belt and the upper length at the belt being relatively taut. The treadmill user is therefore not stepping on a relatively slack section of belt **20**, which increases fatigue life and increases smooth operation of treadmill **10**.

Returning to the description of the support mechanism for deck **50** as shown in FIGS. **2**A–B, the back portion of deck **50** is attached to crossbar **64** with an angle iron **123**. Angle iron **123** is secured to crossbar **64**, and is also attached between resilient members **102** and **103** by fasteners **101**. Second angle iron **124** extends between resilient members **102** supporting the back portions of deck **50**, and is positioned between the top of resilient members **102** and deck **50**.

At the front end of deck **50**, third angle iron **132** rests between the resilient members **102** and **103** and is secured to the crossbar **58**. Fourth angle iron **130** extends between resilient members **102** and is also attached to resilient members **102** and **103** by fasteners **101**. Fourth angle iron

130 is positioned between the top of resilient members 102 and deck 50. In turn, the fourth angle iron 130 is also attached to crossbar 58 through linkage assemblies indicated generally at 134 and 136. Further, members 54 and 56 are attached to fourth angle iron 130 by pins or rivets 128, as shown in FIG. 3A.

The linkage assemblies 134 and 136 include blocks 138 and 140, respectively, that are attached to fourth angle iron 130 by any suitable means. Blocks 138 and 140 are cooperatively attached to stationary blocks 142 and 144 through a pair of links 146 and 148, respectively. Stationary blocks 142 and 144 are attached to the crossbar 56. When weight is placed on deck 50, the front portion of deck 50 will flex downward under the weight. The links 146 and 148 allow the deck 50 to flex downwardly and in a forward direction. Blocks 138 and 140 also move downwardly and slightly forward, while stationary blocks 142 and 144 remain stationary. The purpose of the linkage assemblies 134 and 136 is to provide additional flexure and to permit forward movement of the deck 50 during operation of the treadmill.

A simpler, preferred method for allowing deck flexure and movement is illustrated in the partial cross-section of FIG. 2C. In FIG. 2C, each linkage and block assembly just described is replaced by a single rubber or elastomeric member 400 mounted between the deck 50 and frame crossmember 402 which is affixed to the treadmill frame portions 26 and 26' (not shown). Member 400 includes an elastomeric body 404 having a generally upright cylindrical shape. Member 400 also includes a threaded metal insert 406 for receiving a countersunk mounting screw 408 used to fasten deck 50 to member 400. Member 400 also includes a threaded member 410 protruding axially from the bottom of member 400. The threaded member 410 is used to secure member 400 to crossmember 402. Member 410 can be attached to the crossmember 402 by inserting it into a threaded aperture 412 in the member 402 or by inserting it through a non-threaded aperture and securing it with a nut (not shown). A suitable elastomeric member 400 is produced by the Lord Company of Erie, Pa., Part No. J11729-177.

Member 400 is preferred because it is mechanically simpler than the linkage system already described. Additionally, member 400 permits deck movement in both the lateral and longitudinal horizontal directions while limiting vertical movement.

As illustrated in the Figures generally, and in particular FIGS. 2A, 3A and 4, a lift or inclination mechanism indicated generally at 150 for the treadmill 10 is provided to permit inclination of the deck 50. Lift mechanism portions 152 and 152" are similarly constructed with like reference numerals referring to like parts. In FIG. 2A, lift mechanism 152 includes an internally threaded sleeve 154 welded or otherwise permanently attached to a sprocket 156. When sprocket 156 is rotated, the sleeve 154 will travel upward or downward depending on its direction of rotation on a non-rotating, threaded screw or post 158. The screw 158 is in effect forced downward against the floor F resulting in the raising of the front portion of treadmill 10 when, for example, the sprockets 156 are rotated in a first direction. As illustrated in FIG. 2A, screw 158 extends upwardly through enclosure 12. Shroud 159 conceals the screw 158 from the user for safety and aesthetic reasons. Shroud 159 is attached at its lower end to enclosure 12 and at its upper end and or at its sides to side post 14.

Rollers 160 and 160' can also be rotatably attached to the lower end of non-rotating screws 158 and 158', respectively. As the roller 160 is forced downward against the floor F, the treadmill 10 will roll slightly to compensate for the inclination of the treadmill 10. The inclination of treadmill 10 is thereby facilitated by this slight movement of roller 160. Rollers 160 and 160' are rotatably secured together on axle assembly 161, with axle assembly 161 being secured to posts 158 and 158' by brackets 163 and 163', respectively.

Because the frame 26 is attached through a bracket 162 and bearing assembly 164 to sleeves 154, as sleeves 154 are rotated downwardly on the screw 158, the frame 26 will incline in an upward direction. The lift mechanisms 152 and 152' are located substantially opposite each other on either sides of the treadmill 10. Both lift mechanisms 152 and 152' are operatively connected to an inclination motor 166. Sprockets 156 and 156' are attached to sleeves 154 and 154' at the same height so that a chain 168 can both be operatively connected to the motor 166 by a sprocket 170. Chain 168 is formed in a serpentine arrangement on sprockets 156 and 156', motor sprocket 170 and guide sprocket 171. The motor 166 is mounted on a base plate 172, which extends between crossbar 58 and mounting plate 174. Mounting plate 174 itself extends between frame portions 26 and 26'. By this arrangement, the motion upward or downward on both non-rotating screws 158 and 158' will be the same, and as a result both sides of the treadmill 10 will be inclined to the same degree.

Any suitable inclination can be achieved by lift mechanisms 152 and 152', preferably in the range of zero to eighteen percent. As discussed below, the degree of inclination desired by the treadmill user may be controlled within the predetermined range by controls on panel 18

The degree of inclination chosen by the treadmill user is further controlled by a potentiometer 176 connected to microprocessor 300. Potentiometer 176 is attached to frame 26. Potentiometer 176 also comprises a gear 178 which is mounted to travel up or down screw 158 as treadmill 10 becomes more or less inclined, respectively. The rotation of gear 178 therefore is used to calculate the degree of inclination as discussed below. Additionally, limit switches (not shown) which sense the upper and lower degrees of inclination, respectively in a known arrangement. The limit switches are mounted to screw 158 which are activatable by sleeves 154 respectively when the sleeves move into contact therewith. The limit switches are therefore a redundant inclination sensing device to potentiometer 176. Once the maximum upper or lower degree of inclination is reached as sensed by either potentiometer 176 or the limit switches, the microprocessor shuts off motor 166.

FIG. 3D illustrates a preferred embodiment of the lift mechanism just discussed. In FIG. 3D, the chain 168 of FIG. 3A has been replaced by a toothed belt 420. The toothed belt 420 drives a pair of molded pulleys 422, each of which integrally includes a plurality of teeth 424 and an internally threaded sleeve 426. Belt 420 rotates around pulleys 422, an idler pulley 430 and is driven by a drive pulley 428. Pulleys 428 and 430 are generally equivalent to sprockets 170 and 171 of FIG. 3A but are, of course, designed for operation with a toothed belt instead of a chain.

The operation of the preferred lift mechanism is similar to that already discussed in conjunction with FIG. 3A except that the mechanism is designed for a 0 to 15 percent grade range. The molded pulleys and belt provide for quieter lift mechanism operation and eliminate the need for lubrication of the chain 168 shown in FIG. 3A.

Another method for controlling the inclination of treadmill 10 is through the use of time. This method eliminates the need for potentiometer 176. In this method, lift motor

166 will raise the treadmill to the maximum height limit switch (not shown) is activated. The time it takes for lift mechanism **152** to go from high to low is divided into 15 equal parts and stored in non-volatile memory. Each division is equal to a 1% incline. This procedure is known as calibration. Once calibrated, percent elevation is controlled by treadmill computer **300** in units of motor lift time.

The embodiment of the treadmill **50** as discussed above in connection with FIGS. **1–6** is particularly useful in the health club environment where an exercise treadmill **50** can be subject to very heavy usage. However, there are situations where cost or potential usage factors can make other treadmill structures desirable. To that end, another embodiment of the invention is illustrated in FIGS. **19** and **20**. FIG. **19** is a sectioned side view and FIG. **20** is a sectioned top view of an exercise treadmill **600**. Components of treadmill **600** that are similar to the components of treadmill **10** will be referred to using the same reference numerals The treadmill **600** includes a deck **50** located between a pair of belt pulleys **602** and **604**. For simplicity the belt, which is similar to the belt **20** is not shown. A motor **606** drives the front pulley **604** via a drive belt **608** and a pair of support posts **14** and **14'** are used to support a display and control panel (not shown.). Support for the deck **50** is provided by a pair of cylindrical resilient members **102** at each end of the deck **50** and a pair of elliptically shaped resilient members **100** approximately midway between the pulleys **602** and **604**. To simplify construction, the resilient members **100** and **102** are mounted on an upper rail **610** and **612** of a a pair of formed steel longitudinal support members **614** and **616** which form part of the frame of the treadmill **600**. By mounting the resilient members **100** and **102** on the longitudinal support members **614** and **616**, cross members can be eliminated. As shown in FIG. **19**, the resilient members **100** and **102** are secured to the lower rails **610** and **612** by sets of mounting brackets **618–622**. It should also be noted that the use of the elliptically shaped resilient members **100** located between the ends of the deck **50** provides the same variable deflection rate as described above in connection with the treadmill **10** thereby contributing to the comfort of running on the treadmill **600**.

A third embodiment of a treadmill structure which is particularly suitable for the home market segment is illustrated in FIGS. **21–23**. FIG. **21** is a sectioned side view, FIG. **22** is a sectioned top view and FIG. **23** is a sectioned end view of a treadmill **630**. Here, the treadmill frame includes a pair of longitudinal support members **632** and **634** upon which a pair of belt pulleys **636** and **638** are rotatably mounted. Again for simplicity of depiction, the belt **20** is not shown. The longitudinal support members **632** and **634** are preferably composed of extruded aluminum and have a cross section as illustrated in FIG. **23** that is generally boxshaped with a top flange **640** or **642**. A central channel member **644** running the length of the treadmill **630** is connected to the bottoms of the longitudinal support members **632** and **634** and provides lateral structural support for the treadmill **630**. Spaced evenly along the top flanges **640** and **642** of the longitudinal support members **632** and **634** are four pairs of eight elliptically shaped resilient members **100**. The resilient support members **100** provide support for a deck **50**. FIG. **22** is used to illustrate the relative locations of the support members **100** and consequently are shown in releif below the deck **50** this figure. The resilient support members **100** in the treadmill **630** are preferably smaller than the resilient support members **100** in the treadmill **10** having an uncompressed height of about 1.5 inches. The resilient support members **100** located at each end of the deck **50** are secured to the deck **50** by a screw **646** inserted through the deck **50**, as shown in FIG. **21**, in order to limit the longitudinal movement of the deck **50**. The middle sets of resilient members **100** are not connected to the deck **50** so as to facilitate limited longitudinal movement of the central portion of the deck **50** as it flexes downwardly under the impact of a user's feet on the belt. As with the treadmills **10** and **600**, the use of elliptically shaped resilient members **100** having a variable spring constant provides for an exceptionally comfortable running surface.

An impact sensing mechanism **180**, illustrated in FIGS. **7** and **8**, is used to provide a measurement of the relative impact force of the user's feet on deck **50**. Impact sensor **180** is preferable provided at or near the midpoint of deck **50** and is mounted substantially horizontally on crossbar **62** and includes a deflection arm **181** which is resiliently biased by spring **182** against the lower surface of the deck **50**. A pair of rubber or plastic elements **183** are mounted on the end of the arm **181** in contact with the lower surface of the deck **50**. By this arrangement, as the deck **50** flexes downwardly when the user's feet impact the deck, the arm **181** will also be deflected downwardly. The arm **181** is configured with a &-shaped portion **179** which contains a pair of magnets **184** and **184'**. As shown in FIG. **8**, the magnets **184** and **184'** are mounted in a substantially vertical array on opposite sides of the U-shaped portion **179**.

The impact sensor **180** also includes a cantilevered sensor support member **185** that is rigidly secured to crossbar **62**. Mounted on the free end of the support member **185** is a Hall effect sensor element **186** which is used to detect the position of the free end of the arm **181** relative to the stationary sensor support member **185**. As shown in FIG. **8**, the Hall sensor element **186** is positioned substantially along the same vertical line as the magnets **184** and **184'**. The Hall effect sensor element **186** is effective to detect changes in magnetic flux generated by magnets **184** and **184'** and translates these changes into an electrical signal. Therefore when the deck **50** (and consequently arm **181**) flexes downwardly, the position of the sensor element **186** relative to magnets **184** and **184'** will change and an analog electrical signal is generated by the sensor element **186** that represents the deflection of the deck **50**. Also attached to the sensor support member **185** is a printed circuit board **187** that contains various electronic circuit elements which are effective to transmit a filtered version of the Hall effect sensor signal to the computer **300** where a resident analog to digital converter converts the analog signal into a digital signal that represents the deflection of the deck **50**. In the preferred embodiment of the invention, this digital deflection signal is sampled every 5 milliseconds and the value is stored in the memory of the computer **300**. Once, each 1.5 second period the maximum value of the digital deflection signals stored in memory is identified by the computer **300** and used to calculate the impact force.

In particular, the computer **300** uses the maximum deflection value to calculate the impact force by comparing the measured deflection with corresponding force values, such as set forth in FIG. **9**. FIG. **9** has along its X-axis values representing the deflections of the deck **50** in inches and, along the Y-axis, corresponding impact force values in pounds. These impact force values can be derived by calculating the force required to compress the resilient members **100** in combination with the force required to deflect the deck member **50**. Alternatively, these force/deflection values may be determined empirically.

Computation of the impact force by the computer **300** can be simplified by forming linear approximations of the curve

"A" shown in FIG. **9** and using linear equations to calculate the impact force for each deflection value. As an example, the curve in FIG. **9** can be approximated by the following linear equations: for 0.0 to 0.4 inch deflections, y=400x (illustrated as line "B"); and for 0.4 to 0.9 inch deflections, y=640x−96 (illustrated as line "C").

Once the impact force value is calculated by the computer **300**, normalized impact force value based on the users weight can be calculated. Specifically, before or during use of the treadmill, the user enters his weight via the control panel **18** into the memory of the computer **300**. The impact force value is then divided by the user's weight by the microprocessor **300** to yield a normalized or relative impact force value.

In one embodiment of the invention, the resulting relative impact force value is displayed graphically to the user on the vacuum fluorescent display **376** of FIG. **16**. Two examples of the use of display **376** to display relative impact force values are illustrated in FIG. **17**. In the upper example of the display **376** in FIG. **17**, the left hand portion indicated at **188** is used to display the word "LOW," and the right hand portion indicated at **189** is used to display the word "MED" with a 14-segment bar graph **190** generated between the illuminated words "LOW" and "MED." The greater the relative impact force value, the more segments **190** are illuminated. In the preferred embodiment, the display in FIG. **17** is autoscaled by the computer **300** into two ranges so that when the relative impact force is between 0.8 and 1.75, "LOW" and "MED" are displayed, and when the relative impact force is between 1.75 and 3.0, the words "MED" and "HI" are displayed at the left hand portion **188'** and at the right hand portion **189'** of display **376** as shown in the lower example of FIG. **17**. As the relative impact force in each range increases, the number of illuminated segments **190** are increased from left to right. In this embodiment, the relative impact force is displayed on the display **376** only during the actual operation of the treadmill **10** after operating instructions have been displayed, the user has entered his weight and selected an exercise program and the speed of the belt **20** has reached 4.0 miles per hour. As an alternative, the user can be provided with a graphical display of relative impact force by a vertical column of, preferably, ten LEDs **192** as shown on the panel **18** of FIG. **16**. The autoscaled range effect can be simulated by using tricolored LEDs where for example green would indicate the low scale, yellow would indicate the medium scale and red would indicate the high impact scale. Corresponding to the previously described vacuum fluorescent display **376**, the individual LED segments in the display **192** would be illuminated from bottom to top as the relative impact force increased within each scale.

Calibrating the impact sensor is accomplished in the preferred embodiment as shown in FIG. **8** by utilizing a calibration screw **193** which is threaded into the arm **181**. The end of the screw **193** abuts the sensor support member **185** and calibration is accomplished by rotating the screw sufficiently to move the arm **181** downwardly in 0.125 inch increments. The digital value of the signal from the Hall effect sensor **186** is recorded in a table in the memory of the computer **300** for each 0.125 inch increment. This table is then used by the computer **300** to determine from the digital deflection signals the actual deflection of the deck **50**.

A belt position sensing mechanism such as **200** or **200'** as shown in FIGS. **10–13** can be used to provide for positive lateral tracking of the belt. As a result, the belt is prevented from laterally sliding too far to one side of the pulley so that it contacts a frame member or other portions of the structure, resulting in increased belt wear or damage to the belt. This arrangement also decreases the sensitivity of the belt to improper adjustment and side loading for which the lateral position of the belt is corrected. The belt position sensing mechanism **200** or **200'** senses the position of the belt and causes a front pulley pivoting mechanism indicated at **202** to move the belt back into proper position.

The belt position sensing mechanism **200** or **200'** is capable of sensing whether the belt **20** has laterally moved too far to either the right or the left, or whether the belt **20** is positioned within a proper range of positions for normal operation. The belt position is measured by the position of one lateral edge of the belt, the same edge being used to measure the left and right lateral movement of the belt **20**. If the belt **20** has moved too far to the left so that the edge of the belt is out of the proper range, the belt is laterally moved to the right towards and into the proper range by the mechanism **202**. Similarly, if the belt **20** has moved too far to the right so that the edge of the belt is out of the proper range, the belt **20** is laterally moved to the left towards and into the proper range.

The preferred embodiment of the belt position sensing mechanism **200** is illustrated in FIGS. **11–12**, and can be located along an edge of the upper or lower surface of belt **20**. Preferably, the belt sensing mechanism **200** or **200'** is located along an edge of the lower run of belt **20**, and is preferably mounted on the left, lower front portion of the belt **20**.

Belt position sensing mechanism **200** is mounted on a bracket **204** which is attached to the frame portion **26**. Belt sensing mechanism **200** of FIG. **11** is similar in design and operation to the impact sensing mechanism **180** of FIGS. **7** and **8** discussed above, Belt sensing mechanism **200** is calibrated with screw **203**, as described above in connection with impact sensing mechanism **180**.

The sensing mechanism **200** includes a sensor arm **201** with a rubber or plastic element **205** biased towards belt **20** by a torsion spring **206**. Alternatively, a pin or coil spring (not shown) could be used in place of element **205**. The pin or spring would extend vertically downward and be resiliently biased towards belt **20**. With this arrangement, the element **205**, and hence the arm **201**, will effectively track the belt **20** as it moves from side to side. The use of a coil spring in place of a rigid finger, arm or pin is to prevent damage during handling or transit of the treadmill. Experience has indicated that rigid members bend when subjected to abuse, rendering the sensor **200** inoperable. The coil spring deflects when loaded, and when the load is released, the spring returns to its normal position.

The sensor arm **201** includes a U-shaped portion **207** containing a pair of magnets **208** and **208'**. As shown in FIG. **11**, the magnets **208** and **208'** are mounted in a substantially horizontal array at opposite ends of the U-shaped portion **207**.

The sensing mechanism **200** has a sensor support member **209** which is rigidly mounted to bracket **204**, and which is stationary with respect to the sensor arm **201**. At the free end of member **209**, a Hall effect sensor **210** is positioned substantially in alignment with the magnets **208** and **208'**. As is conventional, sensor **210** detects changes in magnetic flux generated by the magnets **208** and **208'** and translates these changes into an electrical signal. Therefore, when the belt **20** (and consequently sensor arm **201**) is within the proper range, a predetermined electrical signal is generated by sensor **210**. As belt **20** (and consequently sensor arm **201**) moves out of the proper range, the magnetic flux changes as

sensor **210** moves relative to the magnets **208** and **208'**, producing different electrical signals. Sensor **210** is connected to microprocessor **300** via a printed circuit board **211** which serves to condition the position signals generated by the Hall effect sensor **210**. As will be described below, the signals from the sensor **210** can be used by the pivoting mechanism **202** to keep the belt **20** within a desired range.

As discussed above, if the belt **20** moves either to the left or right, sensor arm **201** travels with the belt **20**. The movement of sensor arm **201** can be divided into three ranges. illustrated with respect to the alternative embodiment in FIG. **12**. Specifically, there is a range of movement in FIG. **12**, that is "proper," labelled as range "a", and no correction is necessary. If sensor arm **201** moves either left, labelled as range "b", or right, labelled as range "c", out of the proper range, correction of the lateral position of the belt is necessary.

Lateral tracking of belt **20** can be improved by dividing the range of travel of sensor arm **201** into five regions as indicated on FIG. **12**A. These regions correspond to belt "within limit" conditions as indicated by the region labelled WL, minor deviations of belt travel left or right as indicated by the regions labelled TL and TR, respectively, and major "beyond limit" deviations of belt travel left or right as indicated by the regions labelled BLL and BLR, respectively. Positional information provided from these five sensing regions can be used in conjunction with an indication of belt speed to provide optimal belt tracking correction as a function of speed and position by varying the duty cycle of tracking motor **248**. In such a control regime, the duty cycle of the motor **248** should increase with greater belt speed and greater deviation from the ideal path of travel.

One example of the preferred tracking scheme linearly increases tracking motor duty cycle with increasing belt speed. For example, consider belt speeds of 1.5, 4 and 7 miles per hour. When belt speed is in the 1.5 mile per hour range, a 15 percent motor duty cycle is used to correct tracking deviations in the TL or TR regions. When tracking deviations enter the BLL or BLR regions, the duty cycle is increased to 30 percent. Four mile per hour corrections employ a 22 percent duty cycle when deviations are in the TL or TR regions and a 57 percent duty cycle when deviations are in the BLL or BLR regions. Seven mile per hour corrections employ a 50 percent duty cycle when deviations are in the TL or TR regions and a 90 percent duty cycle when deviations are in the BLL or BLR regions.

In each case, the motor is turned on for one second, followed by an off period of the appropriate length to yield the required duty cycle. Within regions WL, TL and TR, the belt position is sensed every second and corrections initiated if required. When the belt position is in the BLL or BLR region, sensing and correction is performed only at the end of the "off" period of each cycle. Preferably, the motor **248** remains switched off following belt movement from BLL or BLR to TL or TR to permit the belt **20** to recover from the more severe belt adjustment just performed.

The effects of a variable duty cycle tracking regime operating at 1.5, 4 and 7 miles per hour are illustrated in FIGS. **12**B–**12**D. In FIGS. **12**B–**12**D, the horizontal dashed axes represent ideal belt tracking, while the solid lines represent the belt position resulting from attempted tracking corrections made in response to an initial "beyond limits" perturbation. The available motor duty cycles for tracking motor **248** are indicated in parentheses. In each case, it can be seen that the optimized multiple duty cycle control region described in the preceding paragraph reaches optimal tracking as fast or faster than single duty cycle or nonoptimized multiple duty cycle control regions and that, in many cases, the optimized multiple duty cycle regime reduces control "overshoot" problems. Other embodiments may employ a greater number of sensing regions and/or duty cycles to obtain even "smoother" control characteristics. These multiple duty cycle control regimes are also suitable for use with the alternative embodiment of the position sensor described below.

In an alternative embodiment, illustrated in FIG. **13**, sensing mechanism **200'** has sensor arm **215** with an elongated portion **217**, a vertically downward extending leg **219** attached to one end of elongated portion **217** and a vertically upwardly extending leg **212** attached to the opposite end of elongated portion **217**. Sensor arm **215** is substantially cylindrical at all portions. As seen in FIG. **13**, upward leg **212** is mounted for rotation on beam **213**. Beam **213** is secured to the frame portion **26**. Upward leg **212** extends through bushing **214**, having a cylindrical sleeve **216** therethrough. Cap **218** and washer **220** are connected to the uppermost end of upward leg **212**, with cap **218** partially extending into sleeve **216**. A torsion spring **224** is chosen of sufficient length so that it is partially compressed between the bottom of bushing **214** and the bend between upward leg **212** and elongated portion **217**. Sensor arm **215** is therefore biased towards belt **20** by torsion spring **224**, and downward leg **219** contacts and is biased against belt **20**. By this arrangement, when belt **20** moves to the right, downward leg **219** is still biased against belt **20**, and when belt **20** moves to the left, downward leg **219** is pushed outward against the torsion spring **224**.

The detection of whether the sensor arm **215** has moved out of the proper range is accomplished by a dual Hall effect sensor **226**. Hall effect sensor **226** is used to detect the position of sensor arm **215** by using dual sensors **228** and **228'** connected to a printed circuit board **230**. Printed circuit board **230** is directly mounted on the crossmember **213** and sensors **228** and **228'** are attached to the lower end of board **230**. Sensors **228** and **228'** are positioned to be aligned substantially along the same horizontal line on board **230**. Magnets **232** and **232'** are held in cup **234** placed on sensor arm **215** and are positioned on opposite sides of sensors **228** and **228'**. As is conventional, sensors **228** and **228'** detect changes in magnetic flux around them and translate these changes into changes in electrical current. Therefore, when the belt **20** (and consequently sensor arm **215**) is within the proper range, a predetermined electrical signal is generated by sensors **228** and **228'**. As belt **20** (and consequently sensor arm **215**) moves out of the proper range, the magnetic flux changes as magnets **232** and **232'** move out from between sensors **228** and **228'**, translating into a different generated electrical signal. The printed circuit board **230** is connected to computer **300**. As the lateral position of belt **20** is being corrected, the Hall effect sensor **226** is used to determine whether the belt **20** is within the proper range. If the belt **20** is back within the proper range, the computer **300** takes no further action in correcting the lateral position of belt **20**.

If the lateral position of the belt **20** is to be corrected, the computer **300** operates front pulley pivoting mechanism **202**, as discussed below. As shown in FIGS. **2**A, **3**A, **4** and **10**, front pulley pivoting mechanism **202** is used to pivot one end of front pulley **22** either towards the front or towards the rear of treadmill **10**. Specifically, one end of front axle **24** is placed into pivot block **242** which is preferably located at the right end of front axle **24**, as illustrated in FIG. **3**A. Pivot block **242** is attached to frame **26** by pivot pin **244**. As front pulley **22** pivots, pivot block **244** also pivots. The opposite,

left end of front axle **24** is therefore moved to pivot the front pulley **22**. The left end of the front axle **24** is placed into guide block **246**. As guide block **246** is made to move towards the front of treadmill **10**, front pulley **22** also pivots forward, as guide pivot block **246** is made to move towards the rear of treadmill **10**, front pulley **22** also pivots rearward.

The pivoting of front pulley **22** is used to correct the lateral position of belt **20** in a known manner. If belt **20** is moving too far to the left, the front pulley **22** is pivoted towards the front of treadmill **10**. If belt **20** is moving too far to the right, the front pulley **22** is pivoted towards the rear of treadmill **10**. Since the belt **20** will tend to move towards the lateral direction where belt tension is lower, the front pulley **22** will be pivoted to create a slack on the side of the belt **20** towards which lateral movement of the belt is desired.

Movement of guide block **246** is controlled by a tracking motor **248**, attached to the frame portion **26**. Long threaded bolt **250** is attached to motor **248** and extends longitudinally towards the front of treadmill **10**. Guide block **246** is moved by rotation of bolt **250**, which extends through nut **252** in guide block **246**; bolt **250** is attached to guide block **246** by fastener assembly **254**, depending on the rotation of bolt **250**. If guide block **246** is to be moved towards the front, motor **248** rotates the bolt **250** clockwise, and if guide block **246** is to be moved towards the rear, motor **248** rotates the bolt **250** counterclockwise. As discussed below, computer **300** causes motor **248** to rotate bolt **250** for a predetermined rotation to move guide block **246** for a predetermined distance, resulting in the desired pivot.

As belt **20** begins to move in the desired direction, guide block **246** is moved back to its starting position, substantially transverse across treadmill **10**, by rotating bolt **250** in the opposite direction.

FIG. **16** is a functional block diagram illustrating the preferred embodiment of an electronic system using a computer or computer **300** to control the various functions of the treadmill **10**. Preferably the computer **300** is composed of two or more interconnected Motorola 6805 or 68HC11 microprocessors. As previously described, the belt **20** is driven by the rear pulley **28** which in turn is driven through the transmission **111** by the A.C. motor **104**. The speed of the motor **104**, and hence the belt **20** is controlled by the computer **300** through the application of control signals from the computer **300**. Single phase **110** volt A.C. power is applied to the A.C. belt drive motor **104** from a conventional A.C. power source, functionally shown at **304**, over an A.C. power line **306** which is connected to a terminal of the A.C. power source **304**. As previously indicated, the A.C. motor **104** is mechanically connected to the rear pulley **28**, as functionally represented by a shaft **302**, and is effectively controlled by digital signals from the computer **300** transmitted over a line **308**. Specifically, line **308** is used to provide a speed signal to an A.C. motor controller **310** which in turn admits the A.C. current on the line **306** to the motor **104**. In the preferred embodiment the A.C. motor. **104** and controller **310** are combined in a Emerson Electric 1.5 horsepower motor-controller unit. In this embodiment, the A.C. motor controller **310** accepts digital speed signals from the computer **300** over the line **308** and alters the frequency and voltage of the A.C. current to the motor **104** in such a manner to cause the motor **104** to rotate at the desired speed. In addition, on/off motor signals can be transmitted to the controller **310** over a line **312** from the computer **300** and signals indicating the operating condition of the controller **310** are transmitted over a line **314** to the computer **308**.

FIG. **16** also illustrates the operation of a system for sensing the speed of the belt **20**. The speed sensor **121** senses the rate of rotation of the pulley **116** shown in FIGS. **3**C and **11** and provides a series of pulses to the computer over a line **322** which represents the speed of the belt **20**.

Control of the speed of the belt **20** by the computer **300** is provided in the preferred embodiment of the invention in the following manner. The computer **300** compares the actual speed of the belt **20** as measured by the speed sensor **118** to a desired value. If the actual speed differs from the desired value the computer **300** transmits the appropriate speed signal over line **308** to the controller **310** to adjust the speed of the motor **104** to the desired value of treadmill **10**. An additional feature which can be included is the mechanical brake functionally represented by a box **316** inserted in the shaft **302**. The object of the brake **316** is to prevent the read pulley **28**, and hence the belt **20**, from moving when the motor **104** is off. Control of the brake **316** is provided by a signal from the computer **300** over a line **318**.

Also functionally illustrated in FIG. **16** is the belt tracking mechanism which includes the sensor **226** that provides an indication of the lateral position of the belt **20** on the front pulley **28**. Signals from the sensors **200** and **226** are transmitted as represented by a line **340** to the computer **300**. Upon receipt of a left or right deflection signal from the tracking sensor **226**, the computer **300** will transmit appropriate control signals over a pair of lines **332** and **334** through interface **301** from lines **331** and **333**, respectively, to activate the tracking motor **248** which in turn causes the front pulley **28** by means of the front pulley pivoting mechanism **202** to pivot longitudinally in order to center the belt **20** on the pulley **28**. A triac **336**, a SPDT switch **338**, a left limit switch LL and a right limit switch LR are inserted in the A.C. power line **306** ahead of the tracking motor **248**. The tracking sensor **226** transmits a signal over a line **340** to the computer **300** which represents the lateral deflection of the belt **20** on the pulley **28**. In response, the computer **300**, by means of a signal transmitted over the line **332** from the interface **301**, places triac **336** in a conducting state and switches the polarity of the SPDT switch **338** such that the A.C. current is applied through either the LL or LR switch to drive the tracking motor **248** in the appropriate direction to center the belt **20**. Limit switches LL and LR also serve to effectively limit the amount of longitudinal travel of the axle **24** of the front pulley **28** by cutting off current to the tracking motor **248** when the predetermined limits are exceeded. An indication of this condition is provided to the computer **300** by a current detecting resistor **342** which is connected to the computer **300** by a line **344**.

Inclination of the treadmill **10** is controlled by the computer **300** in a similar manner. As previously described, the inclination sensor or potentiometer **176** detects the inclination of the treadmill and transmits an inclination signal over a line **346** to the computer **300**. In response to the inclination signal on the line **346** the computer **300** applies control signals over a pair of lines **348** and **350** to control the inclination motor **166** so as to adjust the inclination of the treadmill to the angle selected either by the user or an exercise program contained in the computer **300**. This is accomplished by a triac **352** and a SPDT switch inserted in the A.C. power line **306**. When it is desired to increase or decrease the inclination of the treadmill **10**, the triac **352** is placed in a conducting condition by a signal on line **348** and the A.C. current is transmitted through the SPDT switch in response to a signal on line **350** and then through either an upper limit switch LU or a lower limit switch LD to the A.C. inclination motor **166**. The computer **300** will switch off the triac **352** when it receives a signal over the line **346** indicating that the treadmill is at the desired inclination.

Upper and lower limits of operation of the inclination motor **166** are provided by switches LU and LD which serve to disconnect the A.C. current on the line **306** which serve to disconnect the A.C. current on the line **306** inclination motor **166** when predetermined limits are exceeded. An indication of this out of limit condition is transmitted to the computer **300** by a current detecting resistor **356** over a line **358**.

As illustrated in FIG. **16**, each of the A.C. motors **104**, **166** and **248** are connected to a return power line **359** which in combination with the power line **306** completes the A.C. circuit with the 110 volt A.C. power source **304**.

Additionally connected to the computer **300** are the various elements of the control display panel **18**. For simplicity the signals transmitted to and from the computer **300** to the control-display panel **18** are represented by a single line **360**. In the preferred embodiment of the invention the panel **18** includes a large stop switch **362** which can readily be activated by a user, that is connected through the interface **301** to computer **300** by a line **361** and a line **363**. This switch **362** is provided as a safety feature and activation by the user will result in the computer **300** causing the A.C. belt motor **104** to come to an immediate stop and can also activate the brake **316**.

A number of numeric displays are also included on the panel **18** including: an elapsed time display **364** which displays the elapsed time of an exercise program controlled by the computer **300**; a mile display **366** which displays the simulated distance traveled by the user during the program; a calorie display **368** which can selectively display, under control of the computer **300**, a computation of the current rate of user calorie expenditure or the total calories expended by the user during the program a speed display **370** representing the current speed of the belt **28** which is transmitted to the computer **300** from the speed sensor **118** over the line **322**; an incline display **373** representing the inclination of the treadmill **10** in degrees; and a terrain or a "hill" display **374** which is similar to the LED display disclosed in U.S. Pat. No. 4,358,105. In the preferred embodiment, the computer **300** operating under program control will cause the treadmill to incline so as to correspond to the hills displayed on the terrain display **374**. In this manner the user is provided with a display of upcoming terrain. A scrolling alpha-numeric vacuum fluorescent display **376** is also provided for displaying operating instructions to the user, or as previously described, displaying relative impact forces.

Along with the displays **364–376**, the panel **18** is provided with an input key pad **378** with which the user can communicate with the computer **300** in order to operate the treadmill **10** as well as program keys indicated at **380** to select a desired exercise program such as manual operation, a predetermined exercise program or a random exercise program In the preferred embodiment, incline and speed keys indicated at **382** on panel **18** can be used to override the predetermined speeds and inclines of a user selected exercise program.

FIG. **18** illustrates a treadmill pulley body mold **500** useful for molding large diameter plastic pulleys such as pulleys **22** and **28**. Mold **500** is shown in an "open" position for purposes of illustration. Mold **500** includes three mold members **502**, **504** and **506**, each of which shapes about one-third of a molded pulley such as pulley **28**. In this example, pulley portions **108**, **32** and **34** (see FIG. **6**) are molded in mold members **502** and **504**, and pulley portion **34'** is molded in mold member **506**. A core **508** is moveable through members **502**, **504** and **506** and causes the formed pulley to be formed with about a ⅓-inch wall thickness as shown in FIG. **5**. Members **502** and **504** are slidably moveable on pins **510** so as to mate with member **506** when mold **500** is in a "closed" position for molding.

Core **508** and a core base plate **509** to which core **508** is attached are slidably moveable toward member **506** on pins **512** to insert core **508** within members **502**, **504** and **506** when mold **500** is in the closed position. The pin ends **514** distal from base **509** cooperatively mate with complementary apertures in member **506** (not shown) to insure the proper alignment of members **506** and **504**.

Pulley **28** is formed by first loading bearing seat insert **48'** into mold **500** when mold **500** is in the open position shown in FIG. **18**. Members **502**, **504** and **506** are then slid together and core **508** is coaxially retained within the mated mold members **502**, **504** and **506** by the base portion **509**. The pulley is then molded by introducing a hot structural foam and plastic mixture having a 40% glass fill into a material gate **516**. The mold is allowed to cool for about 3 to 6 minutes, opened, and the molded pulley ejected. Ejector pins (not shown) in the base plate **509** can be used to facilitate removal of pulley **28** from core **508**. End cap **44** can be produced with molded-in bearing seat insert **48** by a similar process.

We claim:

1. An exercise treadmill, comprising:

a frame structure including two rotatable pulleys, said pulleys being positioned substantially parallel to each other, and a pair of spaced apart longitudinal frame members for providing longitudinal structural support for said frame structure;

a motor;

a transmission operatively connecting said motor to a first of said pulleys;

an endless, moveable surface being rotated when said first pulley is rotated, and providing an exercise surface on which a user can walk or run while exercising;

a deck member for supporting the weight of a human user secured beneath at least a portion of said exercise surface; and

a control panel secured to said frame structure and operatively connected to said motor for permitting the human user to control the speed of said endless movable surface;

at least one side rail secured to said frame structure; and

a deck support structure including at least two resilient support members, wherein at least a portion of said resilient support members are composed of elastomeric material, and wherein said resilient support members are laterally spaced and interposed in a lateral plane between said frame structure and said deck member and wherein each of said resilient support members are permanently secured in said lateral plane between said deck member and said frame structure so as to prevent longitudinal movement of all of said elastomeric material in said resilient support members with respect to said deck member and wherein said resilient support members support said deck member on said frame structure so as to permit said deck member to deflect downwardly with respect to said frame in response to the impact force of the human user's feet on said exercise surface.

2. The exercise treadmill of claim **1** wherein at least two of said resilient support members are laterally spaced and secured to said frame structure proximate to one end of said deck member.

3. The exercise treadmill of claim 2 wherein each of said two resilient support members laterally spaced and secured to said frame structure proximate to said one end of said deck member are secured to said frame structure with at least one fasting member.

4. The exercise treadmill of claim 1 wherein at least two of said resilient support members are configured with a cross section having an aperture.

5. The exercise treadmill of claim 4 wherein said apertures are generally elliptical in shape.

6. The exercise treadmill of claim 4 wherein said apertures result in said resilient support members having a variable spring rate.

7. The exercise treadmill of claim 6 wherein said deck support structure additionally permits at least a limited longitudinal movement of one end of said deck member.

8. The exercise treadmill of claim 1 wherein said deck member includes a member composed substantially of wood and wherein said resilient support members abut said deck member.

9. The exercise treadmill of claim 1 wherein at least two of said resilient support members are secured to said frame structure and abut said deck member proximate to one end of said deck member and are effective to permit both said downward movement of said deck member and at least limited longitudinal movement of said one end of said deck.

10. An exercise treadmill, comprising:

frame structure including two rotatable pulleys, said pulleys being positioned substantially parallel to each other, and a pair of spaced apart longitudinal frame members for providing longitudinal structural support for said frame structure;

a motor;

a transmission operatively connecting said motor to a first of said pulleys;

an endless, moveable surface being rotated when said first pulley is rotated, and providing an exercise surface on which a user can walk or run while exercising;

a deck member for supporting the weight of a human user secured beneath at least a portion of said exercise surface; and

a control panel secured to said frame structure and operatively connected to said motor for permitting the human user to control the speed of said endless movable surface;

at least one side rail secured to said frame structure; and

a deck support structure including an array of longitudinally and laterally spaced elastomeric support members secured between said deck member and said frame structure wherein said elastomeric support members permit said deck to partially float on said frame structure so as to permit at least a portion of said deck member to move downwardly with respect to said frame structure by compressing in response to the impact force of the human user's feet on said exercise surface thereby resulting in lower impact loads on the user's feet.

11. The exercise treadmill of claim 10 wherein said elastomeric members additionally absorb substantially all the longitudinal movement of said deck member resulting from resulting from the impact of the user's feet on said deck member.

12. The exercise treadmill of claim 11 wherein at least a portion of said elastomeric support members are cylindrically shaped and are secured between said deck member and said frame structure and are effective to absorb the longitudinal movement of said deck member without additional structure secured between said frame structure and said deck member.

13. The exercise treadmill of claim 10 wherein at least a portion of said elastomeric support members are configured such as to have a variable spring rate when compressed in response to the impact force of the human user's feet.

14. The exercise treadmill of claim 13 wherein said elastomeric support members having a variable spring rate cooperate with said deck member to permit said deck to move downwardly such that the amount of incremental movement of said deck member decreases as the impact force of the user's feet on said exercise surface increases.

15. The exercise treadmill of claim 10 wherein said elastomeric support members have a uncompressed height in the range of 1.5 to 3.0 inches and have a compressed height in the range of 0.5 to 2.0 inches.

16. An exercise treadmill, comprising:

a frame structure including two rotatable pulleys, said pulleys being positioned substantially parallel to each other, and a pair of spaced apart longitudinal frame members for providing longitudinal structural support for said frame structure;

a motor;

a transmission operatively connecting said motor to a first of said pulleys;

an endless, moveable surface being rotated when said first pulley is rotated, and providing an exercise surface on which a user can walk or run while exercising;

a deck member for supporting the weight of a human user secured beneath at least a portion of said exercise surface; and

a control panel secured to said frame structure and operatively connected to said motor for permitting the human user to control the speed of said endless movable surface;

at least one side rail secured to said frame structure; and

a deck support structure including at least one set of two elastomeric support members having a variable spring constant secured to said frame structure and abutting said deck so as to both permit said deck member to float on said frame structure and to permit said deck member to move downwardly with respect to said frame structure resulting from compression of said elastomeric support members in response to the impact force of the human user's feet on said exercise surface thereby resulting in lower impact loads on the human user's feet.

17. The exercise treadmill of claim 16 wherein said set of elastomeric support members are configured with a cross section having an aperture wherein said variable spring rate substantially results from said apertures.

18. The exercise treadmill of claim 17 wherein said set of elastomeric support members cooperate with said deck member to permit said deck to move downwardly such that the amount of incremental deflection of said deck member decreases as the impact force of the human user's feet on said exercise surface increases.

19. The exercise treadmill of claim 18 wherein said deck member includes a member composed substantially of wood and wherein said elastomeric support members abut said deck member.

20. The exercise treadmill of claim 19 wherein said elastomeric members additionally absorb substantially all the longitudinal movement of said deck member resulting from the impact of the user's feet on said deck member.

21. An exercise treadmill, comprising:

a frame structure including a pair of spaced apart longitudinal frame members and at least two longitudinally spaced apart cross members correcting said longitudinal frame members, said frame structure having a first and second ends located at opposite ends of said longitudinal frame members;

a first belt pulley rotatably secured at the first end of said frame structure;

a second belt pulley rotatably secured at the second end of said frame structure and positioned substantially parallel to said first belt pulley;

an endless belt extending over said belt pulleys, thereby providing a moveable exercise surface;

a motor;

a transmission operatively connecting said motor to said first belt pulley;

a deck member having a first end and a second end and being located beneath at least a portion of said exercise surface; and

a first compressible support member substantially comprised of an elastomeric material secured to said frame structure and located underneath said deck member, wherein said first compressible support member supports at least a portion of said deck member on said frame structure and wherein said first compressible support member is sufficiently compressible to permit said portion of said deck member to move downwardly with respect to said frame in response to impact force of a human user's feet on said exercise surface, and wherein said compressible support member has a variable spring rate.

22. The exercise treadmill of claim 21, wherein said compressible support member is secured to a cross member located beneath said deck member.

23. The exercise treadmill of claim 21, wherein said compressible support member is secured to a longitudinal frame member located beneath said deck member.

24. The exercise treadmill of claim 21, further comprising a second compressible support member secured to said frame structure underneath said deck member, said second compressible support member being spaced laterally from said first compressible support member.

25. The exercise treadmill of claim 24 wherein said first and second compressible support members are secured to said frame structure proximate to said first end of said deck member.

26. The exercise treadmill of claim 25, wherein said first and second compressible support members abut said deck member and permit a limited longitudinal movement of said first end of said deck member.

27. The exercise treadmill of claim 24, additionally including a third and a fourth compressible support member longitudinally spaced apart from said first and second compressible support members.

28. The exercise treadmill of claim 21, wherein each said compressible support member comprises an elastomeric material configured with a cross section having an aperture.

29. The exercise treadmill of claim 28, wherein each said aperture extends horizontally through said elastomeric material.

30. The exercise treadmill of claim 28, wherein said compressible support member is secured to said frame structure with at least one fastening member.

31. The exercise treadmill of claim 22, wherein each said compressible support member comprises an elastomeric material configured with a cross section having an aperture.

32. The exercise treadmill of claim 23, wherein each said compressible support member comprises an elastomeric material configured with a cross section having an aperture.

33. The exercise treadmill of claim 24, wherein each said compressible support member comprises an elastomeric material configured with a cross section having an aperture.

34. The exercise treadmill of claim 25, wherein said deck member is made from wood and is at least ⅝ths of an inch in thickness.

35. The exercise treadmill of claim 26, wherein each said compressible support member comprises an elastomeric material configured with a cross section having an aperture.

36. The exercise treadmill of claim 27, wherein each said compressible support member comprises an elastomeric material configured with a cross section having an aperture.

37. The exercise treadmill of claim 21, wherein said variable spring rate results in approximate downward movement of said portion of said deck member according to a first relation $y=400x$ for a first range of downward movement and a second relation $y=640x-96$ for a second range of downward movement, where x represents the amount of downward movement in inches and y represents the impact force in pounds.

38. The exercise treadmill of claim 21, wherein said compressible support member has a uncompressed height of at least 1.5 inches and has a minimum compressed height of at least 0.5 inches.

39. An exercise treadmill, comprising:

a frame structure;

at least one side rail secured to said frame structure;

an endless belt providing a moveable exercise surface;

a motor supported by said frame and operatively connected to said endless belt;

a deck member; and

a first compressible support member disposed in contact with said frame and said deck member to resiliently support said deck member in relation to said frame structure, said first compressible support member permitting a portion of said deck member to move relative to said frame in response to an impact force on said deck and said first compressible support member having a variable spring constant.

40. The exercise treadmill of claim 15, further comprising: a first belt pulley and a second belt pulley, said first and second belt pulleys being rotatably attached to said frame structure, said motor being connected in torque transmitting relation with said first belt pulley, said endless belt extending over said first and second belt pulleys to provide a moveable exercise surface, whereby said first compressible support member is sufficiently resilient to permit a portion of said deck member to move downwardly with respect to said frame structure in response to said impact force as a result of a human user's feet on said exercise surface.

41. The exercise treadmill of claim 40, further comprising: two or more of said compressible support members.

42. An exercise treadmill, comprising:

a frame structure including a pair of spaced apart longitudinal frame members and at least two longitudinally spaced apart cross members connecting said longitudinal frame members, said frame structure having first and second ends located at opposite ends of said longitudinal frame members;

a first belt pulley rotatably secured to the first end of said frame structure;

a second belt pulley rotatably secured to the second end of said frame structure and positioned substantially parallel to said first belt pulley;

an endless belt extending over said belt pulleys, thereby providing a moveable exercise surface;

a motor;

a transmission operatively connecting said motor to said first belt pulley;

a deck member located beneath at least a portion of said exercise surface;

a first compressible support member substantially comprised of an elastomeric material secured to said frame structure and located underneath said deck member, wherein said first compressible support member supports at least a portion of said deck member on said frame structure, wherein said first compressible support member is sufficiently compressible to permit said portion of said deck member to move downwardly with respect to said frame in response to impact force of a human user's feet on said exercise surface, and said compressible support member has a variable spring rate; and

an impact sensing mechanism operably contacting said deck.

43. The exercise treadmill of claim **42**, wherein said impact sensing mechanism comprises a deflection arm attached to said frame and resiliently biased against a lower surface of said deck.

44. The exercise treadmill of claim **43**, wherein said impact sensing mechanism further comprises a magnet attached to said deflection arm and located at a first position relative to said frame.

45. The exercise treadmill of claim **44**, wherein magnet moves to a second position relative to said frame when said deck member under said exercise surface is impacted.

46. The exercise treadmill of claim **45**, wherein said impact sensing mechanism further comprises a sensor rigidly secured to said frame adjacent said magnet, wherein said sensor detects a change in magnetic flux when said magnet moves between said first and said second positions.

47. The exercise treadmill of claim **46**, further comprising a microprocessor operably connected to said sensor, wherein said microprocessor generates a display of impact information from said change in magnetic flux.

48. An exercise treadmill, comprising:

a frame structure including a pair of spaced apart longitudinal frame members and at least two longitudinally spaced apart cross members connecting said longitudinal frame members, said frame structure having first and second ends located at opposite ends of said longitudinal frame members;

a first belt pulley rotatably secured to the first end of said frame structure;

a second belt pulley rotatably secured to the second end of said frame structure and positioned substantially parallel to said first belt pulley;

an endless belt extending over said belt pulleys, thereby providing a moveable exercise surface;

a motor;

a transmission operatively connecting said motor to said first belt pulley;

a belt position sensing mechanism operably contacting said endless belt;

a deck member located beneath at least a portion of said exercise surface; and

a first compressible support member substantially comprised of an elastomeric material secured to said frame structure and located underneath said deck member, wherein said first compressible support member supports at least a portion of said deck member on said frame structure, wherein said first compressible support member is sufficiently compressible to permit said portion of said deck member to move downwardly with respect to said frame in response to impact force of a human user's feet on said exercise surface, and said compressible support member has a variable spring rate.

49. The exercise treadmill of claim **48**, wherein said belt position sensing mechanism comprises a deflection arm attached to said frame and resiliently biased against an edge of said endless belt.

50. The exercise treadmill of claim **49**, wherein said belt position sensing mechanism further comprises a magnet attached to said deflection arm at a first position relative to said frame.

51. The exercise treadmill of claim **50**, wherein magnet moves to a second position relative to said frame when said endless belt moves laterally relative to said frame.

52. The exercise treadmill of claim **51**, wherein said belt position sensing mechanism further comprises a sensor rigidly secured to said frame adjacent said magnet, wherein said sensor detects a change in magnetic flux when said magnet moves between said first and said second positions.

53. The exercise treadmill of claim **52**, further comprising a microprocessor operably connected to said sensor and a pulley pivoting system operably connected to one of said pulleys and to said microprocessor, wherein said microprocessor causes said pulley pivoting system to maintain said endless belt in a desired position on said pulleys based on said change in magnetic flux.

54. An exercise treadmill, comprising:

a frame structure including two rotatable pulleys, said pulleys being positioned substantially parallel to each other, and a pair of spaced apart longitudinal frame members for providing longitudinal structural support for said frame structure; a rotational means including a motor for rotating one of said pulleys;

an endless, moveable surface being rotated when one of said pulleys is rotated, and providing an exercise surface on which a user can walk or run while exercising;

a deck member secured beneath at least a portion of said exercise surface;

a microprocessor included in said treadmill and operatively connected to said motor, and programmed to allow a user to select the speed of said endless moveable surface;

a plurality of laterally spaced resilient support members interposed between said frame structure and said deck member;

said resilient support members being mounted on stationary portions of said frame structure so as to prevent longitudinal movement of said resilient support members;

said resilient support members supporting said deck member on said frame structure so as to permit at least a portion of said deck member to move downwardly with respect to said frame in response to the impact force of the user's feet on said exercise surface;

at least a portion of said resilient support members being composed of an elastomeric material and abutting said deck member; and

said resilient support members having a variable spring rate, whereby said resilient support member compresses at a variable rate in response to the impact force of the user's feet on said exercise surface.

55. The exercise treadmill of claim 54 wherein said resilient support members additionally serve to limit said downward deflection.

56. An exercise treadmill, comprising:

a frame structure including two rotatable pulleys, said pulleys being positioned substantially parallel to each other, and a pair of spaced apart longitudinal frame members for providing longitudinal structural support for said frame structure;

at least one side rail secured to said frame structure;

a rotational means including a motor for rotating one of said pulleys;

an endless, moveable surface being rotated when one of said pulleys is rotated, and providing an exercise surface on which a user can walk or run while exercising;

a deck member secured beneath at least a portion of said exercise surface;

a plurality of laterally spaced resilient support members interposed between said frame structure and said deck member;

said resilient support members being mounted on stationary portions of said frame structure so as to prevent longitudinal movement of said resilient support members;

said resilient support members supporting said deck member on said frame structure so as to permit at least a portion of said deck member to move downwardly with respect to said frame in response to the impact force of the user's feet on said exercise surface;

at least a portion of said resilient support members being composed of an elastomeric material and abuting said deck member; and

said resilient support members having a variable spring rate, whereby said resilient support member compresses at a variable rate in response to the impact force of the user's feet on said exercise surface.

57. The exercise treadmill of claim 56 wherein said resilient support members additionally serve to limit said downward deflection.

58. A treadmill comprising:

a frame structure including two rotatable pulleys, said pulleys being positioned substantially parallel to each other;

at least one side rail secured to said frame structure;

a motor for rotating one of said pulleys;

an endless, moveable surface being rotated when one of said pulleys is rotated, and providing an exercise surface on which a user can walk or run while exercising;

a plurality of resilient support members interposed between said frame structure and said deck member;

said resilient support members supporting said deck member on said frame structure so as to permit at least a portion of said deck member to move downwardly with respect to said frame in response to the impact force of a user's feet on said exercise surface;

at least a portion of said resilient support members being composed of an elastomeric material; and

said resilient support members having a variable spring rate, whereby said resilient support members compress at a variable rate in response to the impact force of the user's feet on said exercise surface.

59. The exercise treadmill of claim 58 wherein said resilient support members additionally serve to limit said downward deflection.

60. A treadmill comprising:

a frame structure including two rotatable pulleys, said pulleys being positioned substantially parallel to each other;

at least one side rail secured to said frame structure;

a motor for rotating one of said pulleys;

an endless, moveable surface being rotated when one of said pulleys is rotated, and providing an exercise surface on which a user can walk or run while exercising;

a plurality of resilient elastomers interposed between said frame structure and said deck member;

said resilient elastomers supporting said deck member on said frame structure so as to permit at least a portion of said deck member to move downwardly with respect to said frame in response to the impact force of a user's feet on said exercise surface; and

said resilient elastomers having a variable spring rate, whereby said resilient elastomers compress at a variable rate in response to the impact force of the users feet on said exercise surface.

61. The exercise treadmill of claim 60 wherein said resilient elastomers additionally serve to limit said downward deflection.

62. An exercise treadmill structures comprising:

a frame structure having a plurality of structural elements including a pair of spaced apart longitudinal frame members for providing structural support for said frame structure;

a first belt pulley rotatably secured to a first end of said frame structure;

a second belt pulley rotatably secured to a second end of said frame structure;

an endless belt extending over said belt pulleys providing a moveable exercise surface on which a human user can walk or run while exercising;

a motor;

a transmission operatively connecting said motor to said first belt pulley;

a deck member composed substantially of wood having a first end and a second end and extending parallel to said longitudinal members for supporting the weight of a human user secured beneath at least a portion of said exercise surface;

a first non-inflatable, compressible support member substantially comprised of an elastomeric material secured to said frame structure in a lateral plane beneath said deck member with respect to said frame structure and permanently secured to said frame structure so as to prevent longitudinal movement of at least a portion of said first compressible support member with respect to said deck member and wherein said elastomeric material in said first compressible support members serves to support at least a portion of a first portion of said deck member with respect to said frame structure and wherein said elastomeric material is additionally sufficiently compressible to permit said first portion of deck member to move downwardly with respect to said frame structure in response to the impact force of the human user's feet on said exercise surface thereby lowering impact loads on the user's feet; and

a second non-inflatable, compressible support member substantially comprised of said elastomeric material secured to said frame structure spaced laterally apart from said first compressible support member in said

lateral plane and permanently secured to said frame structure so as to prevent longitudinal movement of at least a portion of said second compressible support member and wherein said elastomeric material in said second compressible support member serves to support at least a portion of a second portion of said deck member with respect to said frame structure and wherein said elastomeric material is additionally sufficiently compressible to permit said second portion of deck member to move downwardly with respect to said frame in response to the impact force of the human user's feet on said exercise surface thereby lowering impact loads on the user's feet.

63. The exercise treadmill of claim **62** wherein said first and second support members are secured to said frame structure proximate to said first end of said deck member and permit said first end of said deck member to move downwardly in response to the impact of the user's feet.

64. The exercise treadmill of claim **63** wherein said compressible support members are secured to said frame structure with at least one fastening member.

65. The exercise treadmill of claim **62** wherein said elastomeric material of said compressible support members is configured with a cross section having an aperture.

66. The exercise treadmill of claim **65** wherein apertures results in a variable rate of said downward movement of said portions of deck member according to a first relation y=400x for a first range of downward movement and a second relation y=640x−96 for a second range of downward movement where x represents the amount of downward movement in inches and y represents the impact force in pounds.

67. The exercise treadmill of claim **65** additionally including a third and a fourth non-inflatable, compressible support member longitudinally spaced from said first and second compressible support members respectively wherein said third and fourth support members are configured with a cross section having an aperture.

68. The exercise treadmill of claim **65** wherein said apertures result in said resilient support members having a variable rate of compression.

69. The exercise treadmill of claim **63** wherein a portion of said elastomeric material of said first and second support members abut said deck member and additionally permit a limited longitudinal movement of said first end of said deck member.

70. An exercise treadmill structure, comprising:

a frame structure having a plurality of structural elements including and a pair of spaced apart longitudinal frame members for providing structural support for said frame structure;

a first belt pulley rotatably secured to a first end of said frame structure,

a second belt pulley rotatably secured to a second end of said frame structure

an endless belt extending over said belt pulleys providing a moveable exercise surface on which a user can walk or run while exercising;

a motor;

a transmission operatively connecting said motor to said first belt pulley;

a deck member composed substantially of wood having a first end and a second end and extending parallel to said longitudinal members for supporting the weight of a human user secured beneath at least a portion of said exercise surface;

a first non-inflatable, compressible support member substantially comprised of an elastomeric material secured to said frame structure in a lateral plane beneath said deck member effective to support at least a first portion of said deck member with respect to said frame structure and wherein said elastomeric material in said first compressible support member is configure with an aperture extending in a general horizontal direction through said first compressible support member and wherein said elastomeric material in said first compressible support member supports said first portion of said deck member and wherein said elastomeric material is sufficiently compressible to permit said first portion of deck member to move downwardly, with a variable rate of downward movement, with respect to said frame in response to the impact force of the human user's feet on said exercise surface thereby lowering impact loads on the user's feet; and

a second non-inflatable, compressible support member substantially comprised of said elastomeric material secured to said frame structure spaced laterally apart from said first compressible support member in said lateral plane effective to support at least a second portion of said deck member wherein said elastomeric material in said first compressible support member is configure with an aperture extending in a general horizontal direction through said first compressible support member and wherein said elastomeric material in said second compressible elastomeric support members supports said second portion of said deck member and wherein said elastomeric material is sufficiently compressible to permit said second portion of said deck member to move downwardly, with a variable rate of downward movement, with respect to said frame in response to the impact force of the human user's feet on said exercise surface thereby lowering impact loads on the user's feet.

71. The exercise treadmill of claim **70** wherein said deck member is at least ⅝ ths of an inch in thickness.

72. The exercise treadmill of claim **71** wherein said variable rates of downward movement result in the approximate downward movement of said portions of said deck member according to a first relation y=400x for a first range of downward movement and a second relation y=640x−96 for a second range of downward movement where x represents the amount of downward movement in inches and y represents the impact force in pounds.

73. The exercise treadmill of claim **70** wherein said compressible support members have a uncompressed height of at least 1.5 inches and have a compressed height of at least 0.5 inches.

74. The exercise treadmill of claim **70** wherein said elastomeric material has a hardness in the range of shore 30 A to 55 A.

75. An exercise treadmill structure, comprising:

a frame structure having a plurality of structural elements including a pair of spaced apart longitudinal frame members for providing structural support for said frame structure;

a first belt pulley rotatably secured to a first end of said frame structure;

a second belt pulley rotatably secured to a second end of said frame structure;

an endless belt extending over said belt pulleys providing a moveable exercise surface on which a human user can walk or run while exercising;

a motor;

a transmission operatively connecting said motor to said first belt pulley;

a deck member composed substantially of wood having a first end and a second end and extending parallel to said longitudinal members for supporting the weight of a human user secured beneath at least a portion of said exercise surface; and

an array of longitudinally and laterally spaced compressible support members substantially comprised of an elastomeric material secured to said frame structure in a lateral plane beneath said deck member wherein said elastomeric material in said compressible support members serves to support at least a first portion of a said deck member with respect to said frame structure and wherein said elastomeric material is additionally sufficiently compressible to permit at least a portion of said first portion of deck member to move downwardly with respect to said frame in response to the impact force of the human user's feet on said exercise surface thereby lowering impact loads on the user's feet.

76. The exercise treadmill of claim **75** wherein at least a portion of said compressible support members are configured so as to offer a degree of resistance to said downward movement of said portion of said deck member that increases in proportion to the extent of downward travel of said portion of said deck member.

77. The exercise treadmill of claim **76** wherein said resistance results in the approximate downward movement of said portion of said deck member according to a first relation y=400x for a first range of downward movement and a second relation y=640x−96 for a second range of downward movement where x represents the amount of downward movement in inches and y represents the impact force in pounds.

78. The exercise treadmill of claim **76** wherein at least a portion of said compressible support members are configured with an aperture resulting in said variable resistance.

79. The exercise treadmill of claim **75** wherein at least a portion of said compressible support members have a generally cylindrical configuration.

80. The exercise treadmill of claim **75** wherein said portion of said compressible support members are configured with a vertical aperture substantially aligned along the center line of said portion of said compressible support members.

81. The exercise treadmill of claim **80** wherein said portion of said compressible support members include a securing member extending upwardly from said frame structure through said apertures effective to secure said portion of said compressible support members with respect to said frame structure.

82. The exercise treadmill of claim **75** wherein a first two of said portion of said compressible support members have a generally cylindrical configuration are located proximate to a first end of said deck member and a second two of said portion of said compressible support members have a generally cylindrical configuration are located proximate to a second end of said deck member.

83. The exercise treadmill of claim **75** wherein a securing member extends upward from said frame structure through at least a portion of said compressible support members effective to prevent substantial lateral and longitudinal movement of said deck member with respect to said frame structure.

84. The exercise treadmill of claim **75** wherein said elastomeric material abuts said deck member and has a hardness in the range of shore 30 A to 55 A in at least a portion of said compressible support members.

85. An exercise treadmill structure, comprising:

a frame structure including a pair of spaced apart longitudinal frame members for providing longitudinal structural support for said frame structure and at least two longitudinally spaced apart cross members for providing lateral structural support for said frame structure;

a first belt pulley rotatably secured to a first end of said frame structure;

a second belt pulley rotatably secured to a second end of said frame structure;

an endless belt extending over said belt pulleys providing a moveable exercise surface on which a human user can walk or run while exercising;

a motor;

a transmission operatively connecting said motor to said first belt pulley;

a deck member composed substantially of wood having a first end and a second end and extending parallel to said longitudinal members for supporting the weight of a human user secured beneath at least a portion of said exercise surface; and

a compressible elastomeric support member, configured with a horizontal aperture, secured to one of said cross members and abutting said deck member wherein said compressible elastomeric support member serves to support at least a first portion of a said deck member with respect to said frame'structure and wherein said compressible elastomeric support member is additionally sufficiently compressible to permit at least a portion of said first portion of deck member to move downwardly with respect to said frame in response to the impact force of the human user's feet on said exercise surface thereby lowering impact loads on the user's feet.

86. The exercise treadmill of claim **85** wherein said aperture in said compressible elastomeric support member is effective to cause a variable rate of said downward movement of said deck member.

87. The exercise treadmill of claim **86** wherein said compressible elastomeric support member abuts said deck member and has a hardness in the range of shore 30 A to shore 55 A.

* * * * *