EXHIBIT 1

UNITED STATES DISTRICT COURT
DISTRICT OF CONNECTICUT

CHAPCO, INC. AND SAMSARA FITNESS, LLC, Plaintiffs, v. WOODWAY USA, INC., Defendant.	Civil Action No. 3-15-CV-1665(JCH) May 1, 2017

DECLARATION OF ROBERT GIACHETTI

I, Robert Giachetti, declare under penalty of perjury under the laws of the United States of America that the following is true and correct:

1. I have personal knowledge of the facts set forth herein.

2. I have been engaged by Chapco, Inc. ("Chapco") and Samsara Fitness, LLC ("Samsara"), through counsel, as an expert to independently review the asserted claims of the and determine whether each asserted claim is valid.

3. I understand that Woodway has asserted claims 11-16 of the United States Patent No. 8,986,169 (the "'169 patent") and claims 1, 4-6, 10-14, 18-20, and 25 of United States Patent No. 9,039,580 (the "'580 Patent") (collectively "Asserted Claims" or "Patents-in-Suit"). I understand that the Patents-in-Suit were issued by the United States Patent and Trademark Office ("USPTO") and as such there is a presumption of validity.

4. I have read the Court's Claim Construction Ruling (Dkt. No. 76), and I have applied the Court's constructions for my analysis and opinion.

5. I am employed by Exponent, Inc. as a Managing Engineer. I joined Exponent in June 2008 after working in the Biomechanics Laboratory at University of Wisconsin-Madison

EX2009
Woodway USA, Inc.
IPR2023-00849

and University of Illinois at Chicago where I focused my research on the forces within the knee joint and coordination of lower limb musculature as it relates to foot forces and balance during walking, standing, running, etc.

6. I am a Licensed Professional Engineer in Illinois and Oklahoma, with over 10 years of experience in mechanical engineering. My experience in machinery and mechanisms spans numerous industries; I have worked directly designing mechanical systems and machinery and have consulted on the operation of machinery in various fields including rail, exercise equipment, and industrial machinery.

7. I am an active member of the ASTM International Committees F08 and F15 that oversee sports equipment and consumer products. I have been recognized as an expert in mechanical power transmission equipment and serve on the American Society of Mechanical Engineers (ASME) Power Transmission and Gearing Committee.

8. As part of my education and work experience, I am aware that several bodies publish voluntary and mandatory standards regarding treadmills, including those set forth below:

a. The Australian Competition & Consumer Commission's mandatory safety standard (supplier guide) from 2009[1] regarding treadmills defines a treadmill as "an exercise device that consists of an endless conveyor belt that is rotated either manually or by a motor and on which a person can walk or jog in one place."

b. The 2005 International Standards Organization ("ISO") standard regarding treadmills, ISO 20957-6, defines a treadmill as "training equipment with a unidirectional moving surface on which a walking or running activity can take place, where the feet are free to leave the moving surface." ISO 20957-6 also specifies that treadmills shall have handrails for safety, and shall be equipped

[1] "Treadmills: Supplier Guide" © 2010. Trade Practices (Consumer Product Safety Standard) (Treadmills) Regulations 2009.

with foot platforms. ISO 20957-6 states that side handrails may be attached to the foot platforms. Finally, ISO 20957-6 suggests using guards for transmission elements and rotating parts.

c. ASTM publishes several standards relating to fitness equipment and treadmills, specifically ASTM F2115-05, which states that a treadmill is a "motorized stationary exercise device that allows the user to walk, jog, or run by means of traversing a continuous moving surface." This standard states that treadmills shall be equipped with foot rails to facilitate user mounting and unmounting. It also states the design of rotating parts shall avoid shear, pinch or catch points by guarding, shielding, spacing, or other means. ASTM F2115-05 states that all treadmills shall be equipped with a handrail for user support. The side view illustration of a treadmill in ASTM F2115-05 (Fig.4 of the standard) reproduced below shows a treadmill with a handrail, a front roller, a rear roller and a running belt disposed about the front and rear rollers:

Key
1 Display
2 Front handlebar
3 Side handrail
4 Non slip surface
5 Foot platform
6 Rear roller guard (see Figure 2)
7 Running deck
8 Running surface (belt)
9 Front housing
10 Emergency stop
11 Rear roller (see Figure 2)

l length of running surface (belt)
b width of running surface (belt)

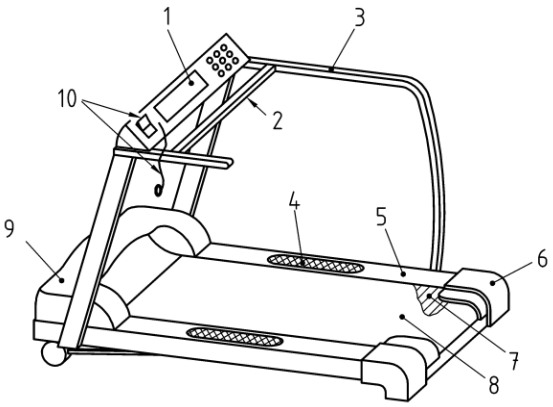

9.

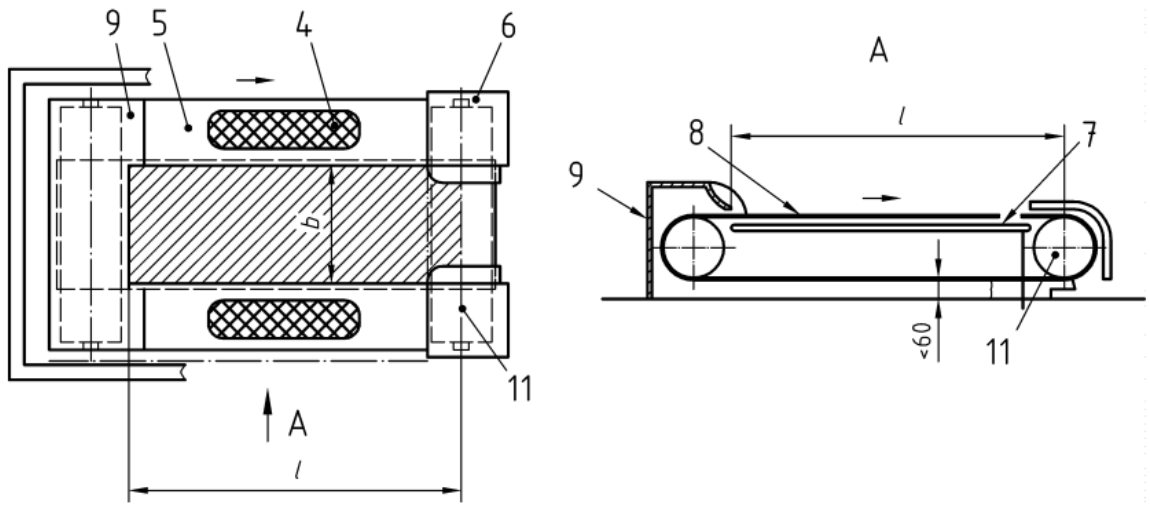

10. The Patents-in-Suit relate to exercise devices constructed from old and well known mechanical power transmission components, mechanical hardware, and materials that are commonly available.

11. In my opinion, a person having ordinary skill in the art ("PHOSITA") for the purposes of the Patents-in-Suit is a mechanical engineer with at least one year of machine design experience related to power transmission equipment and a demonstrated understanding of the biomechanics of exercise, including knowledge in the field of anthropometry (i.e. the study of human proportion).

12. I am aware that Woodway USA, Inc. engaged Dr. Kim Blair, and I understand that Dr. Blair has opined that for the purposes of the Patents-in-Suit that a person who has either of two qualifications: (a) graduated with an undergraduate degree in Mechanical Engineering; or (b) at least two years of experience in the "treadmill industry" including a knowledge of "design, construction, testing, and operation of manual treadmills qualifies as a PHOSITA.

13. As part of my engagement, I assessed certain prior art, as that term is defined and understood pursuant to 35 U.S.C. § 103, some of which is identified below:

United States Patent No. 3,637,206 ("Chickering")

14. United States Patent No. 3,637,206 to Chickering, entitled Endless Belt Exerciser With Accelerating and Decelerating Tread Surfaces, issued on January 25, 1972. It is prior art to the Patents-in-Suit. A true copy of Chickering, highlighted for ease of reference, is attached hereto as Exhibit A.

15. Chickering discloses an exercise device to "accurately simulate the acts of walking, jogging, and running." Exh. A, Col. 1, ll. 1-7.

16. Chickering includes Figure 1, shown below:

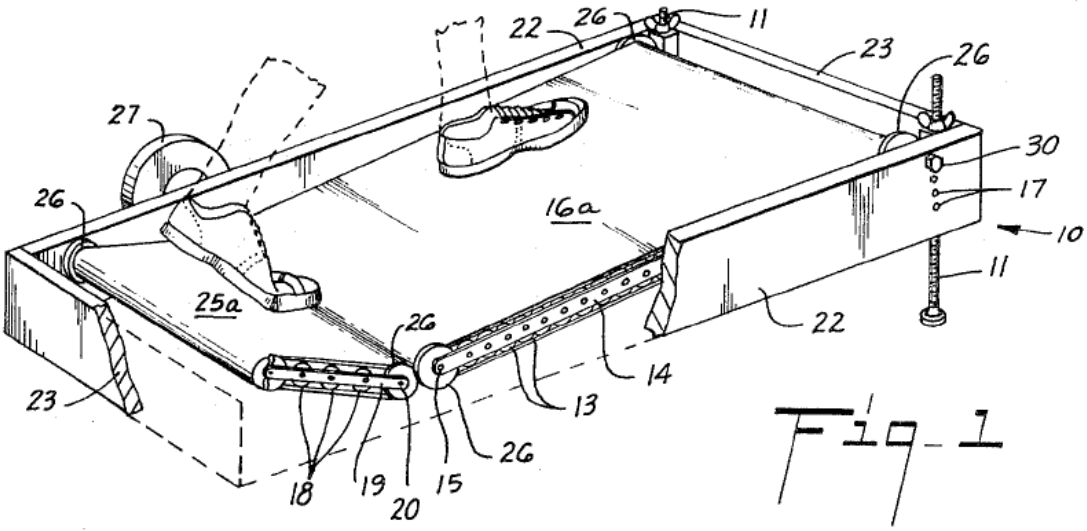

17. Chickering discloses a "new type" of treadmill with a running surface with a concave profile comprised of a belt (16, 28), supported by a plurality of rollers (13, 18). Exh. A, Col. 1, ll. 1-7; Col. 2, ll. 14-21; Figs. 1, 3.

18. Chickering also includes Figures 2 and 3, below:

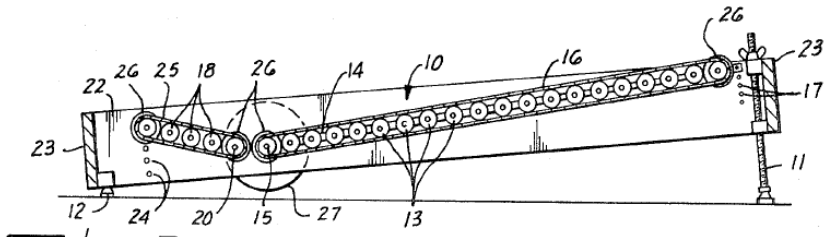

Fig. 2

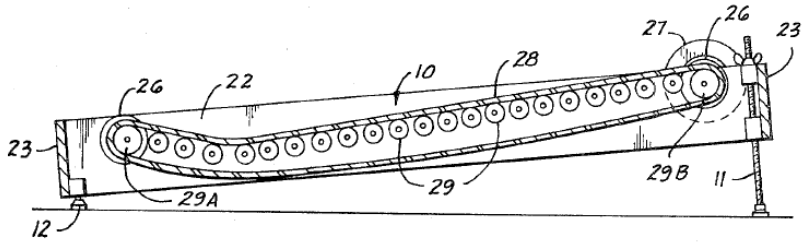

Fig. 3

19. Figures 2 and 3 disclose a treadmill with a running surface profile that corresponds to the concave surface of the plurality of rollers beneath it. Exh. A, Figs. 2, 3.

20. Chickering discloses a front shaft and a rear shaft (29a, b) coupled to the frame. Exh. A, Fig. 3.

21. The relative incline of the roller surfaces allows the user to "push off against the rear surface" at the end of each step. Exh. A, Col., 2, ll. 64-67.

22. The Chickering device comprises a "base" (10) that constitutes a frame element, that provides structure and support for the treadmill. The frame includes longitudinal side members (14) that are mounted to the frame (10), a plurality of anti-friction rollers with their ends journaled in the side members/arms (14) and supporting the running belt, which is partially disposed on the front and rear shafts (26). Exh. A, Col. 1, ll. 72 – Col. 2, ll. 22; Fig. 1.

23. Chickering also teaches that it was already well known in the art that roller-type belt supports on an inclined base have so little friction that an additional device or mechanism is

required because a person exercising on that "type of treadmill is likely to lose his balance because the frictionless surface offers no resistance to the movement of his feet… ." Exh. A, Col. 1, ll. 26-34.

24. The plurality of rollers (13) are rotatably coupled to the bearing rail (14) that is separate from the frame (10). Exh. A, Col. 1, ll. 14-35; Claim 4.

25. Although the Chickering device was usable without external supports, such as handles or railings, Chickering teaches that such supports may be provided without departing from the spirit of the invention. Exh. A, Col. 3, ll. 38-41. Although, because handrails and guards are required by the treadmill standards, as noted above, such elements would not need to be declared in the disclosure.

United States Patent No. 5,709,632 ("Socwell")

26. United States Patent No. 5,709,632 to Socwell, entitled Curved Deck Treadmill, issued on January 20, 1998. It is prior art to the Patents-in-Suit. (A true copy of Socwell, highlighted for ease of reference, is attached hereto as Exhibit B.)

27. Socwell includes Figure 2, below:

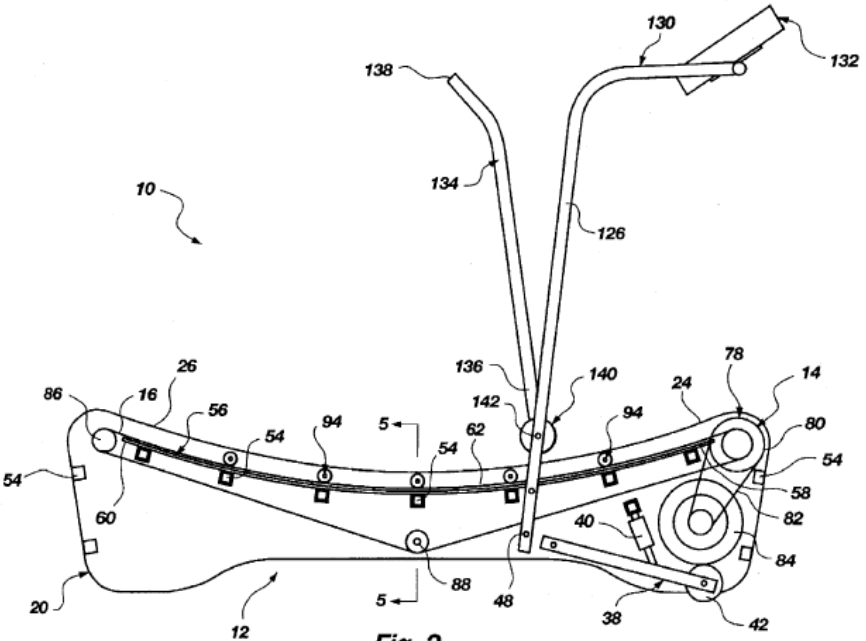

Fig. 2

28. According to the Brief Summary and Objects of the Invention, the object of Socwell was to provide (i) a curved deck treadmill which substantially prevents the user from falling off the back; (ii) a curved deck treadmill which is capable of providing meaningful walking, jogging, or running control in relation to the physiology of the user; (iii) a curved deck treadmill which provides a continuous, smooth exercising motion. Exh. B, Col. 1, ll. 28-35, 39-51, 57-59.

29. Consistent with those objectives, Socwell discloses a manual curved deck treadmill on a substantially flat surface that includes a support frame that provides structure and support for the treadmill with a first side and a second side; a front shaft assembly supported by the frame (12) that includes a front shaft (78) and a rear shaft (86) coupled to the frame (exh. B, Col. 4, ll. 61-64; Col. 5, ll. 4-12); a bearing rail (94) with a plurality of bearings (98 [roller], 96 [mounting bracket]) which provides a means for retaining the endless running belt (16) in a curved configuration at least partially around the front and rear shafts. Exh. B, Col. 9, l. 44-Col.

10, l. 4.

30. The frame (12) is disclosed as a "support frame" that could be adapted with additional reinforcement members. Exh. B, Col. 8, ll. 50-55.

31. Socwell discloses a display, to enable the user to monitor a variety of feedback (elapsed time, speed, distance, pulse rate). Exh. B, Col. 11, ll. 60-65.

32. Socwell also discloses various handrail configurations. Exh. B, Col. 12, ll. 39-59.

33. In describing the Background of the Art, Socwell discusses the rotation of free moving rollers rotatably engaging the belt. In particular, Socwell notes that "if the rollers supportably disposed in relation to the endless belt are so easily moveable, the user may potentially lose his equilibrium or balance and fall from the exercise treadmill resulting in possible injuries." Exh. B, Col., 1, ll. 23-32.

34. To address the safety issue Socwell claims that the running surface is selectively movable; "selectorized," is a term common to fitness equipment and fitness equipment standards indicating discrete and limited movement. Exh. B, claims 1 and 14.

United States Patent No. 5,538,489 ("Magid")

35. United States Patent No. 5,538,489 to Magid, entitled Walker Apparatus with Left and Right Foot Belts, issued on July 23, 1996. It is prior art to the Patents-in-Suit. (A true copy of Magid, highlighted for ease of reference, is attached hereto as Exhibit C.)

36. Magid teaches a non-motorized treadmill comprised of a continuous belt (4, 4') disposed around a front (41) and rear shaft (42). The front and rear shafts are rotatably joined directly or indirectly to longitudinal members attached to the frame/base. Exh. C, Col. 2, ll. 1-16; Col. 6, ll. 53-64; claim 1; Fig. 8.

37. Magid discloses a "functional support frame, said base having front left and right

EX2009
Woodway USA, Inc.
IPR2023-00849

sides, a pair of spaced front brackets disposed adjacent to said front left and right sides, a first shaft extending from said front left side to said front right side, said first shaft having two ends fixed respectively at said front brackets, rear left and right sides…and a second shaft extending from said rear left side to said rear right side." Exh. C, claim 1. That claimed frame provides structure and support for the treadmill.

38. Magid includes Figure 8, which shows the rollers/bearings, continuous belt (4, 4') disposed around a front (41) and rear shaft (42), and the bearing rail (24) separate from the frame (11):

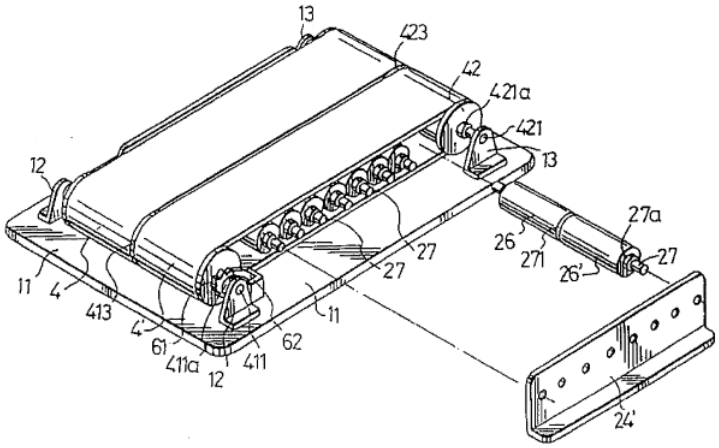

FIG. 8

39. Magid discloses a "unidirectional control" mechanism designed to "permit only unidirectional movement of the left and right foot belts." This mechanism "includes a pair of ratchet gears attached to outer ends of the front rollers, thereby preventing bidirectional movement of the foot belts." Exh. C, Col. 4, ll. 47-60.

United States Patent No. 1,211,765 ("Schmidt")

40. United States Patent No. 1,211,765 to Schmidt, entitled Health Exerciser, issued on January 9, 1917. It is prior art to the Patents-in-Suit. A true copy of Schmidt, highlighted for

ease of reference, is attached hereto as Exhibit D.

41. Schmidt includes Figures 1 and 2 below:

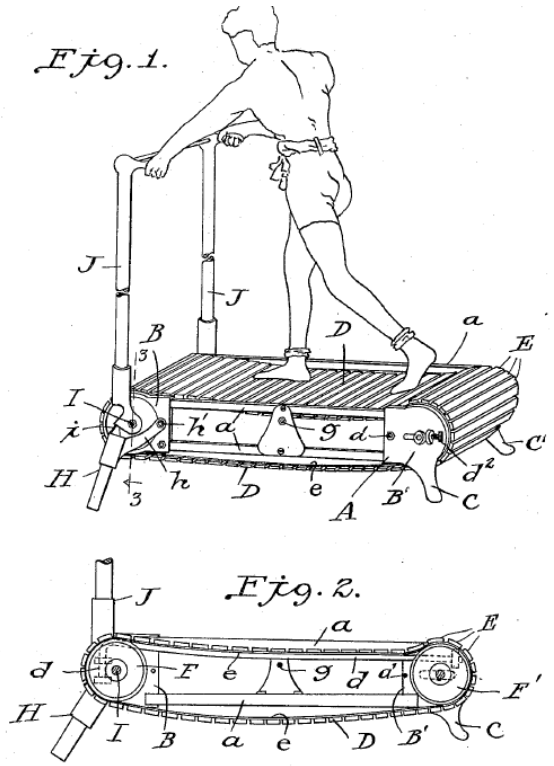

42. As shown in those Figures, Schmidt teaches a frame to provide structure and support for the treadmill (part A) with longitudinal members and a flexible running belt with treads and a curved surface (part D) disposed about front and rear shafts that are rotatably joined (coupled) to the frame. The longitudinal members in Schmidt are intentionally flexible, to reduce shock to the legs and underlying tissues. Exh. D, p. 1, Col. 2, ll. 60-63, 75-76; p. 2, Col. 1, ll. 13-37; p. 3, Col. 1, ll. 27-35; Figs. 1, 2.

43. Schmidt also discloses that the curved running surface between the front and rear shafts is for ease and efficiency of running. The curved profile of the claimed running surface allows the user to push off the rear of the treadmill without fear of sliding off – a claimed novelty that Schmidt describes as having considerable merit. Ex. D, p. 2, Col. 2, ll. 99-117.

44. Schmidt teaches that the curvature is patterned after the path of the foot relative to

the hip, which negates the nature of the body to bob up and down while running. Ex. D, p. 3, Col. 1, ll. 1-6.

45. Schmidt also discloses curved bearing rails (d), that are separate from the frame, to provide a profile for the running belt. Exh. D, p. 2, Col. 1, l. 58-Col. 2, l. 71; p. 3, Col. 1, ll. 22-33. The curved running surface's profile is maintained by the weight of the belt, gravity and intentional slack in the running belt. Ex. D, Figs. 2, 3.

46. The rails in Schmidt (d) provides a similar friction and wear reduction function as the bearing claimed in the Patents-in-Suit. That is, both sliding and rolling allow one object to contact and move across another. With or without roller bearings as the friction reducing element, the running surface's profile corresponds to the shape of the bearing rail supporting it, and during operation, the running belt moves relative to the rails.

47. With respect to the use of rollers or roller bearings, users may seek to minimize friction. The mechanisms described in the references reduce friction between components, which is the purpose of bearings.

48. One of ordinary skill in the art would know that together with the curved running surface, Schmidt could have substituted wheels or roller bearings for the rails of the Schmidt device because this method was quite well known and understood.

49. Schmidt teaches a running belt comprised of an endless flexible treads made out of a plurality strips. Exh. D, p. 2, Col. 1, ll. 42-47; Figs. 2, 3.

50. The Schmidt apparatus includes adjustable "legs" or feet. Exh. D, p. 3, Col. 1, ll. 49-55; Fig. 1 (part H); claim 1.

51. The Schmidt apparatus includes a handrail. Exh. D, p. 3, Col. 1, ll. 59-62; Fig. 1 (part J).

52. Schmidt explicitly teaches an option for freely rotating or stationary front and rear shafts, as desired. Ex. D, p. 1, Col. 2, lns. 69-75. With this understanding of a stationary shaft, a person having ordinary skill would recognize that a roller could be made to rotate or be stationary by joining common power transmission elements to the roller or shaft; elements like a ratchet and pawl.

Invalidity of the Asserted Patents:

53. Each of the asserted independent claims generally includes the limitations of (a) curved running surface; (b) frame; (c) front shaft and rear shaft; (d) at least one bearing rail having a plurality of bearings, a running belt supported by the bearing rail and at least partially disposed about the front and rear shafts; and (e) a device to ensure unidirectional movement of the belt. (*E.g.*, claim 11 of the '169 patent; claims 1, 11, and 19 of the '580 patent).

54. None of these limitations is novel over the prior art alone or in combination.

55. Prior art manual treadmills include a frame to provide structure and support for the treadmill.

56. As set forth above, Schmidt, Socwell and Chickering all disclose a frame that provides structure and support for a manual treadmill with a curved running surface, and Magid discloses a "functional support frame" that provides structure and support for a manual treadmill. In light of the Court's claim construction, Magid also constitutes a curved treadmill.

57. As set forth above, Schmidt, Socwell, Chickering and Magid all disclose a front shaft and a rear shaft.

58. With respect to the bearing rail, Schmidt induces the running belt to assume and maintain the non-planar shape, and thus as recognized by subsequent prior art, teaches a simplified and streamlined system that keeps the belt from walking side-to-side during usage.

59. Schmidt taught that the weight of the belt, pulling down on it by gravity combined with slack in the belt causes the belt to maintain contact with the rails below it, allowing the profile of the running surface to conform to the rails below it.

60. One of ordinary skill in the art would know that together with the curved running surface, Schmidt could have used the pre-existing art and incorporated wheels or bearings into the rails of the Schmidt device because this method was well known and understood.

61. Schmidt discloses at least one bearing rail separate from the frame, a running belt supported by the bearing rail and at least partially disposed about the front and rear shafts. Two objects in relative motion to each other while in contact with one another will either slide or roll. Whether to use sliding or roller bearings is simply a matter of design choice.

62. With or without roller bearings as the friction reducing element, Schmidt's running surface's profile corresponds to the shape of the bearing rail supporting it; during operation, the running belt moves relative to the rails. Therefore a person having ordinary skill would recognize that the two means are equivalent and that the use of roller bearings or bearings without internal components represents substituting well known components to achieve the same results already achieved by the prior art.

63. Chickering expressly discusses the issue of retaining the belt in the curved profile is weighing the benefits of using a single belt with the rollers or the two belt system. Chickering discloses that if the user selects the one belt system, the belt must be fairly heavy because it would only remain in contact with the rollers by virtue of its weight alone. Ex. A, Col. 3, ll. 10-17. The bearing rail disclosed in Chickering, i.e., the longitudinal side members (14) that are pivotally mounted to the frame with a plurality of anti-friction rollers with their ends journaled in the side members/arms support the running belt, which are partially disposed on the front and

rear shafts (26).

64. Socwell also discusses systems to ensure retention of the curved running profile, including the structure that meet the bearing rail limitation. Exh. B, Col. 9, l. 43- Col. 10, l. 38.

65. Magid teaches a continuous belt (4, 4') disposed around a front (41) and rear shaft (42). The front and rear shafts are rotatably joined directly or indirectly to longitudinal members attached to the frame/base. Exh. C, Col. 2, ll. 1-16; Col. 6, ll. 53-64; claim 1; Fig. 8. Magid's Figure 8 shows the rollers/bearings, continuous belt (4, 4') disposed around a front (41) and rear shaft (42), and the bearing rail (24) separate from the frame (11).

A Device to Ensure Unidirectional Movement of the Belt

66. At least as early as 2005 and 2009 International Standards Organization ("ISO") and the European Standard Technical Committees ("EN") defined a treadmill as "training equipment with a unidirectional moving surface on which a walking or running activity can take place where the feet are free to leave the moving surface."

67. Based on this, it is obvious to a person having ordinary skill in the art as of 2009 that a unidirectional moving surface, including a unidirectional moving surface on a treadmill, is not novel.

68. A person having ordinary skill in the art as of 2009 would be aware of the commodity power transmission products that can ensure unidirectional movement of a belt, e.g., a one-way bearing assembly, locking systems, taper locks, user operated pin system, or a band brake with a lever.

69. Schmidt discloses a device to ensure unidirectional movement in that the reference by explicitly teaching an option for freely rotating or stationary front and rear shafts, as desired. The roller could be made to rotate or be stationary by joining common power

transmission elements to the roller or shaft; elements like a ratchet and pawl.

70. Magid explicitly teaches a ratchet and pawl "unidirectional control mechanism" on a rear shaft (Ex. D, Col. 4, ll. 47-49) that restricts the treadmill belt to movement in a single direction of travel:

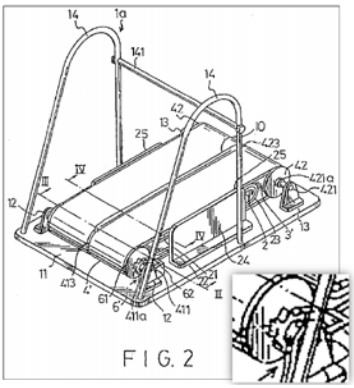

71. The ratchet and pawl is an old and well known power transmission device that is commonly used in conjunction with bearings or rollers to maintain unidirectional motion. A one way bearing can also generally be used in the same circumstances to achieve unidirectional motion.

72. Socwell also expressly warns that "if the rollers supportably disposed in relation to the endless belt are so easily moveable, the user may potentially lose his equilibrium or balance and fall from the exercise treadmill resulting in possible injuries." Exh. B, Col., 1, ll. 23-32. To address the safety issue Socwell claims that the running surface is selectively movable; "selectorized," is a term common to fitness equipment and fitness equipment standards indicating discrete and limited movement. Exh. B, claims 1 and 14.

Motivation to Combine

73. All four references identified are analogous. All are in the same field of endeavor, regardless of the problem addressed, and to the extent the reference is not in the field of the inventor's endeavor, the reference is reasonably pertinent to the particular problem with

which the inventor is involved. Here, all references are in the same field: non-motorized, leg powered exercise equipment. The USPTO Field of Search for Magid is 482/54, 69; 198/783; the Field of Search for Socwell also includes 482/54, and Socwell cites to Schmidt.

74. Here, all of the limitations of the Patents-in-Suit are present in prior art references, as discussed above, and the inclusion of the safety device to ensure the undirectionality of the running surface addressed a known problem, i.e. the danger of injury from unexpected movement of the belt, identified expressly in the prior art.

75. The design need (including liability insurance requirements) and/or market pressure to sell a safe device all were known in the art, and there is a finite number of identified, predictable solutions to ensure that the running surface only moves in one direction. Each of the references identified noted the concern of a user becoming injured as a result of unexpected belt movement.

76. As a result, a person of ordinary skill in the art had good reasons to pursue the known options within his or her technical grasp (e.g., inclusion of a one-way bearing, or a ratchet and pawl), and it is clear that a skilled artisan would have perceived a reasonable expectation of success as a result of combining the elements of a non-motorized treadmill with a curved running surface and a safety device on one of the shafts to ensure the running surface moves in only one direction.

77. Technology prior to 2009 made one way bearing mechanisms smaller, reliable and cost-effective in comparison to the old and well known ratchet and pawl mechanism. As a result, one of ordinary skill in the art, a person who is certainly familiar with both types of devices, would accordingly recognize that those light weight, inexpensive and easy to install mechanisms would restrict the movement of the belt to one direction.

I declare, under the penalties of the law, the foregoing to be true and accurate to the best of my knowledge.

/s/ Robert Giachetti
Robert Giachetti

(Original, signed version dated May 1, 2017 available)

Dated: May 1, 2017

EX2009
Woodway USA, Inc.
IPR2023-00849

CERTIFICATION OF SERVICE

I hereby certify that on May 1, 2017, a copy of the foregoing Declaration of Robert Giachetti was filed electronically and served by mail on anyone unable to accept electronic filing. Notice of this filing will be sent by email to all parties by operation of the Court's electronic filing system or by mail to anyone unable to accept electronic filing as indicated on the Notice of Electronic Filing. Parties may access this filing through the Court's CM/ECF system.

James T. Shearin, Esq.
Nathaniel J. Gentile, Esq.
Pullman & Comley, LLC
850 Main Street
P.O. Box 7006
Bridgeport, CT 06601-7006
jtshearin@pullcom.com ngentile@pullcom.com

Kadie M. Jelenchick, Esq. (*pro hac vice*)
R. Spencer Montei (*pro hac vice*)
Foley & Lardner LLP
777 East Wisconsin Avenue
Milwaukee, WI 53202-5306
kjelenchick@foley.com

/s/ Christine K. Bush