US007115073B2

(12) **United States Patent**
Nizamuddin

(10) **Patent No.: US 7,115,073 B2**
(45) **Date of Patent: *Oct. 3, 2006**

(54) **EXERCISE APPARATUS FOR SIMULATING SKATING MOVEMENT**

(75) Inventor: **Nash Nizamuddin**, Thornhill (CA)

(73) Assignee: **Skatestrider Inc.**, Thornhill (CA)

(*) Notice: Subject to any disclaimer, the term of this patent is extended or adjusted under 35 U.S.C. 154(b) by 204 days.

This patent is subject to a terminal disclaimer.

(21) Appl. No.: **10/873,254**

(22) Filed: **Jun. 23, 2004**

(65) **Prior Publication Data**

US 2004/0241631 A1 Dec. 2, 2004

Related U.S. Application Data

(63) Continuation-in-part of application No. 09/909,020, filed on Jul. 20, 2001, now Pat. No. 6,786,850.

(60) Provisional application No. 60/237,387, filed on Oct. 4, 2000.

(30) **Foreign Application Priority Data**

May 7, 2004 (CA) 2466543

(51) **Int. Cl.**
A63B 69/00 (2006.01)
A63B 69/18 (2006.01)

(52) **U.S. Cl.** **482/51**; 482/71; 482/79; 482/110; 482/116; 482/135; 434/253

(58) **Field of Classification Search** 482/51–53, 482/70, 71, 79, 116, 127, 907, 11, 93, 105, 482/110, 135; 434/247, 253; 280/842
See application file for complete search history.

(56) **References Cited**

U.S. PATENT DOCUMENTS

3,591,172	A *	7/1971	Hude	482/71
3,756,595	A	9/1973	Hague	
4,340,214	A	7/1982	Schutzer	
4,396,189	A *	8/1983	Jenkins	482/71
4,645,202	A *	2/1987	Tomba et al.	482/71
4,669,723	A *	6/1987	Arsenian	482/71
4,744,557	A	5/1988	Smirmaul	
4,781,372	A	11/1988	McCormack	
4,811,941	A	3/1989	Elo	
4,869,496	A	9/1989	Colombo	
4,911,430	A	3/1990	Flament	

(Continued)

FOREIGN PATENT DOCUMENTS

CA	2407758		10/2002
CH	673092	A5 *	2/1990

Primary Examiner—Jerome Donnelly
Assistant Examiner—Victor K. Hwang

(57) **ABSTRACT**

An exercise apparatus used to simulate skating or roller blading movement in a user includes a pair of sleds or shuttles which include a pedal adapted to support the foot of a user standing thereon. The shuttles are movable along a respective guide assembly consisting of one or more rails which curve away from each other extending from proximate forwardmost ends, outwardly and rearwardly. The rail assemblies are provided in a substantially mirror arrangement and curve downwardly from their respective forwardmost ends to a lowermost distal portion. A guide member is provided to assist in positioning and maintaining the shuttles in sliding movement along each guide assembly, whereby the reciprocal sliding movement of the shuttles along an associated guide assembly acts to guide the feet of the user in skating or roller blade movement.

39 Claims, 18 Drawing Sheets

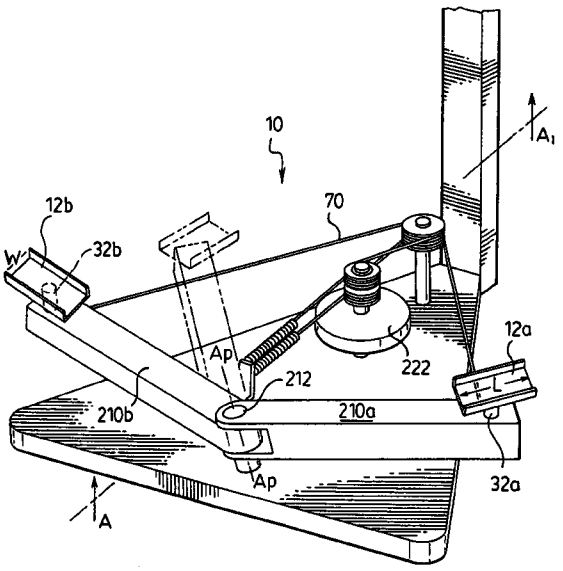

EX2011
Woodway USA, Inc.
IPR2023-00849

U.S. PATENT DOCUMENTS

4,915,373	A		4/1990	Walker	
5,222,928	A		6/1993	Yacullo	
5,279,532	A		1/1994	Chen	
5,284,460	A		2/1994	Miller et al.	
5,304,106	A	*	4/1994	Gresko	482/53
5,328,427	A		7/1994	Sleamaker	
5,391,130	A		2/1995	Green et al.	
5,496,239	A	*	3/1996	Kallman et al.	482/71
5,503,609	A		4/1996	Bull	
5,520,598	A		5/1996	Little	
5,536,225	A	*	7/1996	Neuberg et al.	482/71
5,637,060	A		6/1997	de Souza	
5,643,153	A		7/1997	Nylen et al.	
5,665,033	A	*	9/1997	Palmer	482/71
5,692,995	A	*	12/1997	Alvarez et al.	482/71
5,713,794	A		2/1998	Shimojima et al.	
5,718,658	A		2/1998	Miller et al.	
5,855,538	A		1/1999	Argabright	
5,911,650	A	*	6/1999	Cox	482/70
6,106,442	A	*	8/2000	Tissue	482/71
6,234,935	B1		5/2001	Chu	
6,514,180	B1	*	2/2003	Rawls	482/70
6,695,749	B1	*	2/2004	Kuo	482/53
6,786,850	B1	*	9/2004	Nizamuddin	482/51
7,014,595	B1	*	3/2006	Bruno	482/51
2002/0145926	A1	*	10/2002	Lat	482/52
2005/0014613	A1	*	1/2005	Chu	482/79
2005/0079956	A1	*	4/2005	Bruno	482/51
2005/0272562	A1	*	12/2005	Alessandri et al.	482/52

* cited by examiner

EX2011
Woodway USA, Inc.
IPR2023-00849

FIG. 1

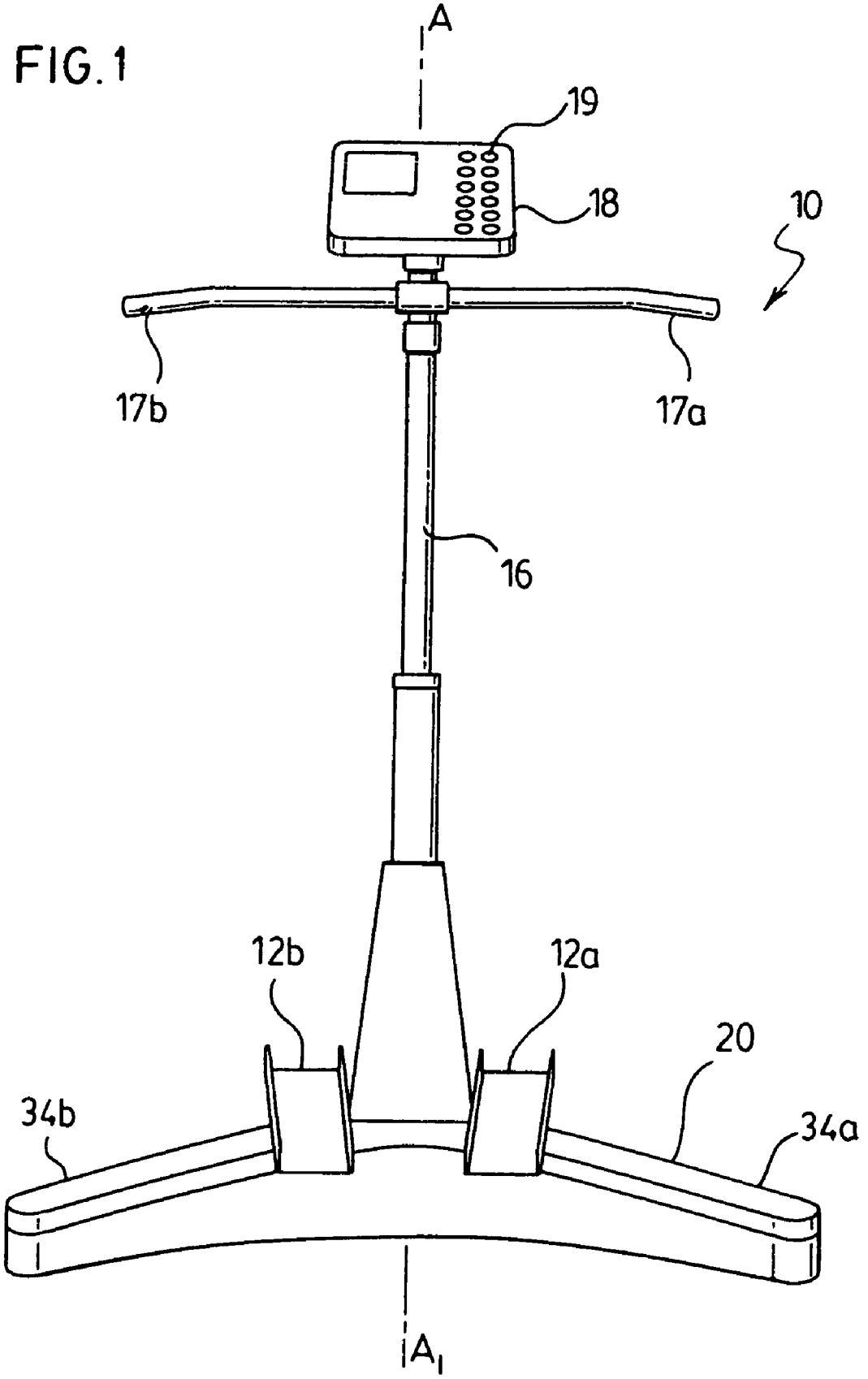

EX2011
Woodway USA, Inc.
IPR2023-00849

FIG. 2

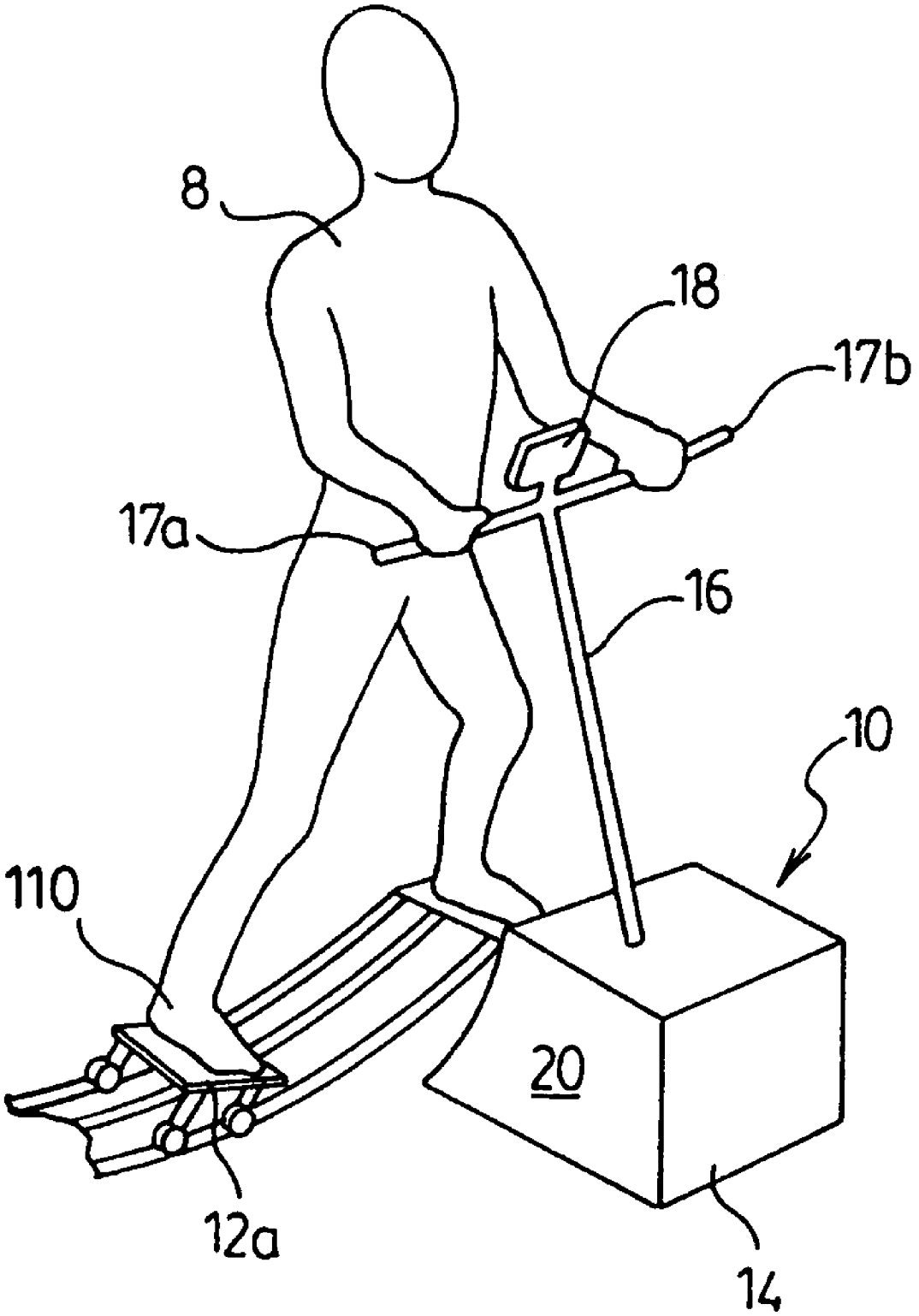

EX2011
Woodway USA, Inc.
IPR2023-00849

FIG. 3

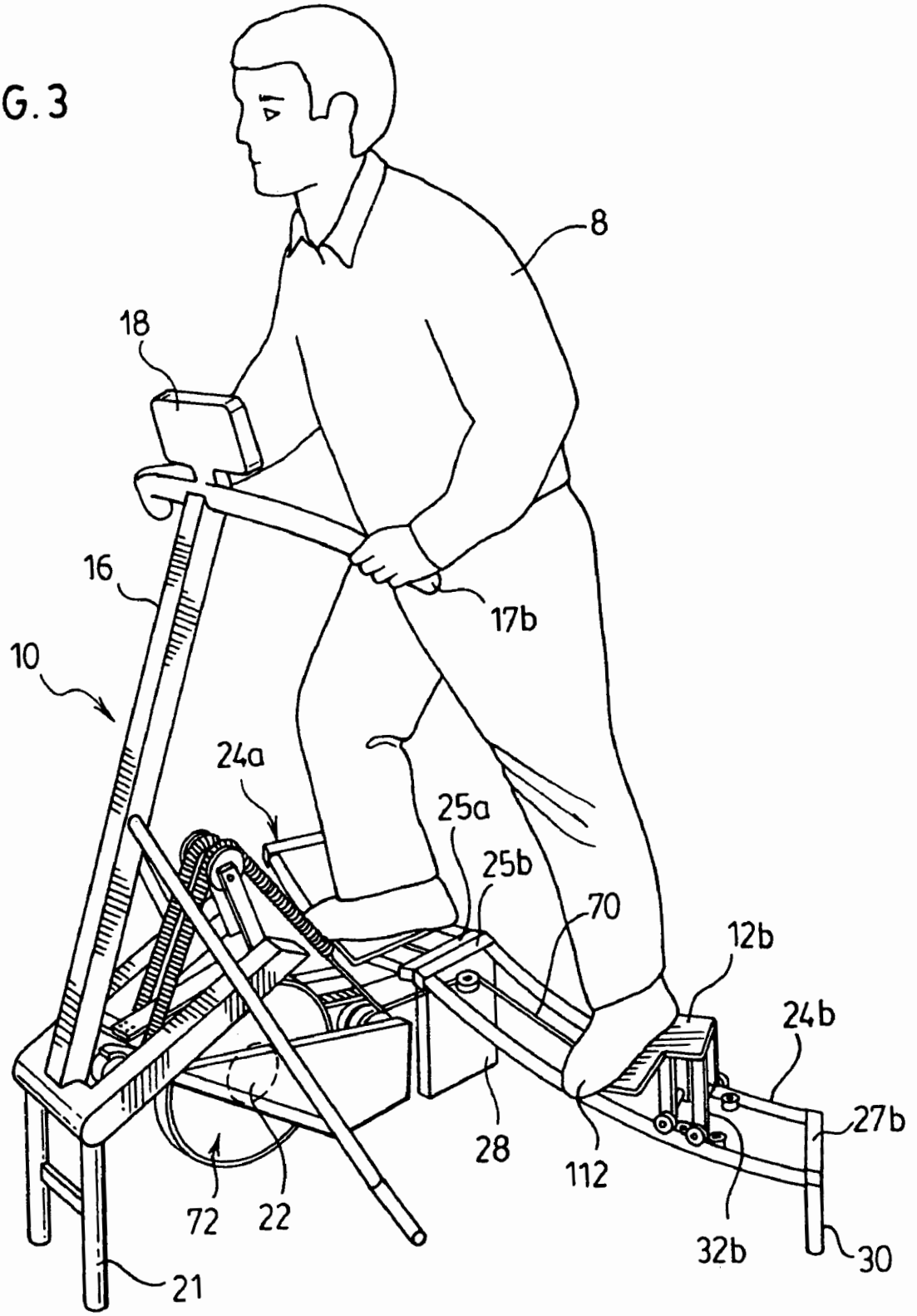

EX2011
Woodway USA, Inc.
IPR2023-00849

FIG. 4

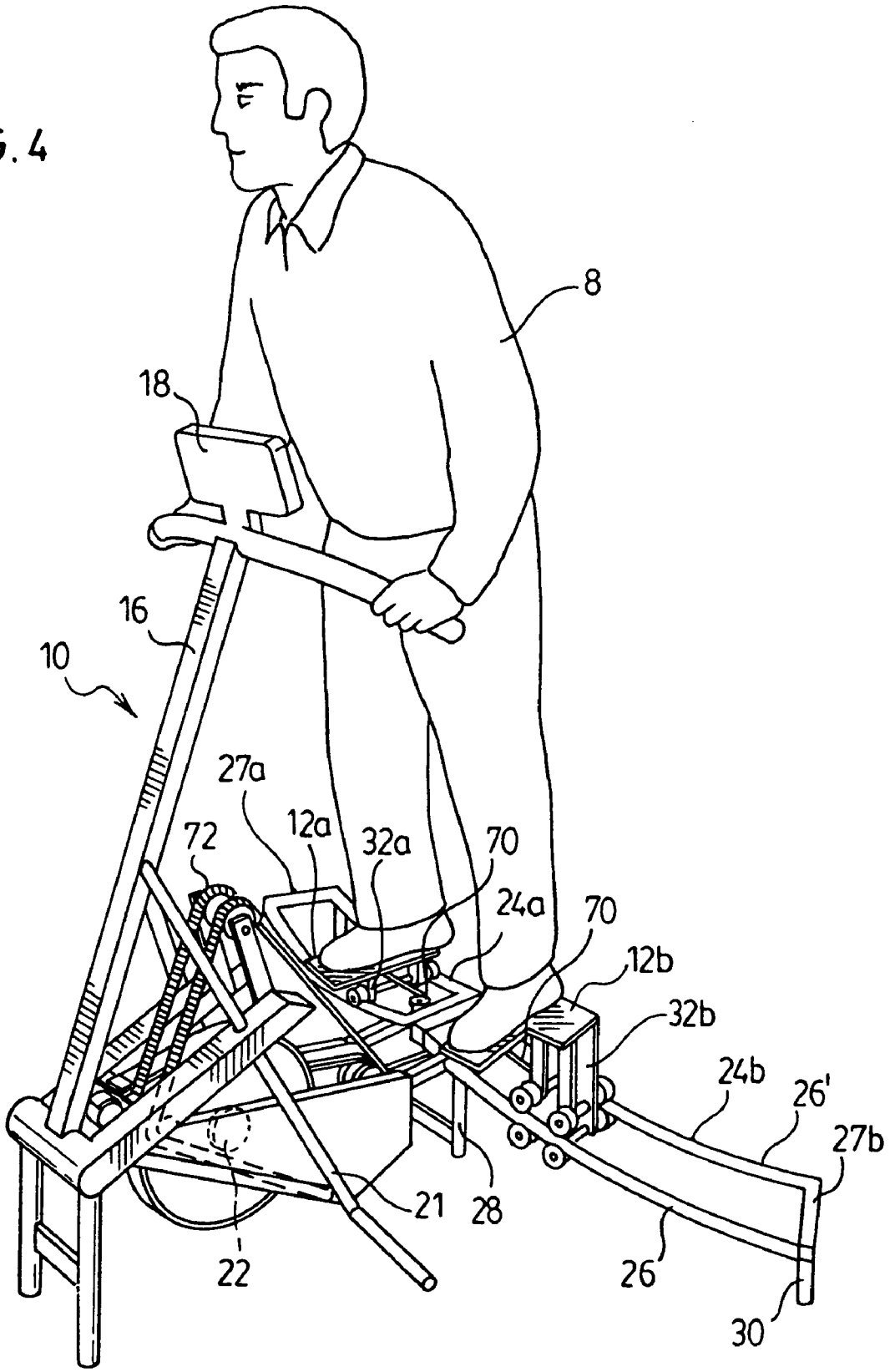

EX2011
Woodway USA, Inc.
IPR2023-00849

FIG. 5

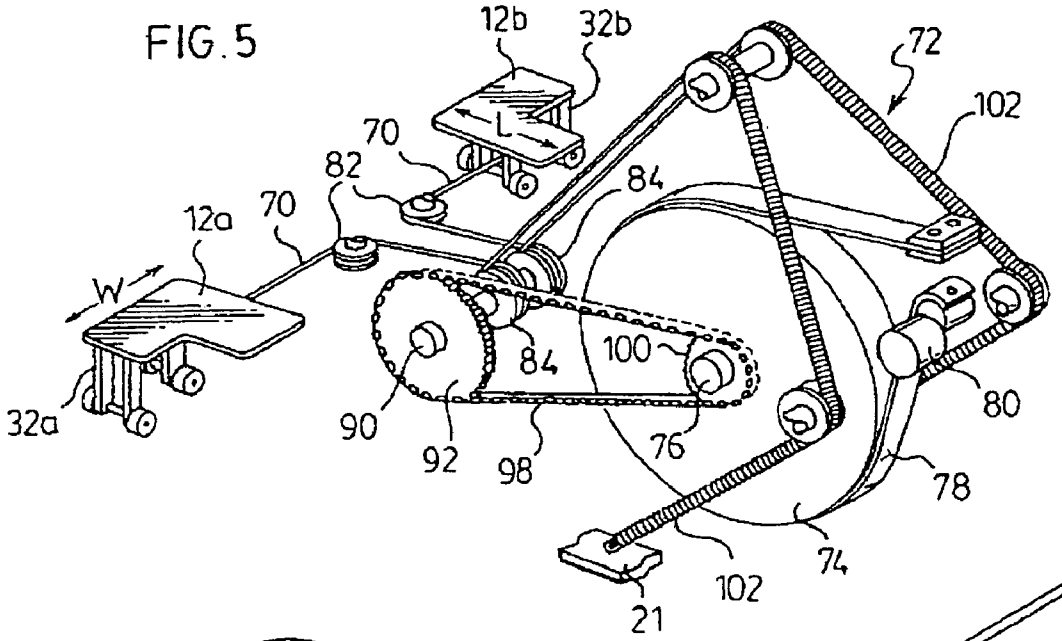

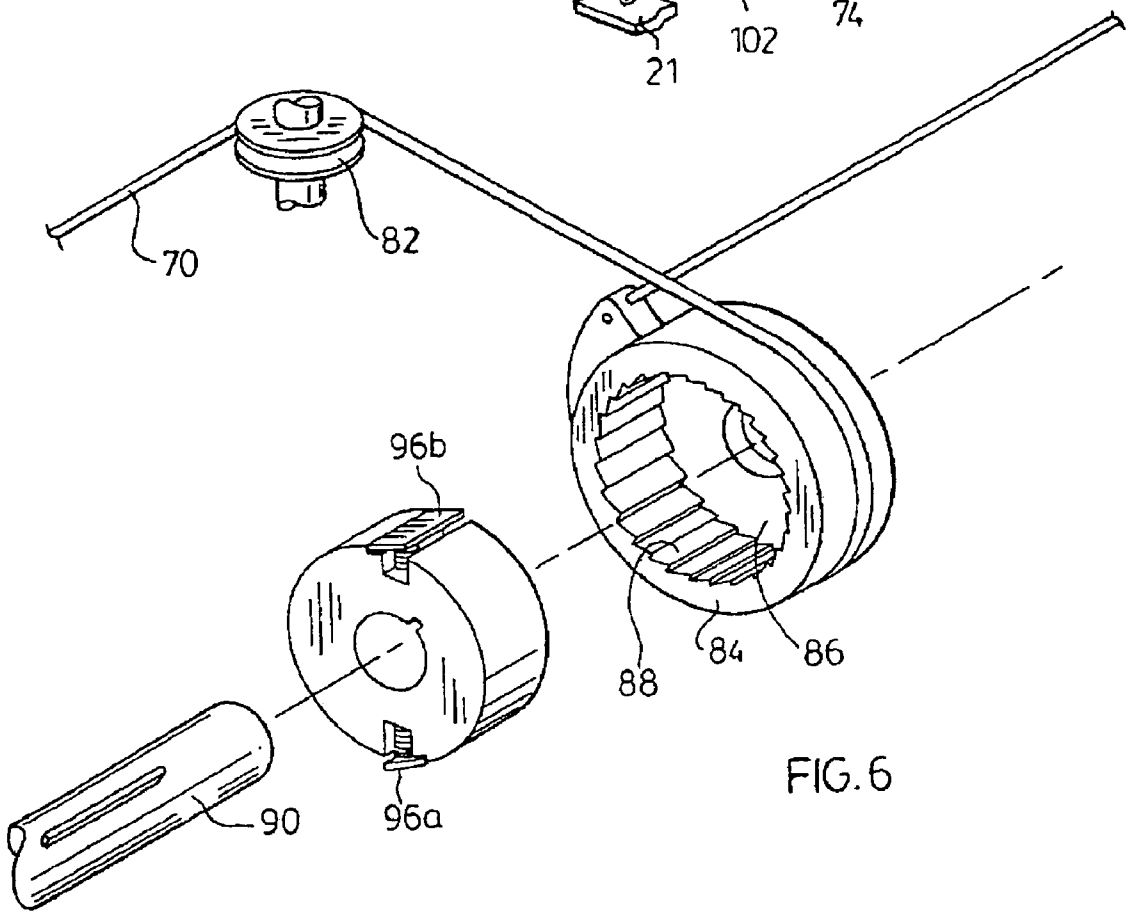

FIG. 6

EX2011
Woodway USA, Inc.
IPR2023-00849

FIG. 7

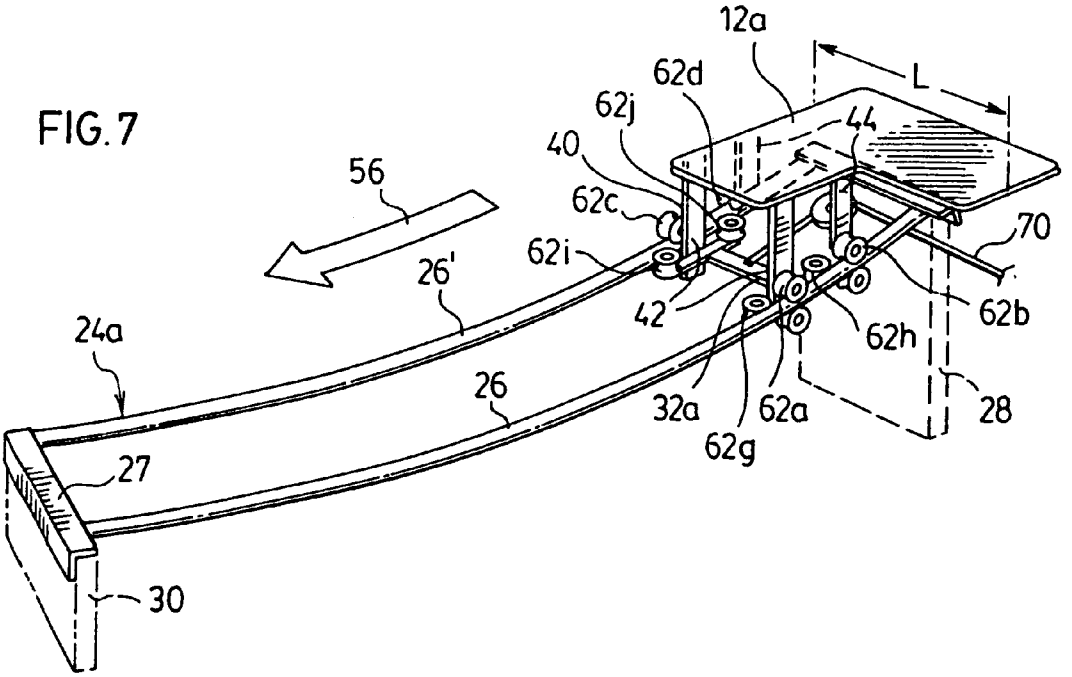

FIG. 8

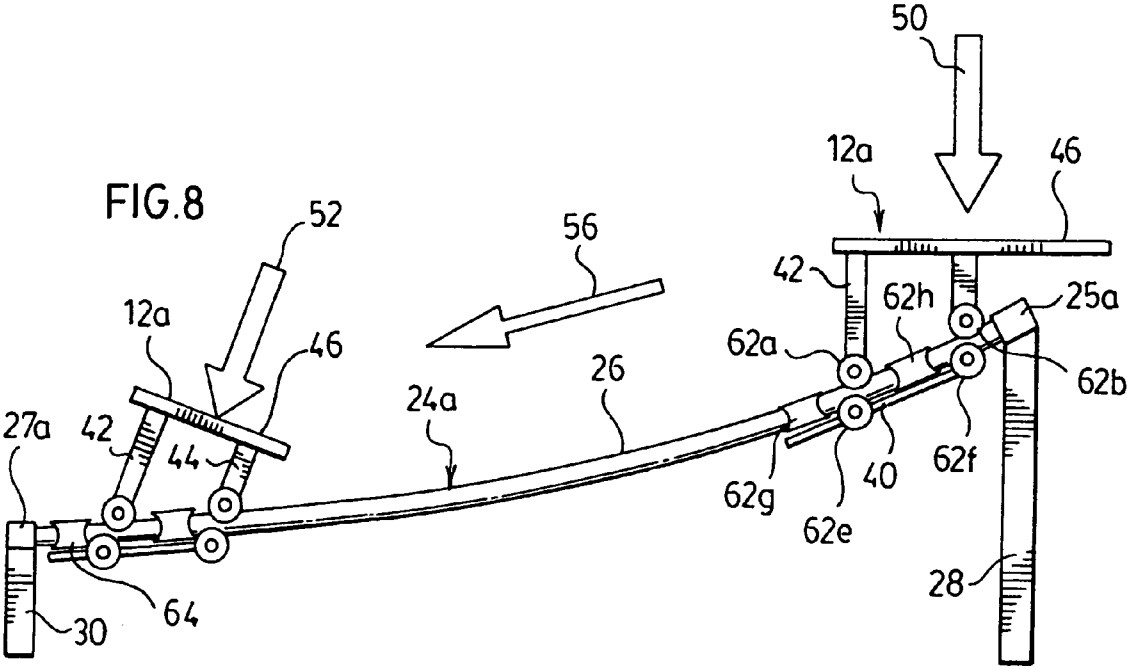

EX2011
Woodway USA, Inc.
IPR2023-00849

FIG.9

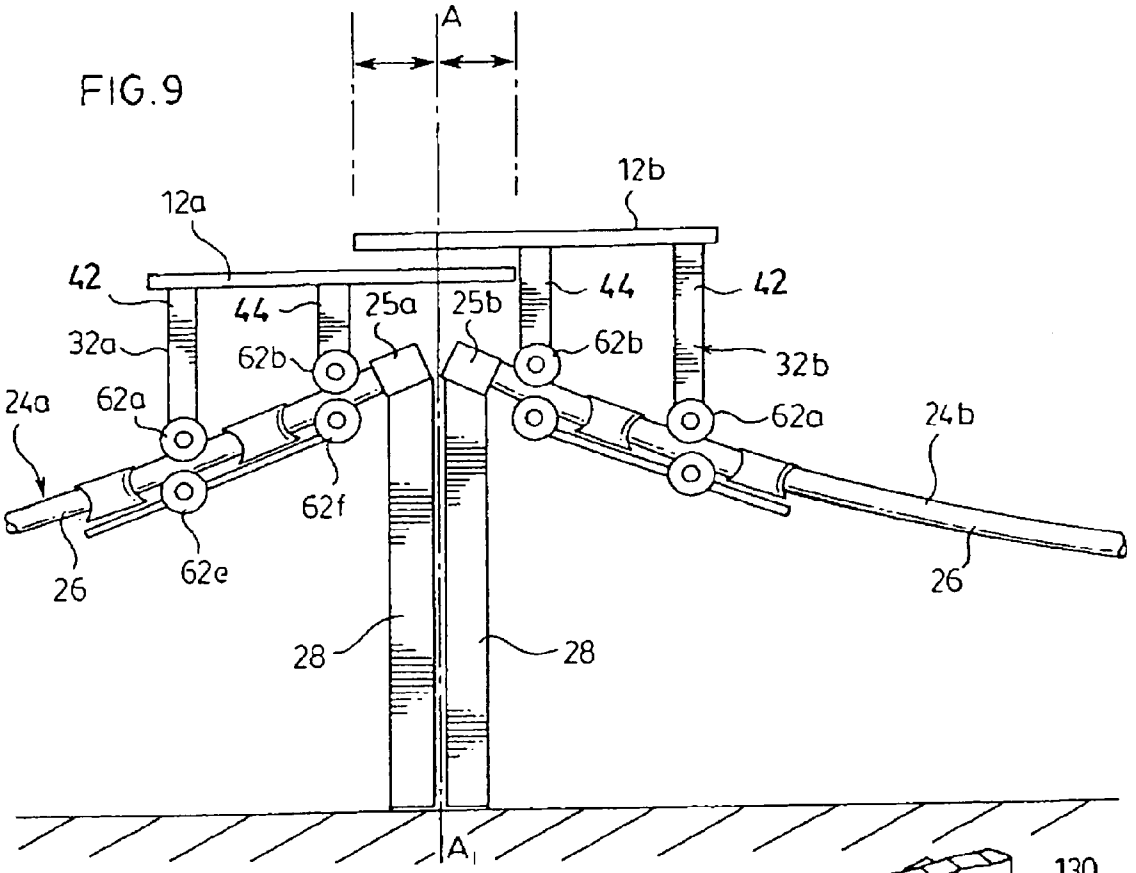

FIG.10

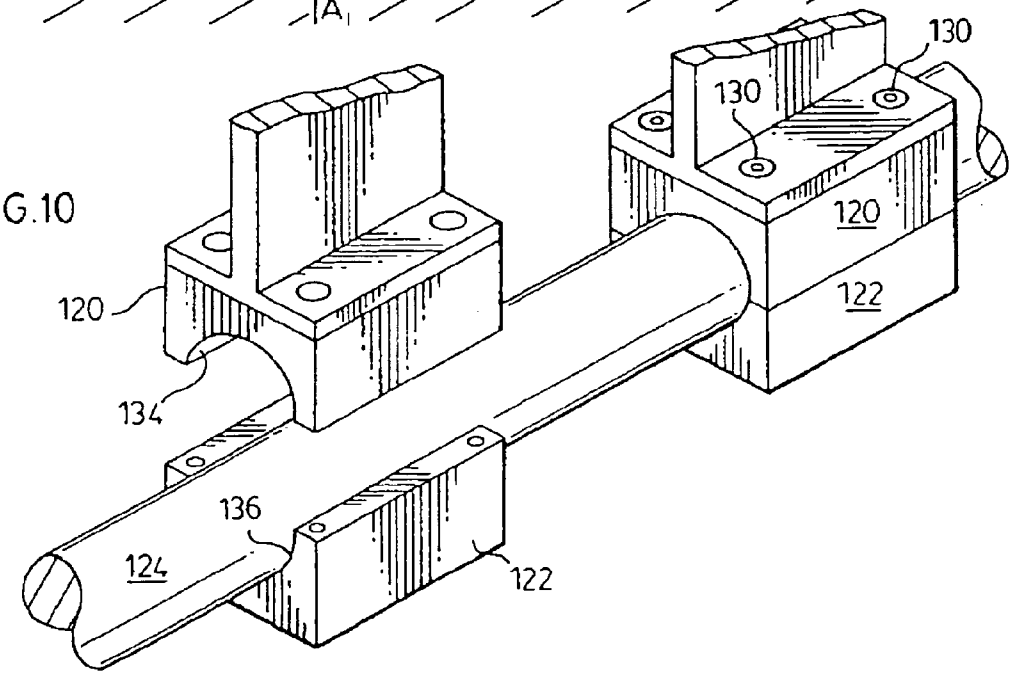

EX2011
Woodway USA, Inc.
IPR2023-00849

FIG. 11.

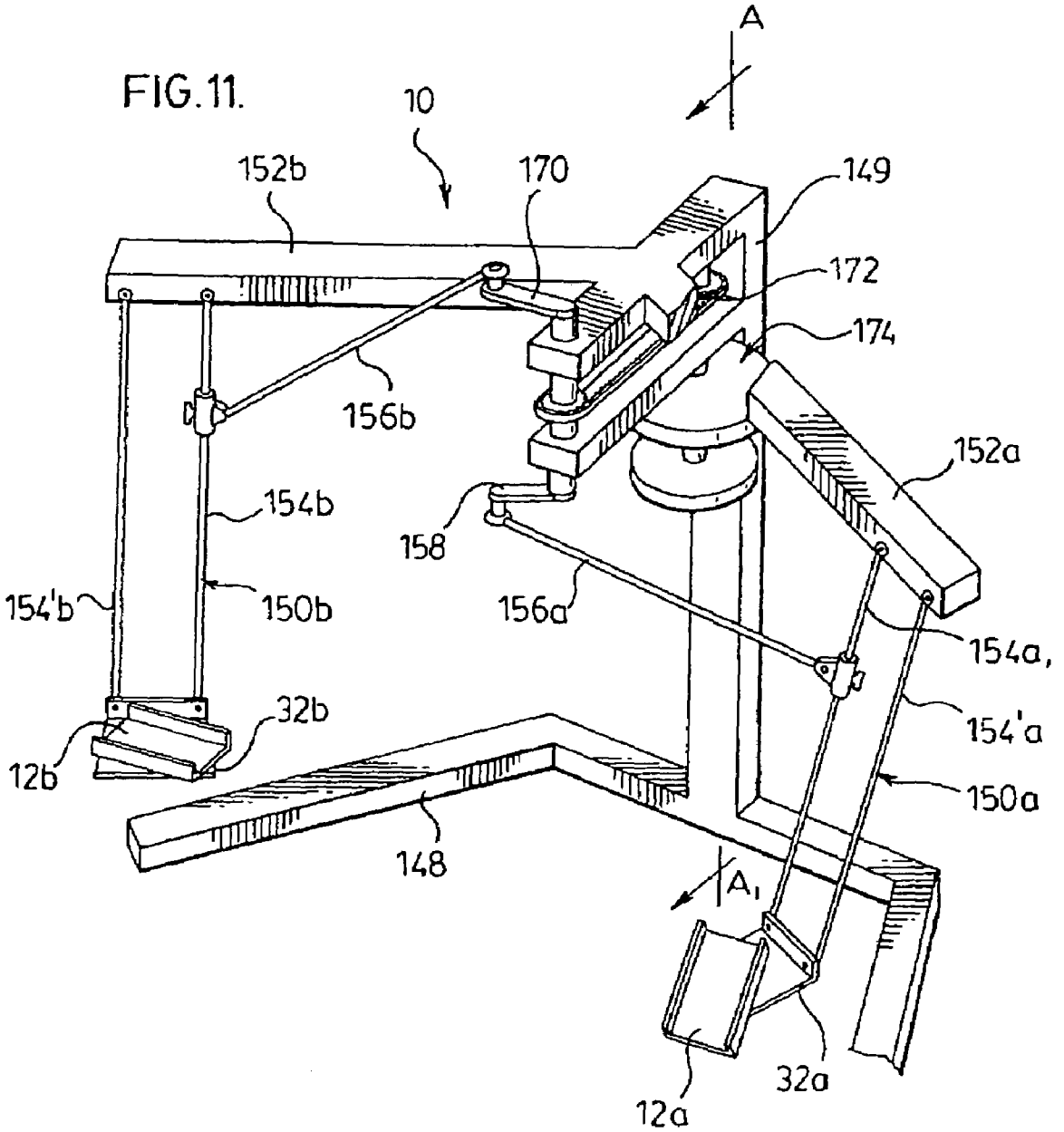

EX2011
Woodway USA, Inc.
IPR2023-00849

FIG. 12

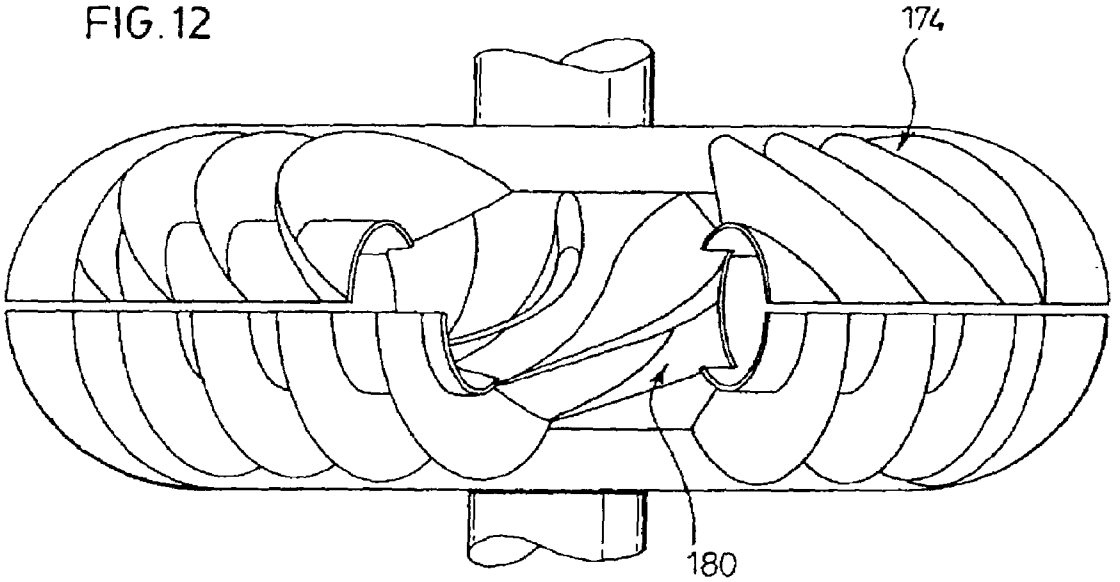

FIG. 13

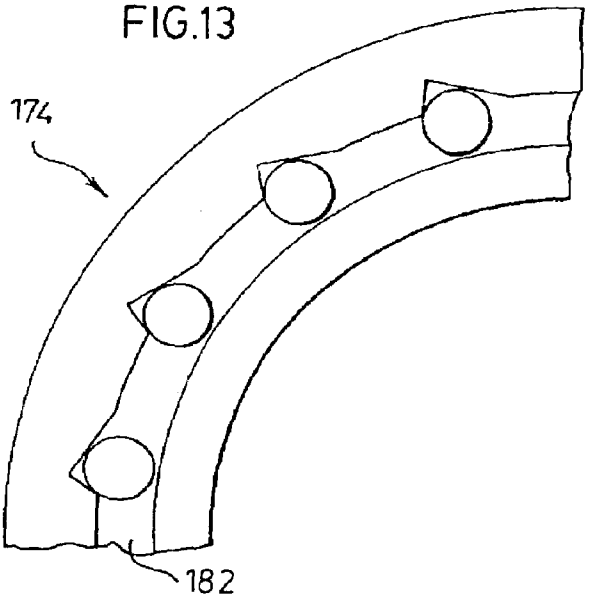

EX2011
Woodway USA, Inc.
IPR2023-00849

FIG.14

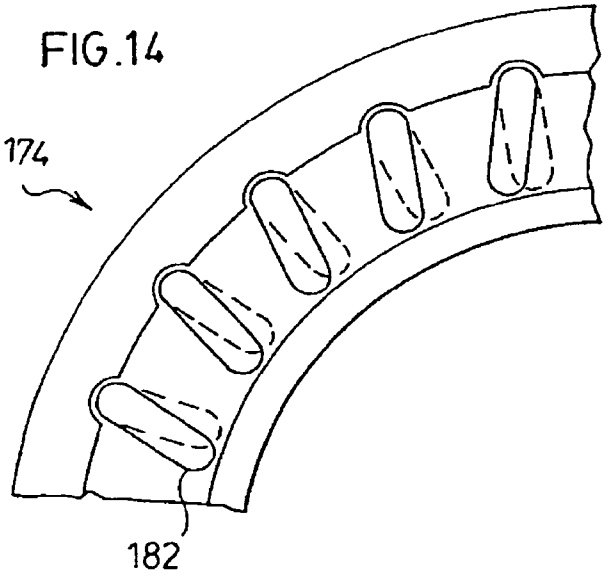

FIG.15

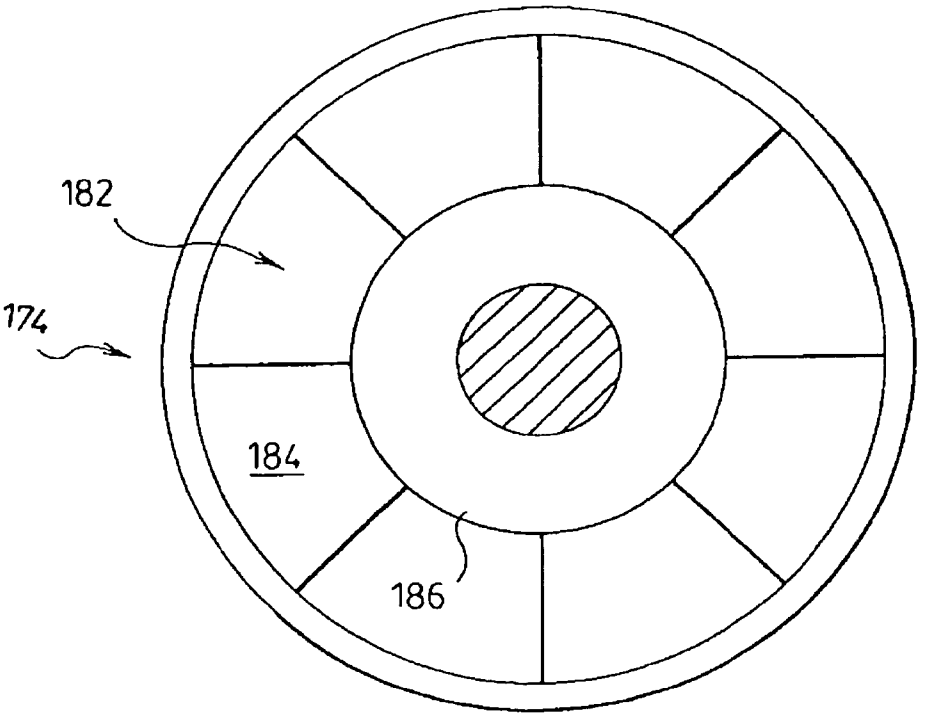

EX2011
Woodway USA, Inc.
IPR2023-00849

FIG.16

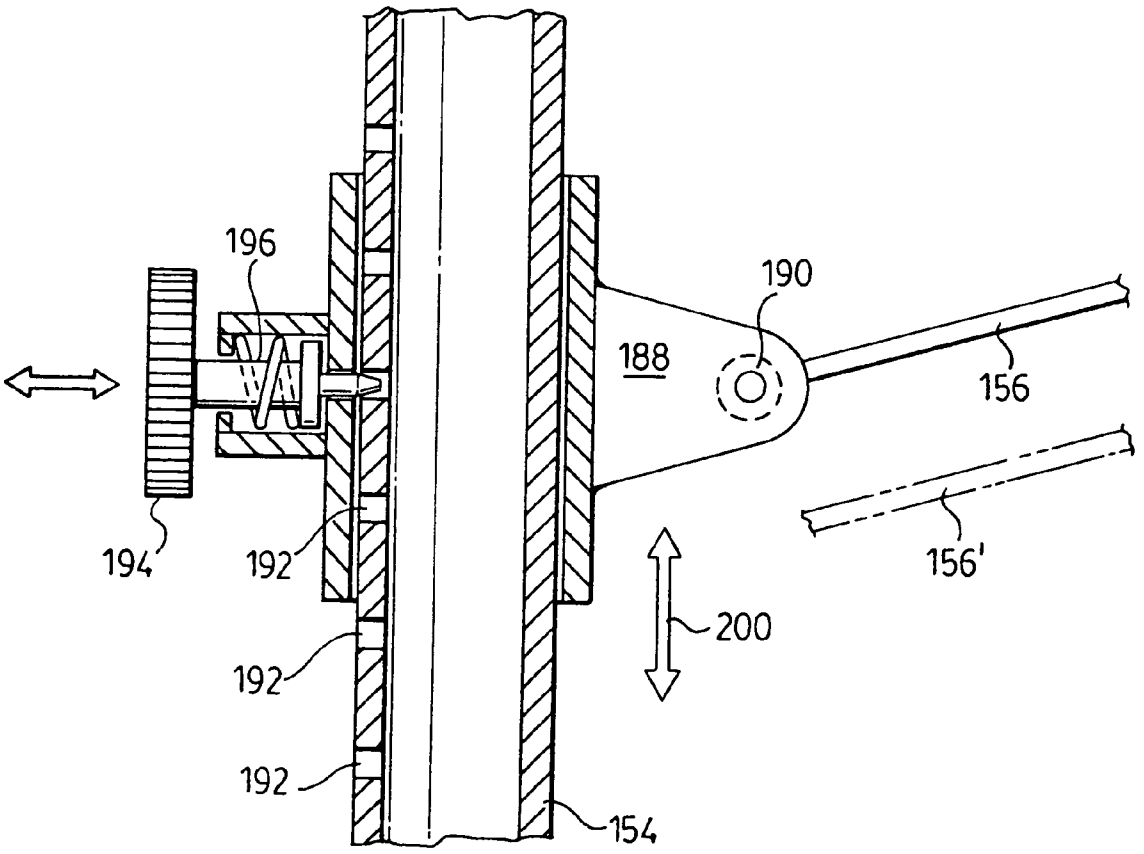

EX2011
Woodway USA, Inc.
IPR2023-00849

FIG. 17

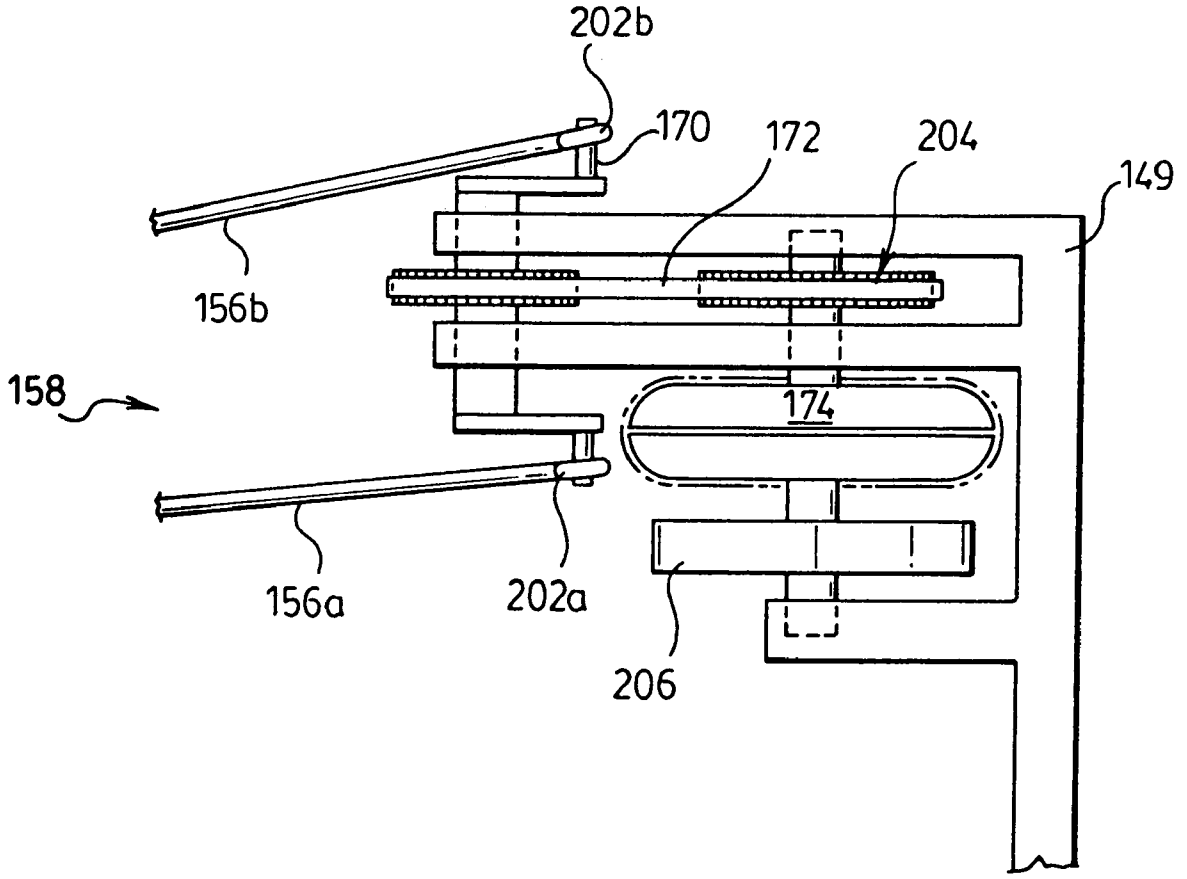

EX2011
Woodway USA, Inc.
IPR2023-00849

FIG. 18

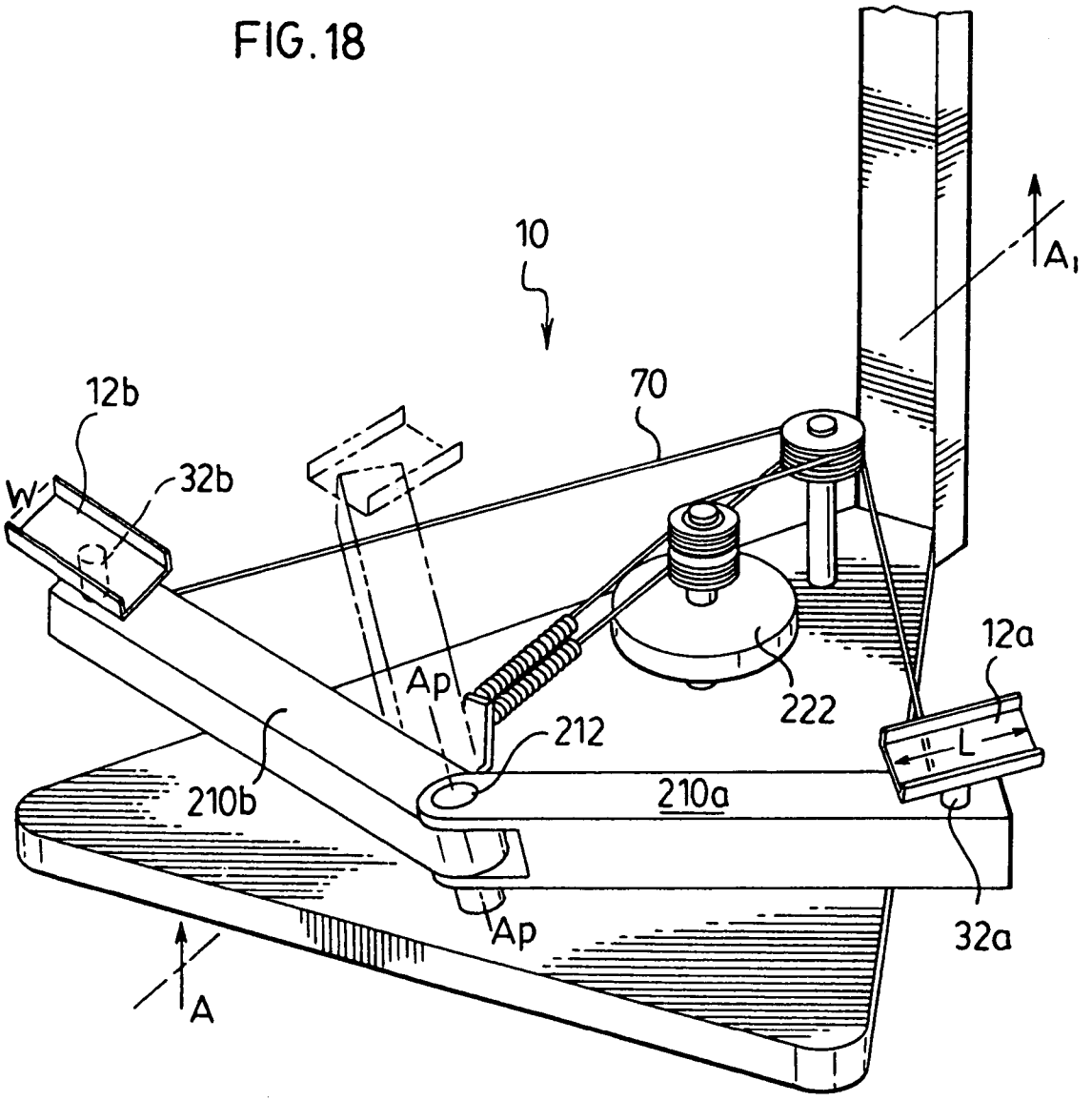

EX2011
Woodway USA, Inc.
IPR2023-00849

FIG. 19

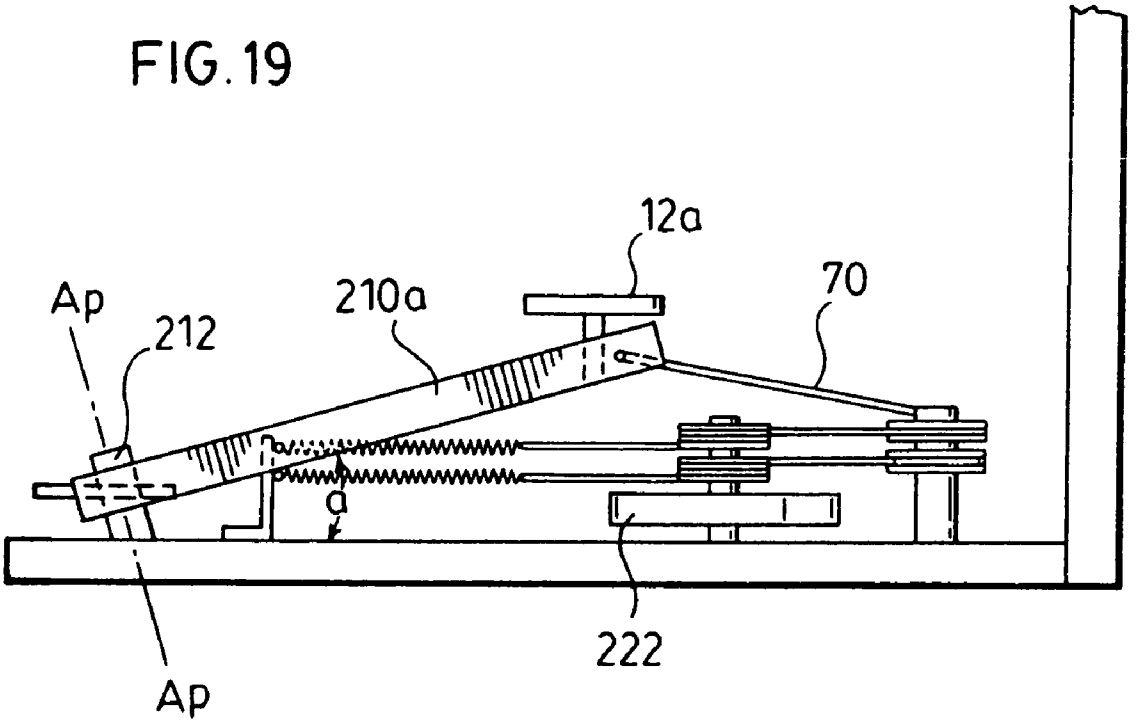

FIG. 20

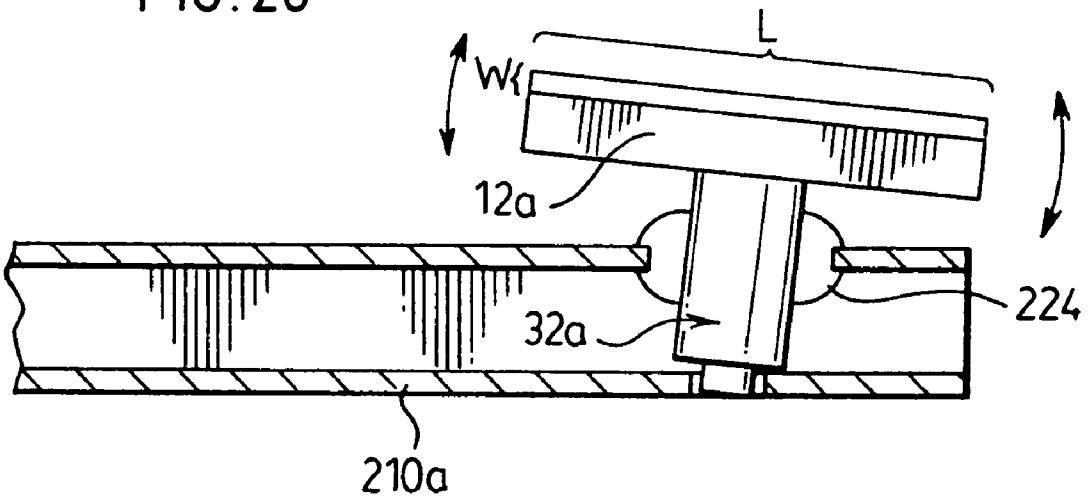

EX2011
Woodway USA, Inc.
IPR2023-00849

FIG. 21

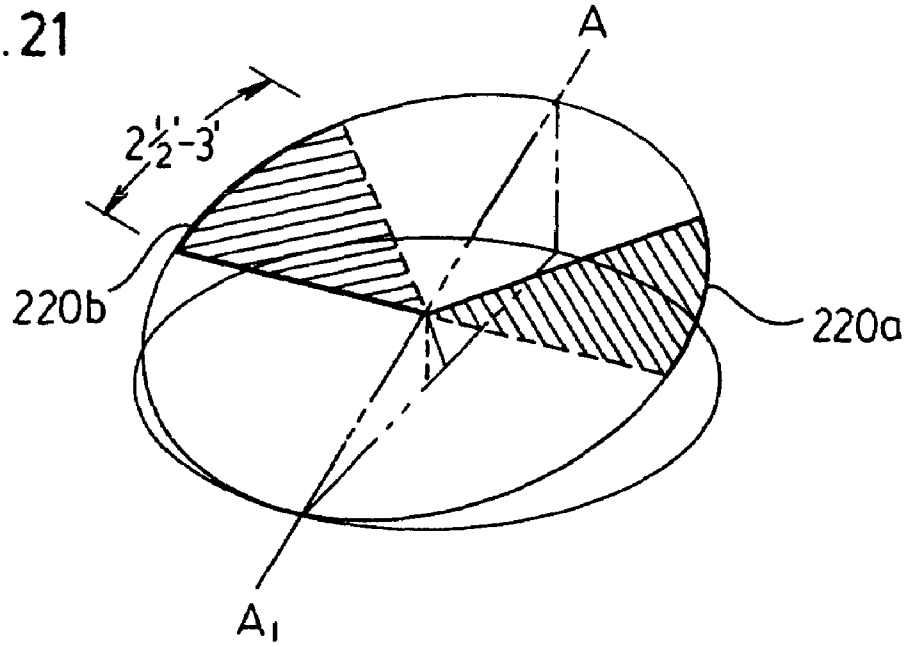

FIG. 22a

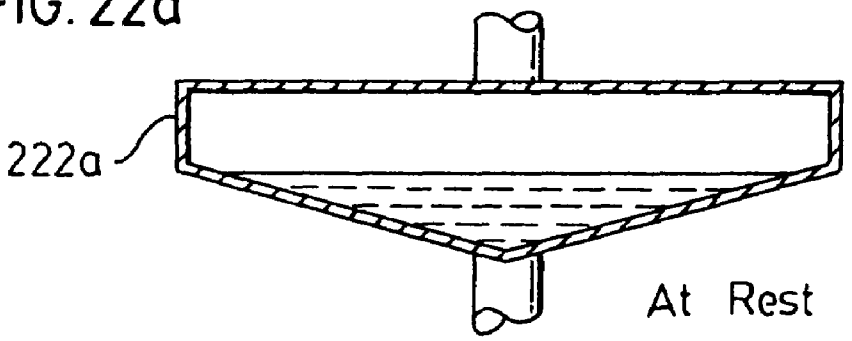

FIG. 22b

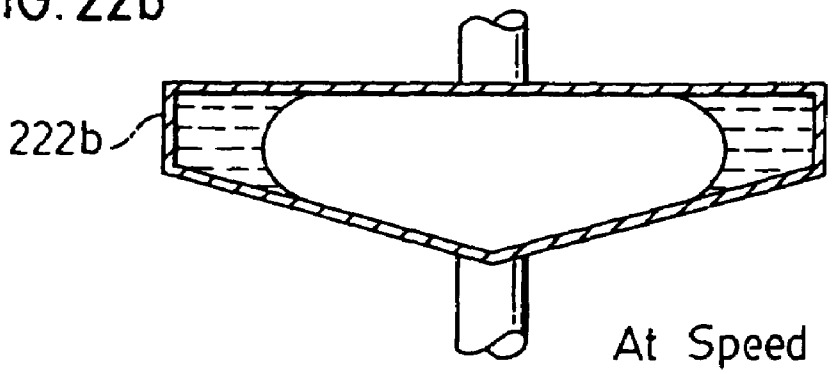

EX2011
Woodway USA, Inc.
IPR2023-00849

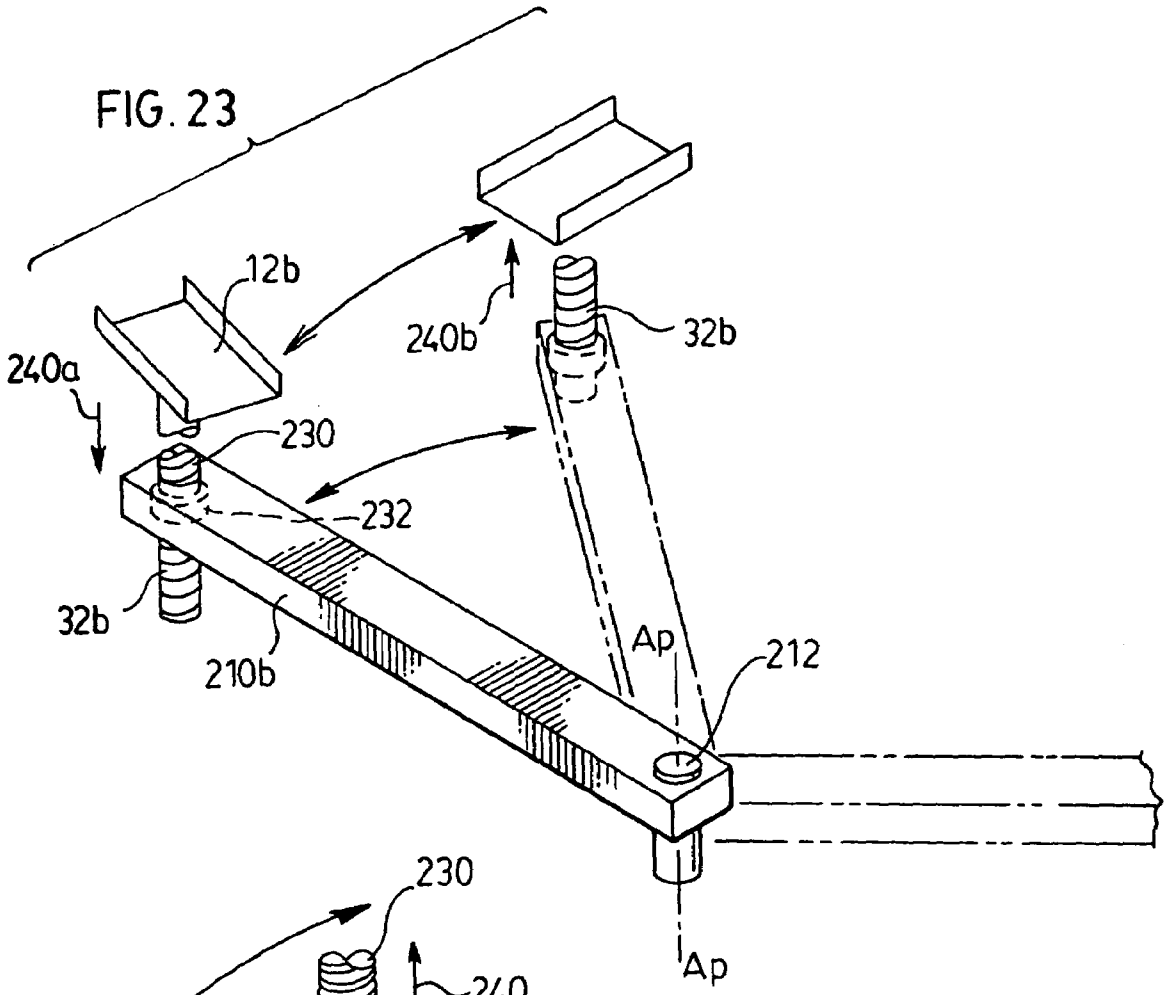

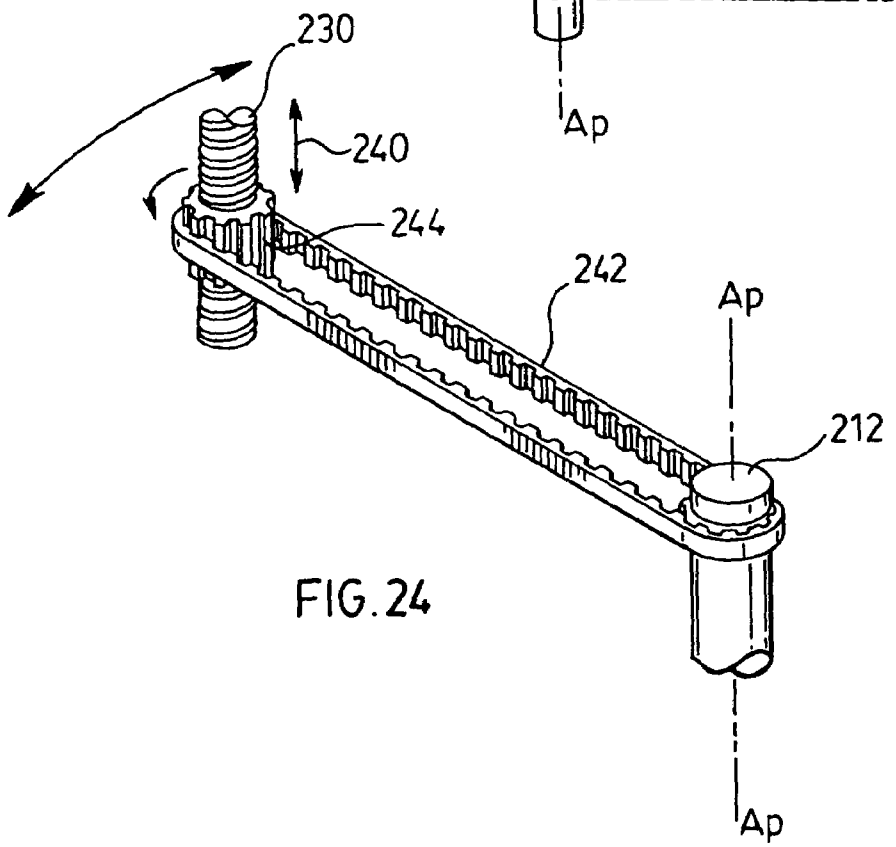

FIG. 24

EX2011
Woodway USA, Inc.
IPR2023-00849

FIG. 25

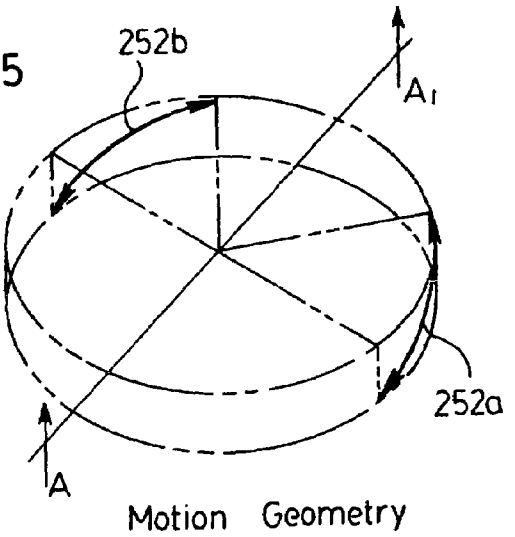

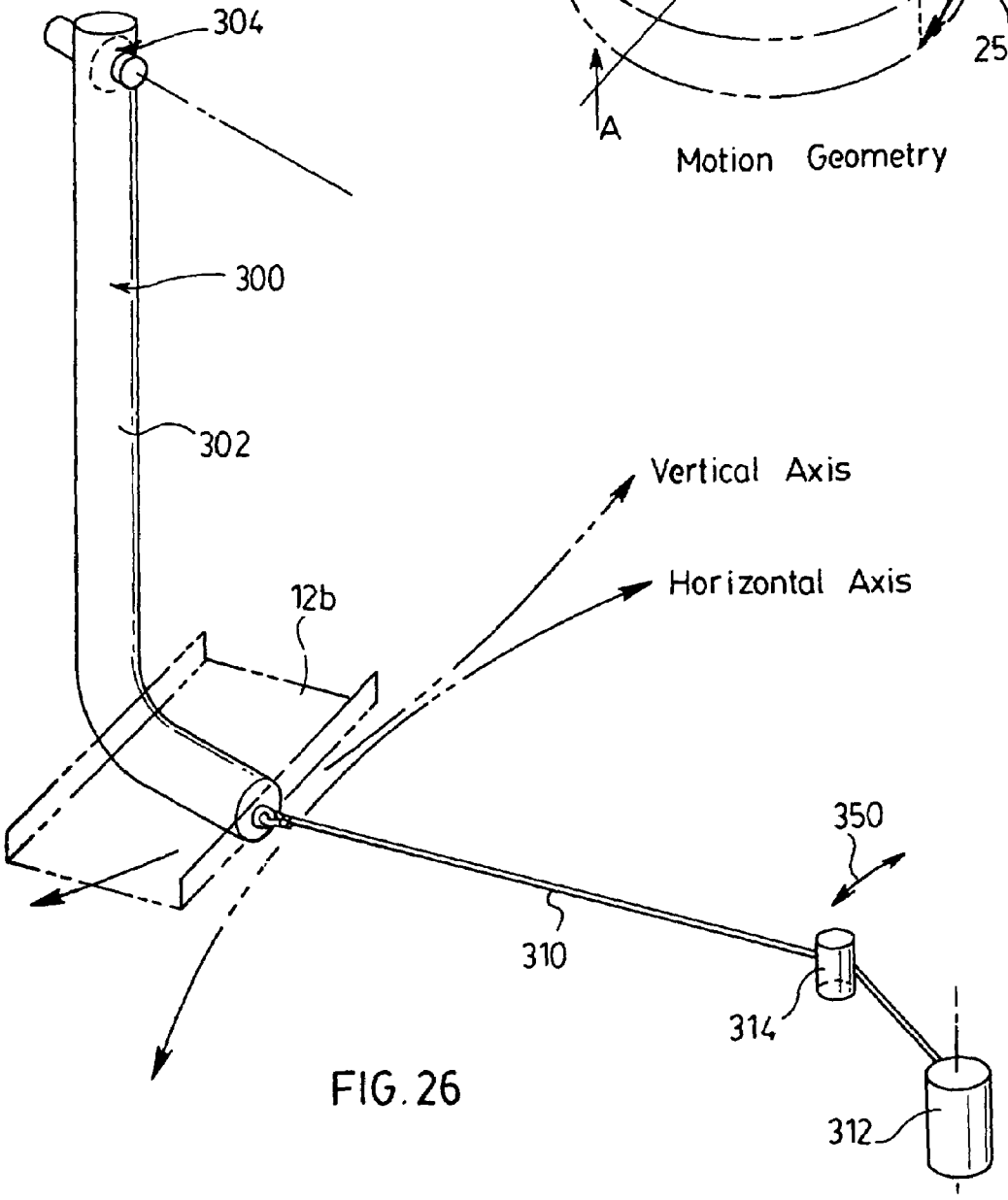

FIG. 26

EX2011
Woodway USA, Inc.
IPR2023-00849

FIG. 28

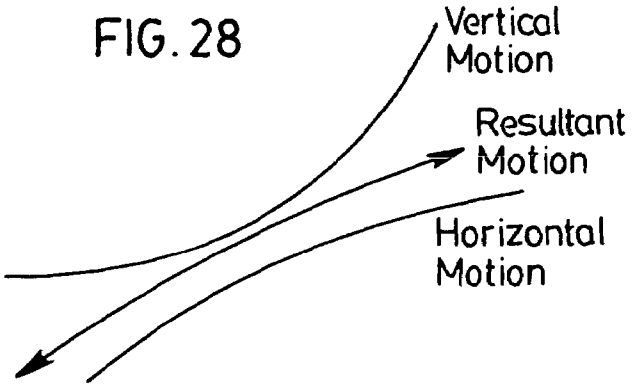

FIG. 27

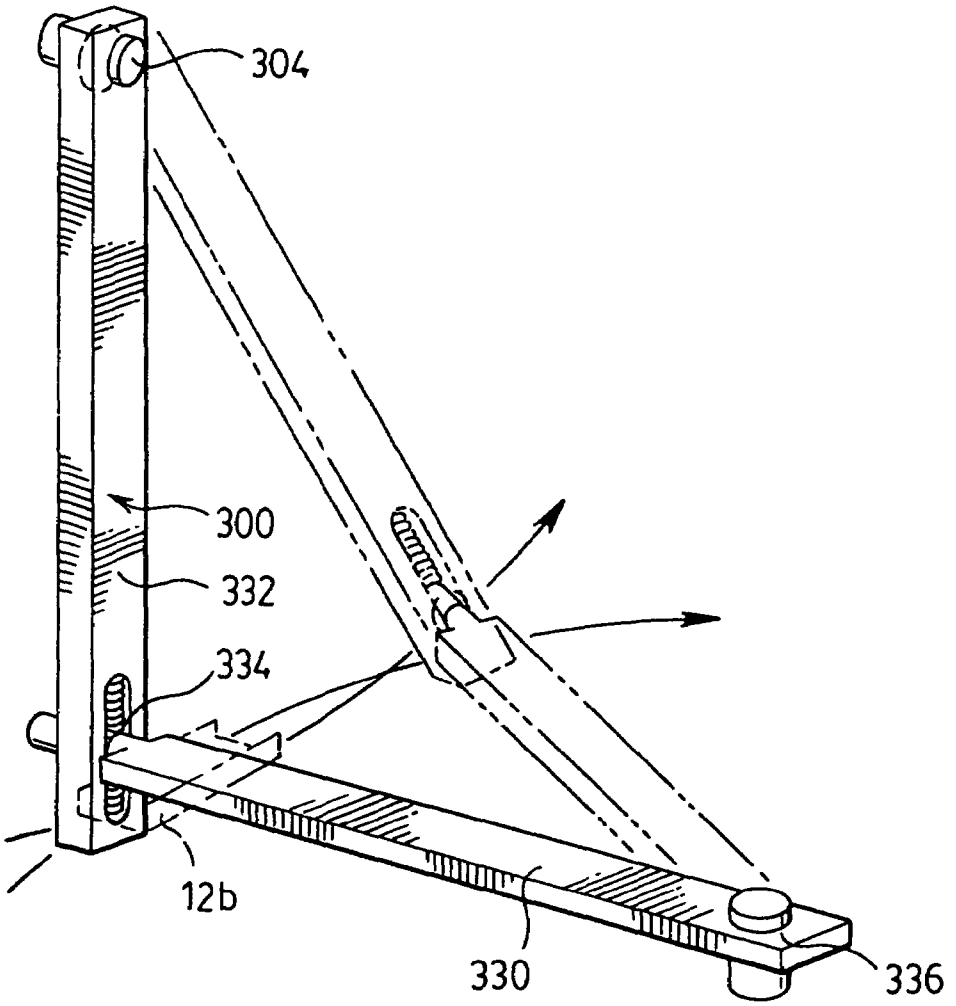

EX2011
Woodway USA, Inc.
IPR2023-00849

EXERCISE APPARATUS FOR SIMULATING SKATING MOVEMENT

RELATED APPLICATIONS

This application is a continuation-in-part of U.S. patent application Ser. No. 09/909,020, filed Jul. 20, 2001, and entitled "Exercise Apparatus for Simulating Skating Movement", and which issued to U.S. Pat. No. 6,786,850 on Sep. 7, 2004, and which claims the benefit under 35 U.S.C. 119(e) to U.S. provisional application Ser. No. 60/237,387 filed 4 Oct. 2000.

SCOPE OF THE INVENTION

The present invention relates to an exercise apparatus, and more particularly, an apparatus which in use is adapted to simulate an athlete's natural skating or roller blading movement, whereby the user's legs travel simultaneously in a lateral and rearward motion.

BACKGROUND OF THE INVENTION

Exercise apparatus which simulate walking, running and stair climbing are well known. Running and walking exercise apparatus typically comprise an inclined moving belt or treadmill upon which the user walks or runs. Stair climbing or stepping apparatus typically include a pair of hinged pedals upon which a user stands, and in which the pedals are moved up and down by the user shifting his or her weight to simulate stair climbing movement. While conventional exercise apparatus achieve the exercise and movement of the biceps femoris muscle, they are poorly suited to provide toning and exercise the remaining leg muscles used in skating, such as abductors and adductor muscles, the gastrocnemius muscle, the soleusmuscle the gracilis muscle and/or the sartorius muscle.

In an effort to provide an exercise apparatus better adapted to exercise muscles used in skating, U.S. Pat. No. 5,718,658 to Miller et al describes a skate training apparatus which includes a pair of cantilevered support arms which are adapted to support a user's legs in lateral movement. Similarly, U.S. Pat. No. 6,234,935 to Chu describes a skating exercise machine which is adapted to simulate skating movement by the use of a pair of cantilevered supports geared so as to move in an arcuate plane. The exercise apparatus of Chu and Miller, however, suffer the disadvantage in that in their operation, the user's feet are maintained in a generally forward oriented position while moving about a lateral horizontal arc. In contrast, in roller blading or ice skating, an individual typically performs a skating stride whereby the position of each foot during each stride moves so as to turn outwardly, to provide an increased thrust force.

Heretofore, conventional skate training apparatus suffer the further disadvantage in that they are poorly suited to mimic the forward motion achieved in skating movement. In particular, as prior art skating devices are adapted to provide lateral movement substantially in a horizontal plane, conventional skating exercise apparatus fail to account for the change in leg and foot position experienced by a skater during actual forward movement. Furthermore, conventional skating exercise devices which operate to move the user's leg only in a horizontal plane as the user's leg moves outwardly, may result in increased stressing on the user's Achilles and/or fibularis tendons.

Conventional skating exercise devices suffer a further disadvantage in that their complex design makes manufacture difficult, and the cantilevered arrangement of the user supporting pedals may be susceptible to premature wear and failure.

SUMMARY OF THE INVENTION

It is an object of the present invention to provide an exercise apparatus which, in use, permits toning and exercise to a wide variety of leg muscles, including one or more of the biceps femoris muscle, the gracilis muscle, the sartorius muscle, the gastrocnemius muscle and/or the soleus muscle.

Another object of the invention is to provide exercise apparatus which is designed to simulate an athlete's natural ice skating or roller blade movement during forward motion.

Another object of the invention is to provide an exercise apparatus which in use, imparts a lateral and rearward movement to a user's legs, while producing minimal stresses on the Achilles and/or Fibularis tendons.

Another object of the invention is to provide an ice or roller blade skating simulating apparatus which, in use, is adapted to guide a user's foot reciprocally in downwardly and outward or rearwardly curving movement so as to better simulate the forward gliding motion achieved in skating.

A further object of the invention is to provide a simplified exercise apparatus which may be easily and economically manufactured, and which in use provides to a user a leg motion which approximates the motion performed by ice skating.

Another object of the invention is to provide a robust exercise apparatus which is adapted to support a user's feet in movement during a natural skating motion.

The present invention provides an exercise apparatus used to simulate skating or roller blading movement in a user. The apparatus includes a pair of pedals adapted to support the foot of a user standing thereon in simulated skating movement. Each pedal may be coupled to or provided as part of an associated shuttle, which is movable along or by one or more respective guide assemblies adapted to guide the pedals and user's feet in a downwardly and/or rearwardly curving movement.

In one embodiment, the guide assembly includes a rail assembly which includes one or more rails having rail portions which curve away from each other. Each rail portion extends from a respective proximate forwardmost end, outwardly and rearwardly. More preferably, the curved rail portion of each of the rail assemblies is provided in a substantially mirror arrangement and curve downwardly from their respective forwardmost ends so as to slope downwardly and rearwardly to a lowermost distal portion. The slope of the rail assemblies may be constant along their length, or alternately may vary in degree between the proximate and distal portions.

A guide member or mechanism may be provided to assist in positioning and/or maintaining the shuttles in sliding movement along each guide assembly. More preferably, the guide member limits movement of the shuttles in reciprocal sliding movement along an associated rail assembly so as to guide the feet of the user in skating or roller blade movement. A resistance mechanism may also be provided to enable the user to vary the resistance to which the shuttles move along the rails as, for example, to provide a workout of increased or decreased difficulty.

In another embodiment, the guide assembly used to support and/or limit the pedals in movement along a respective downward and/or rearwardly curving path includes a pair of cantilevered support or swing arms. The swing arms

EX2011
Woodway USA, Inc.
IPR2023-00849

are coupled to either a respective individual or a single common pivot. In one possible construction, each swing arm may, for example, consist of a rigid metal or composite bar which has an elongate length selected at between about 0.5 to 1 meter. Each swing arm is positioned so that a forward end of each swing arm is movable from a forward proximal position where the swing arm extends generally forwardly from the pivot, and is rotatable in a limited arcuate movement rearwardly outwardly therefrom. A shuttle supporting an associated pedal is coupled towards the forwardmost end of each respective swing arm. Although not essential, most preferably individual pedals are pivotally secured to an associated shuttle so as to be pivotable relative to the forwardmost end of the swing arms as the swing arms are rotated about the pivot or their respective pivots. The location of the pivots towards a rearward portion of the skating apparatus and more preferably rearwardly of a user standing on the pedals in use of the apparatus, enables the pedals to be reciprocally moved along respective predetermined paths of movement which curve outwardly and rearwardly away from each other.

To achieve downward curving movement of each pedal in use of the apparatus, in one construction the swing arms are pivotally mounted in an orientation oriented so that each swing arm is inclined in the front to back orientation of the skating machine. Preferably each swing arm is mounted so as to incline upwardly in the forward direction at an inclined angle of between about 5° and 40° and more preferably about 10° and 25° when the forwardmost end of the swing arm is moved to a forwardmost position. In an alternate construction, the shuttles may be mounted to each swing arm on a helically threaded mount or post. The helical threads of the shuttle post are used to threadedly engage a complementary threaded socket formed in or coupled to the swing arm. In this construction, pivotal movement of the swing arms in use of the exercise apparatus produces relative twisting movement of the helical threads of the post and socket. This relative movement in turn vertically raises or lowers the shuttles and pedals relative to each swing arm as it pivots. Again, a resistance mechanism and/or a linkage may be provided to permit return movement of each shuttle to the forwardmost position, as the other shuttle is moved.

In another embodiment, the apparatus may include a guide assembly for guiding the pedals in a rearwardly outward and downward curving movement which includes of a pair of outwardly and rearwardly extending support arms. Most preferably, the support arms extend rearwardly and outwardly from a forward axial center position of the skating machine at a height selected between about 0.4 and 1.4 meters above the ground. A rocker arm assembly suspended from each support arm in turn is used to pivotally support an associated shuttle. The rocker arm assemblies are mounted so as to be pivotally coupled to the respective support arm so as to extend vertically therefrom. An associated shuttle used to support a pedal is in turn mounted to the lower end of each rocker arm. More preferably, the shuttles are pivotally secured to an end portion of a respective rocker arm which is remote from the associated support arm. In this construction, the pivotal movement of the rocker arm relative to the support arms results in the downwardly curving movement of the pedals along a respective predetermined path from a raised forward position, rearwardly outward to a lower distal position, such that each shuttle path curves downwardly and rearwardly outward in a mirror arrangement away from the other.

In a further embodiment, the guide assembly used to mount and guide the foot pedals and/or shuttles in rearwardly and/or downwardly curving movement could, for example, comprise a rigid support which is journaled in part about a spherical joint. In one simplified construction, the guide assembly includes a pair of J-shaped steel frame members mounted symmetrically in a mirror arrangement to each side of the machine. Each J-shaped frame member is suspended at its upper end by a spherical bearing, and mounts a respective one of the shuttles at its lower end. A tensioning wire or cable coupled to the lower end of each J-shaped member is used to restrict movement of both the lower end of each frame member and the shuttle supported thereby in arcuate movement as the frame member is moved about the spherical bearing. More preferably, the tensioning wire most preferably extends in the generally horizontal orientation and is secured at one of its ends to the lower end of the J-shaped frame member, and at its other end towards a rearward pivot point spaced towards a rearward central portion of the skating machine, and which more preferably locates substantially rearward of a user in use of the apparatus.

In an alternate possible construction, the wire may be replaced by a second rigid horizontal frame member which extends in generally the same horizontal orientation as the tensioning wire. In such a construction the horizontal frame member may be mounted at each of its ends by spherical joints. It is to be appreciated that this construction enables the end of the support member and shuttle to move along a path of movement extending from a forwardmost raised position and which curves downwardly and rearwardly to a lower position.

In one aspect, the present invention resides in a skating exercise apparatus for simulating skating or roller blading movement in a user, said apparatus including,

a pair of shuttles, each of said shuttles including a frame for supporting a foot of said user standing in a generally forward facing position thereon,

a pair of guide assemblies, each guide assembly supporting a respective one of said shuttles in reciprocal movement along a predetermined path, said predetermined paths extending in a direction away from the other in a generally mirror arrangement from raised proximal upper position and curving downwardly and/or rearwardly to a lower distal position,

and whereby alternating reciprocal movement of said shuttles along said predetermined path moves the feet of a user thereon substantially in skating or roller blading movement.

More preferably, in said distal position said pedal is repositioned in an orientation generally transverse to said direction of said predetermined path at an angle of between about 15° and 30° relative to horizontal to position the toes of said user's foot thereon.

In another aspect, the present invention resides in an ice skating exercise apparatus comprising,

a pair of shuttles, each for movably supporting a foot of a user standing in a generally forward facing position thereon,

a guide assembly,

said guide assembly supporting and limiting each said shuttles in movement along a respective predetermined path, said predetermined paths oriented in a substantially mirror arrangement and each extending in a direction away from the other from a generally adjacent raised proximal upper end portion and curving downwardly and rearwardly to a lower distal end portion,

EX2011
Woodway USA, Inc.
IPR2023-00849

whereby the movement of said shuttles along said associated predetermined path substantially simulates the user's foot movement during skating.

In a further aspect, the present invention resides in an ice skating or roller blading exercise apparatus,

a pair of shuttles, each of said shuttles including a frame for movably supporting a foot of a user standing in a generally forward facing position thereon,

a guide assembly limiting movement of said shuttles in reciprocal movement along a respective predetermined path, each of said predetermined paths extending in a direction away from the other from a respective forward proximal end portion and curving rearwardly to a respective lower distal end portion,

and whereby movement of said shuttles along said associated predetermined path moves the user's feet in simulated skating or roller blading movement.

In another aspect, the present invention resides in an exercise apparatus for simulating skating or roller blading movement in a user, said apparatus including,

a pair of shuttles, each of said shuttles including a frame and for supporting a foot of said user in a generally forward facing position thereon, and a guiding mechanism,

a pair of guide rail assemblies, each said guide rail assembly extending in a direction away from the other in a substantially mirror arrangement from raised proximal upper ends and curving downwardly and rearwardly to a lower distal end portion,

each said guiding mechanism guiding said associated shuttle in movement along an associated one of said rail assemblies between the proximal end and distal end portion,

and whereby alternating reciprocal movement of said shuttles along said associated rail assemblies moves the feet of a user thereon substantially in skating or roller blading movement.

In another aspect, the present invention resides in an ice skating exercise apparatus comprising,

at least one pair of guide rails oriented in a substantially mirror arrangement and each extending from a substantially adjacent raised proximal upper end portion and curving downwardly and rearwardly to a lower distal end portion,

a pair of shuttles, each for movably supporting a foot of a user thereon and including a frame and a guide assembly for retaining said shuttle in sliding movement along an associated one of said pair of rails between the proximal end portion and the distal end portion, and

whereby the sliding movement of said shuttles along said associated pair of rails substantially simulates the user's foot movement during skating.

In a further aspect, the present invention resides in an ice skating or roller blading exercise apparatus,

a pair of shuttles, each of said shuttles including a frame for movably supporting a foot of a user therein, and a guiding mechanism,

a pair of guide rail assemblies, each said guide rail assembly extending in a direction away from the other from a respective forward proximal end and curving rearwardly to a respective lower distal end portion,

each said guiding mechanism guiding said associated shuttle in movement along an associated one of said rail assemblies between the proximal end and distal end portion,

and whereby movement of said shuttles along said associated rail assemblies moves the user's feet in simulated skating or roller blading movement.

In yet another aspect, the present invention resides in a method of using a skating exercise apparatus to simulate skating or roller blading movement in a user, said apparatus including,

a pair of shuttles, each of said shuttles supporting a foot of said user standing thereon,

a pair of guide assemblies, each guide assembly supporting and limiting an associated one of said shuttles in reciprocal movement along a respective associated predetermined path, and wherein said shuttles are movable along said associated predetermined path in a direction away from the other in a generally mirror arrangement from raised proximal upper position and curving downwardly and/or rearwardly to a lower distal position,

wherein, with said user standing with each foot on an associates shuttle in a generally forward facing position, said user pushing a first said foot against said associated shuttle so as to move therewith along said associated predetermined path from said proximal upper position to said lower distal position, and thereafter pushing the second other said foot against said associated shuttle to move therewith along said associated predetermined path from said proximal upper position to said lower distal position,

and whereby alternating reciprocal movement of said user's feet with said associated shuttles along said associated predetermined paths moves the feet of a user thereon in generally simulating skating or roller blading movement.

BRIEF DESCRIPTION OF THE DRAWINGS

Reference is now made to the following detailed description taken together with the accompanying drawings in which:

FIGS. **1** and **2** illustrate schematically an exercise apparatus in accordance with a preferred embodiment of the invention;

FIGS. **3** and **4** show perspective side views of the apparatus of FIG. **1** with the cowling removed and a user thereon;

FIGS. **5** illustrates schematically the tensioning mechanism and cable pulley arrangement used in the exercise apparatus of FIG. **1**;

FIG. **6** shows an enlarged partial exploded view of the cable pulley arrangement shown in FIG. **5**;

FIG. **7** shows a partial perspective view of the right side of the shuttle and rail assembly of FIG. **3**;

FIG. **8** shows a schematic side view of the shuttle and rail assembly of FIG. **7**;

FIG. **9** illustrates schematically a partial front view of the shuttle and rail assembly for use with the apparatus of FIG. **1** in accordance with a second embodiment of the invention;

FIG. **10** illustrates an enlarged schematic view of a guide mechanism used in securing a shuttle to a guide rail assembly in accordance with a further embodiment of the invention;

FIG. **11** shows a perspective view of an exercise apparatus in accordance with a further embodiment of the invention;

FIG. **12** illustrates a schematic partially cutaway view of a torque converter for use in the exercise apparatus of FIG. **11**;

FIGS. **13** to **15** illustrate one-way clutch constructions to be used with the torque converter of FIG. **12**;

FIG. **16** illustrates an enlarged schematic view showing the attachment of a pivot arm to one of rocker arms used in the apparatus of FIG. **11**;

FIG. **17** shows schematically a side view of the crank mechanism **158** used to actuate the pivot arms in the apparatus of FIG. **11**;

EX2011
Woodway USA, Inc.
IPR2023-00849

FIG. **18** shows a schematic view of an exercise apparatus in accordance with a further embodiment of the invention;

FIG. **19** shows a schematic side view of the exercise apparatus of FIG. **18**;

FIG. **20** illustrates schematically a preferred shuttle and foot pedal mount used in the exercise apparatus of FIG. **18**;

FIG. **21** illustrates the geometric path of movement of the foot pedals using the exercise apparatus of FIG. **18**;

FIGS. **22***a* and **22***b* illustrate schematically a hydraulic clutch mechanism used for providing resistance in the apparatus of FIG. **18**;

FIG. **23** illustrates an alternate foot pedal/shuttle mounting construction for use with an apparatus in accordance with a further embodiment of the invention;

FIG. **24** illustrates a modified shuttle assembly for use with the apparatus of FIG. **23**;

FIG. **25** illustrates the geometric path of movement of the foot pedals in use of the apparatus of FIG. **23**;

FIG. **26** illustrates schematically an exercise apparatus in accordance with a further embodiment of the invention;

FIG. **27** illustrates an exercise apparatus in accordance with another embodiment of the invention; and

FIG. **28** illustrates the geometric path of movement of the foot pedals of the apparatus of FIGS. **26** and **27**.

DETAILED DESCRIPTION OF THE PREFERRED EMBODIMENT

FIG. **1** illustrates an exercise apparatus **10** which includes a pair of movable pedals **12***a*,**12***b* which, as will be described, are adapted to provide a user **8** (FIG. **2**) with an exercise workout which simulates an athlete's movement when ice skating or roller blading. The apparatus **10** is shown as a free standing unit and includes a base **14**, a handle assembly **16** and a microprocessor control and display **18**. The microprocessor control and display **18** permits the user **8** to select from a variety of stored exercise programs which simulate skating or roller blading workout activities. The control display **18** is mounted to an uppermost end of the handle **16** and in addition to activating a selected exercise program, includes a series of controls **19** which, as will be described, provide signals to vary the tension on the pedals **12***a*,**12***b* and/or select predetermined computerized exercise workouts.

FIG. **1** shows best the apparatus **10** as being substantially symmetrical about a central vertical plane A-A_1 and which extends in a front-to-back direction of the apparatus **10**. The handle assembly **16** includes a pair of fixed laterally extending grips **17***a*,**17***b* secured to an upright support adjacent to the control panel **18**. The grips **17***a*,**17***b* Th extend laterally outward from the central plane A-A_1 of the apparatus **10**. It is to be appreciated that the configuration of the grips **17***a*,**17***b* is selected so that they maybe comfortably grasped by the user **8** to assist in his or her balancing on the exercise apparatus **10** standing in the forward facing position shown in FIG. **2** during its use. In an alternate embodiment, a pair of movable handles (not shown) could be substituted to provide the user **8** with an upper body workout.

The base **14** has a size selected to provide the apparatus **10** with sufficient stability to support the user **8** standing thereon in a forward facing position in using the apparatus **10** as part of a gym or health club exercise routine. While FIGS. **1** and **2** illustrate the apparatus **10** with a covering cowling **20** in place, and which provides the apparatus **10** with a more aesthetically pleasing appearance, FIGS. **3** and **4** show best the apparatus **10** with the cowling removed for increased clarity. A tubular steel support frame **21**, dynamotor **22** and two guide tracks **24***a*,**24***b* are housed within the cowling **20** and form part of the base **14**.

FIGS. **3**, **4**, **7** and **8** show the guide tracks **24***a*,**24***b* best as each including a pair of parallel spaced, tubular steel rails **26**,**26'**. The rails **26**,**26'** are bent such that each guide track **24***a*,**24***b* curves outwardly and rearwardly from respective adjacent proximal ends **25***a*,**25***b* to a distal end **27***a*,**27***b*. Each of the pairs of rails **26**,**26'** is joined and supported at the proximal inner ends **25***a*,**25***b* of each track **24***a*,**24***b* by a steel inner vertical support **28**, and at their distal ends **27***a*,**27***b* by a steel outer vertical support **30**. The height of the supports **28** are most preferably selected greater than that of the vertical support **30** such that the guide tacks **24***a*,**24***b* each slope downwardly from their proximal ends **25***a*,**25***b* towards the distal ends **18***a*,**18***b*. Most preferably, the guide tracks **24***a*,**24***b* have the identical mirror construction and extend from the mid-plane A-A_1 (FIG. **1**) of the apparatus **10**, curving outwardly therefrom and extending rearwardly downward in opposing directions to the respective distal ends **27***a*,**27***b*. As seen best in FIG. **8**, although not essential, most preferably the degree of downward curvature of the tracks **24***a*,**24***b* gradually decreases in the direction away from the plane A-A_1.

The pedals **12***a*,**12***b* are formed as a flat metal plate sized to support, respectively, the right and left feet of the user **8**. The pedals **12***a*,**12***b* are shown best in FIGS. **4** and **7** as being coupled to a respective shuttle **32***a*,**32***b*, and which are each movable along an associated guide track **24***a*,**24***b* to provide the user **8** with the desired movement. The pedals **12***a*,**12***b* are mounted so as to extend upwardly through a corresponding slit **34***a*,**34***b* (FIG. **1**) formed in the cowling **20**. It is to be appreciated that the slits **34***a*,**34***b* have a curvature corresponding to that of the tracks **24***a*,**24***b*, so as to permit the substantially unhindered movement of the shuttles **32***a*, **32***b* along each associated track **24***a*,**24***b*. Although not essential, straps (not shown) may optionally be provided to assist in maintaining the user's **8** feet in the desired position on the pedals **12***a*,**12***b*.

FIGS. **7** and **8** show best the construction of the shuttle **32***a*, the shuttle **32***b* having the identical construction. The shuttles **32** include a metal frame **40** which spans across the respective pair of rails **26**,**26'** forming each track **24***a*,**24***b*. The frame **40** includes a pair of distal-most vertical pedal support members **42** which are oriented closest to the distal ends **27***a*,**27***b* of the tracks **24***a*,**24***b*, respectively, and a pair of proximal-most vertical pedal support members **44** which are spaced closest to the proximal track ends **25***a*,**25***b*. As shown best in FIG. **8**, the members **42** have a vertical height selected greater than that of the member **44**. Most preferably, the height of the members **42** is chosen relative to that of the members **44** such that the pedal **12** supported thereby assumes an orientation with its planar upper surface **46** (FIG. **8**) positioned in an orientation inclined at between about 0 and about ±15° relative to the horizontal when the shuttles **32** are moved along the associated tracks **24** to a position substantially adjacent to the proximal end **25** shown by arrow **50**. Furthermore, as the shuttles **32** move adjacent to the distal end **27** of each associated guide track **24** to the position shown by arrow **52**, the increased height of the pedal support members **42** results in the pedal **12** tilting forwardly so that its upper surface **46** assumes an orientation inclined at between about 15 and 50°, and more preferably about 30°.

It is to be further appreciated that as the frame **40** moves along its associated guide track **24** towards the distal end **27** in the direction of arrow **56**, the orientation of the pedals **12***a*,**12***b* rotate with the curvature of the rails **26**,**26'**, moving

EX2011
Woodway USA, Inc.
IPR2023-00849

from a generally forward orientation when the shuttle **32***a*, **32***b* coupled thereto is spaced adjacent to the proximal end **25**, and a position rotated therefrom in a general outward facing orientation when the shuttles **32** are moved to the track distal ends **27**.

FIGS. **7** and **8** show best each shuttle **32** as including a number of guide wheels identified generally as **62**. The guide wheels **62** are rotatably secured to the frame **40** for rolling movement along the associated guide track **24**. Most preferably, the shuttle **32** includes two pairs of load bearing guide wheels **62***a,b* and **62***c,d* (FIG. **7**) which engage and roll along an uppermost surface of the associated guide rails **26**,**26'**, respectively. One and preferably at least a pair of guide wheels **62***e*,**62***f* (FIG. **8**) are positioned beneath a corresponding load bearing wheel **62***a*,**62***b* of the shuttle **32**. The wheels **62***e*,**62***f* are located in a position engaging an underside of the guide rail **26** to prevent the shuttle **32** from being raised therefrom. Similarly, pairs of horizontal locating guide wheels **62***g*,**62***h*,**62***i*,**62***j* (FIG. **7**) engage the inside facing surfaces of the respective rails **26**,**26'** to prevent the lateral movement of the shuttle **32** from the track **24** and maintain its correct orientation thereon. Although not essential, the guide wheels **62** are most preferably provided with a generally concave peripheral surface **64** (FIG. **8**), having an internal curvature corresponding to the circumferential curvature of each tubular rail **26**,**26'**.

Most preferably, each of the shuttles **32***a*,**32***b* are independently movable relative to each other against the tension of a return cable **70** (FIG. **3**). As shown best in FIGS. **3** to **6**, the tensioning cables **70** consist of flexible steel aircraft cable coupled to a tensioning mechanism **72** operating in conjunction with the dynamotor **22**. The tensioning mechanism **72** is shown best in FIG. **5** as including a fly wheel **74** which is rotatable about an axle **76**, a tensioning strap **78**, which is provided in contact with a circumferential periphery of the fly wheel **74**, and a caming motor **80**. The caming motor **80** is powered by the dynamotor **22** and operates in response to signals received from the controller **18**. Through the controller **18**, the motor **80** is operated to selectively increase or decrease the friction contact between the tensioning strap **78** and the fly wheel **74**, to produce a corresponding increase or decrease in the apparatus resistance.

As shown best in FIGS. **5** and **6**, each of the tensioning cables **70** are secured at one end to a respective shuttle frame **40** extending about a pulley **82** and being wound about the periphery of an associated cylindrical spool ratchet **84***a*,**84***b*. The spool ratchets **84** are each provided with a through opening **86** defined by a radially extending rack **88**. The spool ratchets **84***a*,**84***b* are journaled for rotation in one common direction about a chain drive axle **90** which has secured at its end a toothed sprocket **92**. As shown in FIG. **6**, a one-way rotary bushing **94** is secured to the chain drive axle **90** for selective engagement with the rack **88** of each spool **84**. The rotary bushings **94** are each provided with a pair of radially opposed spring biased cams **96***a*,**96***b* which are adapted to engage the teeth of the rack **88** only in the forward movement of the axle **90** for rotation therewith, while permitting the ratchet spools **84** to rotate relative thereto on return movement in the opposite direction. A drive chain **98** extends about the tooth sprocket **92** and a drive sprocket **100** coupled to the fly wheel axle **76**, whereby rotation of the axle **90** and sprocket **92** acts to rotate the fly wheel **74** and provide power to the dynamotor **22**.

A pair of elastomeric return cords or shock cords **102** are shown in FIG. **5** as being secured at one end to the apparatus frame **21**, and at their other end to an outer periphery of an associated spool ratchet **84**. It is to be appreciated that the resiliency of the elastomeric cords **102** act to pull the spool ratchet **84** to a fully returned position, whereby the return cable **70** is wound fully about the periphery of the ratchet **84**, resulting in the shuttle **32** coupled thereto moving to a start position adjacent the axis $A\text{-}A_1$.

In operation, the user **8** stands on the apparatus **10** grasping the handle grips **17***a*,**17***b* with his feet facing forward and resting on the pedals **12***a*,**12***b* in the manner shown in FIG. **2**. The controller **18** is then activated by the user **8** to select a preprogrammed workout stored therein, whereby the controller **18** will provide a set of program signals to the motor **80** to adjust the pressure applied to the flywheel **74** by the tensioning strap **78**.

To initiate the exercise workout, the user **8** pushes outwardly and rearwardly with the right foot **110** (FIG. **2**) on the right pedal **12**a to start skating movement. As the user's foot **110** moves away from the plane $A\text{-}A_1$, the shuttle **32***a* travels along the track **24***a* towards its distal end **27***a*. As the pedal **12***a* moves away from the start position adjacent the plane $A\text{-}A_1$, its upper surface **46** begins to tilt along its lateral width W (FIG. **5**) forwardly in the direction of the rail **27**, pivoting about a horizontal axis, as it travels towards the distal end **27***a* of the tack **24***a*. Furthermore, as the shuttles **32***a*,**32***b* each travel along the respective tacks **24***a*,**24***b*, the pedals **12***a*,**12***b* rotate with the curvature of the rails **26**,**26'**. As a result, the user's leg is rotated so that the toes of the user are oriented to face outwardly in a position generally transverse to both the tack **24***a*,**24***b* length and path of shuttle **32***a*,**32***b* movement as each leg is extended rearwardly. Although not essential, more preferably as the user's leg is rotated and extended, the pedals **12***a*,**12***b* are repositioned with their longitudinal length L (FIG. **1**) oriented generally transverse to the path of shuttle movement. More preferably, as each pedal **12***a*,**12***b* moves rearwardly to the distal ends **27***a*,**27***b*, the upper surfaces of the pedals **12***a*,**12***b* incline downward along their

As the shuttle **32***a* moves towards the distal end **27***a* of the track **24***a*, the tensioning cable **70** unwinds from the spool **84** and imparts a rotational force on the spool ratchet **84**. In addition to stretching and causing the return cord **102** to wind about the spool ratchet **84**, the movement of the spool ratchet **84** results in the engagement of the rack **88** with the cams **96** on the periphery of the rotary bushing **94**. The engagement between the cams **96** and rack **88** causes the bushing **94** and axle **90** to rotate with the spool **84** producing a corresponding rotation in the sprocket **92**, drive chain **98** and flywheel drive sprocket **100** against the friction of the tensioning strap **78**. The rotation of the drive chain **98** operates to rotate the fly wheel **74** about the axle **76** providing additional power to the controlling dynamotor **22**.

Following movement of the pedal **12***a* to the distal end **27***a* of track **24***a*, the user **8** shifts his weight onto the left foot **112** (FIG. **3**) to move the pedal **12***b* along the track **24***b* towards the distal end **27***b*. It is to be appreciated that the pedal **12***b* travels along the track **24** in the minor manner to that of pedal **12***a*.

Furthermore, as the user **8** shifts his weight onto pedal **12***b*, the return cable **70** which is coupled to the shuttle **32***a* is wound about spool ratchet **84** associated therewith by the return elasticity of the cord **102**. The winding of the cable **70** about the spool **84** draws the shuttle **32***a* in return movement along the track **24***a* to the start position adjacent to the axis $A\text{-}A_1$ and proximal end **25***a*. As indicated, with the return movement of the elastomeric cord **102** and the rewinding of the cable **70** about the spool ratchet **84**, the ratchet **84** rotates relative to the rotary bushing **94** without the engagement of cams **96** with the rack **88**. In this manner, the axle **90** and

EX2011
Woodway USA, Inc.
IPR2023-00849

drive sprocket **100** are driven in only one direction of rotation by the successive engagement of the spool ratchet **84** which is coupled to the return cable **70** secured to each of the two shuttles **32***a*,**32***b*.

The skating motion is thus simulated by the apparatus **10** with the user sequentially shifting his or her weight between the pedals **12***a*,**12***b*. In addition to more closely simulating a true skating motion, the rotational movement of the pedals **12***a*,**12***b* as they move along the guide tracks **24***a*,**24***b* optimizes the exercise of the user's 12 leg muscle groups, as the user shifts his weight between the pedals **12***a*,**12***b*.

Optionally, the apparatus **10** could be provided with a motorized lift (not shown) which could be selectively activated to raise or lower the proximal ends **25***a*,**25***b* of the tracks **24***a*, **24***b* at the plane A-A_1 relative to their distal end providing a more varied workout. Similarly, the control display **18** could be used to alter the length of maximum movement of the shuttles **32***a*,**32***b* along the tracks **24***a*,**24***b* to simulate different stride lengths and/or provide either variable or constant tension to the cables **70** as the shuttles **32***a*,**32***b* are moved.

FIG. **9** shows an alternate possible sled and pedal construction in accordance with a second embodiment of the invention and wherein like reference numerals are used to identify like components. In FIG. **9**, the pedals **12***a*,**12***b* are mounted to the respective shuttles **32***a*,**32***b* in a cantilevered arrangement. In particular, the pedals **12***a*,**12***b* are positioned so as to extend inwardly towards each other over the proximal-most shuttle supports **44**. It is believed that the pedal and shuttle configuration of FIG. **9** is advantageous in that it permits the full return of the pedals **12***a*,**12***b* to a position substantially aligned with the plane A-A_1. This configuration would advantageously simulate most closely, true skating movement where on skating in forward movement, a user's foot orients directly over the individuals center of mass.

Although the preferred embodiment illustrates the pedals **12***a*,**12***b* as being mounted to a wheeled shuttle **32** or trolley which travels along pairs of tubular guide rails **26**,**26'** the invention is not so limited and other assemblies for guiding movement of the pedals in outwardly rearward and/or downward curving movement may also be used. Similarly, although the detailed description describes the guiding mechanism used to maintain each shuttle **32***a*,**32***b* on its associated rail assembly **24***a*,**24***b* as comprising a series of spaced guide wheels **62**, other guide assemblies including, without restriction, the use of dovetail slide bearings, ball bearings, or the like, could also be used without departing from the spirit and scope of the invention. Other shuttle arrangements and guide configurations are also possible and will now become apparent. Reference may be had to FIG. **10** which illustrates one possible alternate shuttle guide assembly. In FIG. **10**, two pairs of slide bushings **120**,**122** are provided in place of the offset wheel construction shown in FIG. **3**. The slide bushings **120**,**122** are adapted to engage a single tubular steel rail **124** in longitudinal sliding movement therealong. The bushings **120**,**122** are secured to each other by a series of threaded screws **130** and are further provided with a curved slide surface **134**,**136**, respectively, having a profile selected complementary to the radius of curvature of the rail **124**.

While FIG. **3** illustrates the use of cables **70** to provide independent return movement of the shuttles **32**, the invention is not so limited. Chains or belts could be substituted for the cables **70** with adjustments made to the pulley arrangement. In a more economical construction, the shuttles **32** could be connected to each other for dependent movement, or alternately, the use of cables to provide return movement could be omitted in their entirety.

While the preferred embodiment of the invention discloses the tensioning mechanism as comprising a flywheel **74** and adjustable tensioning strap **78**, it is to be appreciated that other tensioning devices could also be used, including without restriction, weights or pressure stacks, fan resistant mechanisms and electromagnetic resistance mechanisms.

Although the detailed description of the invention describes the shuttle frame **40** as configured to incline in a forward direction as the shuttles **32** move rearwardly along the tracks **24**, the invention is not so limited. The shuttles **32** could include a platform which is maintained at a relatively constant angle relative to the horizontal as the shuttle **32** moves. Alternate shuttle frame configurations could also be used.

Similarly, while the use of elastomeric shock or bungee cords **102** are described as assisting in the return movement of the shuttles **32** and pedals **12** to the initial starting position, the shock cords **102** could be omitted in their entirety and the shuttles **32** moved in return movement through the exertions of the user **8** alone. Alternately, other return mechanisms, including, without limitation, resiliently extendable springs, could also be employed.

Although the Figures illustrate an exercise apparatus **10** in which the shuttles **32***a*,**32***b* move along a respective rail assembly **24***a*,**24***b*, which each comprise a pair of parallel curved rails **26**,**26'**, the rail assemblies **24** could each consist of either a single rail or three or more rails configured to guide a shuttle **32** associated therewith in the desired degree of arcuate movement. While the detailed description describes and illustrates the tracks **24***a*,**24***b* as curving downwardly rearward towards their respective distal ends **27***a*, **27***b*, other track configurations are also possible. For example, the tracks **24***a*,**24***b* could be formed either substantially flat, or the tracks **24***a*,**24***b* could slope rearwardly to the distal ends **27***a*,**27***b* at a constant angle.

Although the preferred embodiment of the invention describes the pedals **12***a*,**12***b* as being movable along a set of tubular steel rails **26**,**26'**, the invention is not so limited. It is to be appreciated that other constructions which do not incorporate a tubular frame **21** and/or guide tracks **24***a*,**24***b*, are also envisioned by the inventor and will now become apparent. By way of non-limiting example, FIG. **11** shows an alternate possible apparatus **10** which is adapted to simulate skating movement and wherein like reference numerals are used to identify like components. In the exercise apparatus **10** of FIG. **11**, a pair of foot pedals **12***a*,**12***b* are provided for supporting the feet of a user standing in a forward facing position thereon. As with the apparatus **10** shown in FIG. **1**, the apparatus **10** of FIG. **11** is symmetrical about its central mid-plane A-A_1.

In use, the apparatus **10** is adapted to supportingly move each foot of the user along respective predetermined paths which extend largely mirror arrangement about the plane A-A_1 from a respective raised proximal upper position curving downwardly and extend rearwardly outward to a lower distal moved position. The apparatus **10** includes a lower frame **148** which is adapted to rest on the floor. The frame **148** includes an axially forward positioned vertical support **149** which extends to a height of approximately one meter above the floor. A pair of support arms **152***a*,**152***b* are coupled to an upper end of the vertical support **149**. The support arms **152***a*,**152***b* extend in a mirror arrangement substantially horizontally and in an orientation angling rearwardly and outwardly relative to the mid-plane A-A_1. As shown best in FIG. **11**, a rocker arm assembly **150***a*,**150***b* is

EX2011
Woodway USA, Inc.
IPR2023-00849

pivotally suspended from an end portion of each support arm **152***a*,**152***b*, respectively. As will be described, the rocker arm assemblies **150***a*,**150***b* are used to mount a respective shuttle **32***a*,**32***b* which each in turn pivotally supports a respective pedal **12***a*,**12***b*.

The rocker arm assemblies **150***a*,**150***b* are provided to guide the pedals **12***a*,**12***b* in movement along a respective predetermined path which curves downwardly and extends rearwardly outward relative to the central mid-plane A-A_1 of the apparatus **10** without tracks.

As shown in FIG. **11**, the foot pedals **12***a*,**12***b* are pivotally mounted for movement relative to each shuttle **32***a*,**32***b*. A pivot arm **156***a*,**156***b* connected to a crank mechanism **158** (shown best in FIG. **17**) is used to impart pivoting movement on an associated rocker arm assembly **150***a*,**150***b*. In particular, as shown best in FIGS. **11** and **17**, each rocker arm assembly **150***a*,**150***b* consists of a pair of parallel spaced pivotal rod members **154***a*,**154'***a* and **154***b*, **154'***b* which are adapted to be pivoted in the outwardly rearward direction of the support arms **152***a*,**152***b*. The reciprocal pivoting movement of the rocker arm assemblies **150***a*,**150***b* enables movement of the shuttles **32***a*,**32***b* and pedals **12***a*,**12***b* along a respective predetermined path between a forward raised proximal position, when the shuttles **32***a*,**32***b* are moved closest to the mid-plane A-A_1, and which curves downwardly to a rearward lower distal position, as the shuttles **32***a*,**32***b* are moved rearwardly therefrom.

The pivot arms **156***a*,**156***b* are used to link the crank mechanism **158** to a respective rocker arm **154***a*,**154***b* to provide for the reciprocal return movement of the shuttles **32***a*,**32***b*. Furthermore, the pivoting movement of the pedals **12***a*,**12***b* relative to the shuttles **32***a*,**32***b* allows the user's foot to twist and point outwardly as each pedal **12***a*,**12***b* moves rearwardly and downward, to assist in maintaining the user's foot in a more natural neutral position as is or her leg is extended.

FIG. **16** shows a partial schematic illustration of the pivot arm **156** connection to each rocker arm **154**. Most preferably, the pivot arms **156** are adapted to be coupled at a number of vertically spaced locations to each rocker arm **154**, thereby permitting adjustment in the overall length of the path of pivotal movement of the shuttles **32***a*,**32***b* in reciprocal movement. FIG. **16** shows best one end of the pivot arm **156** as being pivotally secured to a slidable sleeve **188** by means of a rod end bearing **190**. The sleeve **188** is slidable in the direction of arrow **200** along a portion of the length of the rocker arm **154**, as for example to the position shown in phantom with reference to pivot arm **156'**. The rocker arm **154** further includes a number of spaced adjustment holes **192**. A locating pin **194** coupled to the sleeve **188** is resiliently biased by means of a helical spring **196** into engagement with a selected adjustment hole **192** to couple the pivot arm **156** at the desired location. It is to be appreciated, by raising or lowering the sleeve **188** relative to the rocker arm **154**, the degree of downward curving movement of the foot pedals **12***a*,**12***b* may be adjusted to better suit the skill of the user.

FIG. **17** shows the crank mechanism **158** as including a crank arm **170** which is driven in rotary movement by a driven chain or belt **172**. The drive belt **172** is in turn driven by means of a suitable torque converter **174** by way of a gear **204**. As shown in FIG. **12**, the torque converter **174** incorporates a stator **180** and one-way clutch mechanism **182** to maintain single directional rotation of the crank arm **170**. Possible suitable one-way clutch mechanisms **182** for unidirectional movement of the torque converter **174** are shown in FIGS. **13** to **15** as possibly comprising a roller one-way clutch (shown in FIG. **13**), a sprag clutch (shown in FIG. **14**) or a hydraulic-type clutch **182** of the type of FIG. **15**. The one-way clutch of FIG. **15** includes a segmented chamber **184** which is adapted to hold a suitable clutch fluid **186**. The segmented walls of the chamber **184** thus preventing or restricting rotational movement of the fluid **186** within the torque converter **174**. The crank arm **170** is provided at each end with a spherical bearing **202***a*,**202***b*. Each of the spherical bearings **202***a*, **202***b* are used to pivotally secure an end of the respective pivot arms **156***a*,**156***b* to upper and lower ends of the crank arm **170**. The belt **172** is used to translate the unidirectional rotational movement from the torque converter **174** via gear **204** to the crank arm **170** to effect its rotation. A weight **206** may further be provided as an inertia device to maintain momentum.

FIG. **18** shows an alternate possible construction for the apparatus **10** used to simulate skating movement in which like reference numerals are used to identify like components. In the apparatus of FIG. **10**, a pair of rigid steel swing arms **210***a* are provided to guide the user's feet in downwardly and rearwardly curving movement. Each of the swing arms **210***a*,**202***b* are mounted to a pivot **212**. Preferably, the pivot **212** is positioned along the mid-plane A-A_1 of the apparatus **10** towards a rearward location, such that the pivoting axis A_p—A_p locates rearwardly of a user in use of apparatus **10**. A shuttle **32***a*,**32***b* is secured towards a forwardmost end of each swing arm **210***a*,**210***b*, respectively. As with the earlier embodiments, each shuttle **32***a*,**32***b* supports a respective pedal **12***a*,**12***b* used to support the foot of a user in a generally forward facing position on the apparatus **10**. FIG. **18** further shows a flexible cable **70** as being used to couple the forward end portions of the swing arms **210***a*,**202***b* to each other in return reciprocal movement.

FIG. **18** further shows the apparatus as including a torque converter **222**. In a simplified construction, the torque converter **222** may comprise a hydraulic torque converter which includes a suitable fluid which as shown best in FIGS. **22***a* and **22***b* is selected to provide resistance as the pedals **12***a*,**12***b* are reciprocally moved. Other types of torque converts **222** including those described with reference to the embodiment shown in FIG. **11** may, however, also be used.

FIG. **20** shows a preferred shuttle mount for use with the left swing arm **210***b* of the apparatus **10** of FIG. **18**, the right swing arm **210***a* being identical. In particular, the pedal **12***b* is most preferably rotatable relative to the swing arm **210***b* to allow the repositioning of the user's foot and ankle in the neutral position as each pedal **12***b* is pivoted away from the plane A-A_1. In one simplified construction, the shuttle **32** includes a urethane pad **224** which permits angular deflection of the pedals **12***b* as the swing arm **210***b* is pivoted. In FIG. **20**, the urethane pad **224** is selected to permit not only the inclination of the pedal **12***b* in generally a direction of pedal movement laterally at an angle of between about 15 to 50° relative to the horizontal as the pedal moves outwardly rearward, but also with an angular deflection relative to the pedal length L (FIG. **19**), so that the pedal **12***b* tilts downward in the direction of its longitudinal length and outwardly generally transverse to the path of shuttle movement at an angle of up to 45°, and preferably 15 to 30° and more preferably about 25°. The downward tilting of the pedal **12***b* advantageously assists in pointing to the user's toes in a generally downward orientation as his or her leg is extended.

As shown best in the profile of FIG. **19**, in a simplified construction the pivot **212** is oriented in a rearwardly inclined position. As a result, when moved to a forward position so that the shuttles **32***a*,**32***b* are moved closest to the mid-plane A_1—A_1, the swing arms **210***a*,**202***b* are inclined

EX2011
Woodway USA, Inc.
IPR2023-00849

upwardly in the forward direction at an angle α which preferably is selected at between 5 and 35°, and more preferably about 30°. As shown in FIG. **21**, the forward inclination of the swing arms **210***a*,**202***b* permits movement of the foot pedals **12***a*,**12***b* to move along a respective predetermined rearwardly curving path **220***a*,**220***b* which slopes from a forward position downwardly and rearwardly to a rearward position. Most preferably, each swing arm has a length selected at between about 0.5 and 1.5 meters with the result that the predetermined paths **220***a*,**220***b* have an arcuate length of between about 0.75 and 3 meters. It is to be appreciated that with the apparatus **10** of FIG. **19**, the apparatus provides for outwardly rearward curving movement of the pedals **12***a*,**12***b*. By transferring the user's weights from pedal **12***a* to **12***b*, the user's feet are guided in reciprocal movement along respective predetermined paths extending away from each other in a generally mirror arrangement from raised proximal upper positions, so as to slope on a constant angle downwardly and rearwardly to a lower distal position.

Although FIG. **18** illustrates the apparatus **10** as incorporating a single pivot **212**, it is to be appreciated that in a less preferred construction, each of the swing antis **210***a*,**210***b* could be mounted to separate pivots, each spaced generally towards the axis-plane A-A_1 for downwardly and rearwardly curving movement.

FIG. **23** shows alternate possible construction for the swing arm **210***b*(swing arm **210***a* being identical) and shuttle **32***b* for use in the apparatus of FIG. **18**. In FIG. **23**, the shuttle **32***b* is provided with a helically threaded shaft **230**. The helically threaded shaft **230** is threadedly engaged wit a complementary internally threaded socket **232** formed in the forwardmost end of the swing arm **210***b*. The helical threads may be provided with a constant thread pitch or spacing along their length, but more preferably include a wider thread pitch towards an upper end of the shaft **230** It is to be appreciated that as the swing arm is moved about the pivot **212**, the placement of the user's foot on the pedal **12***b* results in the rotational movement of the pedal **12***b* and shaft **230** relative to the socket **232** and end of each swing arm **210***b*. The threaded engagement of the shaft **230** and socket **232** thus results in the pedal **12***b* moving vertically in the direction of arrows **240***a*,**240***b* relative to the swing arm **210***a*,**202***b* at different rates depending on the swing arm **210** position to achieve simultaneous downward and rearward curving movement of the user's foot as each swing arm **210***a*,**202***b* is pivoted from the position shown in phantom rearwardly from the plane A-A_1.

FIG. **24** shows a modified threaded mount for use with the construction shown in FIG. **23**. In a further possible construction, a belt drive **242** could be used to engage a toothed sprocket **244** to provide exaggerated vertical movement of the threaded shaft **230** in the direction of arrow **240** as each swing arm **210** is pivoted. The belt drive **242** may optionally be threadedly engaged with a corresponding tooth surface provided on the pivot **212**.

FIG. **25** illustrates schematically the geometry of movement of the pedals **12***a*,**12***b* along a respective arcuate path (shown by arrows **252***a*,**252***b*) relative to the mid-plane A-A_1 of the apparatus **10**. As shown, the swing arm **210** and shuttle **32** construction of FIG. **23** is adapted to effect movement of the pedals **12***a*,**12***b* in a mirror arrangement and reciprocally along the respective predetermined paths **252***a*,**52***b* from a respective raised position which is spaced forwardmost and proximate to each other, curving continuously rearwardly and downwardly in the direction of the arrows **250***a*,**250***b* to a lower rearward and outward position.

As with the construction shown in FIG. **20**, as each pedal **12***a*,**12***b* moves downwardly rearward, the pedal **12***a*,**12***b* tilts in their longitudinal direction transverse to the path of pedal movement to allow movement of the user's toe to point outwardly, and more preferably so as also to point downward. More preferably, the pedals **12***a*,**12***b* are adapted to simultaneously tilt lataerally forwardly concurrently with their outward rotation, as for example by inclusion of the urethane sleeve **224** (FIG. **20**) to assist in maintaining the user's foot in more of a neutral position, minimizing ankle strain.

FIGS. **26** and **27** illustrate a further embodiment of the invention in which like reference numerals are used to identify like components. Each of FIGS. **26** and **27** show in isolation a support member **300** which is adapted to support a left foot of a user. The support member **300** is for use with an apparatus frame (not shown) in supporting the left foot when the user stands standing in the forward facing position on the exercise apparatus. It is to be appreciated that an identical support structure is provided to support the user's right foot, and wherein left and right support members **300** are mounted symmetrically positioned about a central mid-axis of the exercise apparatus.

FIG. **26** illustrates the support member **300** as including a generally J-shaped steel tube **302**. The upper end of the tube **302** is mounted by means of a spherical bearing **304** to the apparatus frame (not shown) so as to be pivotal in approximately 360° movement thereabout. The foot pedal **12***b* is secured to the lower end of the J-shaped tube **302**. A tensioning cable **310** is coupled at one of its ends to the end of the tube **302**, and at the other end to an anchor shaft **312**. Optionally, a movable cam **314** maybe provided to permit adjustment in the pivot length of the bottom end of the tube **302**. The cam **314** is movable radially in the direction of arrows **350** in a selected number of positions. As is apparent, by moving the cam **314**, it is possible to vary the radius of curvature along which the path of the lower end of the J-shaped tube **302** moves.

FIG. **28** shows schematically the geometry of movement of the pedal **12***b* with the tube **302** of FIG. **26**. As shown best in FIG. **28**, a skating apparatus **10** incorporating the support **300** as shown in FIG. **26** permits a user to stand on the pedals (**12***b* shown) enabling the pedal **12***b* to move in a radially outwardly and downwardly path from a forward raised position to a lower rearward position. Although not shown, it is to be appreciated that an appropriate return member such as a spring or cable may be used to couple the lower ends of similarly mounted J-shaped members **300** mounted in a mirror arrangement to provide for reciprocal movement of a pair of pedals **12** along respective predetermined paths.

FIG. **27** shows an alternate possible support frame member **300** to that shown in FIG. **26**, wherein like reference numerals are used to identify like components. In place of the tensioning cable **310**, the construction of FIG. **27** incorporates a second rigid horizontal metal or composite bar **330**. The bar **330** is coupled at a first end to a vertical frame member **332** by way of a spherical joint **334**, and at its second other end to a further spherical joint **336**. As with the embodiment shown in FIG. **26**, the support member **300** is adapted to guide individual foot pedals (foot pedal **12***b* shown in phantom) along a predetermined path shown graphically in FIG. **28** from a raised proximal upper position and curving substantially continuously downwardly and rearwardly to a lower distal moved position. As with the embodiment shown in FIG. **20**, the pedal **12***b* may, for example, be mounted to guide assembly for pivoting movement along a urethane plastic or other rubber-type pad **224**

EX2011
Woodway USA, Inc.
IPR2023-00849

to accommodate for angular deflection and/or inclination as each pedal **12** is moved downwardly rearward.

Although the detailed description describes and illustrates a preferred apparatus construction, the invention is not so limited. Many variations and modifications will now appear to persons skilled in the art. For a definition of the invention reference may be had to the appended claims.

I claim:

1. A skating exercise apparatus for simulating skating or roller blading movement in a user, said apparatus extending generally in a front-to-back direction and including,

a pair of shuttles, each of said shuttles for supporting a foot of said user standing in a generally forward facing position thereon facing towards a front of the apparatus,

a pair of guide assemblies, each guide assembly supporting and limiting an associated one of said shuttles in reciprocal movement along a respective associated predetermined path, and wherein said shuttles are movable by said guide assembly along said associated predetermined path, each of said predetermined paths consisting of a path extending in a direction away from the other in a generally mirror arrangement about a central plane of the apparatus such that the paths do not substantially cross the central plane and extend from a respective raised proximal upper portion and curving rearwardly and extending downwardly to a lower distal portion,

and whereby each of the shuttles are alternating reciprocally movable along said associated predetermined paths with a foot of the user thereon from a respective raised proximal upper position with the shuttle being spaced towards the front of the apparatus, to a lower distal position wherein the shuttle is moved rearwardly therefrom, and wherein when a first one of said shuttles is positioned in said proximal upper position, the second other shuttle being positionable in the distal position to move the user's feet generally in simulated skating or roller blading movement.

2. The exercise apparatus of claim **1** wherein each said guide assembly includes a guide rail, said apparatus further including a guiding mechanism for guiding an associated shuttle in movement along the guide rail, the guiding mechanism having at least one wheel rotatably engaging the said guide rail for rolling movement therealong.

3. The exercise apparatus of claim **1** further including a return device for biasing the shuttles to an initial starting position spaced towards the proximal upper position.

4. The exercise apparatus of claim **3** wherein said return device is selected from a flexible wire cable, a resiliently extendable spring and a resiliently extendable shock cord.

5. The exercise apparatus of claim **1** further including a tensioning mechanism selectively operable to permit said user to vary resistance to the movement of said shuttles in at least one direction along said predetermined path.

6. The exercise apparatus as claimed in claim **1** wherein each of said guide assemblies comprise a pivotally movable elongated support arm extending from a respective rearward end to a forward end,

the associated one of said shuttles being mounted to the forward end of each support arm for pivotal movement relative thereto,

the rearward end of each support arm being mounted to a pivot joint for selective reciprocal rotational movement thereabout from a first position wherein said forward end is moved with said associated shuttle positioned at said raised upper position, and a second position wherein said associated shuttle is positioned in said lower distal position.

7. The exercise apparatus of claim **1** further including a pair of pedals being mounted to a respective shuttle and having a pedal surface sized to support a foot of said user standing thereon,

when said shuttle is in the lower distal position, said pedal surface in an orientation inclined substantially in a direction of said predetermined path relative to the horizontal, an angle at between about 15 and 50°, to support said user's foot thereon oriented in a generally outward sideways orientation.

8. The exercise apparatus of claim **7** wherein when said shuttle is in said upper position said pedal surface in an orientation inclined relative to the horizontal at an angle of between 0 and ±15°.

9. The exercise apparatus of claim **7** wherein said guide assemblies each comprise guide rails, the guide rails each including a rail portion which each curves in a mirror arrangement continuously downwardly and rearward from respective raised proximal upper end portions to lower distal end portions, and a tensioning mechanism selectively operable by said user to vary resistance to the movement of said shuttles in at least one direction along an associated one of said rail portions.

10. The exercise apparatus of claim **9** further including a return device for biasing the shuttles to an initial starting position spaced towards the proximal end portion of said associated guide rail.

11. The exercise apparatus as claimed in claim **7** wherein in said lower distal position said pedal is positioned in an orientation generally transverse to said direction of said predetermined path at an angle of between about 15° and 30° relative to horizontal to position the toes of said user's foot thereon in a generally downwardly extending orientation.

12. The exercise apparatus as claimed in claim **1** wherein each of said shuttles further includes a planar pedal surface, in the lower distal position the shuttle pedal surface is positioned in an orientation inclined generally in a forward direction of said apparatus at an angle inclined at between 15 and 50° relative to the horizontal.

13. The exercise apparatus as claimed in claim **12** wherein when the shuttle is in the upper position, the pedal surface is positioned in an orientation inclined at an angle relative to the horizontal at between 0 and ±15°.

14. The exercise apparatus as claimed in claim **13** wherein when the shuttle is in said lower distal position, said pedal surface is positioned in an orientation selected to align a foot of said user thereon generally transversely to said direction of said predetermined path and inclined at an angle of between about 15° and 30° relative to horizontal.

15. The exercise apparatus of claim **1** wherein each shuffle further includes a pedal having a pedal surface sized to support said user's foot thereon,

in the lower distal position the pedal surface inclined in a direction generally transverse to the direction of the predetermined path at an angle inclined relative to the horizontal for supporting said user's foot thereon with the toes pointing in a generally downwardly inclined orientation.

16. The exercise apparatus of claim **15** wherein in the lower distal position the pedal surface is inclined at an angle of between about 15 and 30°.

EX2011
Woodway USA, Inc.
IPR2023-00849

17. An exercise apparatus extending generally in a front-to-back direction and comprising,

a pair of shuttles, each for movably supporting a foot of a user standing in a generally forward facing position thereon facing towards a front of the apparatus and including a shuttle frame,

a guide assembly,

said guide assembly supporting and limiting each said shuttle in reciprocal movement along an associated predetermined path, said predetermined paths oriented in a substantially mirror arrangement and each extending in a direction away from the other such that the paths do not substantially cross a central plane and extend from a generally adjacent raised proximal upper end portion spaced towards the front of the apparatus, and curving continuously downwardly and rearwardly to a lower distal end portion rearwardly from the proximal upper end portion,

each of the shuttles being substantially restricted in movement along said associated predetermined path between a raised forwardmost position spaced towards the upper end portion and a lowered rearward position spaced towards the lower distal end portion, and wherein when a first one of said shuttles is positioned in said proximal upper position, the second other shuttle being positionable in the distal position to move the user's feet to substantially simulate a lateral motion of the user's foot movement during skating.

18. The exercise apparatus of claim 17 further including a return device for biasing the shuttles to an initial starting position adjacent the proximal end portion.

19. The exercise apparatus of claim 18 wherein said return device is selected from a resiliently extendable spring and a resiliently extendable shock cord.

20. The exercise apparatus of claim 17 further including a tensioning mechanism operable to permit said user to vary resistance to the movement of said shuttles in at least one direction along said predetermined path.

21. The exercise apparatus of claim 17 wherein each said shuttle further comprises,

a plate mounted to said frame and sized to substantially support at least part of one of said user's feet with said user standing thereon,

said frame including a proximal plate support spaced closest towards said proximal end portion of said associated predetermined path,

and a distal support spaced closest towards said distal end portion of said predetermined path,

said distal plate support extending vertically a distance greater than said proximal plate support whereby said plate is inclined forwardly as said shuttle moves along the associated predetermined path from the proximal end portion towards the distal end portion.

22. The exercise apparatus of claim 21 wherein said proximal plate support and said distal plate support extend by a distance selected so that said plate assumes an orientation inclined at between 0 and ±15° when the shuttle is located adjacent to the proximal end portion.

23. The exercise apparatus as claimed in claim 17 wherein said guide assembly comprises a pair of guide rails which continuously curve downward and rearwardly from proximatemost raised upper ends to lowermost distal ends.

24. The exercise apparatus as claimed in claim 17 wherein each of said shuttles further includes a pedal having a longitudinal length and a lateral width for supporting said user's foot, when said shuttle is at said lower distal position said pedal being positioned with its longitudinal length in an orientation inclined in a first generally transverse direction to said predetermined path at an angle of between about 15° and 30° relative to horizontal to position the toes of said user's foot thereon in a generally downwardly extending orientation.

25. The exercise apparatus as claimed in claim 24 wherein in the lower distal position the pedal is moved to an orientation with its lateral width inclined in a second generally forward direction of said apparatus at an angle of between 15 and 50° relative to the horizontal.

26. The exercise apparatus as claimed in claim 24 wherein when the shuttle is in the upper position the said pedal is oriented at an inclined angle relative to the horizontal of between 0 and ±15°.

27. An ice skating or roller blading exercise apparatus, the apparatus generally extending in a front-to-back direction and including a handle member provided towards a forward end of the apparatus,

a pair of shuttles for movably supporting a foot of a user standing in a generally forward facing position thereon facing the forward end of the apparatus,

a guide assembly limiting movement of said shuttles in reciprocal movement along an associated predetermined path, each of said predetermined paths extending generally in a direction away from a central plane of the apparatus such that the paths do not substantially cross the central plane and extend from a respective forward proximal portion spaced towards the forward end of the apparatus and curving outwardly and rearwardly to a respective lower distal portion spaced rearwardly therefrom,

said shuttles being substantially limited in reciprocal movement along said associated predetermined path, and wherein when a first one of said shuttles is positioned towards said proximal portion, the second other shuttle being positionable at the distal portion to enable movement of the user's feet in a lateral motion generally simulating skating or roller blading movement.

28. The exercise apparatus of claim 27 wherein said guide assembly comprises a pair of rails, each said rail associated with a respective shuffle and curving in the direction of said respective predetermined path downwardly and rearward from a proximal end adjacent the proximal portion of said respective path towards a distal end adjacent the distal portion of said respective predetermined path,

the apparatus further including

a return device for biasing the shuttles to an initial staffing position spaced towards the proximal end of said associated rail, and

a tensioning mechanism selectively operable to permit said user to vary resistance to the movement of said shuttles towards the distal end portion.

29. The exercise apparatus of claim 28 wherein each of said shuttles further comprise,

a generally planar plate sized to support at least part of one of said user's feet thereon, said planer plate being pivotal coupled to a remaining portion of said shuttle,

a frame including a proximal support spaced towards said proximal end of the associated rail, and supporting a proximate-most portion of said plate, and

a distal support spaced towards said distal end of said associated rail and supporting a distal-most portion of said plate, and

wherein said distal support extends from said associated rail a height selected generally greater than that of said proximal support.

EX2011
Woodway USA, Inc.
IPR2023-00849

30. The exercise apparatus of claim **28** wherein each of said shuttles further comprise,

a pedal comprising a planar plate sized to support one of said user's feet thereon,

a frame including a proximal support spaced towards said proximal end of said associated rail, and supporting a proximate-most portion of said plate, and

a distal support spaced towards said distal end of said associated rail and supporting a distal-most portion of said plate, said distal support extending from said associated rail a height selected generally greater than that of said proximal support,

and wherein said proximal and distal support extends a height above said associated rail by a distance selected so that said plate assumes an orientation inclined relative to the horizontal at between 0 and ±15° when the shuttle is moved to a position adjacent to the proximal end, and inclined at between about 15 and 50° when the shuffle is moved to the distal end.

31. The exercise apparatus as claimed in claim **27** wherein each said shuttle includes a generally planar support surface for supportingly engaging said user's foot, when said shuttle is moved to the lower distal portion of said predetermined path the support surface being positioned in an orientation inclined generally in a forward direction of said apparatus at an angle inclined at between 15 and 50° relative to the horizontal.

32. The exercise apparatus as claimed in claim **27** wherein each said shuttle includes a generally planar support surface for supportingly engaging said user's foot when said shuttle is moved to the proximal portion of the predetermined path, the support surface being positioned in an orientation inclined at an angle relative to the horizontal at between 0 and 15°.

33. The exercise apparatus as claimed in claim **27** wherein each said shuttle includes a generally planar support surface for supportingly engaging said user's foot, when said shuttle is moved to said lower distal portion of said predetermined path said support surface being positioned with a longitudinal length in an orientation generally transverse to said direction of said predetermined path at an angle of between about 15° and 30° relative to horizontal.

34. The exercise apparatus as claimed in claim **33** wherein when said shuttle is moved to the lower distal portion of the predetermined path, the support surface being positioned with a lateral width in an orientation inclined generally in a forward direction of said apparatus at an angle inclined at between 15 and 50° relative to the horizontal.

35. The exercise apparatus as claimed in claim **33** wherein when said shuttle is moved to the proximal portion of the predetermined path, the support surface being positioned in an orientation inclined at an angle relative to the horizontal at between 0 and ±15°.

36. An ice skating or roller blading exercise apparatus, said apparatus extending generally in a front-to-back direction and comprising,

a pair of shuttles, each including an associated pedal having an upper surface for movably supporting a foot of a user standing in a generally forward facing position thereon facing a front of the apparatus,

a guide assembly, said guide assembly supporting and limiting each said shuttle in movement along an associated predetermined path, said predetermined paths extending in a substantially mirror arrangement and in a direction away from the other such that the paths do not substantially cross a central plane and extend from a raised upper position and curving downwardly and rearwardly to a lower distal position, and

wherein in actuation of said apparatus: said shuttles are each substantially limited in reciprocal movement along said associated predetermined path, and wherein when a first one of said shuttles is positioned in said proximal upper position, the second other shuttle being positionable in the distal position,

wherein in the lower distal position, the shuttle positions an upper surface of said pedal in an orientation inclined generally in a forward direction relative to the horizontal at an angle between about 15° and 50°, and wherein in said upper position said shuttle positioning said upper surface of said pedal in an orientation

inclined relative to the horizontal at an angle between 0 and 15°.

37. The ice skating apparatus as claimed in claim **36** wherein in said lower distal position said upper surface of said pedal is further inclined in generally transverse to the direction of said predetermined path at an angle of between about 15° and 30° relative to horizontal to reposition the toes of said user's foot thereon in a generally downwardly extending orientation.

38. An exercise apparatus comprising,

a pair of pedals, each for movably supporting a foot of a user standing in a generally forward facing position thereon,

a guide assembly,

said guide assembly supporting and limiting each said pedal in reciprocal movement along an associated predetermined path, said predetermined paths oriented in a substantially mirror arrangement and each extending in a direction away from the other such that the paths do not substantially cross a central plane and extend from a generally adjacent raised proximal upper end portion and curving outwardly and rearwardly, and extending downwardly to a lower distal end portion,

a return device for biasing the pedals to an initial starting position spaced towards the proximal end portion, and

a tensioning mechanism operable to permit said user to vary resistance to the movement of said pedals in at least one direction along said predetermined path.

39. The exercise apparatus of claim **38** wherein said guide assembly is configured to support an upper surface of said pedal in an orientation inclined at between 15 and 50° when the pedal is located adjacent to the distal end portion.

* * * * *

EX2011
Woodway USA, Inc.
IPR2023-00849