Financing starting at 0% APR, pay as low as $28/month for the WATERROWER Oak over 48 months* with Bread Pay™ →

treadmill

Sprintbok Treadmill

$6,999.00

AS LOW AS $177.48 USD/MO* WITH bread pay.

PREQUALIFY NOW

Oak Wood

ADD TO CART

Please chose the variant

EX2063
Woodway USA, Inc.
IPR2023-00849

Financing starting at 0% APR, pay as low as $28/month for the WATERROWER Oak over 48 months* with Bread Pay™ →

to ship within 1-3 business days of the order date. SPARE PARTS and ACCESSORIES are traditionally shipped within 7-10 business days.

Details →

DESCRIPTION

Fully powered by the user's legs, the Sprintbok knows no speed limitations. Whether training for endurance, sprint or interval runs – the Sprintbok perfectly absorbs any kind of running training through its ball bearing mounted slats.

The running belt's gentle inward curve renders the motorless treadmill even more benefits for a natural running feel. Shifting the body's center of gravity enables the runner to change rhythm and speed nearly effortlessly.

Compared to motorized models, the Sprintbok guarantees a heightened, more intense and effective treadmill workout, yielding a higher calorie burn, due to higher level of effort. Distance, sprint and interval runs – all forms of running training can be practiced on the Sprintbok. Exceptionally quiet during use, its cushioned belt reacts instantly to any shift in your speed input. The Sprintbok automatically adapts to all running styles and speeds without any unpleasant, persistent motor noise – this enables fluid change between sprint and slower-paced running.

ATTRIBUTES

Machine Weight	350 lbs
User Weight Max	350 lbs

Financing starting at 0% APR, pay as low as $28/month for the WATERROWER Oak over 48 months*
with Bread Pay™ →

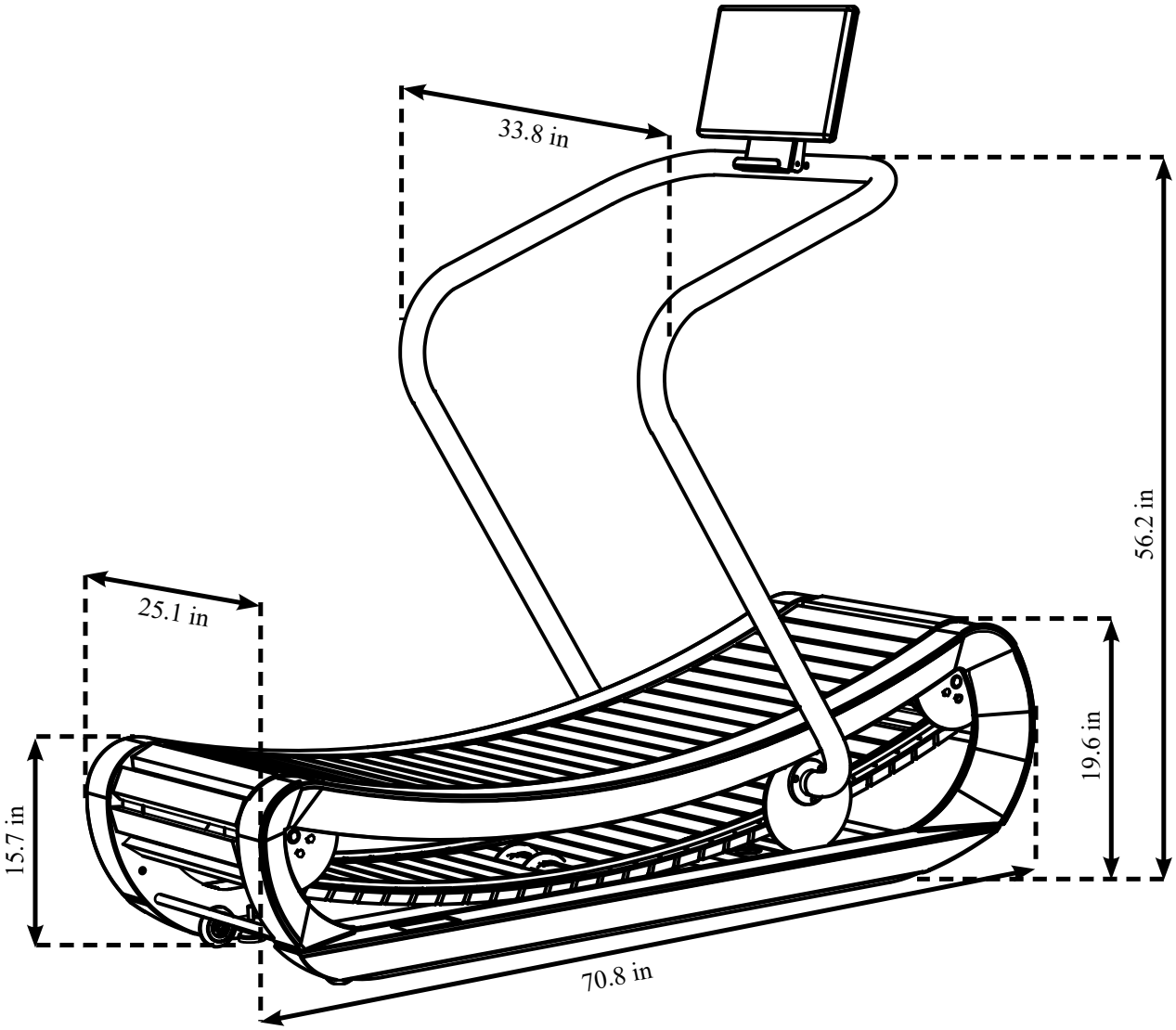

DOWNLOADS

PDF DIMENSIONS

Bread Pay™

Financing starting at 0% APR, pay as low as $28/month for the WATERROWER Oak over 48 months* with Bread Pay™ →

Bread Pay™ loans are made by Comenity Capital Bank, a Bread Financial™ company.

LEARN MORE

WATERROWER | NOHRD

US Office and Showroom

560 Metacom Ave,
Warren, RI 02885

info@waterrower.com

1 (800) 852 2210

1 (401) 247 7742

INFO

- Terms of Use
- Competition Terms & Conditions
- Privacy Policy
- Safety Precautions
- Nearest Dealer Request
- Rental Program
- Visit Our Showroom
- Sales Training
- Shipping Policy
- Fraud Warning

SUPPORT

- FAQ
- Service
- Contact Us
- International Offices
- Registrations
- Warranty Request
- Purification Tablets
- Referral Program
- Accessibility Statement
- Warranty

© 2023 WATERROWER, Inc. All Rights Reserved