Appendix A – Claim Chart for U.S. Patent No. 9,039,580 ("the '580 Patent")

* Many of the images contained herein show a disassembled representative Infringing Product in order to depict various elements of the Infringing Product. The disassembled Infringing Product has not been altered, modified, or otherwise changed relative to the as-sold Infringing Product. The serial number of the Infringing Product is M1701BK0024, which is shown in the picture below.

the '580 Patent	Assault Fitness AirRunner ("the Infringing Product")	
1. A manually powered treadmill comprising:	A "manually powered treadmill" is literally the infringing product. The pictured Assault Fitness AirRunner is described in the Assault AirRunner Marketing Brochure, as a "completely manual [treadmill], with no electrical consumption." *See, e.g.*, *AirRunner The Premier Elite Fitness Running Machine* Brochure at p. 2 (2017). *See also, e.g.,* LCF000017 ("The Assault AirRunner completely redefines the manual treadmill…"), LCF000168 ("AssaultRunner Elite Manual Treadmill"), LCF000678 ("Manual Treadmill"), LCF001866 ("This treadmill is manually operated.").	

Appendix A – Claim Chart for U.S. Patent No. 9,039,580 ("the '580 Patent")

the '580 Patent	Assault Fitness AirRunner ("the Infringing Product")	
a frame having a front end and a rear end positioned opposite the front end;	A "frame having a front end and a rear end positioned opposite the front end" is literally present in the Infringing Product. As shown, the frame [1], which designates an assembly of elements and not a single piece of, for example, metal, has a front end [2] and a rear end [3], where the front end [2] is positioned opposite the rear end [3]. *See also, e.g.,* LCF001762 (part no. 501 "Main Frame"), LCF001764 (part no. 501 "Main Frame"), LCF001766 (part no. 501 "Main Frame"), LCF002465 (titled "01 – Base Frame (Welded Together).pdf").	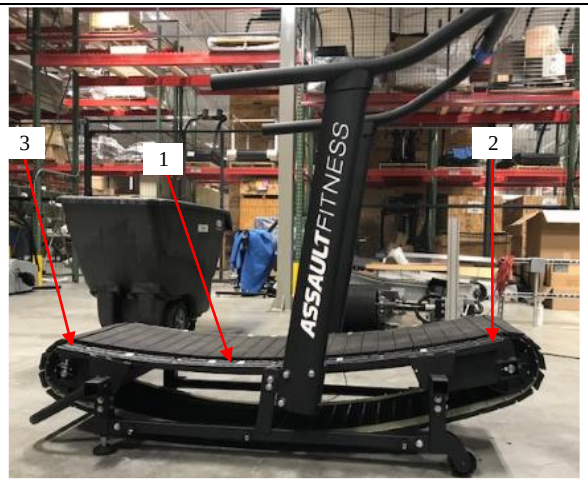 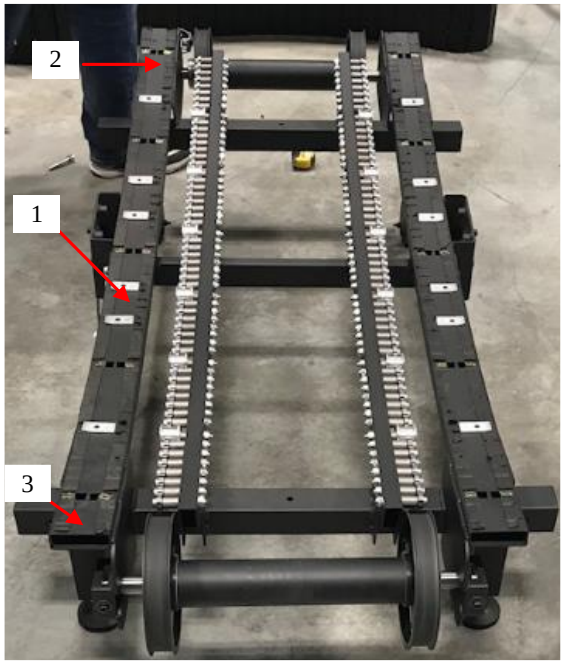

Appendix A – Claim Chart for U.S. Patent No. 9,039,580 ("the '580 Patent")

the '580 Patent	Assault Fitness AirRunner ("the Infringing Product")	
a front shaft rotatably coupled to the frame at the front end;	A "front shaft rotatably coupled to the frame at the front end" is literally present in the Infringing Product. The Court adopted the plain and ordinary meaning of the term "shaft." As shown, a front shaft [4] is rotatably coupled to the frame [1] at the front end [2]. As defined in the specification, and construed by the Court, "the term 'coupled' means the joining of two members directly or indirectly to one another … . Such joining may be achieved with the two members or the two members and any additional intermediate members." *See* '580 Patent at col. 32, ll. 10-14; Dkt. 59 at 8, n.1.Dkt. 59 at 8, n.1. Thus, coupling of the front shaft [4] to the frame [1] may be directly or indirectly, such as through an intermediate member (*e.g.*, via support element [16]). *See also, e.g.,* LCF000166 (Part Nos. 511* "Front Roller," 511-A "Front Roller Assembly").	

Appendix A – Claim Chart for U.S. Patent No. 9,039,580 (“the ’580 Patent”)

the ’580 Patent	Assault Fitness AirRunner (“the Infringing Product”)	
a rear shaft rotatably coupled to the frame at the rear end;	A “rear shaft rotatably coupled to the frame at the rear end” is literally present in the Infringing Product. The Court adopted the plain and ordinary meaning of the term “shaft.” As shown, a rear shaft [5] is rotatably coupled to the frame [1] at the rear end [3]. As defined in the specification, and construed by the Court, “the term ‘coupled’ means the joining of two members directly or indirectly to one another … . Such joining may be achieved with the two members or the two members and any additional intermediate members.” *See* ’580 Patent at col. 32, ll. 10-14; Dkt. 59 at 8, n.1. Thus, coupling of the rear shaft [5] to the frame [1] may be directly or indirectly, such as through an intermediate member (*e.g.*, via rear support element [17]). *See also* LCF000166 (Part Nos. 512* “Rear Roller,” 512-A “Rear Roller Assembly”).	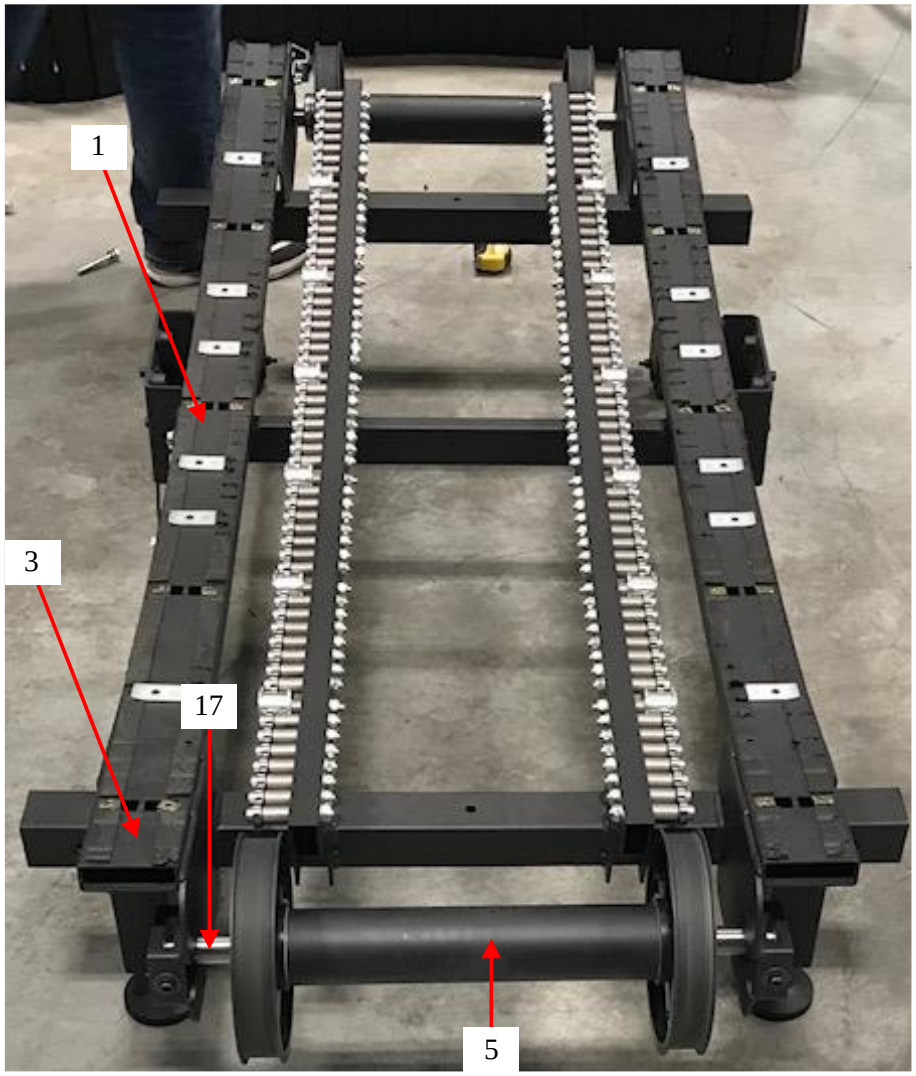

Appendix A – Claim Chart for U.S. Patent No. 9,039,580 ("the '580 Patent")

the '580 Patent	Assault Fitness AirRunner ("the Infringing Product")	
a first bearing rail having a plurality of bearings, the first bearing rail attached to a left side of the frame;	A "first bearing rail having a plurality of bearings" that is "attached to a left side of the frame" is literally present in the Infringing Product. As shown, a first bearing rail [8] includes a plurality of bearings [10A] and is attached to at least one cross-member [20] which is an element of the frame [1]. *See, e.g.,*'580 Patent at claim 3 and col. 5, ll. 56-61 (stating that "The frame 40 comprises ... one or more lateral or cross-members 56 ... ."). Therefore and with reference to the third picture and as shown, the first bearing rail [8] is attached to the left side of the frame [1]. *See also, e.g.,* LCF000166 (part nos. 545* "Belt Support Bearing" and 545-A "Belt Support Bearing Assembly"), LCF001993 (under "Specifications" "Running Belt Support: 12 Guide Pulleys; 100 Cartridge Bearings"), LCF002133 (under "Components" "Drive System"	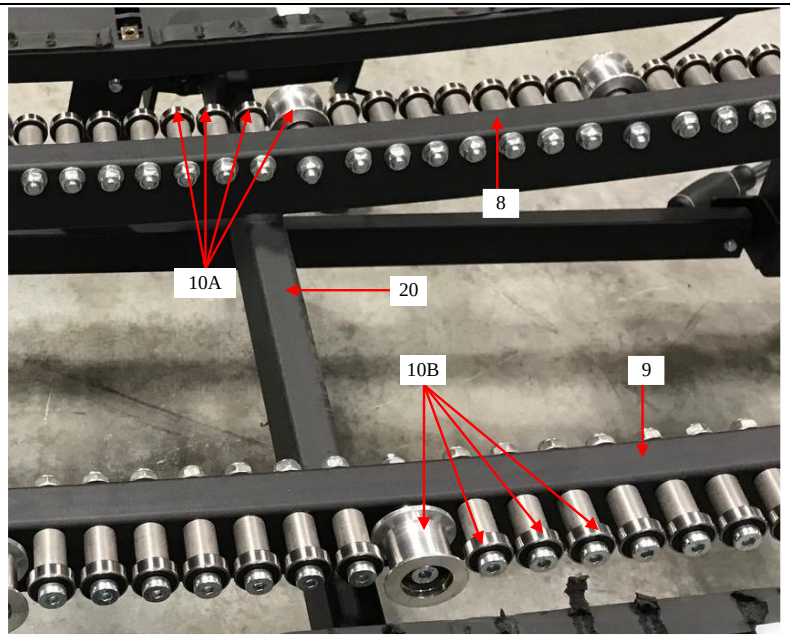 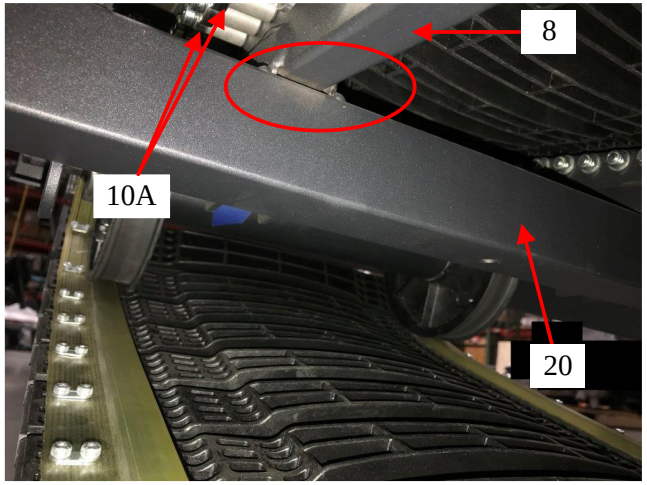

Appendix A – Claim Chart for U.S. Patent No. 9,039,580 ("the '580 Patent")

the '580 Patent	Assault Fitness AirRunner ("the Infringing Product")	
	listed "100 Precision Ball Bearings w/ 12 Roller Guides").	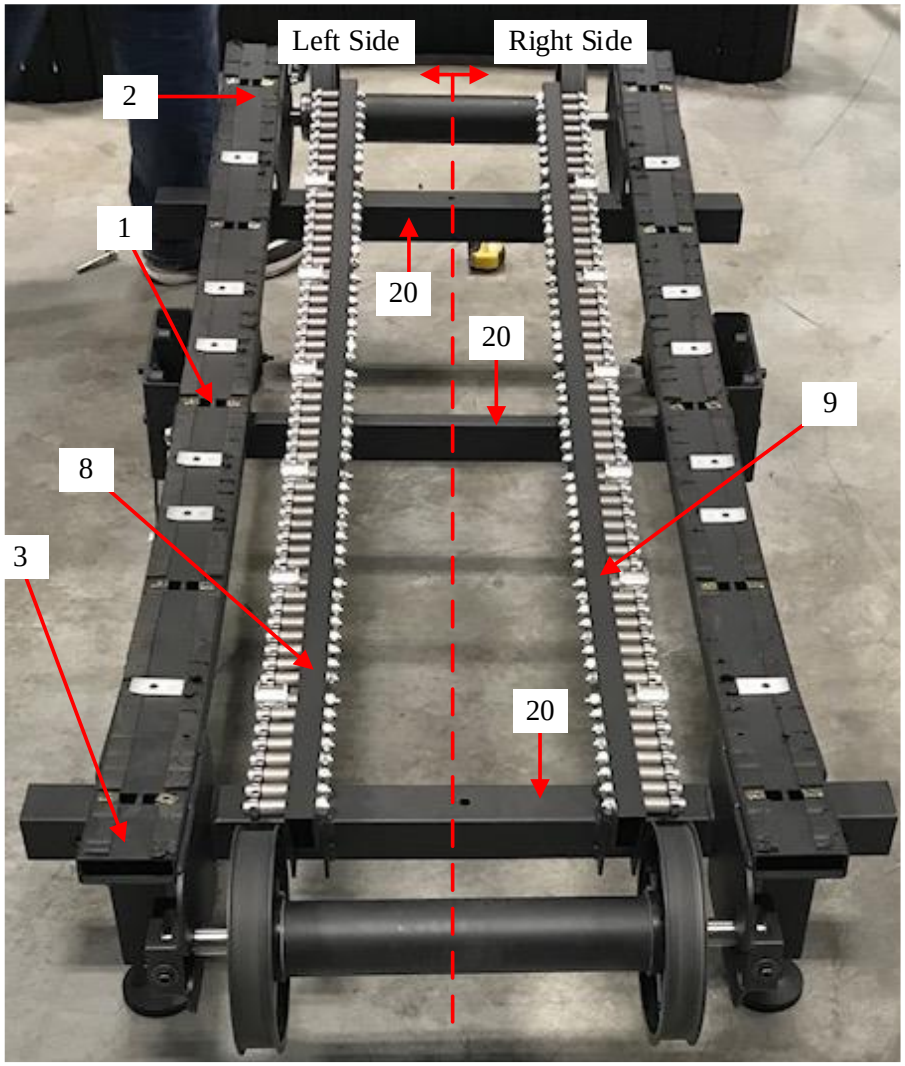

Appendix A – Claim Chart for U.S. Patent No. 9,039,580 ("the '580 Patent")

the '580 Patent	Assault Fitness AirRunner ("the Infringing Product")	
a second bearing rail having a plurality of bearings, the second bearing rail attached to a right side of the frame;	A "second bearing rail having a plurality of bearings" that is "attached to a right side of the frame" is literally present in the Infringing Product. As shown, a second bearing rail [9] includes a plurality of bearings [10B] and is attached to at least one cross-member [20] which is an element of the frame [1]. *See, e.g.,*'580 Patent at claim 3 and col. 5, ll. 56-61 (stating that "The frame 40 comprises ... one or more lateral or cross-members 56 ... ."). While the second picture only shows the first bearing rail [8] attached to the cross-member [20], a mirror image configuration is provided with the second bearing rail [9] and the cross-member [20]. Therefore and with reference to the third picture and as shown, the second bearing rail [9] is attached to the right side of the frame [1]. *See also, e.g.,* LCF000166 (part no. 545* "Belt Support Bearing" and 545-A "Belt Support Bearing Assembly"),	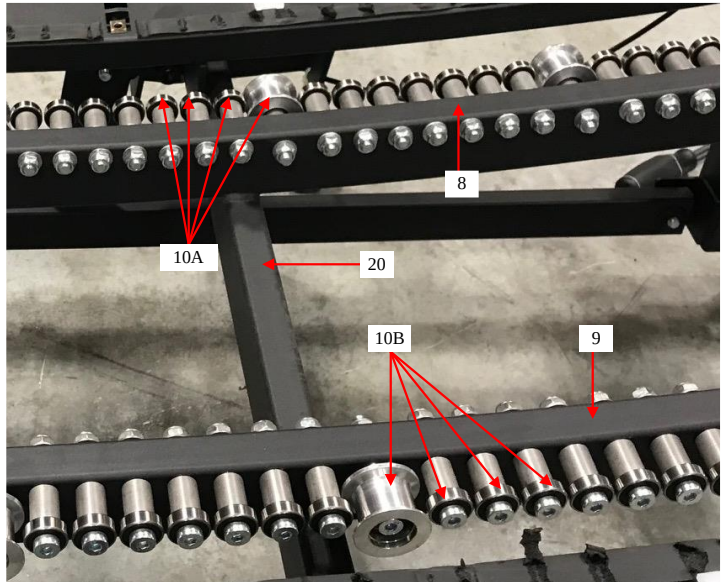 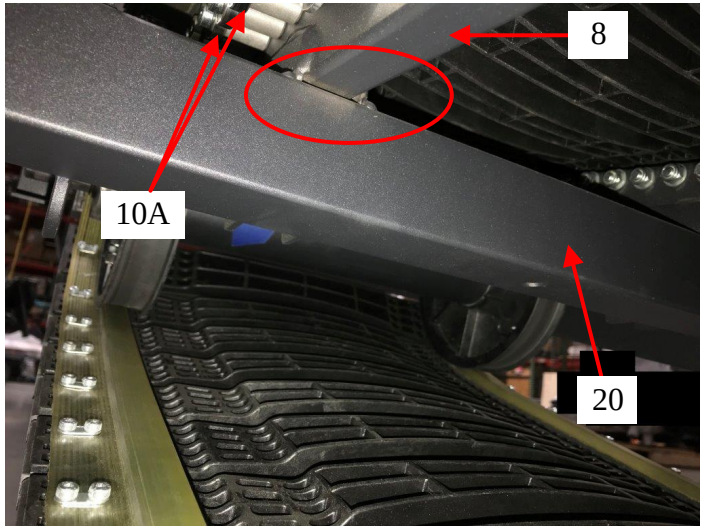

Appendix A – Claim Chart for U.S. Patent No. 9,039,580 ("the '580 Patent")

the '580 Patent	Assault Fitness AirRunner ("the Infringing Product")	
	LCF001993 (under "Specifications" "Running Belt Support: 12 Guide Pulleys; 100 Cartridge Bearings"), LCF002133 (under "Components" "Drive System" listed "100 Precision Ball Bearings w/ 12 Roller Guides").	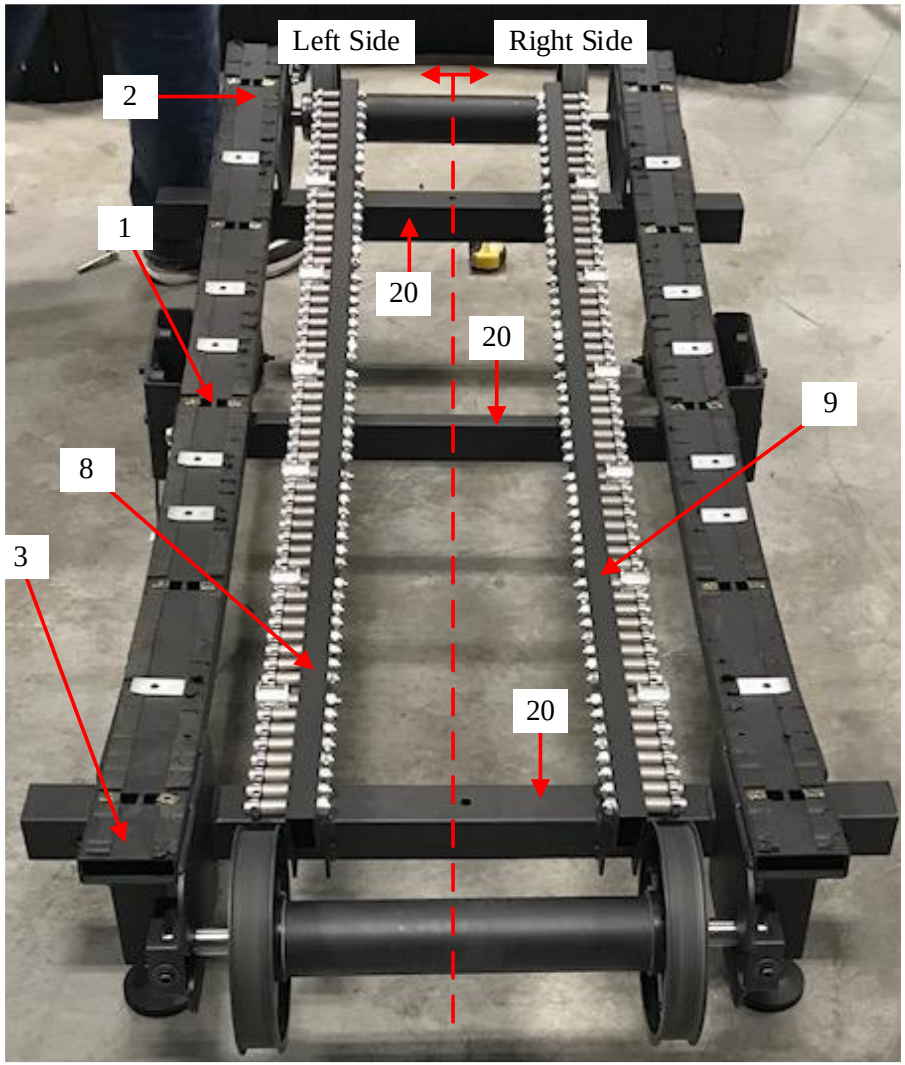

Appendix A – Claim Chart for U.S. Patent No. 9,039,580 ("the '580 Patent")

the '580 Patent	Assault Fitness AirRunner ("the Infringing Product")	
a running belt supported by the first bearing rail and the second bearing rail and disposed about the front shaft and the rear shaft, wherein the running belt follows a curved running surface; and	A "running belt" supported by the "first bearing rail" and the "second bearing rail," "disposed about the front shaft and the rear shaft," and following a "curved running surface" is literally present in the Infringing Product. As shown, a running belt [11] follows a curved running surface [12]. The running belt [11] is supported by the plurality of bearings [10A] and [10B] of the first bearing rail [8] and the second bearing rail [9]. The running belt [11] is also disposed about the front shaft [4] and the rear shaft [5]. While the lower two pictures only show the running belt [11] being disposed about the front shaft [4] and supported by the first bearing rail [8] and second bearing rail [9], the running belt [11] is similarly disposed about the rear shaft [5]. *See also, e.g.,* LCF000013 (describing the treadmill as including "…a slat belt running surface…"), LCF000795 (under "Proposed Product Features" "Slatted belt construction: allows	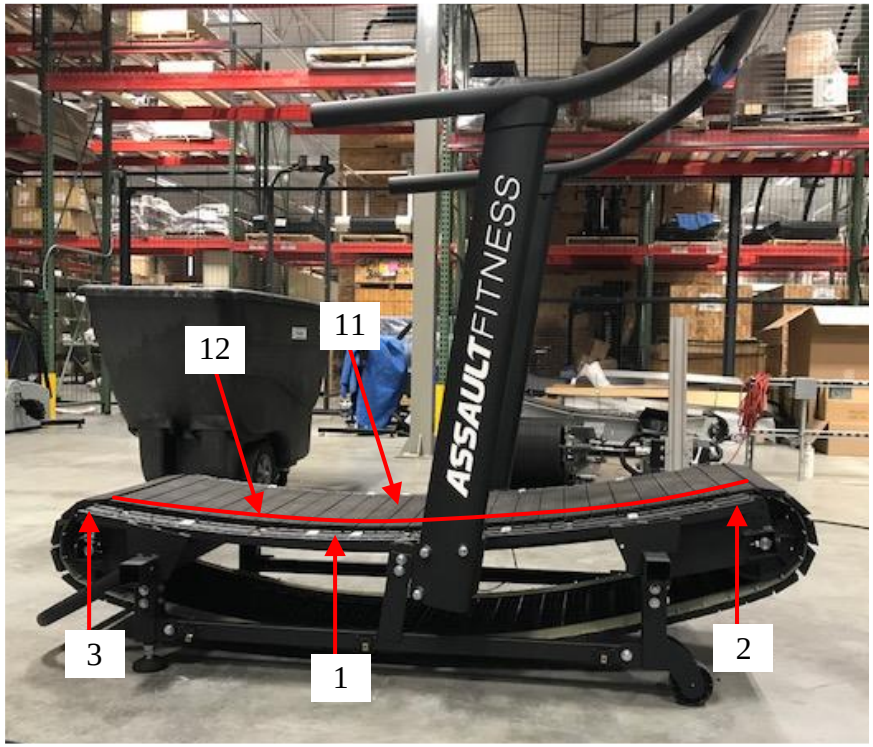 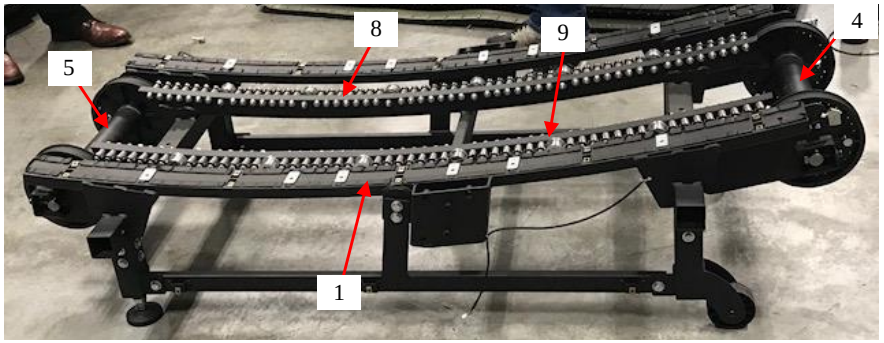

Appendix A – Claim Chart for U.S. Patent No. 9,039,580 ("the '580 Patent")

the '580 Patent	Assault Fitness AirRunner ("the Infringing Product")	
	for curved running surface" and under "Frame" "Shall be designed to support a curved running surface,"), LCF000895 (under "Low Impact" "The contoured design…"), LCF02133 (with "Belt Design" described as "Contoured").	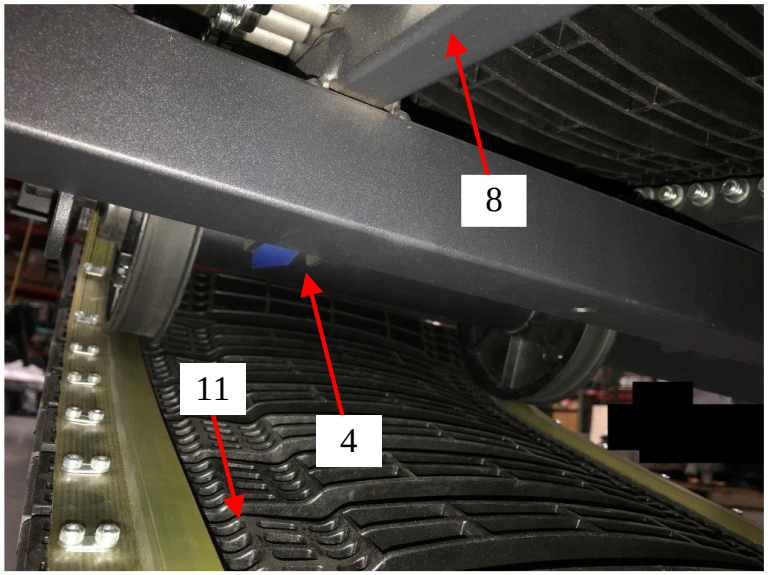 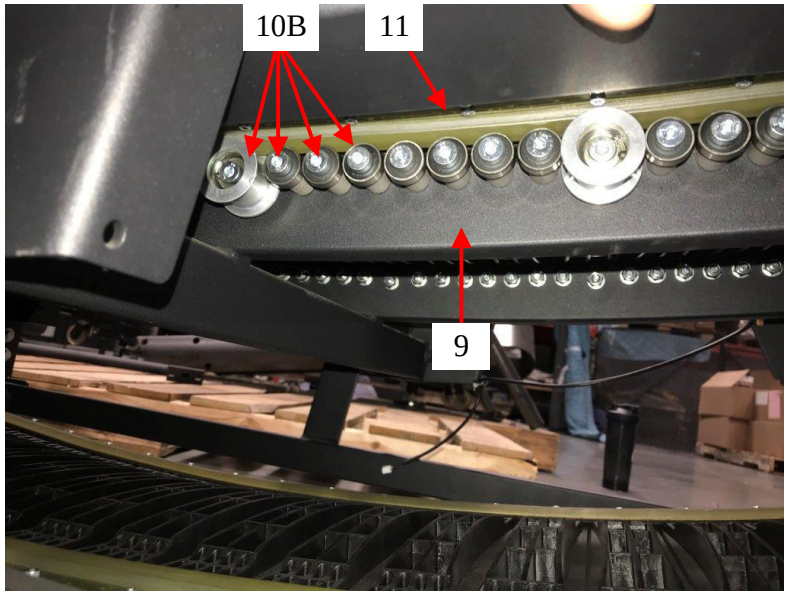

Appendix A – Claim Chart for U.S. Patent No. 9,039,580 (“the ’580 Patent”)

the ’580 Patent	Assault Fitness AirRunner (“the Infringing Product”)	
a safety device coupled to at least one of the front shaft and the rear shaft, wherein the safety device is structured to substantially prevent rotation of at least one of the front shaft and the rear shaft in a first rotational direction while permitting rotation of the at least one of the front shaft and the rear shaft in a second rotational direction opposite the first rotational direction.	A “safety device coupled to at least one of the front shaft and the rear shaft” and “structured to substantially prevent rotation of at least one of the front shaft and the rear shaft in a first rotational direction while permitting rotation of the at least one of the front shaft and the rear shaft in a second rotational direction opposite the first rotational direction” is literally present in the Infringing Product. “At least one of the front shaft and the rear shaft” can mean that the “safety device” is coupled to (i) the “front shaft” alone; (ii) the “rear shaft” alone; or (iii) each of the “front shaft” and the “rear shaft.” As shown, the safety device [13] is coupled to the front shaft [4]. The Court construed the term “safety device” as “a means-plus-function claim limitation with the corresponding structure as a one-way bearing assembly, a cam locking system, a taper lock, a user operated pin system, or a band brake system with a lever.” *See* Dkt. 59 at 22. The Court construed the term	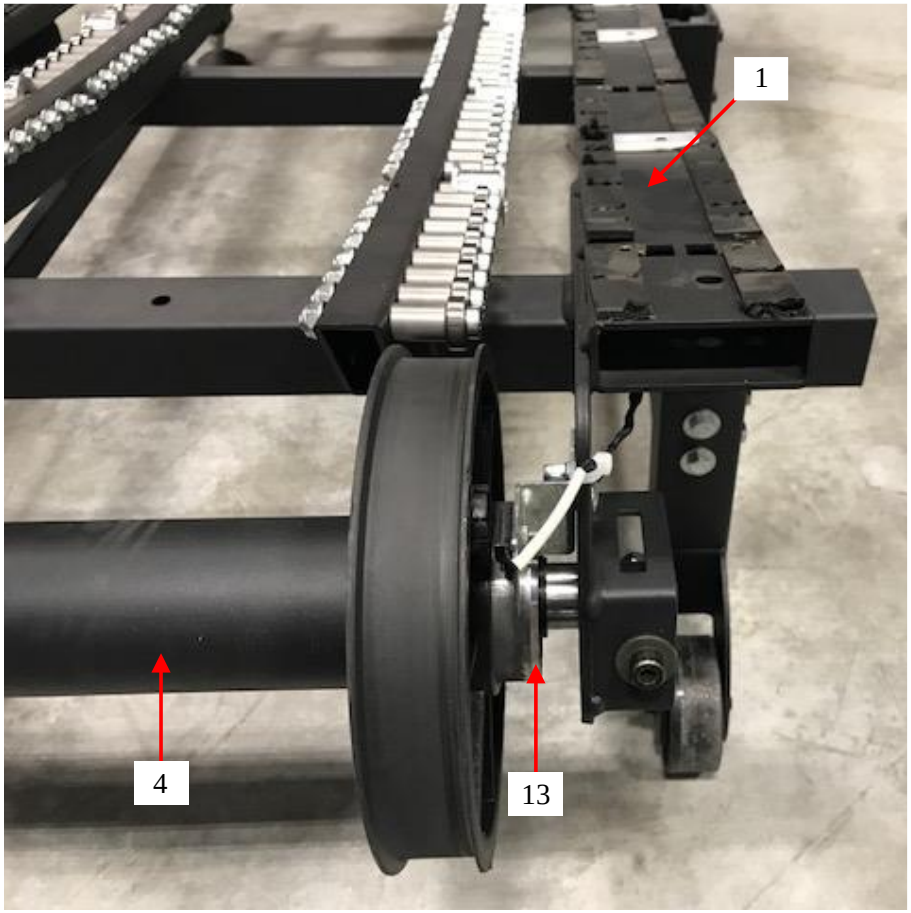

Appendix A – Claim Chart for U.S. Patent No. 9,039,580 ("the '580 Patent")

the '580 Patent	Assault Fitness AirRunner ("the Infringing Product")	
	"substantially prevent[]" as "restricts rotation to allow for only one rotational direction of movement." *Id*. at 16. The Infringing Product meets the means-plus-function limitation. The Infringing Product contains at least one of the identified corresponding structures (or their equivalents) and accomplishes the claimed function. As shown, the safety device [13] includes a one-way bearing assembly. *See* LCF001767 (at row 75 "BEARING, ONE-WAY") and LCF002474 (describing the included One-Way Clutch Bearing as "i.e., the safety device"). Specifically, the safety device [13] includes an Altra Industrial Motion brand type CSK 25 PP "sprag type freewheel[]." *See* Altra Industrial Motion, *Overrunning Clutches and Backstops* at p. 16 (2017). The CSK 25 PP "freewheel allows rotation in one direction only … . The freewheel prevents reverse rotation … ." *Id.* at p. 3.	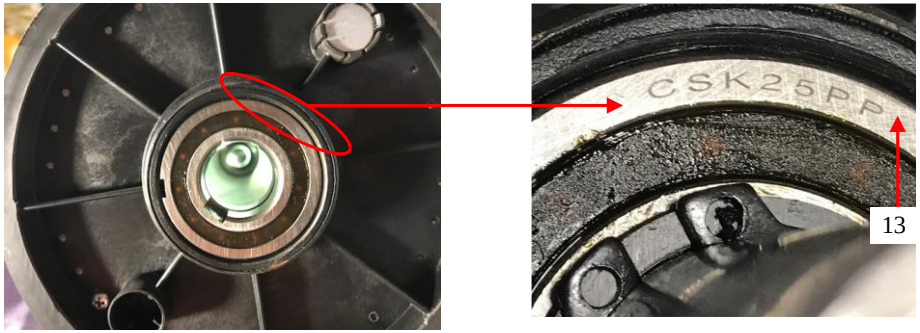

the '580 Patent	Assault Fitness AirRunner ("the Infringing Product")	
	The safety device [13] performs the claimed function as the structures disclosed in the '580 patent, that is "substantially prevent rotation of at least one of the front shaft and the rear shaft," because the safety device [13] is coupled to the front shaft [4] and because the safety device [13] "allows the Front Roller Subassembly to rotate around the Front Shaft [i.e., the shaft internal to shaft 4] in only one direction.". *See* LCF002474. The safety device [13] performs the function in the same way. The safety device [13] is a "one-way bearing assembly," one of the structures disclosed in the '580 Patent corresponding to the term "safety device," and one race of the bearing rotates while another is fixed. The safety device [13] performs the function in the same way for the same result. The safety device [13] results in one race of the safety device [13] rotating with the shaft [4] relative to the frame and the other race of the safety device [13] fixed relative to the frame, such that in the one	

the '580 Patent	Assault Fitness AirRunner ("the Infringing Product")	
	direction the shaft [4] freely rotates and in the opposite direction the two races engage with each other and the shaft [4] is substantially prevented from rotation. The safety device [13] also performs the function of the "safety device," in substantially the same way to achieve substantially the same result as the exemplary embodiments of a one-way bearing assembly in column 27, line 7 to column 29, line 28 of the '580 Patent. The '580 Patent discloses a one-way bearing assembly 1300 includes "a housing 1302 which supports an inner ring 1304 that cooperates with the rear shaft 68 and supports an outer ring 1306 fixed relative to the housing 1302….The housing 1302 is fixed to a bracket 1310 that is connected to…the frame 40." Similarly, the safety device [13] fixes one ring of a one-way bearing relative to the frame while allowing the other ring to rotate with the shaft [4] . *See* LCF002474. In the case of the safety device [13], the only	

the '580 Patent	Assault Fitness AirRunner ("the Infringing Product")	
	difference, if any, is the movement of the support from the outside ring to the inside ring, such that the inside ring is fixed relative to the frame and the outside ring rotates. The function of the safety device [13] is unchanged by this insubstantial modification. See '580 Patent at col. 32, ll. 36–39 ("the position of elements may be reversed or otherwise varied").	

Appendix A – Claim Chart for U.S. Patent No. 9,039,580 ("the '580 Patent")

the '580 Patent	Assault Fitness AirRunner ("the Infringing Product")	
2. The manually powered treadmill of claim 1, wherein the frame includes at least one cross-member, a left side member, and a right side member; and wherein the at least one cross-member extends between the left side member and the right side member.	The "frame" having "at least one cross-member, a left side member, and a right side member" where the "at least one cross-member extends between the left side member and the right side member" is literally present in the Infringing Product. As shown, the frame [1] includes at least one cross-member [20], a left side member [18], and a right side member [19], where the at least one cross-member [20] extends between the left side member [18] and the right side member [19]. *See also, e.g.,* LCF002465 (titled "01 – Base Frame (Welded Together).pdf" illustrating the base frame including at least one cross member extending between left and right side members).	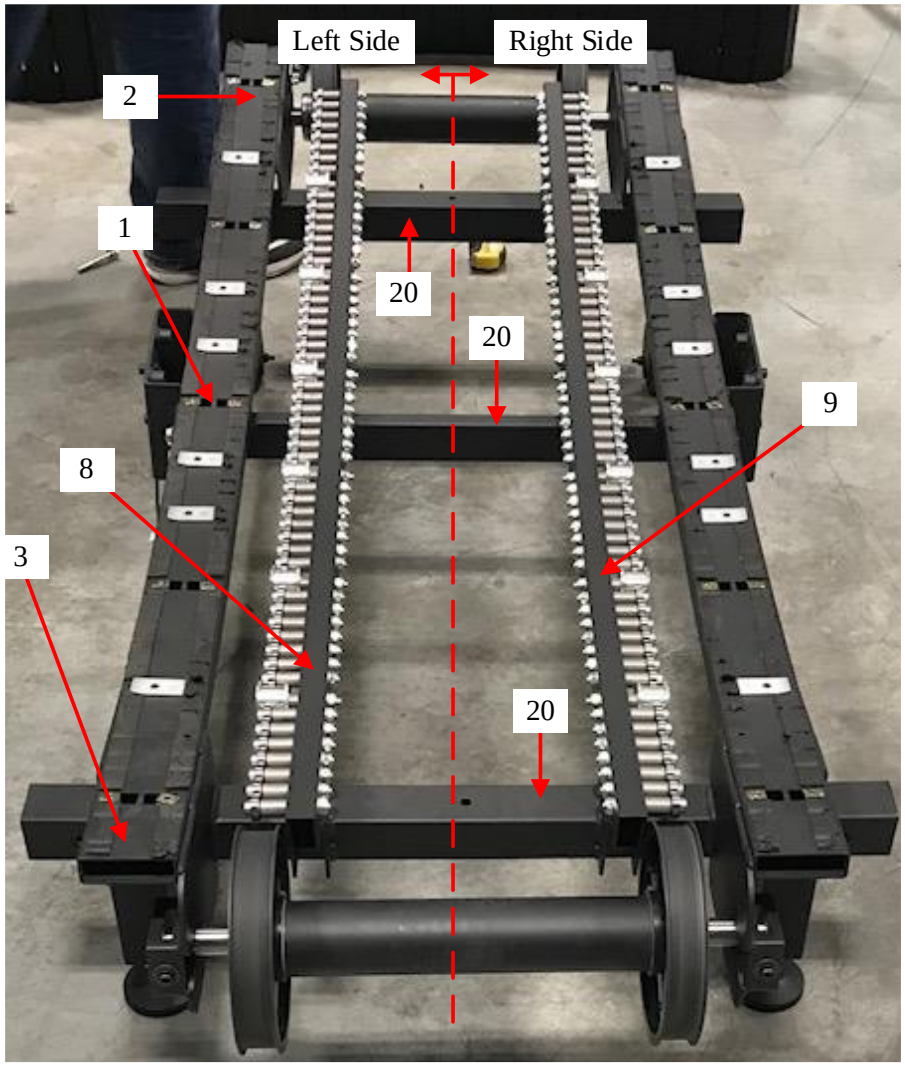

Appendix A – Claim Chart for U.S. Patent No. 9,039,580 ("the '580 Patent")

the '580 Patent	Assault Fitness AirRunner ("the Infringing Product")	
3. The manually powered treadmill of claim 2, wherein each one of the first and second bearing rails are coupled to at least one of the at least one cross-member.	"Each one of the first and second bearing rails" being "coupled to at least one of the at least one cross-member" is literally present in the Infringing Product. As shown, each of the first bearing rail [8] and the second bearing rail [9] is coupled to the at least one cross-member [20] (welding the two elements is circled in the second and third pictures). *See also, e.g.,* LCF002467 (titled "03 – Base Frame with Bearings – Guide Pulleys – Rollers.pdf" showing the bearing rails coupled to the cross member).	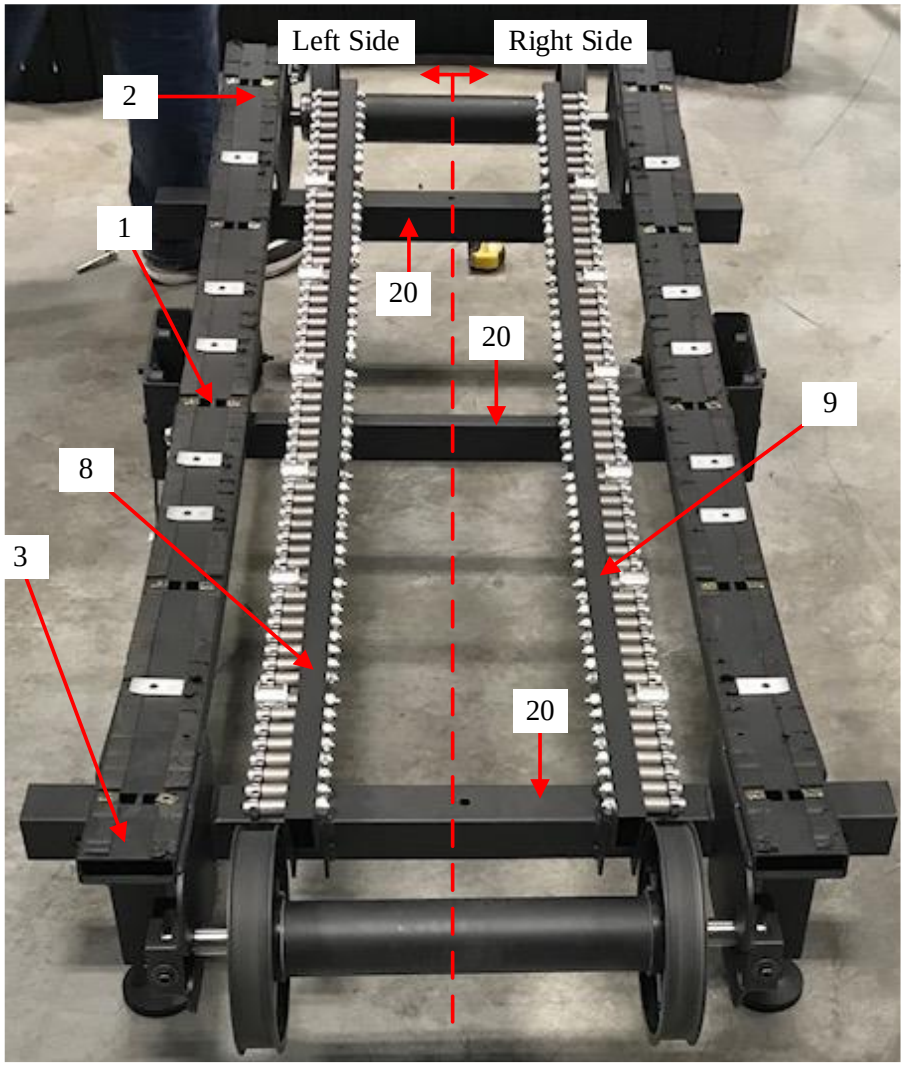

Appendix A – Claim Chart for U.S. Patent No. 9,039,580 ("the '580 Patent")

the '580 Patent	Assault Fitness AirRunner ("the Infringing Product")	
		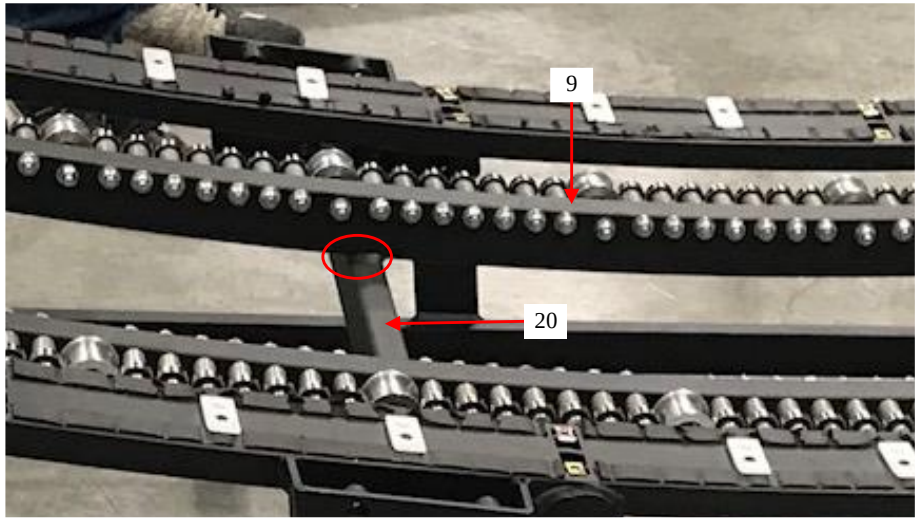 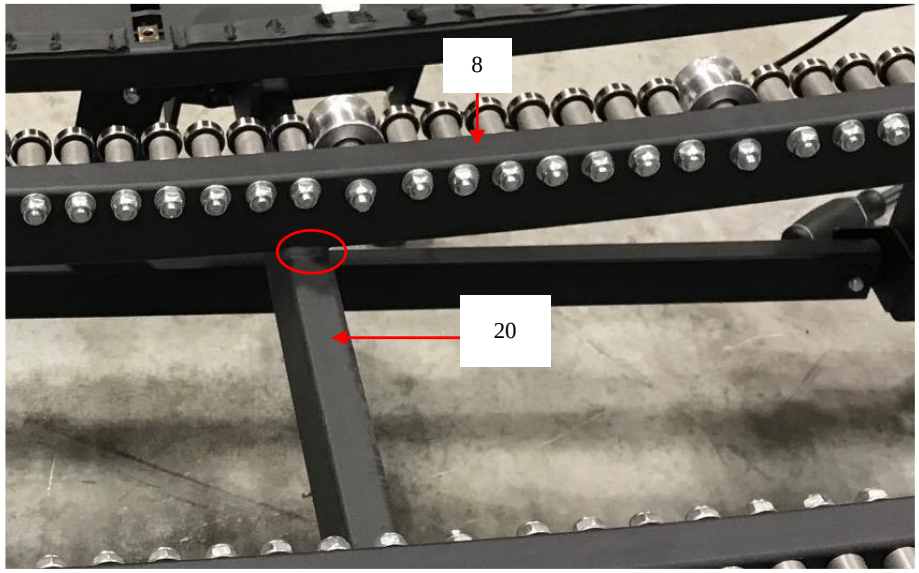

Appendix A – Claim Chart for U.S. Patent No. 9,039,580 ("the '580 Patent")

the '580 Patent	Assault Fitness AirRunner ("the Infringing Product")	
5. The manually powered treadmill of claim 1, wherein each one of the first bearing rail and the second bearing rail define in part a top profile corresponding to the curved running surface.	"Each one of the first bearing rail and the second bearing rail" that "define in part a top profile corresponding to the curved running surface" is literally present in the Infringing Product. The first bearing rail [8] and the second bearing rail [9] define a top profile [21] that is curved, and top profile [21] corresponds to the curved running surface [12]. The bearing rails [8] and [9] at least, in part, support the running belt [11] thereby creating top profile [21] corresponding to the curved running surface [12]. *See also, e.g.,* LCF002467 (titled "03 – Base Frame with Bearings – Guide Pulleys – Rollers.pdf" showing the bearing rails define a top profile corresponding to the curved running surface).	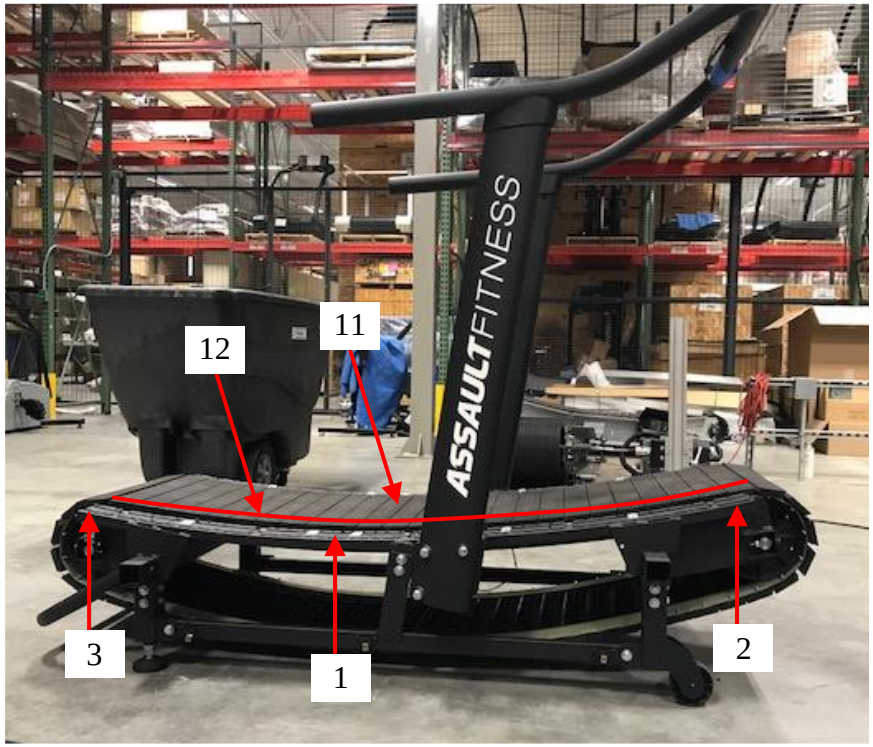 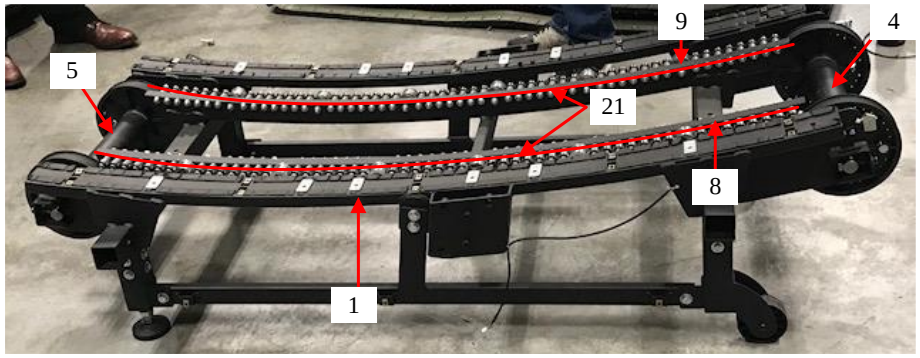

Appendix A – Claim Chart for U.S. Patent No. 9,039,580 ("the '580 Patent")

the '580 Patent	Assault Fitness AirRunner ("the Infringing Product")	
6. The manually powered treadmill of claim 1, wherein the safety device includes a one-way bearing.	The "safety device" including "a one-way bearing" is literally present in the Infringing Product. As shown, the safety device [13] includes an Altra Industrial Motion brand type CSK "self-contained ball bearing unit[]." *See* Altra Industrial Motion, *Overrunning Clutches and Backstops* at p. 9 (2017). Specifically, the safety device [13] includes a CSK 25 PP "sprag type freewheel[] integrated into a 62 … series ball bearing[]... ." *Id*. at p. 16. CSK 25 PP "freewheel allows rotation in one direction only ... . The freewheel prevents reverse rotation… ." *Id.* at p. 3. *See also, e.g.,* LCF001767 (at row 75 "BEARING, ONE-WAY") and LCF002474 (describing the included One-Way Clutch Bearing as "i.e., the safety device").	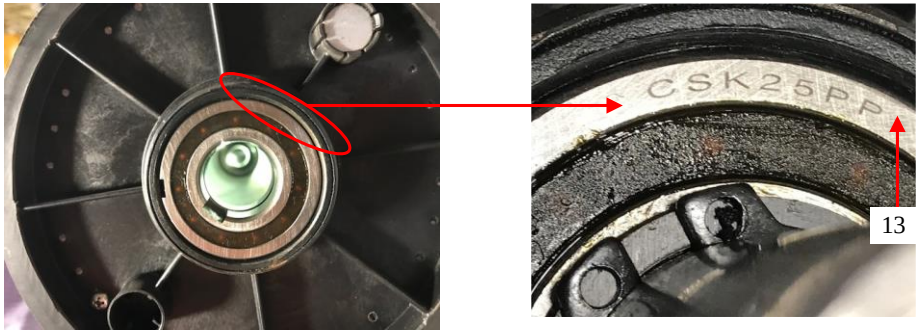

Appendix A – Claim Chart for U.S. Patent No. 9,039,580 ("the '580 Patent")

the '580 Patent	Assault Fitness AirRunner ("the Infringing Product")	
10. The manually powered treadmill of claim 1, further comprising a handrail attached to the frame and structured to provide a support structure for the user of the manually powered treadmill.	A "handrail attached to the frame" that is "structured to provide a support structure for the user of the manually powered treadmill" is literally present in the Infringing Product. As shown, the manually powered treadmill includes a handrail [22] that is structured to provide a support structure to a user of the manually powered treadmill. *See also, e.g.,* LCF000168 ("Assembly Step Two: Handrail Installation," describes the process for attaching a handrail to the frame), LCF000228 ("Always grasp the handrail before mounting or dismounting the treadmill,"), LCF000914 (part no. 504-A "Handrail Assembly").	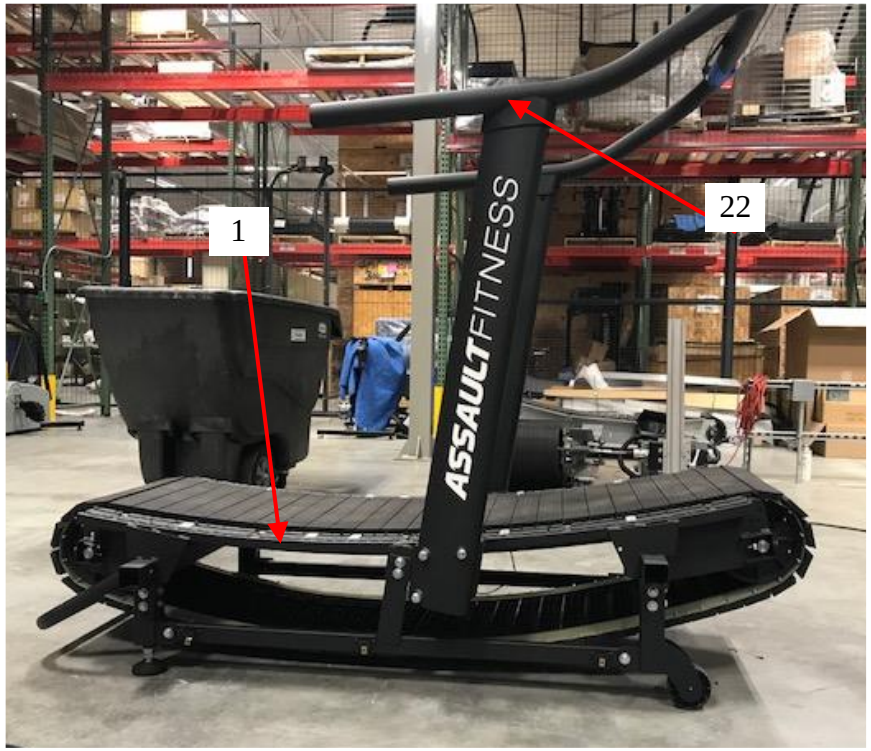

Appendix A – Claim Chart for U.S. Patent No. 9,039,580 ("the '580 Patent")

the '580 Patent	Assault Fitness AirRunner ("the Infringing Product")	
25. A method, comprising:		
providing a manually powered treadmill,	A "manually powered treadmill" is literally the infringing product. The pictured Assault Fitness AirRunner is described in the Assault AirRunner Marketing Brochure, as a "completely manual [treadmill], with no electrical consumption." *See, e.g.*, *AirRunner The Premier Elite Fitness Running Machine* Brochure at p. 2 (2017). *See also, e.g.,* LCF000017 ("The Assault AirRunner completely redefines the manual treadmill…"), LCF000168 ("AssaultRunner Elite Manual Treadmill"), LCF000678 ("Manual Treadmill"), LCF001866 ("This treadmill is manually operated.").	

Appendix A – Claim Chart for U.S. Patent No. 9,039,580 ("the '580 Patent")

the '580 Patent	Assault Fitness AirRunner ("the Infringing Product")	
the manually powered treadmill having a frame with a front end and rear end;	A "frame having a front end and a rear end positioned opposite the front end" is literally present in the Infringing Product. As shown, the frame [1], which designates an assembly of elements and not a single piece of, for example, metal, has a front end [2] and a rear end [3]. *See also, e.g.,* LCF001762 (part no. 501 "Main Frame"), LCF001764 (part no. 501 "Main Frame"), LCF001766 (part no. 501 "Main Frame"), LCF002465 (titled "01 – Base Frame (Welded Together).pdf").	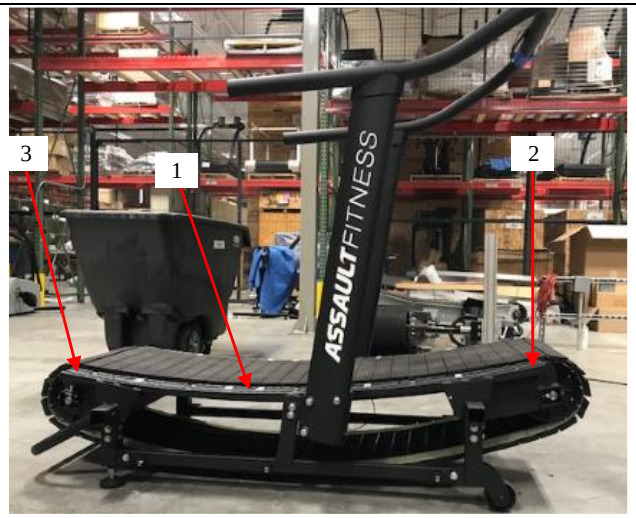 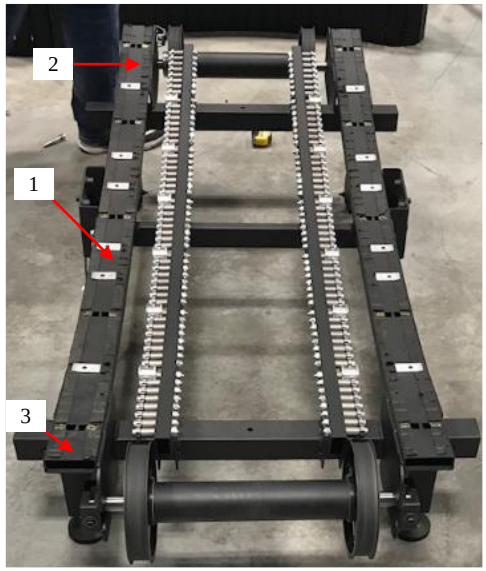

Appendix A – Claim Chart for U.S. Patent No. 9,039,580 ("the '580 Patent")

the '580 Patent	Assault Fitness AirRunner ("the Infringing Product")	
providing a first bearing rail and a second bearing rail, the first and second bearing rails each comprising a plurality of bearings and extending longitudinally on the frame, wherein the first and second bearing rails define a curved top profile;	A "first bearing rail and a second bearing rail" each having "a plurality of bearings and extending longitudinally on the frame" where "the first and second bearing rails define a curved top profile" is literally provided the Infringing Product. As shown, a first bearing rail [8] includes a plurality of bearings [10A] and extends longitudinally on one side of the frame [1] (*i.e.*, the left side), and a second bearing rail [9] includes a plurality of bearings [10B] and extends longitudinally on one side of the frame [1] (*i.e.*, the right side). As also shown, the first bearing rail [8] and the second bearing rail [9] define a curved top profile [21]. *See also, e.g.,* LCF000166 (part no. 545* "Belt Support Bearing" and 545-A "Belt Support Bearing Assembly"), LCF001993 (under "Specifications" "Running Belt Support: 12 Guide Pulleys; 100 Cartridge Bearings"), LCF002133 (under	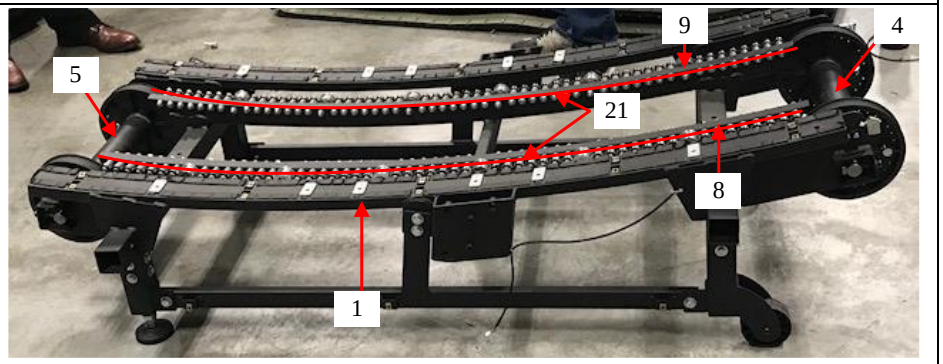 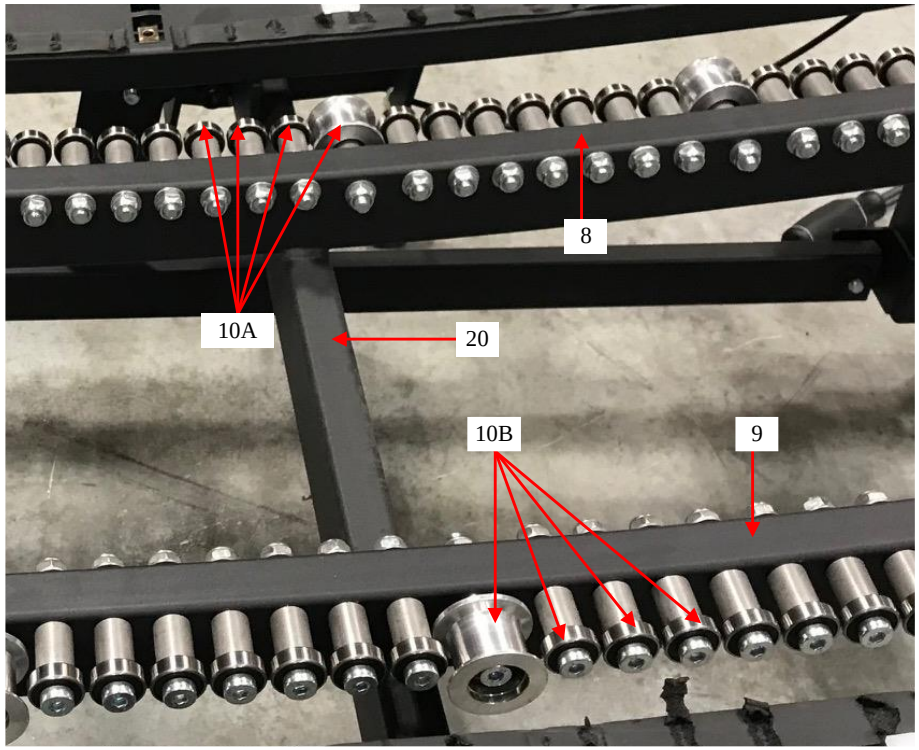

Appendix A – Claim Chart for U.S. Patent No. 9,039,580 ("the '580 Patent")

the '580 Patent	Assault Fitness AirRunner ("the Infringing Product")	
	"Components" "Drive System" listed "100 Precision Ball Bearings w/ 12 Roller Guides").	
disposing a running belt on the plurality of bearings of the first bearing rail and the second bearing rail such that the running belt follows a top curved running surface corresponding to the curved top profile of the first and second bearing rails;	A "running belt" that is disposed "on the plurality of bearings of the first bearing rail and the second bearing rail such that the running belt follows a top curved running surface corresponding to the curved top profile of the first and second bearing rails" is literally present in the Infringing Product. As shown, a running belt [11] follows a curved running surface [12]. The running belt [11] is disposed on the plurality of bearings [10A] of the first bearing rail [8] and the plurality of bearings [10B] of the second bearing rail [9]. Because the curved top profile [21] is proximate the curved running surface [12], the curved running surface [12] corresponds to the curved top profile [21] of the first and second bearing rails [8] and [9]. *See also, e.g.,* LCF000013 (describing the treadmill as including "…a slat belt running surface…"), LCF000795 (under	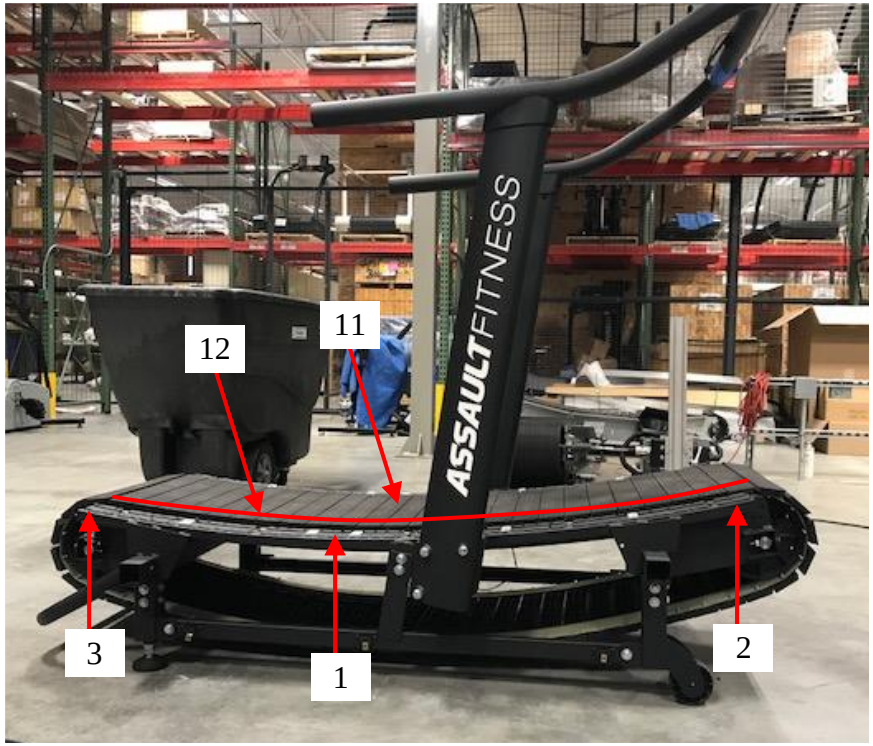

Appendix A – Claim Chart for U.S. Patent No. 9,039,580 (“the ’580 Patent”)

the ’580 Patent	Assault Fitness AirRunner (“the Infringing Product”)	
	“Proposed Product Features” “Slatted belt construction: allows for curved running surface” and under “Frame” “Shall be designed to support a curved running surface,”), LCF000895 (“under “Low Impact” “The contoured design…”), LCF02133 (with “Belt Design” described as “Contoured”).	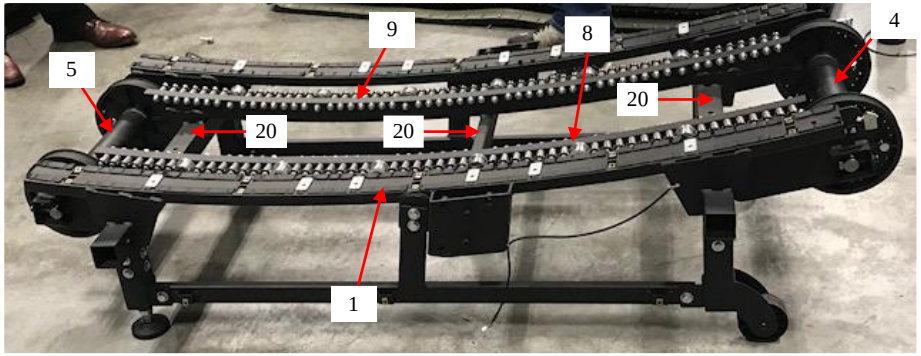 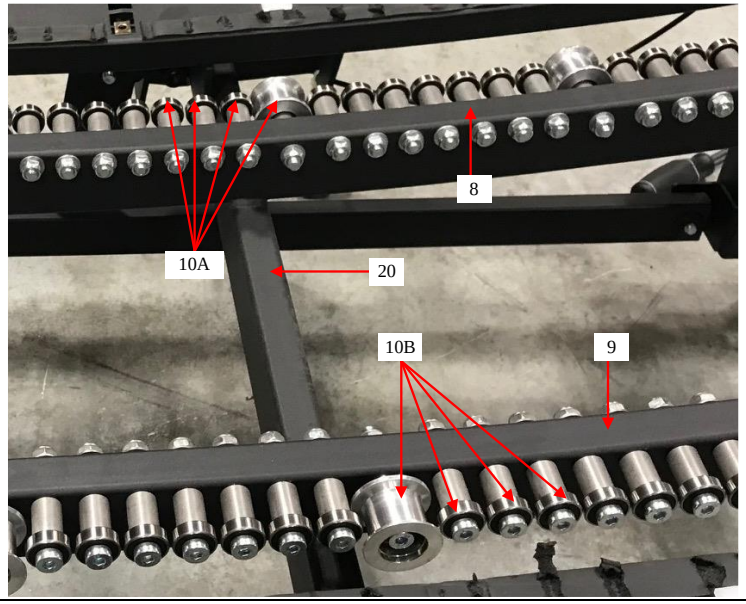

Appendix A – Claim Chart for U.S. Patent No. 9,039,580 (“the ’580 Patent”)

the ’580 Patent	Assault Fitness AirRunner (“the Infringing Product”)	
		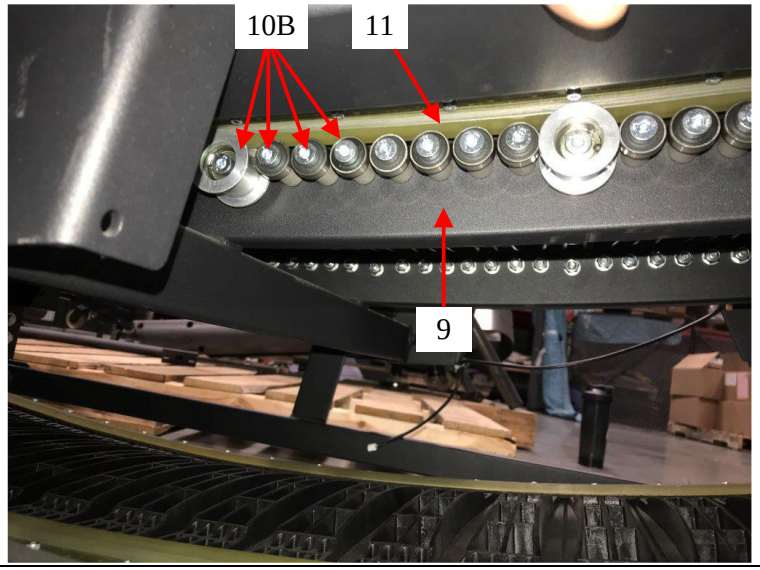

Appendix A – Claim Chart for U.S. Patent No. 9,039,580 ("the '580 Patent")

the '580 Patent	Assault Fitness AirRunner ("the Infringing Product")	
permitting movement of the running belt in a first direction; and substantially preventing movement of the running belt in a second direction opposite the first direction.	"[P]ermitting movement of the running belt in a first direction" and "substantially preventing movement of the running belt in a second direction opposite the first direction" is literally present in the Infringing Product. As shown, the treadmill includes a safety device [13] coupled to a front shaft [4]. The running belt [11] is disposed about the front shaft [4]. The safety device [13] includes an Altra Industrial Motion brand type CSK 25 PP "sprag type freewheel[]." *See, e.g.*, Altra Industrial Motion, *Overrunning Clutches and Backstops* at p. 16 (2017). The CSK 25 PP "freewheel allows rotation in one direction only... The freewheel prevents reverse rotation ... ." *Id.* at p. 3. The safety device [13] is coupled to the running belt [11] via the front shaft [4], and because the safety device [13] "allows rotation in one direction," *id.*, the safety device [13] permits movement "of the running belt [11] in a first direction" and	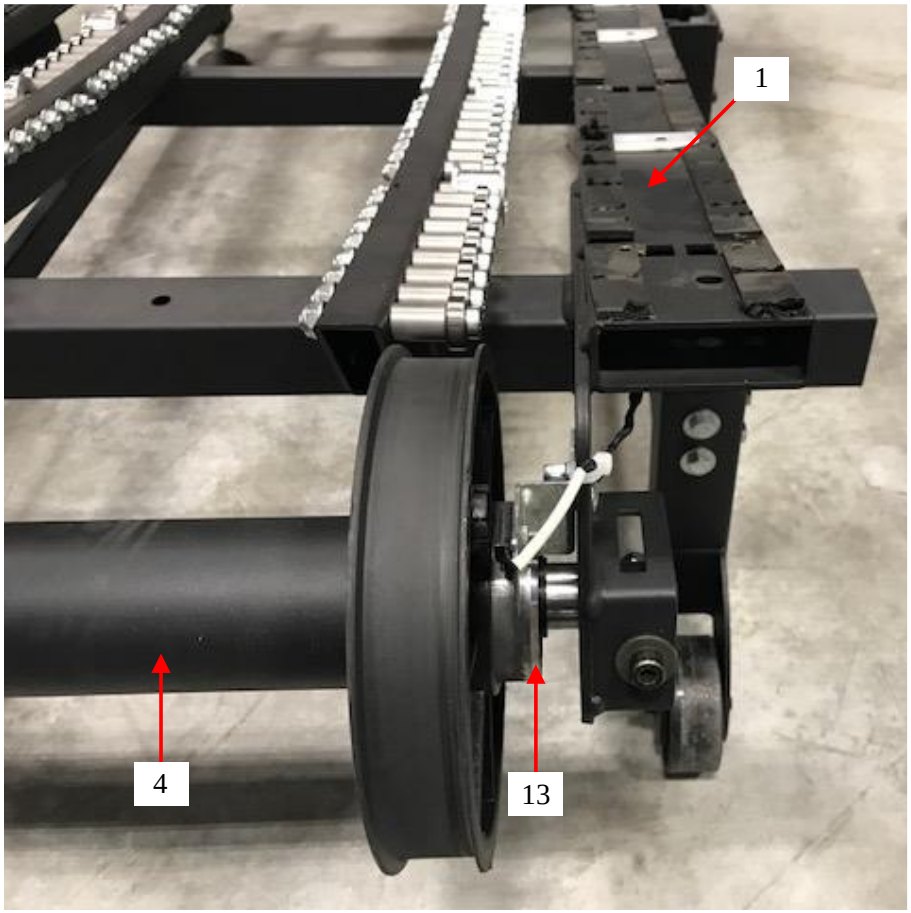
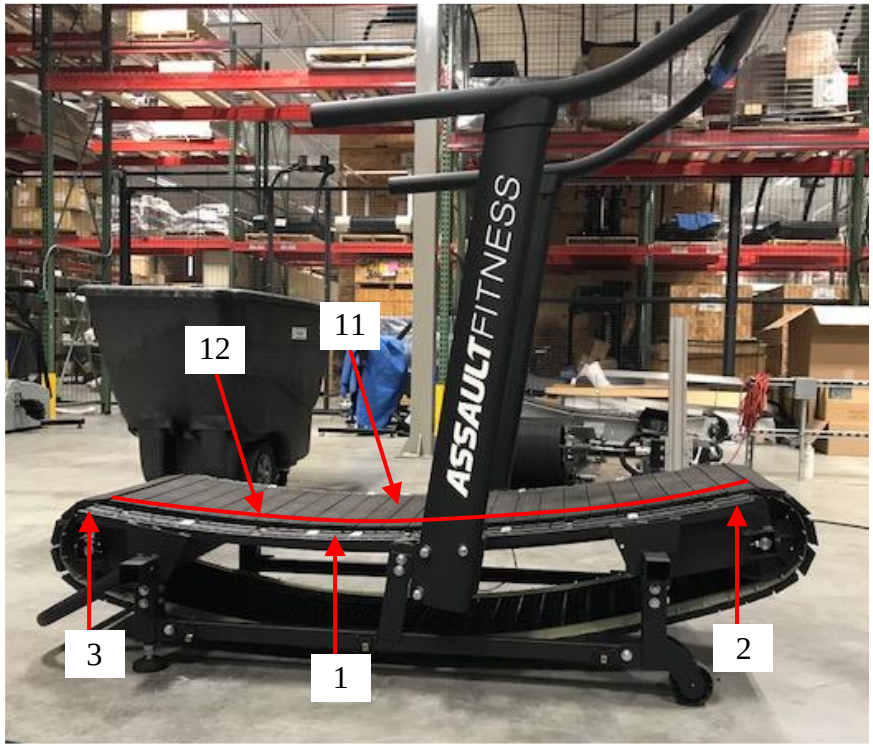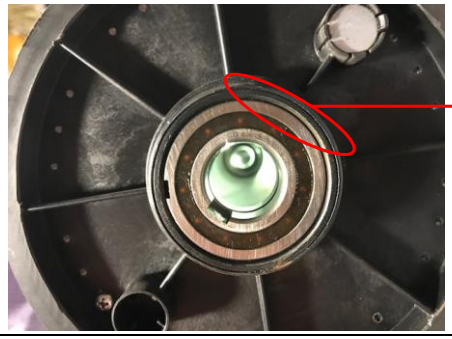
the '580 Patent	Assault Fitness AirRunner ("the Infringing Product")	
	"prevents reverse rotation," *id.*, of the running belt [11]. This is consistent with and supported by the *Assault AirRunner Manual Treadmill Technical Specifications and Use Guidelines* at p. 1 that states that "the belt moves freely in only one direction." *See also, e.g.,* LCF000170 ("[t]he belt moves freely in only one direction."), LCF002474 ("The One-Way Clutch Bearing (i.e., the safety device) in combination with the Front Shaft and the Shaft key allows the Front Roller Subassembly to rotate around the Front Shaft in only one direction.").