Trials@uspto.gov
571-272-7822

Paper 42
Date: October 24, 2024

UNITED STATES PATENT AND TRADEMARK OFFICE

BEFORE THE PATENT TRIAL AND APPEAL BOARD

LIFECORE FITNESS, LLC
d/b/a ASSAULT FITNESS,
Petitioner,

v.

WOODWAY USA, INC.,
Patent Owner.

IPR2023-00849
Patent 10,799,745 B2

Before MEREDITH C. PETRAVICK, NEIL T. POWELL, and AMEE A. SHAH, *Administrative Patent Judges.*

SHAH, *Administrative Patent Judge*.

JUDGMENT
Final Written Decision
Determining Some Challenged Claims Unpatentable
35 U.S.C. § 318(a)

I. INTRODUCTION

LifeCore Fitness, LLC d/b/a Assault Fitness ("Petitioner") filed a Petition pursuant to 35 U.S.C. §§ 311–319 for *inter partes* review of claims 1, 4, 7–12, 14, 17, 18, and 20–27 ("the Challenged Claims") of U.S. Patent No. 10,799,745 B2 (Ex. 1001, "the '745 patent"). Paper 2 ("Pet."). Woodway USA, Inc. ("Patent Owner") is identified as the owner of the '745 patent. Paper 15. On October 25, 2023, we instituted this *inter partes* review as to all Challenged Claims and all grounds presented in the Petition. Paper 6 ("Institution Decision" or "Inst. Dec.").

After institution, Patent Owner filed a Response to the Petition. Paper 16[1] ("PO Resp."). Petitioner filed a Reply. Paper 24 ("Pet. Reply"). Patent Owner filed a Sur-Reply. Paper 28 ("PO Sur-Reply"). An oral hearing was held on July 24, 2024 and the transcript is entered into the record. Paper 41.

We have jurisdiction under 35 U.S.C. § 6. This is a Final Written Decision under 35 U.S.C. § 318(a) as to the patentability of the Challenged Claims of the '745 patent. For the reasons discussed below, we determine that Petitioner has not established by a preponderance of the evidence that Challenged Claims 1, 4, 7–9, 17, 18, 20, 26, and 27 are unpatentable but has established by a preponderance of the evidence that Challenged Claims 10–12, 14, and 21–25 are unpatentable.

A. RELATED MATTERS

Patent Owner has asserted infringement of the '745 patent in *Woodway USA, LLC v. LifeCore Fitness, Inc. d/b/a Assault Fitness*, Case

[1] The record contains sealed and redacted versions for several paper. We refer to the redacted papers in this decision.

No. 3:22-cv-00492-JO-BLM (S.D. Cal.) (the "'492 litigation"). Pet. 2, v; Paper 4, 1; Paper 15, 1. Petitioner indicates that "[t]he '745 Patent is being asserted in this proceeding, along with three other patents within the same family: U.S. 9,039,580 [the "'580 patent"], U.S. 10,561,884 [the "'884 patent"], and U.S. 11,465,005 [the "'005 patent"]," and that the '580 patent was at issue in district court proceedings *USA, Inc. v. Samsara Fitness, LLC et al.*, Case No. 2-15-cv-00956 DWI, and *Chapco, Inc. et al v. Woodway USA, Inc.*, Case No. 3-15-cv-01665 (DCT). Pet. 2, v. Petitioner also filed petitions challenging the '580 patent in IPR2023-00836, the '884 patent in IPR2023-00843, and the '005 patent in IPR2024-00083.

B. Real Parties-in-Interest

Petitioner identifies "LifeCore Fitness, LLC d/b/a Assault Fitness" as the real party in interest. Paper 21, 1. Patent Owner identifies "Woodway USA, Inc." as "the sole assignee of U.S. Patent 10,799,745." Paper 15, 1; Paper 4, 1.

C. Overview of the '745 Patent

The '745 patent is titled "MANUAL TREADMILL AND METHODS OF OPERATING THE SAME," and was issued on October 13, 2020, from U.S. Patent Application No. 16/792,426. Ex. 1001, codes (21), (45), (54). The '745 patent also refers back to Provisional Application No. 61/161,027, filed March 17, 2009. *Id.* at code (60).

The treadmill includes:

> a frame; a front running belt pulley; a rear running belt pulley; a plurality of bearings coupled to the frame; a running belt at least partially supported by at least one of the front running belt pulley and the rear running belt pulley, the running belt including a running surface, at least a portion of which is curved; a support element coupled to the frame; and a safety device coupled to the

> running belt. The safety device is at least partly supported by the support element. The running belt freely rotates in a first direction of rotation relative to the frame, however, in a second direction of rotation, opposite the first direction of rotation, engagement between the support element and at least a portion of the safety device substantially prevents rotation the running belt relative to the frame.

Ex. 1001, Abstr.

Figure 1, reproduced below, is a perspective view of the manual treadmill having a non-planar running surface according to an exemplary embodiment of the ’745 patent. Ex. 1001, 2:66–67.

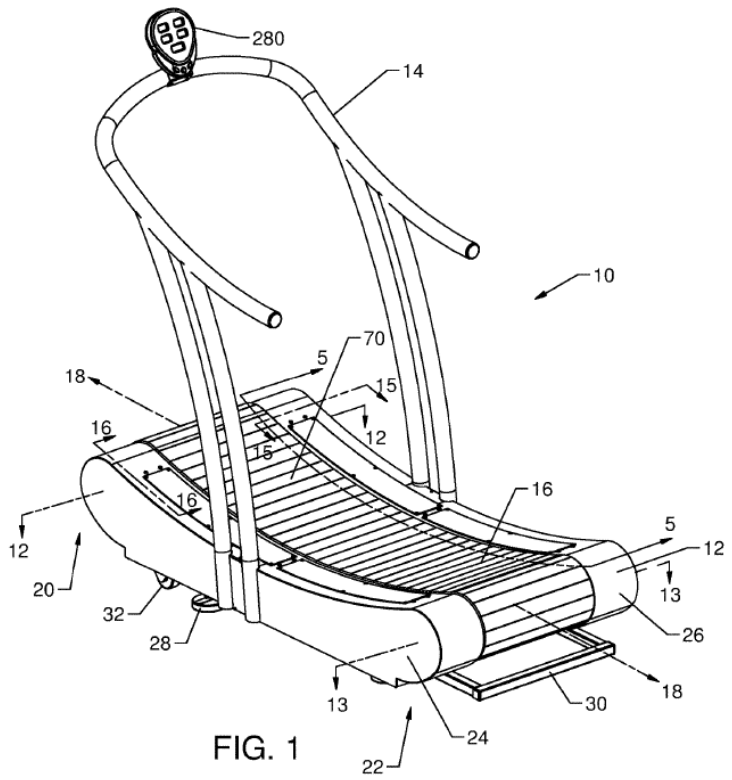

FIG. 1

Figure 1 illustrates a manual treadmill 10 that generally comprises a base 12 and a handrail 14 mounted to the base. Ex. 1001, 4:50–52. Base 12 includes a running belt 16 that extends substantially longitudinally along a longitudinal axis 18. *Id.* at 4:52–54. Base 12 is supported by multiple

support feet 28. *Id.* at 4:63–64. Running surface 70 has a substantially concave curve and a substantially convex curve. *Id.* at 6:41–43.

Figure 2, reproduced below, is a left-hand partially exploded perspective view of a portion of the manual treadmill according to the exemplary embodiment of Figure 1 of the ’745 patent. Ex. 1001, 3:1–3.

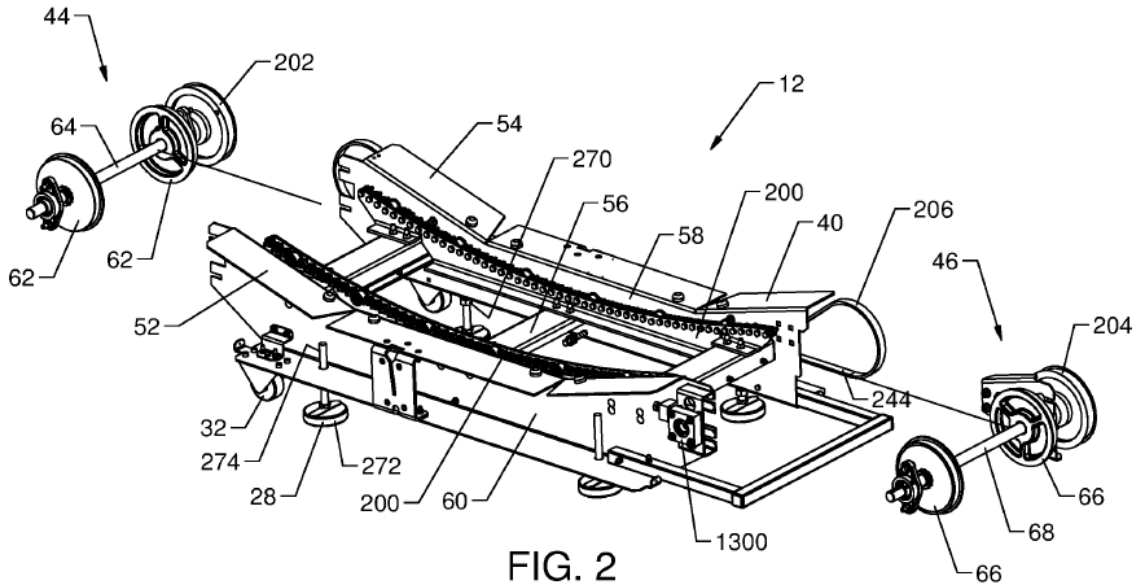

FIG. 2

Figure 2 illustrates treadmill base 12, which includes a frame 40, a front shaft assembly 44 positioned near a front end 48 of frame 40, and a rear shaft assembly 46 positioned near the rear end 50 of frame 40, generally opposite the front end 48. Ex. 1001, 5:12–16. Front shaft assembly 44 is coupled to frame 40 at front end 48, and rear shaft assembly 46 is coupled to frame 40 at rear end 50 so that the frame supports these two shaft assemblies. *Id.* at 5:17–21. To help support the running belt, base 12 also includes opposing bearing rails 200 having a plurality of bearings 208, as shown in Figure 9, reproduced below.

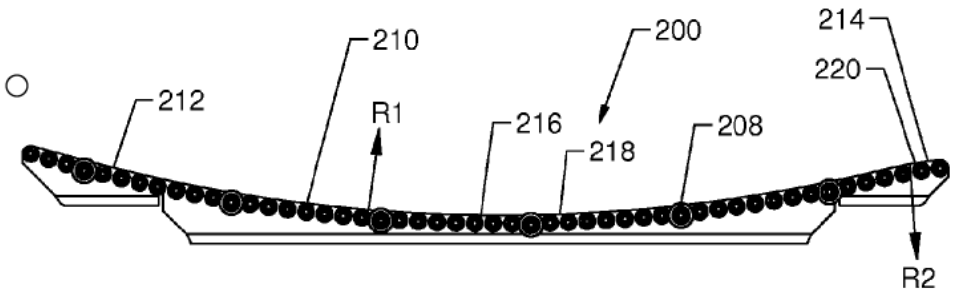

FIG. 9

Figure 9 depicts a side elevation of the bearing rails 200. Ex. 1001, 3:26–27. Bearing rails 200 are supported by and mounted to frame 40. *Id.* at 11:23–27. Rails 200 include a plurality of bearings, an upper profile having a central portion with a concave curve continued to the front portion, and a rear portion having a complex curve. *Id.* at 11:20–23; 11:57–12:5. "The running belt 16 contacts and is supported in part by the bearings 208 of the bearing rails and bearing 208 are configured to rotate, thereby decreasing the friction experienced by the running belt 16 as the belt moves along the top profile 210." *Id.* at 11:39–43.

"A number of safety devices may be used with the treadmill 10 to help prevent undesirable forward rotation of the running belt 16." Ex. 1001, 27:11–13. A safety device as illustrated in Figure 36, reproduced below, has a one-way bearing assembly that is a "motion restricting element . . . configured to permit rotation of at least one of the front and rear shaft assemblies" and the running belt in only one direction. *Id.* at 27:13–19.

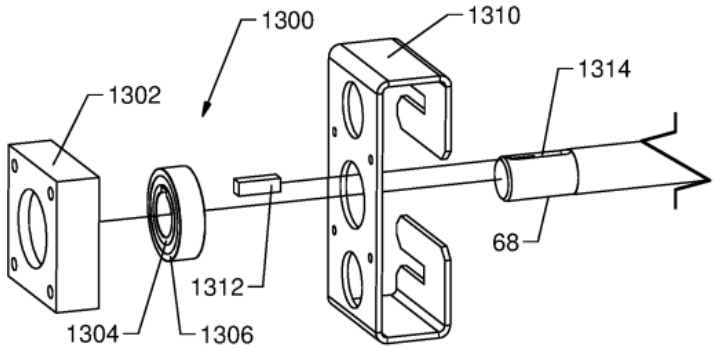

FIG. 36

Figure 36 "is a perspective view of a one-way bearing for the manual treadmill." Ex. 1001, 4:37–38. The one-way bearing assembly 1300 comprises housing 1302 fixed to bracket 1310 supports both inner ring 1304 that cooperates with rear shaft 68 and outer ring 1306 that is fixed relative to housing 1302. *Id.* at 27:22–25. A plurality of asymmetric sprags that are not shown in Figure 36 are disposed between inner ring 1304 and outer ring 1306. *Id.* at 27:26–28. The asymmetric sprags provide for motion in one direction and prevent motion in the opposite direction. *Id.* at 27:28–29. The one-way bearing can include rollers in addition to sprags. *Id.* at 27:40–42.

The bearing assembly also includes key 1312 that is fixed relative to inner ring 1304 and configured to operate with keyway 1314. *Id.* at 27:43–46. If a force applied by the user urges the rear shaft to rotate counterclockwise, the bearing assembly prevents that rotation by providing a counter force by the interaction of the key and keyway driving the inner ring rearward, wedging the sprags between the inner ring and outer ring, preventing the counterclockwise rotation of the inner ring and key. *Id.* at 27:43–67.

Other safety devices disclosed include another embodiment of a one-way bearing assembly having snap rings (Ex. 1001, 28:5–63; Fig. 38), a one

way bearing including rollers and sprags (*id.* at 28:65–67), cam-locking systems (*id.* at 29:31–33), "taper locks, a user operated pin system, or a band brake system with a lever" (*id.* at 29:34–35).

D. ILLUSTRATIVE CLAIMS

Of the challenged claims, claims 1, 10, 18, and 21 are independent. Claims 4 and 7–9 depend directly from independent claim 1, claims 11, 12, 14, and 17 depend directly from independent claim 10, claim 20 depends directly from independent claim 18, and claims 22–27 depend, directly or indirectly, from independent claim 21.

Claim 1 is illustrative and is reproduced below with certain reformatting:[2]

> 1. [1.0] A treadmill, comprising:
>
> [1.1] a frame;
>
> [1.2] a front running belt pulley coupled to the frame;
>
> [1.3] a rear running belt pulley coupled to the frame and spaced a distance from the front running belt pulley;
>
> [1.4] a plurality of bearings coupled to the frame;
>
> [1.5] a running belt at least partially supported by at least one of the front running belt pulley and the rear running belt pulley, wherein the running belt includes a running surface, at least a portion of which is curved;
>
> [1.6] a support element coupled to the frame; and
>
> [1.7] a safety device coupled to the running belt, the safety device at least partially supported by the support element, wherein the safety device includes a first safety race element and a second safety race element, wherein at least one of the first and second safety race elements is adapted for rotation relative to the frame,

[2] We apply the same identifiers Petitioner uses to label the different portions of claim 1. Pet. 118 (Claims Listing App'x.).

> and wherein one of the first and second safety race elements substantially surrounds the other of the one of the first and second safety race elements;
>
> [1.8] wherein one of the first and second safety race elements and the running belt freely rotates in a first direction of rotation relative to the frame, however, in a second direction of rotation, opposite the first direction of rotation, the one of the first and second safety race elements is substantially prevented from rotation relative to the frame to substantially prevent rotation of the running belt relative to the frame.

Ex. 1001, 32:60–33:20.

E. References and Testimony

1. Petitioner's Expert

Petitioner relies on the testimony of Dr. Robert Giachetti, Ph.D. P.E. in support of its contentions.

Dr. Giachetti is "a Licensed Professional Engineer in Illinois and Oklahoma" having "over 20 years of experience in Mechanical Engineering." Ex. 1003 ¶ 4. Dr. Giachetti is currently employed as the Director of Mechanical Engineering at Fusion Engineering, LLC, where he is "responsible for providing engineering consulting services in Mechanical and Biomechanical engineering, coordinating client outreach, coordinating marketing materials, and recruiting." *Id.* ¶¶ 5, 6. Prior work experience of Dr. Giachetti comprised working on Biomechanical and Mechanical Engineering projects where he performed experimental studies and "built custom test fixtures that were comprised of typical mechanical power transmission components (e.g., linear actuators, belts, gears, conveyors, springs, bearings, etc.), measured forces and movements generated by humans." *Id.* ¶ 7.

Dr. Giachetti also worked as a teaching assistant with the University of Wisconsin-Madison's Biomechanics laboratory in the Department of Kinesiology where his research "focused on two areas: 1) forces within the knee joint during daily activities, and 2) human balance and the coordination of limb musculature during walking, standing, running, etc." Ex. 1003 ¶ 9; *see also id.* ¶ 10. His "research responsibilities included designing, developing and constructing equipment used to harness participants in efforts to analyze and characterize their lower limb force capabilities during every-day balancing and locomotive tasks," and "involved the use and disassembly of treadmills to characterize force and balance capabilities of participants." *Id.* ¶ 10.

Dr. Giachetti holds Bachelor's, Master's and Ph.D. degrees in Mechanical Engineering and Minors in Physics. Ex. 1003 ¶ 9. Dr. Giachetti also serves on the American Society of Mechanical Engineers (ASME) Power Transmission and Gearing Committee. *Id.* ¶ 12.

2. Patent Owner's Experts

a) Dr. Kim Blair

Patent Owner relies on the testimony of Dr. Kim B. Blair Ph.D. Dr. Blair has "extensive experience utilizing advanced technologies to enhance all aspects of the sporting experience." Ex. 2018 ¶ 42; *see also* Ex. 2044, 1. Dr. Blair currently works as the "Vice President Business Development" at RE:Build Manufacturing where Dr. Blair "[b]uild[s] and develop[s] the business development, marketing, sales and communication teams and processes and go to market strategy for the Engineering and Production Solutions Group" (Ex. 2019, 1) and is the Founder of Sport Technology Innovation & Engineering (STI&E Consulting), providing

"consulting services as STI&E Consulting, including new product development, performance testing of existing and prototype products, and expert witness services on patent litigation cases" (Ex. 2018 ¶ 16; Ex. 2044, 1). Dr. Blair's prior work experience includes Partnering Lead at Cooper Perkins, Inc., Senior Manager at Exponent, Inc., Vice President of Business Development and Operations and the Manager of the Sports Engineering Practice at Cooper Perkins, Inc., Founding Director of the Sports Innovation Program at MIT (now MIT Sports Tech), lecturer in the MIT Aeronautics and Astronautics Department for advanced dynamics and graduate structural dynamics and vibrations, and "senior scientist and management team member at Moldyn, Inc., an organization applying aerospace analysis techniques to the fields of biomechanics and computational chemistry." Ex. 2018 ¶¶ 2, 9, 10; Ex. 2044, 1–3.

"[A]s a member of the board of advisors for emerging companies," Dr. Blair "provided expertise on business and strategic planning, technology assessment and development, strategic alliances, and raising capital." Ex. 2018 ¶ 6. As "[a] recognized expert in innovation and sport technology," Dr. Blair has spoken at institutions and associations, has served as advisors for sports and scientific committees. *Id.* ¶¶ 7, 8, 12. Dr. Blair also "contributed to the design and development of fitness equipment such as the KoKo Smartrainer," is "a co-inventor of a wearable device for assessing running form," U.S. Patent No. 9,642,415 (U.S. Publication No. 20130041617), and has "served as an expert witness on a number of patent litigation cases related to sports equipment, most recently four cases involving treadmills." Ex. 2018, ¶ 17; Ex. 2044, 6.

Dr. Blair received a BA in Psychology and a BS in Mechanical Engineering from the University of Nebraska, as well as a MS in Mechanical

Engineering and a PhD in Aeronautics and Astronautics from Purdue University. Ex. 2018 ¶ 14.

b) Mr. Eric A. Weber

Patent Owner also relies on the testimony of Eric A. Weber, Director of Sales and Marketing for Woodway USA, Inc. since 2004. Mr. Weber states that "[i]n my current position and throughout my tenure with Woodway, I am involved in or have oversight over all decisions pertaining to Woodway's product pricing and strategy." Ex. 2020 ¶ 4.

c) References

Additionally, in the table below we identify the primary references relied upon by Petitioner, as well as the exhibits corresponding to the declaration and deposition testimony in the record for Dr. Giachetti, Mr. Weber, and Dr. Blair.[3]

References and Witness Testimony	Date	Ex. No.
U.S. Patent No. 4,614,337 ("Schonenberger")	Sept. 30, 1986	1010
U.S. Patent No. 5,897,461 ("Socwell")	Apr. 27, 1999	1011
U.S. Patent No. 5,538,489 ("Magid")	July 23, 1996	1012
Neil Sclater and Nicholas P. Chironis, Mechanisms & Mechanical Devices Sourcebook, Third Ed., (McGraw-Hill 2001) ("Sclater")	2001	1017
Declaration of Robert Giachetti	Apr. 13, 2023	1003
Second Declaration of Robert Giachetti	Apr. 24, 2024	1036

[3] The table identifies only a select number of documents particularly pertinent to this Decision. A complete identification of the papers and exhibits that form the record of this case is available in the docket of this proceeding. *See also, e.g.*, PO Resp., iii (Patent Owner's List of Exhibits); Pet. Reply, v (Petitioner's Updated Exhibit List).

Deposition Transcript of Robert Giachetti	Jan. 10, 2024	Ex. 2023
Declaration of Kim B. Blair	Jan. 31, 2024	Ex. 2018
Deposition Transcript of Kim B. Blair	Apr. 9, 2024	Ex. 1040
Declaration of Eric A. Weber	Jan. 31, 2024	Ex. 2020
Deposition Transcript of Eric A. Weber	Mar. 19, 2024	Ex. 1037

F. ASSERTED GROUNDS OF UNPATENTABILITY

Petitioner challenges the patentability of claims 1, 4, 7–12, 14, 17, 18, and 20–27 on the following grounds (Pet. 4):

Claims Challenged	35 U.S.C. §	References/Basis
1, 4, 7–12, 14, 17, 18, 20–27	103	Schonenberger, Socwell, Magid, Sclater
1, 4, 7–12, 14, 17, 18, 20–27	103	Schonenberger, Socwell, Magid, Sclater
1, 4, 7–12, 14, 17, 18, 20–25	103	Socwell, Magid, Sclater

II. ANALYSIS

A. LEGAL STANDARDS

Petitioner bears the burden of establishing the unpatentability of the challenged claims by a preponderance of the evidence. 35 U.S.C. § 316(e); 37 C.F.R. § 42.1(d). This burden of persuasion never shifts to Patent Owner. *Dynamic Drinkware, LLC v. Nat'l Graphics, Inc.*, 800 F.3d 1375, 1378 (Fed. Cir. 2015).

Whether the Challenged Claims would have been obvious over the cited references is at issue in this proceeding. A patent claim is unpatentable under 35 U.S.C. § 103(a) if the differences between the claimed subject matter and the prior art are "such that the subject matter as a whole would have been obvious at the time the invention was made to a person having

ordinary skill in the art to which said subject matter pertains." *KSR Int'l Co. v. Teleflex Inc.*, 550 U.S. 398, 406 (2007). The legal question of obviousness is resolved on the basis of underlying factual determinations including (1) the scope and content of the prior art; (2) any differences between the claimed subject matter and the prior art; (3) the level of ordinary skill in the art; and (4) when in evidence, objective evidence of obviousness or nonobviousness.[4] *Graham v. John Deere Co. of Kansas City*, 383 U.S. 1, 17–18 (1966). Whether a patent claiming the combination of prior art elements would have been obvious is determined by "whether the improvement is more than the predictable use of prior art elements according to their established functions." *KSR*, 550 U.S. at 417. One seeking to establish obviousness based on more than one reference also must articulate sufficient reasoning with rational underpinnings to combine teachings. *See Id.* at 418.

To show obviousness, it is not enough to merely show that the prior art includes separate references covering each separate limitation in a challenged claim. *Unigene Labs., Inc. v. Apotex, Inc.*, 655 F.3d 1352, 1360 (Fed. Cir. 2011). "This is so because inventions in most, if not all, instances rely upon building blocks long since uncovered, and claimed discoveries almost of necessity will be combinations of what, in some sense, is already known." *KSR*, 550 U.S. at 418–419. Moreover, in determining the differences between the prior art and the claims, the question under 35 U.S.C. § 103 is not whether the differences themselves would have been obvious, but whether the claimed invention as a whole would have been

[4] The record does not include allegations or evidence of objective indicia of obviousness or nonobviousness.

obvious. *Litton Indus. Prods., Inc. v. Solid State Sys. Corp.*, 755 F.2d 158, 164 (Fed. Cir. 1985) ("It is elementary that the claimed invention must be considered as a whole in deciding the question of obviousness."); *see also Stratoflex, Inc. v. Aeroquip Corp.*, 713 F.2d 1530, 1537 (Fed. Cir. 1983) ("[T]he question under 35 U.S.C. § 103 is not whether the differences *themselves* would have been obvious. Consideration of differences, like each of the findings set forth in *Graham*, is but an aid in reaching the ultimate determination of whether the claimed invention as a whole would have been obvious.").

An obviousness analysis "need not seek out precise teachings directed to the specific subject matter of the challenged claim, for a court can take account of the inferences and creative steps that a person of ordinary skill in the art would employ." *KSR*, 550 U.S. at 418; *accord In re Translogic Tech., Inc.*, 504 F.3d 1249, 1259 (Fed. Cir. 2007). However, a petitioner cannot satisfy its burden of proving obviousness by employing "mere conclusory statements." *In re Magnum Oil Tools Int'l, Ltd.*, 829 F.3d 1364, 1380 (Fed. Cir. 2016). Instead, a petitioner must articulate a reason why a person of ordinary skill in the art would have combined or modified the prior art references. *In re NuVasive, Inc.*, 842 F.3d 1376, 1382 (Fed. Cir. 2016); *see also Metalcraft of Mayville, Inc. v. The Toro Co.*, 848 F.3d 1358, 1366 (Fed. Cir. 2017) ("In determining whether there would have been a motivation to combine prior art references to arrive at the claimed invention, it is insufficient to simply conclude the combination would have been obvious without identifying any reason why a person of skill in the art would have made the combination."); *Belden Inc. v. Berk-Tek LLC*, 805 F.3d 1064, 1073 (Fed. Cir. 2015) ("[O]bviousness concerns whether a skilled artisan not only *could have made* but *would have been motivated to make* the

combinations or modifications of prior art to arrive at the claimed invention.") (citing *InTouch Techs., Inc. v. VGO Commc'ns, Inc.*, 751 F.3d 1327, 1352 (Fed. Cir. 2014)). As a factfinder, we also must be aware "of the distortion caused by hindsight bias and must be cautious of arguments reliant upon *ex post* reasoning." *KSR*, 550 U.S. at 421.

Before we make a final obviousness determination, we must consider the evidence of obviousness in light of any evidence of objective indicia of nonobviousness presented by Patent Owner(also referred to as "secondary considerations"). *See Graham v. John Deere Co.*, 383 U.S. 1, 17–18 (1966) ("Such secondary considerations as commercial success, long felt but unsolved needs, failure of others, etc., might be utilized to give light to the circumstances surrounding the origin of the subject matter sought to be patented. As indicia of obviousness or nonobviousness, these inquiries may have relevancy."); *Transocean Offshore Deepwater Drilling, Inc. v. Maersk Drilling USA, Inc.*, 699 F.3d 1340, 1349 (Fed. Cir. 2012) ("This objective evidence must be 'considered as part of all the evidence, not just when the decisionmaker remains in doubt after reviewing the art.'" (quoting *Stratoflex, Inc. v. Aeroquip Corp.*, 713 F.2d 1530, 1538–39 (Fed. Cir. 1983))). Ultimately, we must weigh Patent Owner's objective evidence in the context of whether the claimed invention as a whole would have been obvious to a skilled artisan. *WBIP, LLC v. Kohler Co.*, 829 F.3d 1317, 1331–32 (Fed. Cir. 2016).

Applying these general principles, we consider the evidence and arguments of the parties.

B. LEVEL OF ORDINARY SKILL IN THE ART

In determining the level of ordinary skill in the art, various non-exhaustive factors may be considered, including: "(1) the educational level of the inventor; (2) type of problems encountered in the art; (3) prior art solutions to those problems; (4) rapidity with which innovations are made; (5) sophistication of the technology; and (6) educational level of active workers in the field." *Daiichi Sankyo Co. v. Apotex, Inc.*, 501 F.3d 1254, 1256 (Fed. Cir. 2007) (quoting *Envtl. Designs, Ltd. v. Union Oil Co.*, 713 F.2d 693, 696 (Fed. Cir. 1983).

Petitioner contends that a person of ordinary skill in the art at the time of the invention ("POSA" or "skilled artisan") "would have had a bachelor's degree in mechanical engineering and at least one year of machine design experience related to power transmission equipment and a demonstrated understanding of the biomechanics of exercise, including knowledge in the field of anthropometry (i.e., the study of human proportion)." Pet. 5 (citing Ex. 1003 ¶¶ 48, 44–49).

Patent Owner contends that a POSA would have had "a bachelor of science degree in mechanical engineering or at least two years of experience in the treadmill industry, including experience and knowledge of the design, construction, testing, and operation of manual treadmills." PO Resp. 3–4 (citing Ex. 2018 ¶¶ 65–70). Patent Owner indicates that its proposed level of skill differs from Petitioner's in that "the level of ordinary skill in the art as articulated by Patent Owner would not exclude certain of the inventors of the '745 patent and is more consistent with the language of the claims." *Id.* at 4; Ex. 2018 ¶ 70 ("as I understand it, certain of the named inventors of the '745 Patent are not degreed engineers."). Patent Owner further contends that "Dr. Blair is an individual of at least ordinary skill in the art under either

standard, and the analysis throughout this Response would not change whether Petitioner or Patent Owner's level of ordinary skill in the art was adopted." *Id.*

Petitioner contends that Patent Owner's "proposed skill level does not address exercise biomechanics, which is important to understand the design of curved treadmills" and that whether Petitioner's proposed skill level would exclude certain of the inventors is not relevant as Patent Owner does not identify any inventors that do not have engineering degrees. Pet. Reply 4–5 (citing Ex. 1036 ¶¶ 17, 18; Ex. 1038, 9:24–10:11).

Both Petitioner and Patent Owner agree that a POSA could have a Bachelor's of Science degree in mechanical engineering degree. *See* Pet. 5; PO Resp. 3–4. The disagreement relates to whether a POSA would also have any further experience and if so, what that further experience would be. The '745 Patent relates to a manual treadmill that includes a "force translation system . . . to translate the forward force created by the user into rotation of the running belt and permit the user to maintain a substantially static fore and aft position on the running belt while running." Ex. 1001, 6:1–6. The translation can be done, for example, by minimizing the friction between the belt and other component of the treadmill or by integrating a non-planar running surface. *Id.* at 6:6–19. As such, the problems, solutions, and sophistication of the technology relate to frictional forces and non-planar surfaces of the specific machine of a treadmill, but not necessarily to specific biomechanics of exercise or human proportion.

We agree with Patent Owner that experience and knowledge of treadmills are required, but the knowledge of exercise biomechanics is not. Ex. 2018 ¶ 70. Thus, based on our consideration of the full record, we find that a person of skill in the art would have a Bachelor's of Science degree in

mechanical engineering and at least one year of experience in the "treadmill industry, including experience and knowledge of the design, construction, testing, and operation of manual treadmills overall." Pet. 5; PO Resp. 3–4. This is a combination of both Petitioner's and Patent Owner's definitions.

However, we note that our analysis and conclusions herein would not change under the Petitioner's or Patent Owner's definitions. The parties also do not indicate that the outcome would differ based on the definition of the person of ordinary skill in the art. *See* Pet. 5; PO Resp. 4; Pet. Reply 4–5.

C. CLAIM CONSTRUCTION

In this *inter partes* review, we apply the same claim construction standard that would be used in a civil action under 35 U.S.C. § 282(b). 37 C.F.R. § 42.100(b). In applying this standard, we generally give claim terms their ordinary and customary meaning as would be understood by a person of ordinary skill in the art at the time of the invention and in the context of the entire patent disclosure. *See id.*; *Phillips v. AWH Corp.*, 415 F.3d 1303, 1312–14 (Fed. Cir. 2005) (en banc). Only those terms in controversy need to be construed, and only to the extent necessary to resolve the controversy. *Realtime Data LLC v. Iancu*, 912 F.3d 1368, 1375 (Fed. Cir. 2019).

In the Petition, Petitioner states that claim terms should be construed according to their ordinary and customary meaning. Pet. 14. In its reply, Petitioner indicates that "[t]he District Court issued its Markman Order (Ex.1033) on November 14, 2023 and construed the terms "substantially prevent[]," "safety device," and "shaft." Pet. Reply. 1–2.

Petitioner contends that "[n]one of these constructions would affect Petitioner's analysis in Grounds 1 and 3 if adopted by the Board." Pet. 2.

Petitioner also argues that Patent Owner incorrectly construed the following terms in Patent Owner's Response: "bearings," "support," and "disposed . . . on." *Id.* (alternation in original).

Patent Owner argues that we "should adopt and apply the constructions provided in the Parallel Litigation." PO Resp. 5. Further, Patent Owner asserts that "the plain and ordinary meanings of 'bearings,' 'support,' and 'disposed on' is consistent with the intrinsic evidence and should be adopted." PO Sur-Reply 3.

We determine that only the terms "safety device" and "bearings" require construction.

1. "safety device"

For the '745 patent, the District Court construed "safety device" as "a device that includes the elements recited [in the claims] and restricts rotation to allow for only one rotational direction of movement."." Ex. 1033, 23.

Both parties agree that we should adopt the District Court's construction. PO Resp. 5; Pet. Reply 2. We, thus, construe "safety device" to encompass "a device that includes the elements recited [in the claims] and restricts rotation to allow for only one rotational direction of movement."

2. "bearings"

Patent Owner contends that the plain and ordinary meaning of the term "bearing" "is simply that 'bearings' must be positioned under the running belt and bear ***at least some*** of the weight of the belt." PO Sur-Reply 4 (citing PO Resp. 18); *see also* PO Resp. 8–9 (contending that a skilled artisan would understand the '745 patent "to require a relative, weight-bearing relationship between the running belt and the plurality of bearings, such that, for a structure to constitute of a plurality of bearings, it

must support the running belt either directly or indirectly and must bear some or all of the weight of the running belt") (citing Ex. 2018 ¶¶ 80–86). Patent Owner contends that the '745 patent distinguishes "rollers" or "wheels" from "bearings." PO Resp. 8–9 (citing Ex. 1001, 22:32–23:25, 23:43–24:13, 24:28–25:14, 26:4–13; Ex. 2018 ¶¶ 80–86). Patent Owner does not offer a definition of "bearing" that relates to its structure. Rather, Patent Owner's proposed definition relates to the position and function of a "bearing."

Petitioner does not proffer what it contends that the plain and ordinary meaning of "bearing" to be in terms of structure, position, or function, but argues that Patent Owner improperly attempts to import limitations from the '745 patent's specification into the claims. Pet. Reply 2. Petitioner contends that "the claims to not expressly require these additional limitations" of being positioned under the running belt and bearing some support of the belt. *Id.* (citing Ex. 1036 ¶ 13).

The '745 patent differentiates the independent claims from each other. *See* Ex. 1001, claims 1, 10, 18, and 21. Claim 1 recites that the treadmill has "a plurality of bearings" and a separate "support element" for the safety device coupled to the treadmill's frame, but does recite any relationship between the bearings and the belt or between the support element and the belt. *Id.* at 32:60–33:20. The treadmill of claim 10 differs from the treadmill of claim 1 in requiring "rotatable elements" that partially support the running belt. *Id.* at 33:52–54. The method of claim 18 requires bearings, as with claim 1, but specifies that the "plurality of bearing define at least a portion of the curved top profile" and "disposing a running belt on the plurality of bearings." *Id.* at 34:30–34. The treadmill of claim 21 provides

for a "rotatable element" at least partially supporting a running belt. *Id.* at 34:59–61.

The plain language of claim 1 recites only that there are bearings coupled to the treadmill frame; there is no further consideration of where, in relation to the belt, the bearings must be. We see no basis for reading into claim 1 a limitation of a preferred embodiment, i.e., the bearings lying below the belt or providing a weight-bearing relationship with the running belt, particularly when the other independent claims further narrow the relationship and function of the bearings to the other treadmill components. *See* Pet. Reply 5; *TurboCare Div. of Demag Delaval Turbomachinery Corp. v. Gen. Elec. Co.*, 264 F.3d 1111, 1123 (Fed. Cir. 2001) (finding it "particularly true" to not read a limitation into the claims where "another claim restricts the invention.").

Thus, we do not construe "bearings" as requiring any particular structure, positioning under the running belt, nor bearing any weight.

3. "disposed . . . on"

Patent Owner contends that the term "disposing a running belt on the plurality of bearings" as recited in claim 18 requires that the bearings be positioned below the belt. PO Resp. 12–13 (citing Ex. 2018 ¶ 97). In response to Petitioner's contention that "the '745 Patent uses 'disposed on' to refer to numerous arrangements, including arrangements that are not physically above" (Pet. Reply 4 (citing Ex. 1001, 13:58–61; Ex. 1036 ¶¶ 16, 25, 26)), Patent Owner asserts that the '745 patent's specification's usage of "disposed on" occurs only once in reference to belts 226 "disposed on opposite side of running belt 16" is consistent with the Patent Owner definition of being below the belt. PO Sur-Reply 7.

The evidence supports Patent Owner's position that the plain and ordinary meaning of the term "disposing a running belt on the plurality of bearings"" is that the belt is above the bearings, i.e., the bearings are below the belt. *See, e.g.,* Ex. 1040, 27:21–23.

4. Summary

To summarize, we construe the following terms:

"safety device" — a device that includes the elements recited in the claims and restricts rotation to allow for only one rotational direction of movement;

"bearings" — an element not requiring any particular structure, positioning under the running belt, nor bearing any weight; and

"disposing a running belt on the plurality of bearings" — the belt being above the bearings.

To the extent necessary, we discuss the meaning of a certain claim term ("running surface") in our analysis below.

We need not construe explicitly any other claim terms to reach our decision. *See Realtime Data*, 912 F.3d at 1375 ("The Board is required to construe 'only those terms . . . that are in controversy, and only to the extent necessary to resolve the controversy.'" (quoting *Vivid Techs., Inc. v. Am. Sci. & Eng'g, Inc.*, 200 F.3d 795, 803 (Fed. Cir. 1999))).

D. SCOPE AND CONTENT OF THE PRIOR ART

1. Overview of Schonenberger – Exhibit 1010

Schonenberger discloses a preferably power-driven "movable surface apparatus, typically for physical exercise and training." Ex. 1010, Abstr., 1:63–65, 4:1–3. One objective of Schonenberger's invention is to provide an apparatus that "is safe in operation and requires little operating power,

has low noise level in operation." *Id.* at 1:65–66. Another objective is to provide an apparatus having

> a pleasant, springy feel when being stepped or jumped on without, however, being excessively stressed by bending or bowing, so that the surface which is engaged by the foot of the user will have, essentially, the characteristics of a yielding, yet firm support similar, for example, to walking on moss-covered ground or a needle-covered path.

Id. at 1:67–2:5.

One embodiment of Schonenberger's physical exercise apparatus is shown in Figures 1 and 2, which are reproduced below.

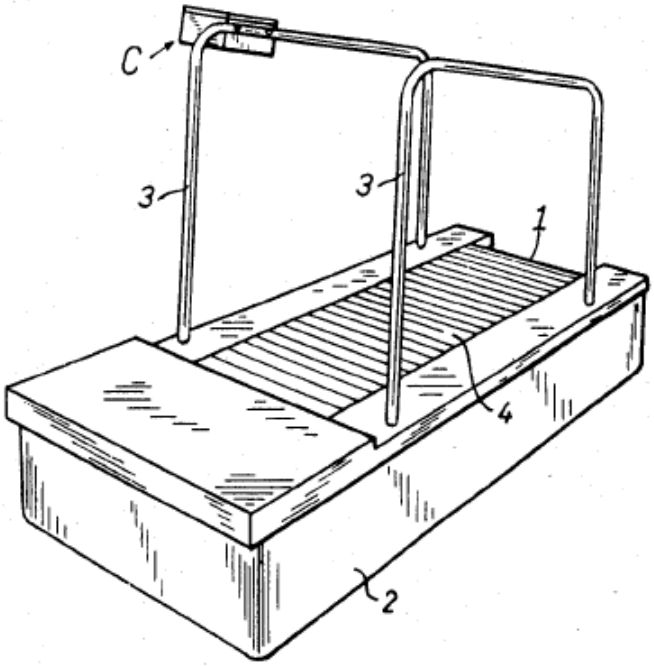

Schonenberger's Figure 1 is a general perspective view of the apparatus arranged for training and physical exercise. Ex. 1010, 2:67–68. Schonenberger's physical exercise apparatus includes a motor 33 (not shown in Figure 1) that drives movable surface 1. *Id.* at 4:1–3. "The apparatus is enclosed in a housing 2 to which also support bars 3 are secured" and "[a] control unit C is mounted on one of the support bars to control operation of

the motor, for example its starting, stopping, and operating speed." *Id.* at 4:5–9. Slats 4 are secured to toothed belts by means of rivets to form endless surface 1, are preferably of lightweight material, extend transversely to the running direction, distanced so that "only little space or clearance is left between the slats-just enough to prevent interference of adjacent slats upon movement," and have an upper surface that "is covered with an impact-reducing cover." *Id.* at 4:38–66.

Figure 2, reproduced below, "is a fragmentary schematic side view of the movable surface and its drive arrangement, with the housing removed." Ex. 1010, 3:1–3.

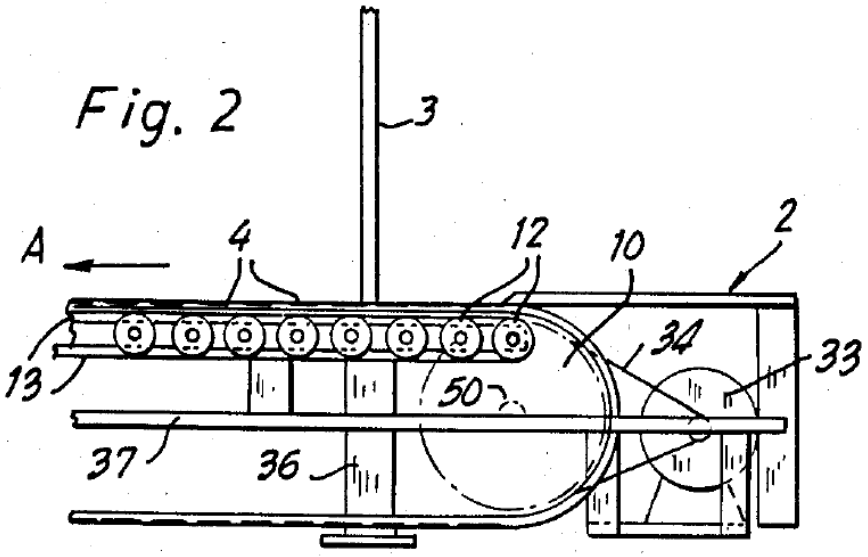

Schonenberger's Figure 2 "is a fragmentary schematic side view of the movable surface and its drive arrangement, with the housing removed." Ex. 1010, 3:1–3. Figure 2 shows housing 2 including frame members 36 and 37, slats 4, rotatable elements 10, support rollers 12, support belt 13, motor 33, and drive belt 34. *Id.* at 4:10–5:3. As shown in Figure 2, housing 2 includes frame members 36 and 37 that provide for physical and structural support, and, preferably rotatable drums, although "rollers, sheaves, sprockets, or the like" can be used, "about which the surface 1,

which is an endless loop, is placed." *Id.* at 4:15–17. The "drums or rollers 10[] are suitably journalled in the frame as seen at 50." *Id.* at 4:17–20. Alternatively, two sheaves, drums, or pulleys 10 having a toothed or ribbed circumference can be used and would be "provided at either end of the apparatus, one will be located at either side thereof, suitably journalled and, connected by a transverse shaft 26," and engaged with two endless gear belts 5 having internally projecting teeth. *Id.* at 4:20–27. This "ensur[es] slipless, positive common drive of both of the toothed belts 5 in the operating direction and preventing lateral dislocation of the endless loop as shown by Arrow A in FIG. 2." *Id.* at 4:29–32.

"Support rollers 12 are provided to prevent bending-through of the belts 5 upon loading of the step by a person." *Id.* at 4:67–5:1. "[S]upport belt 13 is positioned between the upper sides of support rollers 12 and the lower side of the slats 4." *Id.* at 5:1–3. Thus, slats 4 are supported at their ends by support rollers 12. *Id.* at 5:3–5. Belts 13 absorb the steps and eliminate all vibrations caused by the rollers (*id.* at 5:9–18) and are "looped about support rollers 12 at the end in a very loose or slack manner, which minimizes the power" (*id.* at 6:7–9). Rollers 12 "support the upper run of the movable surface 1, with the cushioned support belt 13 interposed, and are present throughout at least the entire useful length of the support surface." *Id.* at 5:27–30. The diameter of the rollers 12 is less than the diameter of drums 10. *Id.* at 5:30–32. "The support rollers 12, 12' are journaled by means of low-friction bearings." *Id.* at 5:47–49.

Another embodiment of Schonenberger's treadmill is depicted in Figures 10 and 10a, reproduced below.

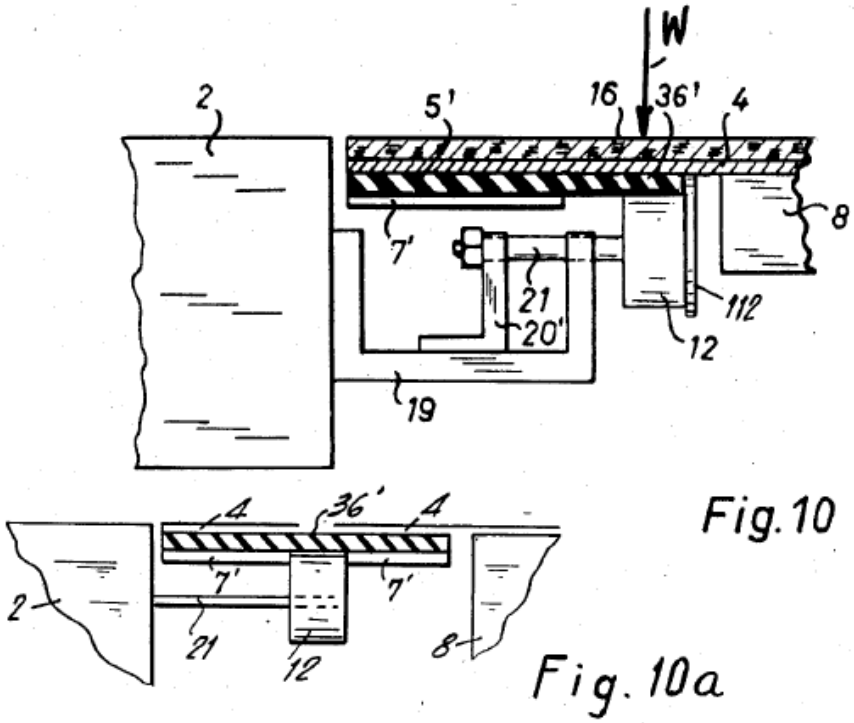

Fig. 10

Fig. 10a

Schonenberger's Figures 10 and 10a are "fragmentary, part sectional view[s] of another embodiment . . . showing support of slats with lateral guidance effects by the structure of the supporting and cushioning belt." Ex. 1010, 3:21–27. Figure 10 depicts an embodiment where the "resilient, elastic cushion support 5 has been replaced by a belt 5' which has a toothed or ribbed section 7' similar to the ribbed belt 5 with teeth 7, and a smooth portion 36', against which support roller 12 can bear." *Id.* at 8:34–38. In this embodiment, belt 5' provides the cushioning support and longitudinal stiffness to hold the slats 4 in adjacent alignment, and rollers 12, 12' are carried on shafts 21 secured to bracket 19 attached to sidewall 2 of the apparatus. *Id.* at 8:34–47. Figure 10 "illustrates the belt 5' in engagement with roller 12, that is, the condition when the slat 4 is loaded, for example by the weight of a user," as indicated by weight arrow W. *Id.* at 8:58–61. "When unloaded, rollers 12 and belt 5' are partially spaced." *Id.* at 8:61–62.

Figure 10a depicts rollers 12 supporting belt 5' having on either side of rollers 12 lateral toothed or ribbed sections 7' to prevent lateral dislocation of slat 4. Ex. 1010, 8:63–65. Rollers 12 are directly secured to the frame by bolts 21. *Id.* at 8:65–67.

Schonenberger's Figure 12, reproduced below, "is a highly schematic representation of the arrangement of the support to provide a soft, resilient step-on feel." Ex. 1010, 3:31–33.

FIG.12

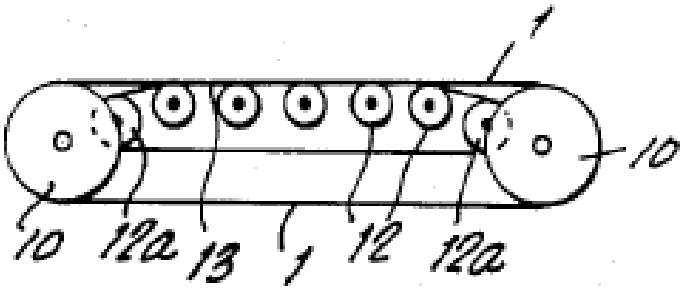

Figure 12 illustrates terminal rollers 12a "positioned slightly lower than the remaining rollers 12." Ex. 1010, 7:38–40. The terminal rollers 12a may be slightly larger than the other rollers to decrease the noise level and power requirements. *Id.* at 7:41–45. End drums or rollers 10 have a width just enough to engage belt 5, and "since their axes are below those of the bolts 21, they can be located to partly overlap the curvature of the terminal roller 12a [as shown in Figure 12] without interference." *Id.* at 9:3–9.

Figure 19 of Schonenberger, reproduced below, "is a highly schematic top view of the support and drive arrangement for the running surface, with the running surface itself removed." Ex. 1010, 3:51–53.

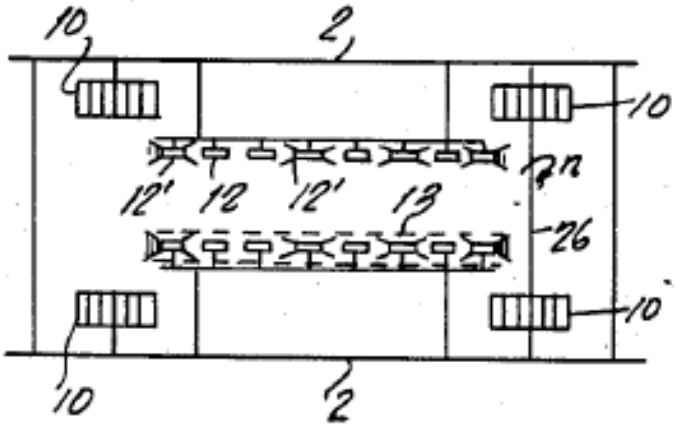

FIG. 19

Figure 19 "shows, highly schematically, a top view of the arrangement of the end pulleys 10 in the form of sprockets located on the frame 2, shown only schematically." Ex. 1010, 11:50–53. Figure 19 shows support V-rollers 12' (which can be a mix of flat and flanged or V-rollers) and adjacent rollers 12 that are supported by frame 2's supporting rails. *Id.* at 11:21–58. "From the upper run, a showing of the belt 13 or 13' has been omitted," and in the lower run, "belt 13 is shown in broken lines." *Id.* at 11:58–61. Wheels 10 can be driven by a motor. *Id.* at 11:63–65.

2. Overview of Socwell – Exhibit 1011

Socwell discloses "[a] curved deck treadmill." Ex. 1011, Abstr. Socwell discloses that an objective of the invention is "to provide a novel curved deck treadmill which provides a structurally supported arcuate shaped, movable surface on which a user may exercise." *Id.* at 3:26–29.

Socwell's curved deck treadmill is shown in Figure 1, which is reproduced below.

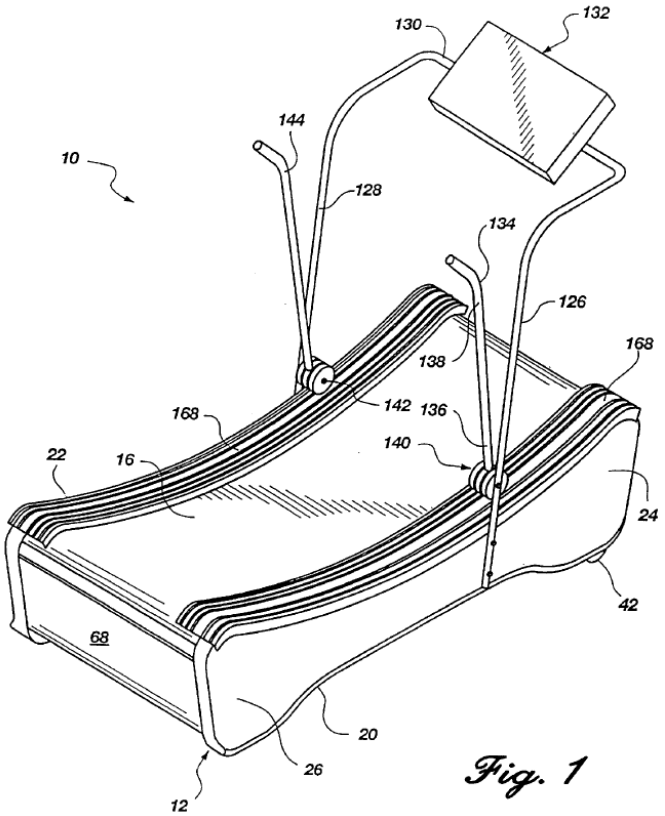

Socwell's Figure 1 "is a perspective view of one presently preferred embodiment of a curved deck treadmill." Ex. 1011, 4:35–36. As shown in Figure 1, Socwell's curved deck treadmill 10 comprises a support frame 12 having a first side 20 and a second opposing side 22 and having a deck 56 supportably disposed therebetween, as shown in Figure 2, which is reproduced below.

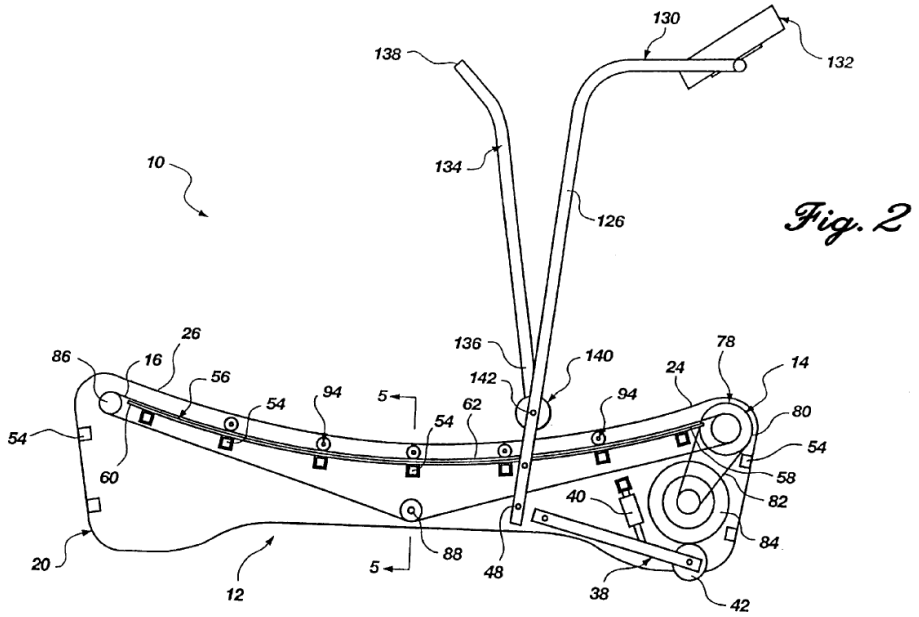

Socwell's Figure 2 "is a side elevational view of the embodiment of [Figure 1] exposing one presently preferred arrangement of the internal components of the present invention." Ex. 1011, 4:38–40. Socwell discloses that in a "preferred construction, the deck 56 comprises a first end 58, a second end 60, and an intermediate portion 62 disposed therebetween." *Id.* at 5:26–28. As shown in Figure 2, "a roller assembly 14 is provided preferably comprising a first and second roller 78, 86," and "[t]he first roller 78 may be rotatably disposed contiguous the first end 58 of the deck 56 between the first side 20 and the second opposing side 22 of the support frame 12." *Id.* at 5:33–38. Support frame 12 comprises a "first side 20 and a second opposing side 22 which, in combination, provide a means for structurally supporting the curved deck treadmill 10 and the various components thereof." *Id.* at 5:57–61. Belt 16 is disposed in relation to rollers 78, 86, and 88, and is supported by belt securing assemblies 94 that "provide a means for substantially conforming the inherent flexible nature of the belt 16 to the arcuate configuration of the intermediate portion 62 of the

deck 56." *Id.* at7:31–34, 10:5–12. Deck 56 is preferably "formed of a substantially sturdy, rigid material to provide sufficient structural integrity to adequately support the weight of a user exercising on the curved deck treadmill 10," and is supported by support ribs 54 having an elongated configuration. *Id.* at 8:8–11, 8:35–42, 8:58–60. In an embodiment, the curved deck treadmill may be implemented without a driving means such as a motor. *Id.* at 11:54–60.

Socwell's Figure 5, reproduced below, "is an exploded, fragmentary cross-sectional view of the embodiment of FIG. 2 taken along lines 5-5 of FIG. 2." Ex. 1011, 4:45–47.

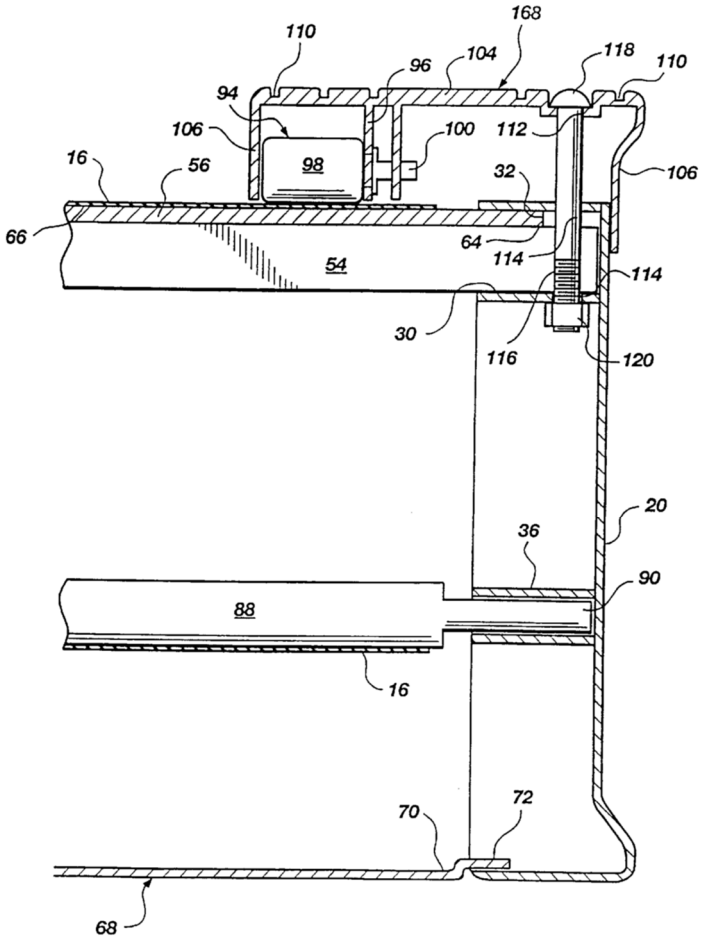

Fig. 5

Figure 5 depicts curved deck treadmill 10 including one or more belt securing assemblies 94 for retaining belt 16 "in a curvilinear configuration being substantially flush with the upper surface 66 of the deck 56" and "for substantially conforming the inherent flexible nature of the belt 16 to the arcuate configuration of the intermediate portion 62 of the deck 56." Ex. 1011, 10:5–12. Belt securing assembly 94 comprises roller 98 "having an axle 100 which rotatably engages a mounting bracket 96." *Id.* at 10:17–20. As belt 16 rotates, rollers 98 would rotate in relation to belt 16. *Id.* at 10:24–26.

3. Overview of Magid – Exhibit 1012

Magid discloses a non-motorized "walker apparatus which prevents the action of the user's left foot from influencing the action of his right foot and vice-versa when the walker apparatus is in use." Ex. 1012, 1:17–20.

Figure 2 of Magid, reproduced below, depicts a first preferred embodiment of a walker apparatus.

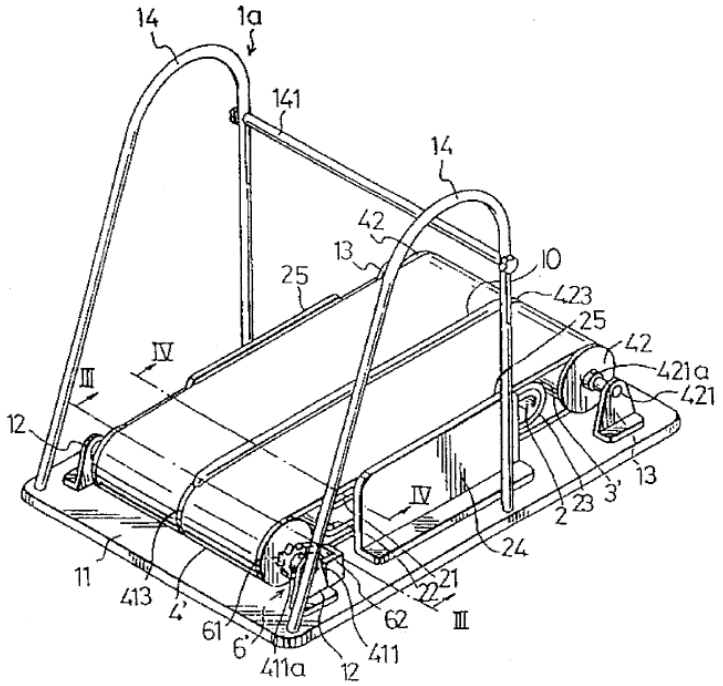

Magid's Figure 2 "is a perspective view of the first preferred embodiment of a walker apparatus." Ex. 1012, 3:40–42. The walker apparatus shown in Figure 2 comprises "a base 11, a pair of front rollers 41, a pair of rear rollers 42, endless left and right foot belts 4, 4', and a support unit." *Id.* at 4:12–16. Unidirectional control means 6, 6' permits only unidirectional movement of belts 4, 4' and, in one embodiment, includes ratchet gears 61 attached to the front rollers and mounted rotatably on shaft 411. *Id.* at 4:47–51. Control means 6, 6' also includes pawls 62 secured to base 11 that engage one of ratchet gears 61 to permit only unidirectional rotation of front roller 41 or rear rollers 42 and to prevent bidirectional movement of belts 4, 4'. *Id*. at 4:51–60.

Figure 9 is reproduced below.

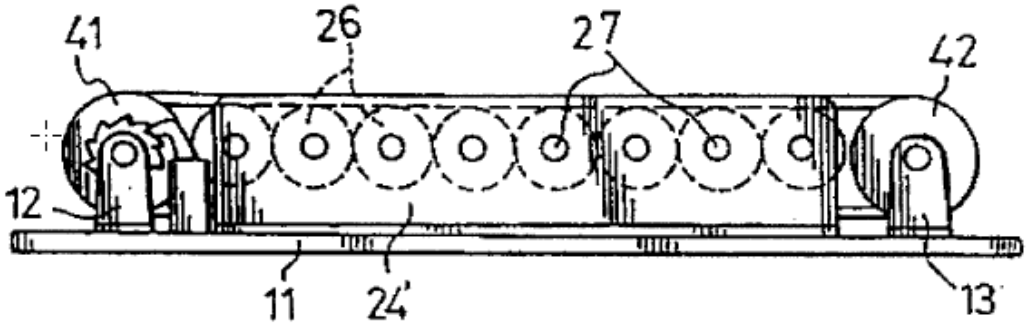

Magid's Figure 9 "is a schematic side view of the second preferred embodiment" of a walker apparatus. Ex. 1012, 3:66–67. The main difference between the first embodiment shown in Figure 2 and the second embodiment shown in Figure 9 is in the configuration of the support unit. *Id. at* 6:46–53. In Figure 9's embodiment, each belt 4, 4' is "wound circulatively on the respective one of the front rollers 41 and on the respective one of the rear rollers 42, and the support unit includes a plurality

of adjacent parallel third shafts 27 between the front and rear rollers 41, 42'." *Id.* at 6:54–58.

4. Overview of Sclater – Exhibit 1017

Sclater is titled "Mechanisms and Mechanical Devices Sourcebook, Third Edition." Ex. 1017, 1.[5] Chapter 9 of Sclater is titled "Coupling, Clutching, and Braking Devices." *Id.* at 4. On pages 5–6 of Exhibit 1017 (internal numbers 302–303), Sclater describes twelve basic mechanical friction and mechanical clutches including, in part, a pawl and ratchet external control clutch and cam and roller clutch. A pawl and ratchet clutch is described as one where the driving ratchet "is keyed to the driving shaft, and the pawl is pinned to the driven gear which can rotate freely on the driving shaft." *Id.* at 5 (internal page 302). When the control arm is raised, the spring pulls in the pawl to engage the ratchet and drive the gear." *Id.* A cam and roller clutch is described as "an over-running clutch [that] is better suited for higher-speed free-wheeling than a pawl-and-ratchet clutch." *Id.* at 6 (internal page 303). In the cam and roller clutch,

> [t]he inner driving member has cam surfaces on its outer rim that hold light springs that force the rollers to wedge between the cam surfaces and the inner cylindrical face of the driven member. While driving, friction rather than springs force the rollers to wedge tightly between the members to provide positive clockwise drive. The springs ensure fast clutching action. If the driven member should begin to run ahead of the driver, friction will force the rollers out of their tightly wedged positions and the clutch will slip.

Id.

[5] We refer to page numbers added to Exhibit 1017 starting with the front cover as page 1.

Sclater also discusses seven overrunning clutches including a molded sprags clutch indicated as being "for light duty" and an "internal ratchet and spring-loaded pawls" clutch. Ex. 1017, 7 (internal page 311). On page 8 of Exhibit 1017 (internal page 312), Sclater discusses spring-loaded pins aiding sprags in a one-way clutch and describes that as having "[s]prags combined with cylindrical rollers in a bearing assembly [that] can provide a simple, low-cost method of meeting the torque requirements of most machine applications" and can serve as a roller bearing, and that the clutch's torque rating depends on the number of sprags.

Sclater further provides "details of overriding clutches" and explains a friction clutch is quieter than a ratchet and pawl but requires a spring device to keep the pawl in constant engagement. Ex. 1017, 9 (internal page 316) (capitalization omitted). In discussing ten ways to apply overrunning clutches, Sclater explains that "[t]hese clutches allow freewheeling, indexing and backstopping," and "they will solve many design problems." *Id.* at 11 (internal page 318). Among the depicted examples of clutches is Figure 1 (*id.*), reproduced below, which depicts precision sprags. Sclater discusses that in this formsprag clutch, torque is transmitted from one race to another by the wedging actions of sprags between the raced in one direction and in the other direction, the race freewheels. *Id.*

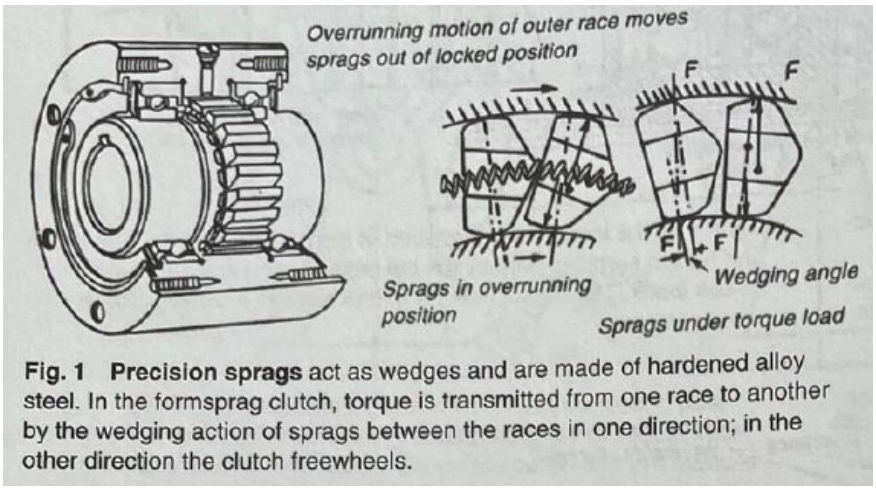

Fig. 1 Precision sprags act as wedges and are made of hardened alloy steel. In the formsprag clutch, torque is transmitted from one race to another by the wedging action of sprags between the races in one direction; in the other direction the clutch freewheels.

Figure 1 of Sclater's Chapter 9 illustrates "precision sprags" which are an example of overrunning clutches. Ex. 1017, 11 (internal page 318). Sclater states that applications for sprag-type clutches "include overrunning, backstopping, and indexing" and the selection of an overrunning sprag clutch "requires a review of the torque to be transmitted, overrunning speed, type of lubrication, mounting characteristics, environment conditions, and shock conditions that might be encountered." *Id.* at 13 (internal page 320). For backstopping, Sclater's Figure 2, reproduced below, depicts a vertical conveyor transporting buckets and having a clutch mounted on the headshaft whereby if power to the conveyor is interrupted, the clutch "will prevent the buckets from running backwards and dumping the load." *Id.*

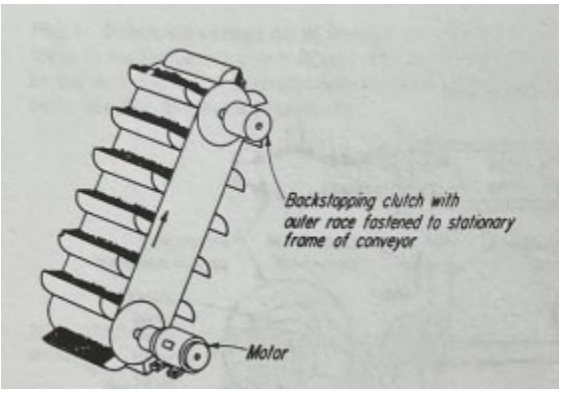

Sclater's Figure 2 depicts a vertical conveyor carrying buckets and having a motor and a backstopping clutch with an outer race fastened to the stationary frame of the conveyor. Ex. 1017, 13 (internal page 320).

E. GROUND 1 – ALLEGED OBVIOUSNESS OVER SCHONENBERGER, SOCWELL, MAGID, AND SCLATER – CLAIMS 1, 4, 7–12, 14, 17, 18, AND 20–27

1. Discussion

Petitioner challenges claims 1, 4, 7–12, 14, 17, 18, and 20–27 as unpatentable under 35 U.S.C. § 103 over Schonenberger, Socwell, Magid, and Sclater. Pet. 21–68. Petitioner groups independent claims 1, 10, 18, and 21 together. *Id.* at 21–57. We address independent claim 1 and note where independent claims 10, 18, and 21 differ.

Petitioner asserts that Schonenberger discloses a treadmill comprising a frame having front and rear ends, and a front pulley, a rear belt pulley, bearings, and a support element coupled to the frame. Pet. 21–28, 41. Petitioner also asserts that Socwell discloses a running belt partially supported by a pulley, the belt having a running surface of which at least a portion is curved, and that a person of ordinary skill in the art would have had motivation to combine Socwell's teachings with Schonenberger, as well as a reasonable expectation of success in doing so. *Id.* at 29–41. Further, Petitioner alleges that Magid discloses a safety device coupled to the running belt and at least partially supported by the support element, and Sclater discloses inner and outer race elements, one of which is prevented from rotating in a second direction opposite a first direction of rotation and wherein one of the elements substantially surrounds the other. *Id.* at 41–46. Petitioner contends that a person of ordinary skill in the art would have had motivation to combine Magid's teaching with Schonenberger's treadmill as

modified by Socwell and to combine Sclater's teachings with the Schonenberger's treadmill as modified by Socwell and Magid well as a reasonable expectation of success in doing so. *Id.* at 46–57. Petitioner maps the disclosures of Schonenberger, Socwell, Magid, and Sclater to the challenged claims. *Id.* at 21–57.

Patent Owner disputes Petitioner's position that claims 1, 4, 7–12, 14, 17, 18, and 20–27 would have been obvious over Schonenberger, Socwell, Magid, and Sclater. PO Resp. 14–51. Patent Owner contends "Petitioner's asserted motivations to combine amount to little more than just picking and choosing aspects of alleged prior art to attempt to satisfy the claim elements" (Paper 5 ("POPR") 5) and that Petitioner "attempts to cobble together multiple disparate references, arbitrarily selecting various elements of those references until it arrives at something that superficially resembles the Challenged Claims" (PO Resp. 6).

The Parties' arguments raise a number of different disputes regarding Petitioner's contention that claim 1 would have been obvious over Schonenberger, Socwell, Magid, and Sclater. These arguments relate to whether Petitioner has adequately shown that: (1) Socwell discloses the claimed "plurality of bearings" (PO Resp. 7–14); (2) a person of ordinary skill would have been motivated to modify "the flat running surface of Schonenberger according to the curved running service of Socwell" (*id.* at 14–34) (3) a person of ordinary skill in the art would have been motivated to combine Magid with Socwell or Schonenberger (*id.* at 34–39); and (4) a person of ordinary skill would have been motivated to combine the purported teachings of Schonenberger, Socwell, Magid, and Sclater to meet the claimed "safety means" (*id.* at 39–51).

Because we find it dispositive, we focus our discussion on the dispute regarding Petitioner's contention that one of ordinary skill in the art would have known and been motivated to modify Schonenberger's flat treadmill with Socwell's curved treadmill to teach a "running belt includ[ing] a running surface, at least a portion of which is curved," as recited in independent claims 1, 10, and 21, "the bearings defin[ing] at least a portion of a curved running surface of the running belt," as recited in independent claim 18.

2. Petitioner's Proposed Modification

Petitioner first contends that Schonenberger's Figure 12 discloses bearings 12 and 12a that define a curved top profile. Pet. 29. Petitioner then alleges that Schonenberger discloses a running belt, movable surface 1, formed of slats 4 secured to belt 5 and supported by pulleys 10 and rollers 12. *Id.* at 30–31 (citing Ex. 1010, 2:6–9, 4:10–17, 4:38–41, 8:34–44, Fig. 12; Ex. 1003 ¶¶ 139–144, 223–225, 261, 248–250). According to Petitioner, slats 4 are "cushioning material or cover 16 that forms the running surface." *Id.* at 30 (citing Ex. 1010, 4:57–66). Further, Petitioner asserts that Schonenberger's roller 12, 12' are mounted to the sidewalls of housing 2, the framing, with brackets 10. *Id.*

For the running surface having a curved portion, Petitioner cites to Socwell that "discloses a 'novel <u>curved deck treadmill</u> which provides a structurally supported arcuate shaped, moveable surface on which a user may exercise.'" Pet. 32 (quoting Ex. 1011, 3:27–29 and citing Ex. 1011, 3:25–26, Fig. 1; Ex. 1003 ¶ 145).

Petitioner asserts that "[i]n both Schonenberger and Socwell, the running surface is supported from underneath by bearings: rollers 12 in

Schonenberger; and a linear bearing, curved deck 56, combined with rotary bearings, rollers 94 in Socwell." Pet. 36 (citing Ex. 1011, 10:5–12). Petitioner contends that a person of ordinary skill in the art "would have understood that by arranging the rollers 12 of Schonenberger in a curved alignment, similar to the curved deck 56 of Socwell, a curved running surface would result." *Id.* (citing Ex. 1003 ¶ 154; Ex. 1010, 7:37–41, Fig. 12). This modification, according to Petitioner, would comprise lowering Schonenberger's rollers 1, mounted to the sidewalls of housing 2 with brackets 19, such that movable surface 1 comprising heavy, interconnected, and movable slats 4 would conform to the profile of the lowered rollers 12, as shown below in Petitioner's modified Figure 12 of Schonenberger ("Petitioner's modified Figure 12"). *Id.* at 36–38.

Ex.1010, Fig.12

Petitioner's modified Figure 12 depicts Petitioner's assertion that lowered rollers 12 in red cause the running belt in green to be lowered, conformed to the rollers 12, and having a curved top profile such that there is a curved running surface.

Petitioner then asserts that a skilled artisan would have known how to modify Schonenberger's "brackets 19 to have a curved shape to arrange the rollers 12 in a curved top profile," as depicted in Petitioner's modified

Figure 12. Pet. 40; *see also* Ex. 2023, 39:5–13 (Dr. Giachetti explaining that "the modification is basically, instead of having the rollers 12 be above the centerline of 12a, they would then be below it. And that's a straightforward and simple modification."). According to the Petitioner, this "modification would be the use of a known technique – using a curvilinear arrangement of bearings, as taught by Socwell – to improve similar devices (treadmills), in the same way, i.e., to produce a curved running surface." Pet. 40.

Petitioner asserts that the only difference between Schonenberger's and Socwell's "structural side members that support bearings" is the shape in which the rollers are aligned – Schonenberger's rollers 12 being arranged in a straight line and Socwell's rollers 98 "arranged in a curved profile and has a corresponding curved deck for supporting the belt 16 from underneath." Pet. 40 (citing Ex. 1003 ¶ 159). Thus, Petitioner contends, a skilled artisan "would have understood the brackets 19 of Schonenberger could have been curved like the cover members 168 of Socwell and the rollers 12 of Schonenberger could have been arranged in a curved profile like the rollers 98 of Socwell," resulting in the movable surface 1 of Schonenberger being curved with a central portion of the belt being lower than the front and rear portions, as shown in Petitioner's modified Figure 1 of Schonenberger, shown below. *Id.* at 40–41; *see also* Pet. Reply 6 ("a POSA would have known how to modify placement of the plurality of roller bearings 12 of Schonenberger to be curvilinear, like the curved, plain bearing (deck 56) of Socwell, resulting in curved running surface to increase safety and reduce impact loading of the user's joints."). As such, Petitioner contends, "it would have been obvious to arrange the rollers 12 curvilinearly like the curved deck 56 of Socwell." Pet. Reply 7 (citing Ex. 1036 ¶ 32).

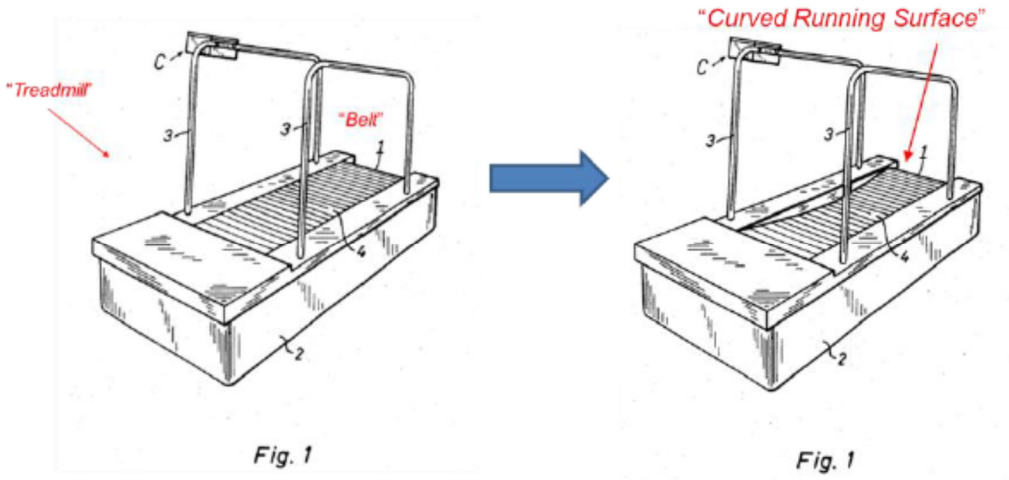

Figure 1 on the left shows Schonenberger's original treadmill having a flat, non-curved surface ("belt"). Figure 1 on the right shows Petitioner's rendition of the resulting Schonenberger's treadmill when modified by Socwell. Pet. 41.

Petitioner provides multiple reasons why "[i]t would have been obvious to POSA to modify Schonenberger's brackets 19 and rollers 12, 12' ('*plurality of bearings*') to provide a curved support surface such that the movable surface 1 ('*running surface*') 'follows a curved running surface' as taught by Socwell." Pet. 32. Petitioner reasons that "[i]t would have been obvious to a POSA to combine the flat manual treadmill topology of Schonenberger with the curved manual treadmill topology of Socwell" so as to "increase safety," "reduce impact loading of the user's joints," provide "a more comfortable treadmill," and provide "a more versatile treadmill that can be used for exercise and rehabilitation." *Id.* at 33–36 (citing Ex. 1011, 2:11–29, 2:45–67, 3:1–9, 3:53–57, 13:43–47; Ex. 1003 ¶¶ 148, 153; Ex. 1010, 4:1–6).

3. Patent Owner's Contentions

Patent Owner contends that Socwell does not disclose a plurality of bearings such that a skilled artisan would have been motivated to combine Socwell and Schonenberger as Petitioner proposed. PO Resp. 15. Patent Owner also argues that Petitioner's modified Schonenberger treadmill does not have a curved running surface because "Schonenberger does not disclose rollers arranged 'along a curved profile'" (*id.* at 16 (bolding omitted)), "[f]lipping Schonenberger's rollers 12 does not result in a curved running surface" (*id.* at 21 (bolding omitted)), and "Schonenberger effectively teaches away from the proposed modifications" (*id.* at 31 (bolding omitted)).

First, Patent Owner alleges that Schonenberger "describes the rollers as being arranged to have a substantially flat profile even when the terminal rollers are positioned below the remaining rollers." PO Resp. 17. Patent Owner contends that in Figure 12, Schonenberger's "rollers do not form a curved top profile at all;" rather, Schonenberger's device has "a flat top surface" that is supported by support belts 13, 13' positions parallel to the top surface such that "***there is practically no bowing or hanging-through of the belts 5 [the form surface 1] since downward vertical forces applied to the step slats 4 are accepted by the rollers 12.*** Thus, ***the surface is practically flat*** while being slightly springy and resembles that of a natural soft grass, or other soft surface athletic track." *Id.* at 18–19 (quoting Ex. 1010, 5:51–6:4 (adding emphases and bracketing)). Patent Owner argues that Schonenberger's Figures 2 and 12 "confirm[] that the top profile formed by the rollers must be substantially flat or planar." *Id.* at 19 (citing Ex. 1010, Figs. 2, 12).

Second, Patent Owner asserts that "simply flipping the orientation of the terminal rollers such that they are positioned above the remaining rollers

does not transform this profile into a curve." PO Resp. 17, 21. Patent Owner alleges that a skilled artisan would expect that the lower profile formed by rollers 12 is "substantially flat or planar" as they "are all identical size and shape." *Id.* at 21–22 (citing Ex. 1010, Fig. 12). Further, Patent Owner contends that "[e]ven assuming *arguendo* that the slats that form running belt 1 are flexible enough and sufficiently spaced apart to allow gravity to bring them into contact with a series of lowered rollers," the central portion of the running belt 1 that forms the running surface "where a user would actually stand, walk, or run when using the treadmill, would still be substantially flat." *Id.* at 22–23 (citing Ex. 2018 ¶ 125); *see also id.* at 23–24. Patent Owner asserts that a skilled artisan "would immediately recognize that Petitioner's proposed modification provides a flat running surface with steep and unusable planed surface near each of the drum rollers" such that "Petitioner's proposed modification still leaves a flat running surface." *Id.* at 25–28.

Third, Patent Owner contends that to the extent Petitioner's "intention was for the rollers 12 to be in a[n] arc/curved orientation (similar to the arc/curve of the securing assemblies 94 in Socwell) a POSA would not have known how to use such curvature in the rollers 12 of Schonenberger." PO Resp. 28. Patent Owner asserts that Schonenberger's slats under its running surface that provide the needed support for the running surface are not present in Socwell. *Id.* at 28–29 (citing Pet. 35–40; Ex. 2018 ¶ 137). Petitioner contends that to modify Schonenberger to change the orientation of rollers so as to have a curved shape, a skilled artisan "would understand that the entire architecture of the Schonenberger system would need to be redesigned to do so but would have no guidance from either Socwell or Schonenberger on how to go about those changes." *Id.* at 29 (citing

Ex. 2018 ¶¶ 138–144). Patent Owner cites, as examples, Schonberger's metal slats as being "more rigid and difficult to make follow any curved path than the belt in Socwell" and Socwell's supports being "much more spaced out than in Schonenberger." *Id.* at 29–30 (citing Ex. 1010, Figs. 2, 9; Ex. 1011, Fig. 2; Ex. 2018 ¶¶ 138–144). Thus, Patent Owner contends, "Petitioner has not provided any argument, means, or knowhow for how a POSA would know to modify the curvature of the rollers in Schonenberger such that the slats would also follow such a curvature (without overlapping, pinching, etc.) so that the running surface would ultimately be curved." *Id.* at 31 (citing Ex. 2018 ¶¶ 143–144).

Fourth, Patent Owner contends that a person of skill in the art would not have been motivated to modify Schonenberger as Petitioner describes because "Schonenberger effectively teaches away from the proposed modifications." PO Resp. 31 (bolding omitted). Patent Owner argues that "the full scope of structural modifications Petitioner proposes is difficult to discern," but "appears to involve altering Schonenberger such that the running belt 1 'would conform to the profile of the supporting rollers 12' through the force of gravity." *Id.* at 32 (quoting Pet. 37). Patent Owner asserts that "[t]his would result in running belt 1 resting directly against support belts 13, 13', which follow the profile of rollers 12, even when running belt 1 is unloaded." *Id.* at 33 (citing Ex. 2018 ¶ 146). Specifically, Patent Owner contends that one object of Schonenberger's invention is "to provide a treadmill with 'a pleasant, springy feel when being stepped or jumped on without, however, being excessively stressed by bending or bowing'" (*id.* (quoting Ex. 1010, 1:63–2:1)) that is accomplished by having "a small amount of space (e.g., ½ cm) between running belt 1 and support belts 13/rollers 12 while, when the surface is loaded, it comes into contact

with the support belts 13/rollers 12" (*id.* (citing Ex. 1010, 5:51–6:4)). As contended above, Patent Owner alleges that Petitioner's modified version omits that space and "[w]ith nothing but gravity to bring running belt 1 in contact with support belts 13/rollers 12, Petitioner's modifications to Schonenberger would no longer function for its intended purpose." *Id.* at 33–34 (citing Ex. 2018 ¶¶ 147–151).

4. Analysis

We note that Petitioner does not solely rely on the teachings of Schonenberger for teaching a curvature in the running surface but on the combination of Schonenberger and Socwell. *See* Pet. 32; Pet. Reply 6, 9. Patent Owner does not allege that Socwell does not teach a curvature on its running surface. *See generally* PO Resp. Rather, Patent Owner asserts that Schonenberger's arrangement of rollers having a substantially flat profile would not have been modifiable to allow for a curved top profile, and even assuming they would be, the portion that forms the running surface would still be flat. *See id.* at 17–28. Patent Owner also alleges that Petitioner does not provide sufficient explanation how a skilled artisan would have known how to modify Schonenberger's flat running surface to have a curvature as taught by Socwell. *See id.* at 28–33.

Although Petitioner's position that Schonenberger's rollers 12, unmodified, have a slightly curved top profile (Pet. 29) is supported (*see* Ex. 1010, Fig. 12), Petitioner does not adequately explain how one of ordinary skill in the art would have modified Schonenberger's rollers with Socwell's curved running surface to result in the claimed "running surface, a portion of which is curved," as recited in independent claims 1, 10, and 21,

and "the bearings defining a portion of a curved running surface" as recited in independent claim 18.

The parties do not dispute the claim term "running surface." The '745 patent's disclosure, including the claims, is clear that the running surface of the belt is the surface on which a person would run. *See, e.g.,* Ex. 1001, 2:15–16, 2:28–29, 2:41–43, 2:53–54, 33:1–2 (differentiating the running surface from a running belt). Additionally, the claims all require that at least a portion of the running surface is curved. *See, e.g., id.* at claims 1, 10, 18, 21.

Petitioner's modified Figure 12 depicting "lowering the rollers 12 relative to the front and rear shaft assemblies" shows rollers 12 having a curved profile at the ends. Pet. 37. However, Petitioner has not adequately explained how that would result in a partially curved running surface. *See* PO Resp. 19–21. For example, Petitioner does not explain how toothed belt 5 is modified nor how the modification ensures that belt 5 does not bend through when rollers 12 that are attached to the frame 2 through bracket 19 are lowered. To the extent Petitioner contends that those belts would conform to the rollers (Pet. 37), Petitioner does not explain how this is accomplished.

Rather, Petitioner's suggestion that Schonenberger's running surface includes a steeply angled portion of the belt surface (Pet. 37) is speculative. As Patent Owner states, "even when modified such that the rollers 12 in Figure 12 are lower (closer to the ground) than rollers 12a (as depicted in Petitioner's modified figure) the usable running surface is still flat—not curved," and "a POSA would still have understood that Petitioner's proposed modification is too steep near the drum rollers (in light blue) to

constitute a running surface." PO Resp. 24 (citing Ex. 2018 ¶¶ 128–130); *see also id.* at 27.

As to the combination of Schonenberger and Socwell, Socwell does teach a curved running surface. *See* Ex. 1011, Fig. 1, 3:26–29. Petitioner relies on the combination of Schonenberger's rollers 12 and brackets 19 being adjusted to conform to a curved running surface as taught by Socwell. Pet. 32; Ex. 1003 ¶ 158. However, Petitioner does not show what the mechanics are of the combination of Schonenberger's lowered rollers and Socwell's curved running surface, i.e., how the resulting apparatus would be accomplished.

For example, Petitioner does not explain how Schonenberger would be modified to incorporate Socwell's curved running surface 16 that is atop curved deck 56 supported by ribs 54. As discussed above, Petitioner does not explain how rollers 12 and belts 5 and 13 would be modified to create the curve as taught by Socwell. And, Petitioner does not explain how Schonenberger's brackets 19 attached to frame 2 would be modified to create the curve desired by modifying the locations of rollers 12.

Further, Schonenberger's moveable surface 1 is formed of rigid lightweight metal slats 4. Ex. 1010, 4:43–47. In one embodiment, depicted in Schonenberger's Figure 10, slats 4 are connected to belt 5' that "at the same time, forms the resilient cushion between the slats 4 and the support rollers 12, 12'" respectively, as well as the longitudinal stiffening element which holds the slat 4 in adjacent alignment in the right position. *Id.* at 8:38–43.

Patent Owner's expert Dr. Blair testifies that:

> As can be seen, Schonenberger's rollers 12 as shown in Figure 9 again are flat, and the slats 4 follow along that flat plane

> on the support belt 13. However, if a POSA were to try and create a curved running surface, the POSA would not simply be able to lower the rollers 12 into a curved shape because the width of the slats would necessarily restrict the angles and distances between the rollers. Indeed, Schonenberger teaches that the width of one slat covers two or three of its rollers. EX1010 at 6:19-27 ("…three rollers 12 in engagement with each end of the slat 4 is preferred."). Any added curvature would not be a simple substitution of the curvature taught in Socwell because the slats and support belt mechanisms in Schonenberger need to be accounted for.

Ex. 2018 ¶ 140. Dr. Blair's testimony indicates that further modification would be needed to Schonenberger's system. *Id.* ¶ 138.

Petitioner responds that in the relied upon embodiment depicted in Figure 10, which Petitioner asserts is structurally different than Figure 9, "the individual slats 4 cannot overlap because the belts 5' maintain positioning of the slats 4 relative to each other." Pet. Reply 10 (citing Ex.1010, 4:37–41; Ex.1036 ¶ 43 (testimony of Dr. Giachetti)).

However, Schonenberger discloses that the distance between adjacent slats "is so selected that only little space or clearance is left between the slats." Ex. 1010, 4:54–56. Neither Petitioner's response nor Dr. Giachetti's cited testimony sufficiently explains how a POSA would modify Schonenberger's movable surface 1, having slats 4, to accommodate a concave curvature. *See* Ex.1036 ¶ 48 (Dr. Giachetti declaring that the first declaration did not discuss the gap between rollers 12 and belts 5'); Ex. 2018 ¶¶ 141–144.

Rather, Petitioner simply concludes that a "POSA would have known how to modify these brackets 19 to have a curved shape to arrange the rollers 12 in a curved top profile" as indicated in Schonenberger modified Figure 12, by "the use of a known technique — using a curvilinear

arrangement of bearings, as taught by Socwell." Pet. 40; Ex. 1003 ¶ 158. The relevant question is not whether a "POSA would have known how to modify these brackets 19 to have a curved shape to arrange the rollers 12 in a curved top profile;" rather, the relevant question is even if a POSA could modify the brackets 19 to have a curved shape to arrange the rollers 12 in a curved top profile, how would a POSA modify the remainder of Schonenberger's treadmill such that it would be able to function as a treadmill.

Petitioner asserts that a skilled artisan "would have understood the brackets 10 of Schonenberger *could* have been curved like the cover members 168 of Socwell" ((*id.* (emphasis added)) that cover belt securing assemblies 94 (Ex. 1011, 10:45–48), and would have understood that "the rollers 12 of Schonenberger *could* have been arranged in a curved profile like the rollers 98 of Socwell" (Pet. 40 (emphasis added)), that are part of belt securing assemblies 94 (Ex. 1011, 10:5–8). *See also* Paper 41, 32:11–13 ("Dr. Giachetti opined that the rollers 12 *can* be moved vertically up and down into different arrangements, such as the arrangement of the curved deck . . . and brackets 19 . . . *could* be curved, similar to the, the cover members.") (emphases added). Yet, Petitioner does not address the proposed design, mechanics, or engineering that a skilled artisan would have known to use in order to make these modifications to Schonenberger's brackets 19 and rollers 12.

Thus, Petitioner has not adequately shown by a how a skilled artisan facing the modification of Schonenberger to change orientation of the rollers from flat to an arc/curved shape, as taught by Socwell, would have understood how the architecture of the Schonenberger system would be redesigned to accomplish a curved running surface, as required by the

Challenged Claims. *See* PO Resp. 29 (arguing the architecture of the system would need to be redesigned and "would require more engineering resources and effort to modify than Petitioner identifies").

5. Summary — Alleged Obviousness of Claims 1, 10, 18, and 21 over Schonenberger, Socwell, Magid, and Slater

Based on our review and consideration of Petitioner's arguments and evidence, we find that based on the record, Petitioner has not established by a preponderance of the evidence how the asserted combination of Schonenberger, Socwell, Magid, and Sclater teaches every limitation of independent claims 1, 10, 18 and 21 and that an ordinarily skilled artisan would have had reason to combine Schonenberger, Socwell, Magid, and Sclater with a reasonable expectation of success.

In conclusion, based on our review of the evidence and arguments cited by Petitioner, we find that on this record, Petitioner has not demonstrated by a preponderance of evidence obviousness of claims 1, 10, 18, and 21 based on Schonenberger, Socwell, Magid, and Sclater.

6. Dependent claims 4, 7–9, 11, 12, 14, 17, 20, and 22–27

Petitioner's reliance on Sclater for dependent claims 4, 12, 25, and 27, and Schonenberger for dependent claims 7, 9, 11, 14, 17, 20, 22–24, and 26, and on the combination of Schonenberger and Socwell for dependent claim 8 (Pet. 57–68) does not resolve the deficiencies in Petitioner's contentions regarding claims 1, 10, 18, and 21. Thus, for the same reasons as discussed above regarding claims 1, 10, 18, and 21, we determine that Petitioner has not shown by a preponderance of the evidence that the combination of Schonenberger, Socwell, Magid, and Sclater teaches every limitation of claims 4, 7–9, 11, 12, 14, 17, 20, and 22–27 and that an

ordinarily skilled artisan would have had reason to combine Schonenberger, Socwell, Magid, and Sclater with a reasonable expectation of success.

7. Conclusion of Ground 1

Having considered the parties' arguments and evidence, we find, based on the record, Petitioner has not established by a preponderance of the evidence that claims 1, 4, 7–12, 14, 17, 18, and 20–27 would have been obvious over Schonenberger, Socwell, Magid, and Sclater.

F. GROUND 2 – ALLEGED OBVIOUSNESS OVER SCHONENBERGER, SOCWELL, MAGID, AND SCLATER — CLAIMS 1, 4, 7–12, 14, 17, 18, AND 20–27

1. Discussion

Petitioner presents the challenge to claims 1, 4, 7–12, 14, 17, 18, and 20–27 as presented under Ground 1 (section II.E) except that Petitioner applies alternative claim constructions from the '492 litigation for the terms "shaft," "safety device," and "substantially prevent." Pet. 68–71. Petitioner relies on the reasons, arguments, and evidence cited in Ground 1 (section II.E) and argues that it would have been obvious to combine Schonenberger's teachings with those of Socwell, Magid, and Sclater for the same "rationales as explained in Ground 1." *Id.* at 69, 71.

Thus, for the same reasons as discussed above under Ground 1 regarding claims 1, 10, 18, and 21 (section II.E.4), we determine that Petitioner has not shown by a preponderance of the evidence that the combination of Schonenberger, Socwell, Magid, and Sclater teaches every limitation of claims 1, 4, 7–12, 14, 17, 18, and 20–27 and that an ordinarily skilled artisan would have had reason to combine Schonenberger, Socwell, Magid, and Sclater with a reasonable expectation of success.

2. Conclusion of Ground 2

Having considered the parties' arguments and evidence, we find, based on the record, Petitioner has not established by a preponderance of the evidence of that claims 1, 4, 7–12, 14, 17, 18, and 20–27 would have been obvious over Schonenberger, Socwell, Magid, and Sclater.

G. GROUND 3 – ALLEGED OBVIOUSNESS OVER SOCWELL, MAGID, AND SCLATER

1. Discussion

Petitioner challenges claims 1, 4, 7–12, 14, 17, 18, and 20–27 as unpatentable under 35 U.S.C. § 103 over Socwell, Magid, and Sclater. Pet. 72–103. Specifically, Petitioner alleges that Socwell discloses a curved deck treadmill as recited in independent claims 1, 17, and 18, but for the claimed safety device, for which Petitioner relies on Magid and Sclater as discussed above in Ground 1. *Id.*

Patent Owner disagrees that Socwell discloses the claimed bearings and asserts that a person of ordinary skill would not have been motivated to combine Socwell with Magid and Sclater. PO Resp. 7–14, 34–51.

Patent Owner contends that Socwell does not disclose "the plurality of bearings at least partially supporting the running belt" as recited in claim 17, nor "disposing a running belt on the plurality of bearings" as recited in claim 18. PO Resp. 7–14.

2. Analysis

a) Claim 1

(1) Limitations 1.0, 1.1 – A treadmill, comprising: a frame.

Petitioner contends, and Patent Owner does not dispute, that Socwell discloses a curved treadmill comprising a support frame 12 having a front

and rear end, i.e., a frame, as recited in limitations 1.0 and 1.1. Pet. 72–74 (citing Ex. 1011 Abstr., 3:26–29, 5:23–26, 6:23–25, 9:57–65, 11:34–38, 11:53–61, Fig. 1; Ex. 1003 ¶¶ 302–305, 375, 376, 412, 413, 398–400); *see generally* PO Resp.

We determine that Petitioner's analysis and evidence sufficiently show that Socwell teaches a treadmill comprising a frame.

(2) Limitations 1.2 and 1.3 — "a front running belt pulley coupled to the frame; [and] a rear running belt pulley coupled to the frame and spaced a distance from the front running belt pulley."

Regarding limitations 1.2 and 1.3, Petitioner contends, and Patent Owner does not dispute, that the claimed front running and rear running belt pulleys coupled to the frame are disclosed by Socwell's first roller 78 at the front end (i.e., the front pulley) and the second roller 86 at the rear end (i.e., the rear pulley). Pet. 74–76 (citing Ex. 1011, 5:33–41, 6:27–45, Figs. 2, 4; Ex. 1003 ¶¶ 306–309, 394); *see generally* PO Resp.

We determine that Petitioner's analysis and evidence sufficiently show that Socwell teaches a treadmill having front and rear pulleys coupled to the frame and space a distance apart.

(3) Limitations 1.4 — "a plurality of bearings coupled to the frame."

To meet limitation 1.4, Petitioner relies on Socwell's belt securing assemblies disposed along the right and left sides of the frame 12 having rollers 98 (i.e., the bearings) mounted on an axle 100 supported by bracket 96 to provide a connection with belt 16. Pet. 76–78 (citing Ex. 1011, 10:5–12, 10:17–26, 11:15–29, Figs. 2, 5; Ex. 1003 ¶¶ 68, 310–316, 401).

Patent Owner contends that Socwell does not disclose "a plurality of bearings coupled to the frame" as recited in claim 1. PO Resp. 7–14. Specifically, Patent Owner asserts that Socwell's belt securing assemblies are not analogous to the bearings of claim 1, as evidenced by Petitioner's expert disavowing such an identification. *Id.* at 7 (citing Ex. 2023, 43:11–54:16).

Patent Owner alleges that "[i]n the '745 patent, the 'plurality of bearings' is only described and depicted as lying below and supporting the running belt 16," and thus requires the bearings to be positioned below the running belt. PO Resp. 7. (citing Ex. 1001, 11:39–40; Ex. 2018 ¶¶ 78, 79). Patent Owner also asserts that the '745 patent distinguishes the terms "rollers" and "wheels" from the term "bearings" such that a person of ordinary skill in the art would understand that there is a "relative, weight-bearing relationship between the running belt and the plurality of bearings," such that the bearings must directly or indirectly support and bear some of the weight of the running belt. *Id.* at 8–9 (citing Ex. 1001, 22:32–23:25, 23:43–24:13, 24:28–25:14, 26:4–13; Ex. 2018 ¶¶80–86; Ex. 2023, 44:6–51:13, 52:9–53:1).

Thus, Patent Owner asserts that Socwell's belt securing assembly 94 having rollers 98 are not bearings because assembly 94 "provide a means for substantially conforming the inherent flexible nature of the belt 16 to the arcuate configuration...." and assembly 94 and rollers 98 are positioned above the running belt 16 such that they do not support any of belt 16's weight. PO Resp. 9–10 (quoting Ex. 1011, 10:8–12 and citing *id.* at 10:18–20, Fig. 5; Ex. 2018 ¶¶ 87–90) (alteration in original).

However, as discussed above in Section II.C.2., "bearings," as recited in claim 1, do not require any particular structure, that they be weight

bearing, nor that they be below the running belt. We further note that the ’745 patent provides that it is the bearing rails (not recited in claim 1), comprised of a plurality of bearings, that support the running belt and help achieve the desired shape of the running surface. Ex. 1001, 11:39–46.

We determine that Petitioner’s analysis and evidence sufficiently show that Socwell’s rollers 98 teach the recited bearings in limitation 1.4.

(4) Limitation 1.5 — “a running belt at least partially supported by at least one of the front running belt pulley and the rear running belt pulley, wherein the running belt includes a running surface, at least a portion of which is curved.”

For the running belt having a running surface of which at a least a portion is curved, Petitioner asserts that Socwell discloses a curved belt 16 looped around rollers 78, 96 and secured to deck 56 by rollers 98. Pet. 83–84 (citing Ex. 1011, 4:13–19, 5:41–45, 10:17–26, Figs. 2, 3, 5; Ex. 1003 ¶¶ 317–319, 379–383, 415). Patent Owner does not dispute Petitioner’s contention. *See generally* PO Resp.

We determine that Petitioner’s analysis and evidence sufficiently show that Socwell teaches a treadmill having a running belt at least partially supported by at least one of the front and rear running belt pulleys, wherein the running belt includes a running surface, at least a portion of which is curved.

(5) Limitation 1.6 — “a support element coupled to the frame.”

Petitioner contends, and Patent Owner does not dispute, that Socwell discloses a support element, journal housings 28 and 34, coupled to the frame. Pet. 84–85 (citing Ex. 1011, 6:27–45; Ex. 1003 ¶¶ 320, 321, 416); *see generally* PO Resp.

We determine that Petitioner's analysis and evidence sufficiently show that Socwell teaches a treadmill having a support element coupled to the frame.

> *(6) Limitation 1.7 — "a safety device coupled to the running belt, the safety device at least partially supported by the support element, wherein the safety device includes a first safety race element and a second safety race element, wherein at least one of the first and second safety race elements is adapted for rotation relative to the frame, and wherein one of the first and second safety race elements substantially surrounds the other of the one of the first and second safety race elements."*

For the safety device, Petitioner asserts that Magid discloses mounting to a front or rear shaft assembly of a treadmill a safety device of a unidirectional control means 6, 6' that "includes a ratchet gear 61 rotationally coupled to the shaft 411 and a pawl 62 coupled to the base 11," so as to prevent bidirectional movement of the belt and reduce risk to the user losing balance when the belt moves forward. Pet. 85–86, 89 (citing Ex. 1012, 4:46–59, Figs. 2, 5; Ex. 1003 ¶¶ 322–335, 384–386, 416, 417). Petitioner explains how a skilled artisan would have been motivated to modify Socwell with Magid's control means 6, 6' to be mounted to Socwell's front or rear roller. *Id.* at 89–90. In particular, Petitioner asserts that Magid's ratchet gear 62 would be mounted coaxially with Socwell's roller 78 or 86 and Magid's pawl 61 would be rotationally attached to Socwell's frame 12. *Id.* at 90. Thus, Magid's ratchet gear 62 would be supported by Socwell's journal housing 34 through its roller 86, and Magid's control means 6, 6' would be at least partially supported by Socwell's journal housing. *Id.* (citing Ex. 1003 ¶ 327). And, Petitioner

asserts that combining Magid's control means with Socwell's treadmill would "permit only unidirectional movement of the running belt to reduce the risk of a user stepping onto the running belt of the treadmill and losing their balance when the belt moves in the forward direction." *Id.* at 89.

Patent Owner contends that a person of ordinary skill in the art "would not combine the teachings of Magid with that of Socwell" because Magid teaches the "criticality of a two-belt design in which the walking belts are positioned parallel to one another and of ensuring that the device is capable of therapeutic use" whereas Socwell's one-belt design is directed to non-therapeutic, recreational exercising. PO Resp. 34–37 (citing Ex. 1010, 1:10–14, 2:37–44; Ex. 1011, 1:10–12; Ex. 2012, 5:19–27; Ex. 2018 ¶¶ 153–180). Thus, Patent Owner alleges, a skilled artisan "would not have been motivated to look to Magid and combine its teachings with a single-belt device for exercise, such as those taught in Socwell," because the purpose of Magid's treadmill is different than that of the Socwell's treadmill. *Id.* at 36 (citing Ex. 2018 ¶ 164). Specifically, Patent Owner asserts that Magid's need of a "control means to prevent one of the belts from moving in the opposite direction while the other remains stationary or moves in the correct direction during normal use" is not present in Socwell's single belt treadmill. *Id.* at 37 (citing Ex. 2018 ¶¶ 164, 166–167).

Patent Owner's arguments relating to the differences between Magid's two-belt system and Socwell's single belt system (PO Resp. 34–36) are not persuasive because Petitioner is not incorporating Magid's two-belt system into Socwell's treadmill; rather Petitioner is only relying on Magid's safety device. "[T]he test for obviousness is not whether the features of a secondary reference may be bodily incorporated into the structure of the

primary reference." *Facebook, Inc. v. Windy City Innovations, LLC*, 973 F.3d 1321, 1343 (Fed. Cir. 2020).

Patent Owner's allegation that a skilled artisan would not have looked to Magid's double-belt treadmill for therapeutic use and combine its teachings with Socwell's single-belt device for exercise and recreational use, because of the alleged different purposes of Magid's and Socwell's apparatuses (PO Resp. 36–37) is not adequately supported. We do not agree with Patent Owner's characterization of Magid as being narrowly related to two-belt walkers used just for therapy. *See id.* at 36. As Petitioner points out, Magid discloses that its walker can be broadly used by people exercising, and Socwell discloses that its treadmill can be for therapeutic purposes. Pet. Reply 13 (citing Ex. 1011, 3:1–9, 3:5–57, 13:38–47; Ex. 1012, 1:53–56, 3:23–27). Thus, they are in the same field such that a skilled artisan would have been motivated to look to Magid's walker apparatus.

Patent Owner further asserts that "Magid, a therapeutic 'walker apparatus,' teaches away from a single belt, non-planar, or multi-planar exercise treadmill." PO Resp. 37–38 (citing Ex. 1012, 1:17). And, Patent Owner alleges, "[a]t the very least, a reader of Magid would be discouraged from combining it with elements of Socwell, particularly where those references criticize the features emphasized in Magid," because "the design and engineering requirements of a treadmill having a curved running surface differ from those of a treadmill with a flat or uniplanar running surface." *Id.* at 38 (citing Ex. 2018 ¶¶ 173–180).

We are not persuaded by the allegation by Patent Owner that Magid "effectively teaches away from Petitioner's proposed modification" because a skilled artisan "would not recognize the teachings of Magid to be

necessary or even compatible with those of Socwell." PO Resp. 37. "A reference may be said to teach away when a person of ordinary skill, upon reading the reference, would be discouraged from following the path set out in the reference, or would be led in a direction divergent from the path that was taken by the applicant." *In re Gurley*, 27 F.3d 551, 553 (Fed. Cir. 1994). Patent Owner points to differences between Socwell and Magid, but we are not persuaded that those differences – number of belts, use as a therapeutic device as opposed to a recreational exercise device, use of handles – would discourage a POSA from making the proposed combination. Ex. 1036 ¶¶ 63–64 (testifying that the proposed combinations do not rely on the belts and pointing out that Magid has a handle as well).

Further, we are persuaded by Petitioner and Dr. Giachetti's testimony that a POSA would have combined the manual curved treadmill disclosed in Socwell with the known technique of using a one-way clutch in a backstopping mode of operation to permit only unidirectional movement of the running belt and reduce the risk of and prevent a user from losing their balance and falling off the treadmill while mounting or dismounting. Pet. 97 (citing Ex. 1003 ¶¶ 342–345); *see also* Pet. Reply 14 (citing Ex. 1003 ¶¶ 175–186; Ex. 1036 ¶ 58).

Thus, we determine that Petitioner's analysis and evidence sufficiently show that the combination of Socwell and Magid teaches a safety device coupled to the running belt, the safety device at least partially supported by the support element, wherein the safety device includes a first safety race element and a second safety race element, wherein at least one of the first and second safety race elements is adapted for rotation relative to the frame, and wherein one of the first and second safety race elements

substantially surrounds the other of the one of the first and second safety race elements.

> *(7) Limitation 1.8 — "wherein one of the first and second safety race elements and the running belt freely rotates in a first direction of rotation relative to the frame, however, in a second direction of rotation, opposite the first direction of rotation, the one of the first and second safety race elements is substantially prevented from rotation relative to the frame to substantially prevent rotation of the running belt relative to the frame."*

Petitioner contends that in the modified Socwell treadmill, the inner race of the one-way bearing (i.e., safety element) and the movable surface 1 (i.e., movable belt) are coupled and can rotate in unison relative to the housing 2 (i.e., frame) in the rearward (i.e., first) direction, and the sprags (i.e., part of the safety element) prevent rotation of the inner race and movable surface 1 in the forward direction relative to the frame 12. Pet. 102–103 (citing Ex. 1017, 316, 318; Ex. 1003 ¶¶ 356, 357, 387, 406, 418).

Acknowledging that the treadmill of Socwell as modified by Magid does not teach "first and second safety elements with one surrounding the other," Petitioner relies on Sclater's sprag-type one-way bearing assembly that includes sprags with rolling elements, such as cylindrical rollers or balls, an inner race, and an outer race surrounding the inner race. Pet. 90–91 (citing Ex. 1017, 312, 318). Petitioner further asserts that "wedging between the sprags and the inner and outer races prevents rotation of the inner race in an opposite direction, which prevents the belt from moving forward." *Id.* at 91–93 (citing Ex. 1017, 318; Ex.1003 ¶¶ 331–335).

Dr. Giachetti testifies that "[s]ome common mechanical clutches include ratchet clutches and cam type one-way clutches, such as sprag clutches." Ex. 1003 ¶ 81. Dr. Giachetti testifies that "[r]atchet and pawl clutch mechanisms make noise during operation" because an audible "click" sound is made when the pawl collides with a gear tooth on the ratchet. Ex. 1003 ¶ 272; see also *id.* ¶ 81 ("A ratchet clutch having a pawl that contacts the gear during overrunning is loud, as compared to other mechanical clutches."). Similarly, Sclater teaches that a friction-type clutch is quieter than a ratchet and pawl mechanism. Ex. 1017, 316. Sclater states:

> Sprags combined with cylindrical rollers in a bearing assembly can provide a simple, low-cost method for meeting the torque and bearing requirements of most machine applications. Designed and built by Est. Nicot of Paris, this unit gives one-direction-only torque transmission in an overrunning clutch. In addition, it also serves as a roller bearing.

Ex. 1017, 312.

Dr. Giachetti also testifies that roller clutches are better suited for high-speed freewheeling than ratchet clutches because "the pawl may skip past a few teeth before backstopping the ratchet gear, whereas the sprags are always in contact with the rings and do not need to find a discrete gear tooth to stop" and "because there are multiple sprags, they distribute the load over a larger surface area." Ex. 1003 ¶ 273 (citing Ex. 1017, 303, 320).

Finally, Dr. Giachetti testifies that "[a] POSA would have considered a sprag-type one-way clutch bearing [suitable] for an exercise equipment application, such as a treadmill." Ex. 1003 ¶¶ 91, 275 (citing Ex. 1018, 52–53 (a catalogue describing a sprag type one-way clutch as an option for "exercise equipment").

Given the testimony of Dr. Giachetti as to the knowledge of a POSA and the supporting evidence from Sclater, Petitioner has sufficiently shown that it would have been obvious to a POSA to substitute a one-way sprag type bearing clutch for Magid's ratchet and pawl one-way mechanism in order to reduce noise and improve durability.

Petitioner also explains that a skilled artisan would have known how and would have been motivated to substitute Magid's ratchet clutch with Slater's sprag clutch and incorporate the modified clutch into Socwell's treadmill. Pet. 89–103. Specifically, Petitioner asserts that combining Magid's control means with Socwell's treadmill would "permit only unidirectional movement of the running belt to reduce the risk of a user stepping onto the running belt of the treadmill and losing their balance when the belt moves in the forward direction." *Id.* at 89.

Patent Owner contends that Petitioner's reasoning regarding Sclater relies on improper hindsight. PO Resp. 39–51. Specifically, Patent Owner asserts that "Petitioner does not adequately explain why a POSA would have been specifically motivated to select the mechanism Petitioner relies on, rather than one of the dozens of other options Sclater presents." *Id.* at 41. Patent Owner alleges that Petitioner's identified motivation for using Sclater's sprag-type clutch, i.e., "reduced noise and improved durability" (Pet. 98), "are ***not*** ascribed to the specific clutch Petitioner identifies." PO Resp. 42 (citing Ex. 2018 ¶¶ 182–190); *see also id.* at 43–48. Patent Owner argues that "[g]eneric statements like those Petitioner relies on from Sclater cannot support a motivation to combine when they are not specifically tied to the clutch Petitioner argues should be incorporated into the primary reference devices." *Id.* at 48 (citing *Purdue Pharma L.P. v. Depomed, Inc.*, 643 F. App'x 960, 964-66 (Fed. Cir. 2016)).

We are not persuaded by Patent Owner's argument that Petitioner's motivations to combine Socwell, Magid, and Sclater "are fraught with hindsight bias," because they "amount to little more than just picking and choosing aspects of alleged prior art to attempt to satisfy the claim elements, which is not the law of obviousness." PO Resp. 39–40. We also disagree that "Petitioner does not adequately explain why a POSA would have been specifically motivated to select the mechanism Petitioner relies on, rather than one of the dozens of other options Sclater presents." *Id.* at 41–51.

The test for obviousness is not whether the claimed invention is expressly disclosed in the references, but whether the claimed subject matter would have been obvious to those of ordinary skill in the art in light of the *combined teachings* of those references. *In re Keller*, 642 F.2d 413, 425 (CCPA 1981). In an obviousness analysis, it is not necessary to find precise disclosure directed to the specific subject matter claimed because inferences and creative steps that a person of ordinary skill in the art would employ can be taken into account. *See KSR*, 550 U.S. at 418. In this regard, "[a] person of ordinary skill is also a person of ordinary creativity, not an automaton." *Id.* at 421. "[I]n many cases a person of ordinary skill will be able to fit the teachings of multiple patents together like pieces of a puzzle." *Id.* As the U.S. Supreme Court has stated, obviousness requires an "expansive and flexible" approach that asks whether the claimed improvement is more than a "predictable variation" of "prior art elements according to their established functions." *Id.* at 415, 417. "A factfinder should be aware, of course, of the distortion caused by hindsight bias and must be cautious of arguments reliant upon *ex post* reasoning." *Id.* at 421 (citing *Graham*, 383 U.S. at 36). "Rigid preventative rules that deny

factfinders recourse to common sense, however, are neither necessary under our case law nor consistent with it." *Id.*

Patent Owner's arguments are unpersuasive because they are rigidly focused on the alleged lack of a sufficiently particular disclosure of motivation in Sclater, without taking full account of an ordinarily skilled artisan's "knowledge, creativity, and common sense." *Randall Mfg. v. Rea*, 733 F.3d 1355, 1362 (Fed. Cir. 2013).

Magid broadly describes its safety device as "[a] unidirectional control means 6, 6'" and describes the unidirectional control means 6, 6' as being a ratchet and pawl mechanism in one embodiment. Ex. 1012, 4:47–55. This suggests that that the unidirectional control means 6, 6' could be a unidirectional control mechanism other than the ratchet and pawl described in one embodiment of Magid. *See also id.* at 7:61–67 (stating that Magid's invention is not limited to the preferred embodiments).

The portions of Sclater upon which Petitioner relies discuss 12 basic mechanical friction and positive clutches, seven overrunning clutches and ten ways to apply them, one-way clutches, roller type clutches, overriding clutches, and sprag clutches. Ex. 1017, 5–9, 16 (internal pages 302–303, 311–312, 316, 323). As Petitioner discusses and Drs. Blair and Giachetti explain, a person of ordinary skill in the art could identify a particular problem and use a catalog, such as the Emerson catalog (Ex. 1018), and select potential products that would provide a solution to that problem and "then call the tech support line to confirm their clutch selection." Pet. Reply 16–17; Ex. 1036 ¶¶ 73–75; Ex. 1038, 89:12–90:12, 92:4–14. A person of ordinary skill in the art would, when there is a design need to solve a problem, select from a finite number of identified solutions of clutches that may also provide a benefit such reduced noise, and would have "good reason

to pursue the known options within his or her technical grasp. If this leads to the anticipated success, it is likely the product not of innovation but of ordinary skill and common sense." *KSR*, 550 U.S. at 421

After considering the parties' arguments and evidence, we determine, that Petitioner's evidence and analysis sufficiently show how the combination of Socwell, Magid, and Sclater teaches wherein one of the first and second safety race elements and the running belt freely rotates in a first direction of rotation relative to the frame, however, in a second direction of rotation, opposite the first direction of rotation, the one of the first and second safety race elements is substantially prevented from rotation relative to the frame to substantially prevent rotation of the running belt relative to the frame.

(8) Summary of Claim 1

We have considered Patent Owner's arguments and evidence concerning the objective indicia of nonobviousness, discussed below, as part of our obviousness analysis for this ground. Patent Owner's evidence of secondary considerations, however, do not outweigh Petitioner's showing that claim 1 would have been obvious over Socwell, Magid, and Sclater.

b) Claims 10 and 21

(1) Analysis

Claims 10 and 21 recite elements substantially similar to that of claim 1 with the exceptions being claims 10 and 21 recite "a rotatable element coupled to the frame" instead of the bearings in claim 1, and that the running belt is at least partially supported by the rotatable element, and claim 10 does not recite a support element coupled to the frame. Ex. 1001, 33:50–34:3, 34:57–35:13. Petitioner alleges that Socwell's rollers 98 meet

the claimed rotatable elements and support belt 16 by securing belt 16 to curved deck 56. Pet. 78, 83 (citing Ex. 1011, 10:17–26, Fig. 5; Ex. 1003 ¶ 378). Alternatively, Petitioner alleges that Socwell's rollers 78, 86 meet the claimed rotatable elements. *Id.* (citing Ex. 1011, 5:33–45, 6:27–45; Ex. 1003 ¶¶ 317–319, 377, 379–383, 415).

Patent Owner does not contest these allegations (*see* PO Resp. 7–14 (arguing only claims 1, 17, and 18)), and the preponderance of the evidence supports these allegations. Socwell discloses that roller assembly 14 comprising rollers 78 and 86 are rotatably disposed contiguous the first and second ends 58 and 60 of the deck 56 between the first and second sides 20 and 22 of the support frame 12, with belt 16 rotatably mounted in relation to the roller assembly 14 to provide a structurally supported arcuate shaped movable surface. Ex. 1011, 5:23–45.

Claims 10 and 21 also require first and second safety race elements. Ex. 1001, 33:56–34:3, 34:64–35:13. As discussed above regarding claim 1, in Sections II.G.4.a.6 and 7, Petitioner relies on Magid and Sclater for teaching these safety race elements. Pet. 85–103. For the reasons discussed above, Patent Owner's arguments relating to the differences between Magid's two-belt system and Socwell's single belt system (PO Resp. 34–36), that a skilled artisan would not have looked to Magid's treadmill and combine its teachings with Socwell's device (*id.* at 36–37), that Magid teaches away from Petitioner's proposed modification (*id.* at 37), Petitioner's motivations to combine Socwell, Magid, and Sclater based on hindsight (*id.* at 39–40), and that Petitioner does not explain why a skilled artisan would select Petitioner's proposed sprag clutch (*id.* at 41–51) are not availing.

After considering the parties' arguments and evidence, we determine, that Petitioner's evidence and analysis sufficiently show how the combination of Socwell, Magid, and Sclater teaches the elements of independent claims 10 and 21.

(2) Summary of Claims 10 and 21

We have considered Patent Owner's arguments and evidence concerning the objective indicia of nonobviousness, discussed below, as part of our obviousness analysis for this ground. Patent Owner's evidence of secondary considerations, however, do not outweigh Petitioner's showing that claims 10 and 21 would have been obvious over Socwell, Magid, and Sclater.

c) Claim 18

Because we find it dispositive, we focus our discussion on the dispute regarding whether Socwell discloses the bearings on which a running belt is disposed as recited in claim 18. The preponderance of the evidence shows that it does not.

Claim 18 of the '745 patent requires, in relevant part, a method comprising providing "a plurality of bearings coupled to the frame" of a treadmill and "disposing a running belt on the plurality of bearings." Ex. 1001, 34:30–36. Petitioner alleges Socwell's rollers 98 form top bearings for belt 16 and Socwell's curved deck 56 forms a bottom bearing for belt 16, meeting the claims plurality of bearings. Pet. 80 (citing Ex. 1011, 5:21–33, 7:58–8:07, 8:11–27, 10:5–12, 10:17–26; Ex. 1003 ¶¶ 65–70, 134–137, 401). Petitioner alleges that "Socwell discloses a curved belt 16 secured on the curved deck 56 by the rollers 98 ('plurality of bearings')." *Id.* at 82–83.

Patent Owner contends that "even if belt securing assembly 94 and/or roller 98 could be considered 'bearings,' Socwell still could not disclose . . . 'disposing a running belt on the ***plurality*** of bearings,' as required by claim 18." PO Resp. 12 (citing Ex. 2018 ¶ 97). We agree.

As discussed above in Section II.C.3, claim 18 requires that the belt is disposed on the plurality of bearings. Socwell's rollers 98 are above belt 16; thus, the belt is not disposed on rollers 98. Even though belt 16 is disposed on deck 56, deck 56 is not a plurality of bearings.

After considering the parties' arguments and evidence, we determine, that Petitioner's analysis and evidence do not sufficiently show how the combination of Socwell, Magid, and Sclater teaches the elements of independent claim 18.

3. Summary — Alleged Obviousness of Claims 1, 10, 18, and 21 over Socwell, Magid, and Slater

Based on our review and consideration of Petitioner's arguments and evidence, we find that based on the record, Petitioner has not established by a preponderance of the evidence how the asserted combination of Socwell, Magid, and Sclater teaches every limitation of independent claim 18 and that an ordinarily skilled artisan would have had reason to combine Schonenberger, Socwell, Magid, and Sclater with a reasonable expectation of success.

However, based on our review and consideration of Petitioner's arguments and evidence, we find that based on the record, Petitioner has established by a preponderance of the evidence how the asserted combination of Socwell, Magid, and Sclater teaches every limitation of independent claims1, 10, and 21 and that an ordinarily skilled artisan would

have had reason to combine Schonenberger, Socwell, Magid, and Sclater with a reasonable expectation of success.

We address Patent Owner's secondary consideration arguments below in Section II.G.5.

4. Dependent claims 4, 7–9, 11, 12, 14, 17, 20, and 22–25

Petitioner's reliance on Socwell for dependent claim 20, does not resolve the deficiencies in Petitioner's contentions regarding claim 18. Thus, for the same reasons as discussed above regarding claim 18, we determine that Petitioner has not shown by a preponderance of the evidence that the combination of Socwell, Magid, and Sclater teaches every limitation of claim 20, and that an ordinarily skilled artisan would have had reason to combine Socwell, Magid, and Sclater with a reasonable expectation of success.

Petitioner's reliance on Sclater for dependent claims 4, 12, and 25, and on Socwell for dependent claims 7–9, 11, 14, and 22–24 does not impact Petitioner's contentions and the persuasiveness of Patent Owner's contentions. Thus, for the same reasons as discussed above regarding claims 1, 10, and 21, we determine that Petitioner has shown by a preponderance of the evidence that the combination of Socwell, Magid, and Sclater teaches every limitation of claims 11, 14, and 22–24 and that an ordinarily skilled artisan would have had reason to combine Socwell, Magid, and Sclater with a reasonable expectation of success. We address Patent Owner's secondary considerations arguments below.

Dependent claim 17 requires that the rotatable element of independent claim comprises a plurality of bearings at least partially supporting the belt. Ex. 1001, 34:23–26. Petitioner contends that Socwell's "belt 16 is supported

by the curved deck 56 and retained by the rollers 98 ('*plurality of bearings*')." Pet. 82–83; *see also id.* at 109–110; Pet. Reply 6 ("The running belt 16 is at least partially supported by, and disposed on, the rollers 98 and the deck 56 which are "*bearings*.") (citing Ex. 1003 ¶¶ 396, 404).

Patent Owner relies on the arguments presented for claim 1 as to why Socwell's rollers 98 are not "bearings." PO Resp. 7–11. For the reasons discussed in Section II.G.a.3 above with reference to claim 1, we do not agree.

Patent Owner further argues that Socwell's rollers 98 cannot at least partially support the running belt because they are located above the belt, and not below. PO Resp. 12–13. Yet, the claim does not require that the support must be completely from below, only that the bearing at least partially support the belt. Petitioner's position that rollers 98 and deck 56 support the belt is supported. Socwell discusses that deck 56 supports the belt from beneath and rollers 98 provides some support from above by engaging belt 16 so as to retain a side portion of belt 16 to be substantially flush with deck 56. *See* Pet. 82–83; Ex. 1011, 10:21–23.

After considering the parties' arguments and evidence, we determine, that Petitioner's analysis sufficiently shows how the combination of Socwell, Magid, and Sclater teaches the elements of dependent claim 17.

5. Objective Indicia of Nonobviousness

a) Legal Standards

Objective evidence of non-obviousness "may often be the most probative and cogent evidence in the record" and "may often establish that an invention appearing to have been obvious in light of the prior art was not." *Transocean*, 699 F.3d at 1349. Thus, notwithstanding what the

teachings of the prior art would have suggested to one skilled in the art, objective evidence of nonobviousness (or "secondary considerations") may lead to a conclusion that the challenged claims would not have been obvious. *In re Piasecki*, 745 F.2d 1468, 1471–72 (Fed. Cir. 1984). Thus, our obviousness analysis includes consideration and weighing of Patent Owner's indicia of nonobviousness.

In order to accord substantial weight to secondary considerations in an obviousness analysis, "the evidence of secondary considerations must have a 'nexus' to the claims, i.e., there must be 'a legally and factually sufficient connection' between the evidence and the patented invention." *Henny Penny Corp. v. Frymaster LLC*, 938 F.3d 1324, 1332 (Fed. Cir. 2019) (quoting *Demaco Corp. v. F. Von Langsdorff Licensing Ltd.*, 851 F.2d 1387, 1392 (Fed. Cir. 1988)); *Quanergy Sys., Inc. v. Velodyne Lidar USA, Inc.*, 24 F.4th 1406, 1417 (Fed. Cir. 2022).

Although the patent owner bears the initial burden of proving a nexus (*WMS Gaming Inc. v. Int'l Game Tech.*, 184 F.3d 1339, 1359 (Fed. Cir. 1999)), a presumption of nexus may be appropriate if the patent owner shows "the asserted objective evidence is tied to a specific product and that product 'embodies the claimed features, and is coextensive with them.'" *Polaris Indus, Inc. v. Arctic Cat, Inc.*, 882 F.3d 1056, 1072 (Fed. Cir. 2018) (quoting *Brown & Williamson Tobacco Corp. v. Philip Morris Inc.*, 229 F.3d 1120, 1130 (Fed. Cir. 2000)); *Quanergy*, 24 F.4th at 1417. On the other hand, "[w]hen the [product] is not coextensive with the patented invention—for example, if the patented invention is only a component of a commercially successful machine or process," the patent owner is not entitled to a presumption of nexus. *Demaco*, 851 F.2d at 1392.

A patent owner may establish nexus, either through (1) the use of a rebuttable presumption that arises when certain conditions are met or (2) a direct showing of nexus.

b) Rebuttable Presumption of Nexus

In the first, a patent owner may rely on a rebuttable presumption of nexus as follows:

> As first recognized in *Demaco* . . ., a patentee is entitled to a rebuttable presumption of nexus between the asserted evidence of secondary considerations and a patent claim if the patentee shows that the asserted evidence is tied to a specific product and that the product "is the invention disclosed and claimed." 851 F.2d at 1392 (emphasis added). That is, presuming nexus is appropriate "when the patentee shows that the asserted objective evidence is tied to a specific product and that product 'embodies the claimed features, and is coextensive with them.'" *Polaris Indus., Inc. v. Arctic Cat, Inc.*, 882 F.3d 1056, 1072 (Fed. Cir. 2018) (quoting *Brown & Williamson Tobacco Corp. v. Philip Morris Inc.*, 229 F.3d 1120, 1130 (Fed. Cir. 2000)) . . .
>
> . . . Whether a product is coextensive with the patented invention, and therefore whether a presumption of nexus is appropriate in a given case, is a question of fact.

Fox Factory, *Inc. v. SRAM, LLC*, 944 F.3d 1366, 1373 (Fed. Cir. 2019).

The court in *Fox Factory* further explained, with respect to a presumption of nexus, that "the degree of correspondence between a product and a patent claim falls along a spectrum," and that "[a]lthough we do not require the patentee to prove perfect correspondence to meet the co-extensiveness requirement, what we do require is that the patentee demonstrate that the product is essentially the claimed invention." *Fox Factory*, 944 F.3d at 1374. The court in *Fox Factory* rejected the patent owner's argument that the co-extensiveness requirement is simply an inquiry into "whether the patent claims broadly cover the product that is the subject

of the evidence of secondary considerations." *Id.* at 1377. Thus, simply showing that a patent claim broadly covers the commercial product being asserted as objective evidence of nonobviousness is not enough to show they are coextensive. *Id.* That is because "[a] patent claim is not coextensive with a product that includes a 'critical' unclaimed feature that is claimed by a different patent and that materially impacts the product's functionality." *Id.* at 1375. In contrast, "if the unclaimed features amount to nothing more than additional insignificant features, presuming nexus may nevertheless be appropriate." *Id.* at 1374. Based on the facts of the case in *Fox Factory*, the court found that "nexus may not be presumed" because "there are one or more features not claimed by the [challenged patent] that materially impact the functionality" of the products on which patent owner's presumption argument is based and the court rejected arguments that the patent claims broadly cover the product. *Id.* at 1376–1377.

Patent Owner argues that different models of its curved manual treadmills practice and are coextensive with the claims of the '745 patent. PO Resp. 52–54. They are 1) the CURVE treadmill (a.k.a SpeedBoard treadmill and CURVE Legacy treadmill); 2) Curve XL treadmill, 3) Curve LTG treadmill, 4) Curve FTG treadmill; 5) Curve 3.0 treadmill, 6) Curve Trainer, and 7) EcoMill and EcoMill Legacy treadmills. *Id.*

To support its argument, Patent Owner relies upon a claim chart purporting to show how the CURVE treadmill meets the claimed invention and the testimony of Dr. Blair. *Id.* at 54–63; Ex. 2018 ¶¶ 198–200 (citing Ex. 2026).

However, Patent Owner and Dr. Blair indicate that a number of its curved manual treadmills had different distinguishing features—features that are unclaimed. Patent Owner indicates that the Curve XL offered a larger

running surface, that the Curve LTG treadmill is a lighter duty version, that Curve FTG treadmill has different handrails and additional features for providing different levels of resistance, that the Curve 3.0 has upgraded software and sophisticated electronics, and the Curve Trainer has a less steep curve that provides a quieter and quicker acceleration, and the EcoMill and EcoMill Legacy has an onboard generators system that produces power for the display and USB charging station. Further, as Petitioner points out, we note that Patent Owner's evidence points to unclaimed features such as a durable WOODWAY membrane technology, displays, heart-rate monitors, speed outputs, adjustable resistance, sophisticated load cells, data acquisition boards and software, and runner feedback system. Pet. Reply 24–25 (citing Ex. 1037 (confidential), 27:13–25, 28:20–29:13; Ex. 2028, 77–79).

Patent Owner and Dr. Blair broadly assert that these unclaimed features are not significant for the purposes of establishing nexus. PO Resp. 52–54; Ex. 2018 ¶¶ 198–200. But neither Patent Owner nor Dr. Blair sufficiently explains why these features are insignificant and, at best, Dr. Blair's testimony shows that the '745 patent's claims broadly cover the CURVE treadmill only. PO Resp. 52–54; Ex. 2018 ¶¶ 198–200.

After reviewing Patent Owner's evidence of coextensions, determine that Patent Owner's evidence does not sufficiently establish that the different models of its curved manual treadmills are coextensive with the claims of the '745 patent. Patent Owner, thus, is not entitled to a presumption of nexus.

c) Direct Showing of Nexus

"A finding that a presumption of nexus is inappropriate does not end the inquiry into secondary considerations," however. *Fox Factory*, 944 F.3d

at 1373. "To the contrary, the patent owner is still afforded an opportunity to prove nexus by showing that the evidence of secondary considerations is the 'direct result of the unique characteristics of the claimed invention.'" *Id.* at 1373–74 (quoting *In re Huang*, 100 F.3d 135, 140 (Fed. Cir. 1996)). "Where the offered secondary consideration actually results from something other than what is both claimed and novel in the claim, there is no nexus to the merits of the claimed invention," meaning that "there must be a nexus to some aspect of the claim not already in the prior art." *In re Kao*, 639 F.3d 1057, 1068−69 (Fed. Cir. 2011).

Ultimately, we must weigh Patent Owner's objective evidence in the context of whether the claimed invention as a whole would have been obvious to a skilled artisan. *WBIP*, 829 F.3d at 1331−32. Only if the patent owner presents a *prima facie* case of nexus does the burden of production shift to the patent challenger to adduce evidence showing that any commercial success or industry praise was due to extraneous factors other than the patented invention. *Demaco*, 851 F.2d at 1393.

d) Commercial Success

"Evidence of commercial success, or other secondary considerations, is only significant if there is a nexus between the claimed invention and the commercial success." *Ormco Corp. v. Align Tech., Inc.*, 463 F.3d 1299, 1311–12 (Fed. Cir. 2006). "When a patentee can demonstrate commercial success, usually shown by significant sales in a relevant market, and that the successful product is the invention disclosed and claimed in the patent, it is presumed that the commercial success is due to the patented invention." *J.T. Eaton & Co. v. Atlantic Paste & Glue Co.*, 106 F.3d 1563, 1571 (Fed. Cir. 1997).

Patent Owner argues that it enjoyed 100% market share of the curved, manual treadmill market and made significant sales. PO Resp. 64–66. Citing to the testimony of Mr. Weber, Patent Owner asserts that "[t]he commercial success of Patent Owner's products was based on the key features of the claimed invention." *Id.* at 66 (citing Ex. 2020 ¶¶ 34–41).

Mr. Weber is Patent Owner's Director of Sales and Marketing. Ex. 2020 ¶ 2. Mr. Weber testifies that safety is a critical factor for commercial success and in particular the use of a safety mechanism to control unintended rotation of the running bet. *Id.* ¶ 34 ("Woodway's line of curved, manual treadmills would not be commercially successful without such a safety feature"). *Id.* ¶¶ 37–41.

Petitioner argues that Patent Owner's evidence does not establish that Patent Owner is commercially successful in the field of manual treadmills and not just curved manual treadmills and that Patent Owner's evidence does not establish a nexus between its sales and the claimed safety mechanism. Pet. Reply 22–28.

We agree with Petitioner that Patent Owner has not sufficiently established a nexus between its sales and the alleged commercial success. We do not credit Mr. Weber's testimony that the alleged commercial success of Woodway's curved, manual treadmills was due to the safety mechanism. As Petitioner points out, Mr. Weber's testimony indicates that Woodway's alleged commercial success could be due to other factors, such as Woodway's reputation. Pet. Reply 25 (citing Ex. 2020 ¶¶ 2, 13).

e) Industry Praise

"Evidence that the industry praised a claimed invention or a product that embodies the patent claims weighs against an assertion that the same

claim would have been obvious." *Lectrosonics, Inc. v. Zaxcon, Inc.*, IPR2018-01129, Paper 33 at 68 (PTAB Jan. 24, 2020) (citing *WBIP*, 829 F.3d at 1334).

Patent Owner argues that its "CURVE line of treadmills garnered significant attention and praise in the industry." PO Resp. 67–68; PO Sur-Reply 24. For support, Patent Owner asserts that its Curve Legacy was nominated for an Innovation Award by FIBO (Ex. 2020 ¶ 56, Ex. 2057), cites the testimony of Mr. Weber, Patent Owner's Director of Sales and Marketing (Ex. 2020 ¶¶ 43–56), and certain publications (Ex. 2045, 5; Ex. 2046, 3, 5; and Ex. 2052, 1). PO Resp. 67–68. Additionally, Mr. Weber's testimony refers to certain publications that are at Exhibits 2047–2057.

We have reviewed all of Patent Owner's cited evidence and determine that it is insufficient to show industry praise. *See* Pet. Reply 29. Although Patent Owner's evidence praises the CURVE lines to some extent, the praise is because of features not claimed and not for the claimed invention, which includes the claimed safety device. *See* Exs. 2047–2057; Ex. 1037, 67:8–16. For example, Exhibit 2057 indicates that the Curve Legacy was nominated for the Innovation Award by FIBO because it is "environmentally friendly", "has no wear and tear components," "not necessary to replace the deck or running belt," includes "a durable WOODWAY membrane technology," and provides "direct feedback." Ex. 2057, 3. Additionally, Ex. 2047 is insufficient because it is Patent Owner's own press release and, thus, is praise from itself. None of the cited evidence mentions the claimed safety device feature. *See* Exs. 2047–2057.

f) Copying

> "[C]opying requires evidence of efforts to replicate a specific product, which may be demonstrated through internal company documents, direct evidence such as disassembling a patented prototype, photographing its features, and using the photograph as a blueprint to build a replica, or access to the patented product combined with substantial similarity to the patented product."

Wyers v. Master Lock Co., 616 F.3d 1231, 1246 (Fed. Cir. 2010).

Patent Owner argues that "a number of companies" have launched products that are close copies of products in its CURVE line. PO Resp. 68–72; *see also* PO Sur-Reply 24–25. As evidence of copying, Patent Owner relies upon the testimony of its employee Mr. Weber that a number of companies have products that are allegedly copies of Patent Owner's CURVE line of products. PO Resp. 68 (citing Ex. 2020 ¶¶ 57–68). Mr. Weber's testimony relies upon certain photographs to show the alleged copying (Exs. 2058–2065). Patent also alleges copying by a licensee and Petitioner. PO Resp. 68–70.

Petitioner responds that Patent Owner's evidence does not show evidence of an effort to replicate a specific product. Pet. Reply 29.

We have reviewed all of Patent Owner's cited evidence and determine that it is insufficient to show copying of the claimed invention. Exhibits 2058–2065 make no mention of a feature resembling the claimed safety device. We also do not credit the conclusory testimony of Mr. Weber, Patent Owner's Director of Sales and Marketing, concerning his observations of alleged copying by others. Ex. 2020 ¶¶ 57–68. Finally, Patent Owner's evidence does not sufficiently show copying of a specific product.

g) Failure of Others/Long-Felt But Unsolved Need & Passage of Time

Long-felt need can be shown by evidence that indicates that the prior art had a recognized need for a solution to the problem, and that others had tried and failed to find a solution to that problem. *Millennium Pharms., Inc. v. Sandoz Inc*., 862 F.3d 1356, 1369 (Fed. Cir. 2017).

Patent Owner asserts that "[b]efore the priority date of the '580 patent, no one had successfully commercialized a curved, manual treadmill." PO Resp. 72–73; PO Sur-Reply 26. Patent Owner additionally argues that the length of time between the cited prior art and the patent shows nonobviousness. PO Resp. 73–74.

Petitioner argues that Patent Owner's evidence fails to show that other POSA tried and failed to find a solution. Pet. Reply 33–34.

We have reviewed all of Patent Owner's cited evidence and determine that it is insufficient to show copying of the claimed invention. Pet. Reply 33–34. Patent Owner's evidence does not sufficiently show that a POSA recognized a need that was long-felt or that others had tried and failed to solve the problems. None of the cited evidence describes failed efforts of others to solve the specific problems addressed by the claimed invention, such as a safety device that prevents bidirectional movement.

h) Conclusion as to Patent Owner's Indicia of Nonobviousness

We have considered all of Patent Owner's arguments and evidence concerning indicia of nonobviousness (secondary considerations). We determine Patent Owner has not sufficiently established a nexus between the unique features of the claimed invention and the evidence of secondary considerations. We, thus, give Patent Owner's evidence little weight.

6. Conclusion of Ground 3

In conclusion, based on our review of the evidence and arguments cited by Petitioner, we find that on this record, Petitioner has demonstrated by a preponderance of evidence obviousness of claims 1, 4, 7–12, 14, 17, and 21–25 but has not demonstrated by a preponderance of evidence obviousness of claims 18 and 20 based on Socwell, Magid, and Sclater.

III. CONCLUSION[6]

After reviewing the evidence and arguments presented, we determine for the reasons discussed above that Petitioner has established by a preponderance of the evidence that Challenged Claims 1, 4, 7–9, 14, 17, and 21–25 are not patentable based on Ground 3, but Petitioner has not established by a preponderance of the evidence that Challenged Claims 18, 20, 26, and 27 are not patentable based on any of the Grounds.

---

[6] Should Patent Owner wish to pursue amendment of the challenged claims in a reissue or reexamination proceeding subsequent to the issuance of this decision, we draw Patent Owner's attention to the April 2019 *Notice Regarding Options for Amendments by Patent Owner Through Reissue or Reexamination During a Pending AIA Trial Proceeding*. *See* 84 Fed. Reg. 16,654 (Apr. 22, 2019). If Patent Owner chooses to file a reissue application or a request for reexamination of the challenged patent, we remind Patent Owner of its continuing obligation to notify the Board of any such related matters in updated mandatory notices. *See* 37 C.F.R. § 42.8(a)(3), (b)(2)

The outcome for the Challenged Claims in this proceeding is set forth in summary as follows:

Claims	35 U.S.C. §	References/ Basis	Claims Shown Unpatentable	Claims Not shown Unpatentable
1, 4, 7–12, 14, 17, 18, 20–27	103(a)	Schonenberger, Socwell, Magid, Sclater		1, 4, 7–12, 14, 17, 18, 20–27
1, 4, 7–12, 14, 17, 18, 20–27	103(a)	Schonenberger, Socwell, Magid, Sclater		1, 4, 7–12, 14, 17, 18, 20–27
1, 4, 7–12, 14, 17, 18, 20–25	103(a)	Socwell, Magid, Sclater	1, 4, 7–12, 14, 17, 21–25	18, 20
Overall Outcome			1, 4, 7–12, 14, 17, 21–25	18, 20, 26, 27

IV. ORDER

In consideration of the foregoing, it is hereby:

ORDERED that claims 1, 4, 7–12, 14, 17, and 21–25 are unpatentable; and

FURTHER ORDERED that, because this is a Final Written Decision, the parties to the proceeding seeking judicial review of the decision must comply with the notice and service requirements of 37 C.F.R. § 90.2.

FOR PETITIONER:

John M. Halan
Andrew B. Turner
Rebecca J. Cantor
Kyle G. Konz
BROOKS KUSHMAN P.C.
jhalan@brookskushman.com
aturner@brookskushman.com
rcantor@brookskushman.com
kkonz@brookskushman.com

FOR PATENT OWNER:

Richard J. McKenna
Kadie M. Jelenchick
FOLEY & LARDNER LLP
rmckenna@foley.com
kjelenchick@foley.com