US008398037B2

(12) **United States Patent**
**Johnson et al.**

(10) **Patent No.: US 8,398,037 B2**
(45) **Date of Patent: Mar. 19, 2013**

(54) **EQUIPMENT SUPPORT**

(76) Inventors: **Joseph M. Johnson**, San Luis Obispo, CA (US); **Matthew L. Burk**, San Luis Obispo, CA (US)

( * ) Notice: Subject to any disclaimer, the term of this patent is extended or adjusted under 35 U.S.C. 154(b) by 85 days.

(21) Appl. No.: **13/032,149**

(22) Filed: **Feb. 22, 2011**

(65) **Prior Publication Data**

US 2011/0260016 A1 Oct. 27, 2011

**Related U.S. Application Data**

(60) Provisional application No. 61/343,114, filed on Apr. 23, 2010.

(51) **Int. Cl.**
***F16M 11/00*** (2006.01)

(52) **U.S. Cl.** ..... **248/163.2**; 248/168; 248/177.1

(58) **Field of Classification Search** ..... 248/168, 248/163.1, 163.2, 166, 167, 177.1, 176.3, 248/188.8
See application file for complete search history.

(56) **References Cited**

U.S. PATENT DOCUMENTS

| | | | | |
|---|---|---|---|---|
| 911,508 | A * | 2/1909 | Look | 248/167 |
| 2004/0129843 | A1 * | 7/2004 | Pernstich et al. | 248/163.1 |
| 2006/0175848 | A1 * | 8/2006 | Akad | 293/133 |
| 2009/0250567 | A1 * | 10/2009 | Raynaud | 248/168 |
| 2011/0031358 | A1 * | 2/2011 | Fischer | 248/168 |

* cited by examiner

*Primary Examiner* — Ramon Ramirez
(74) *Attorney, Agent, or Firm* — Chernoff Vilhauer McClung & Stenzel, LLP

(57) **ABSTRACT**

A support having a plurality of elongate hollow leg members, each of which is at least partially supporting an apex selectively, detachably mountable to equipment. At least one leg member has a circumferential wall of a thickness along a major portion of its length no more than approximately 0.04 inches.

**28 Claims, 16 Drawing Sheets**

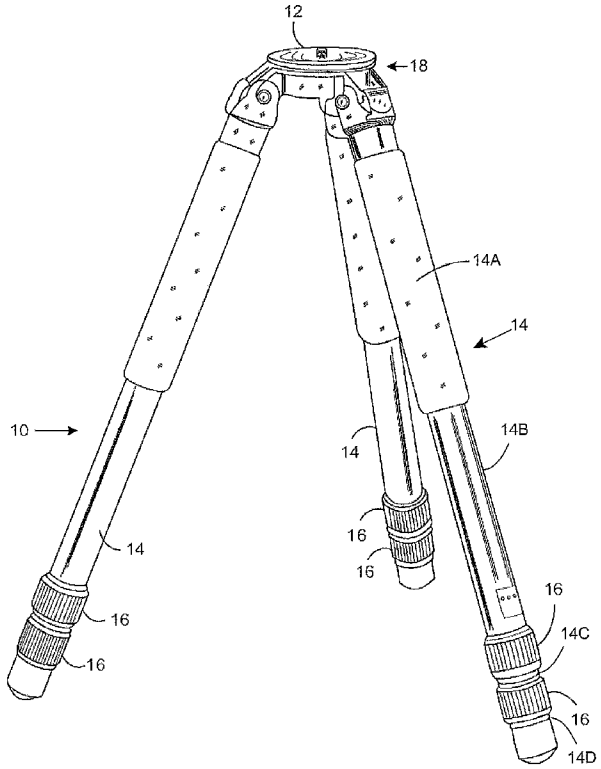


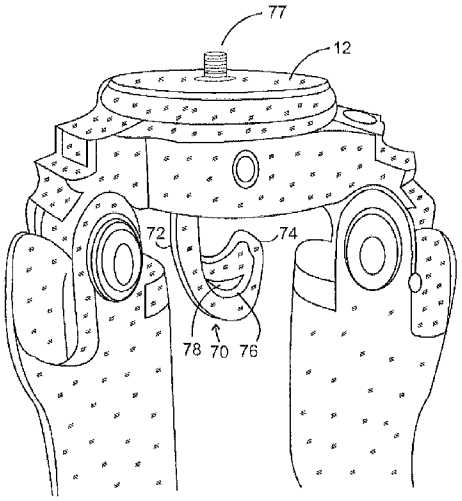

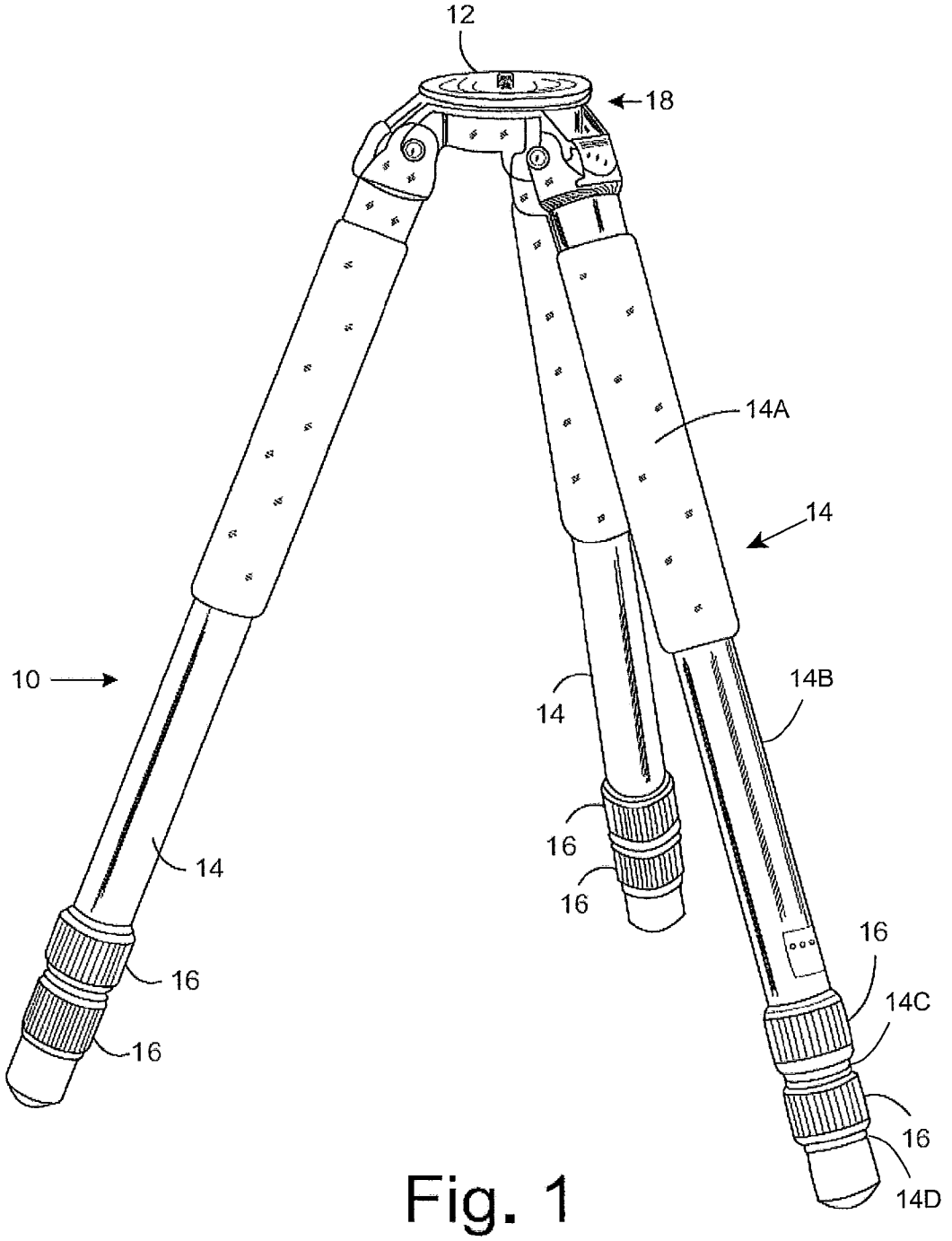


Fig. 1

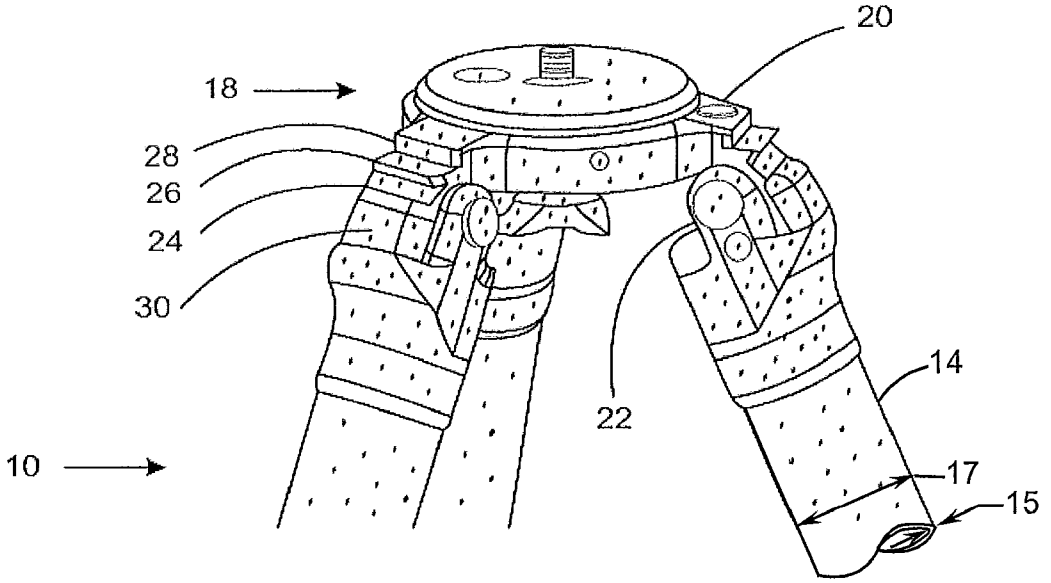


Fig. 2

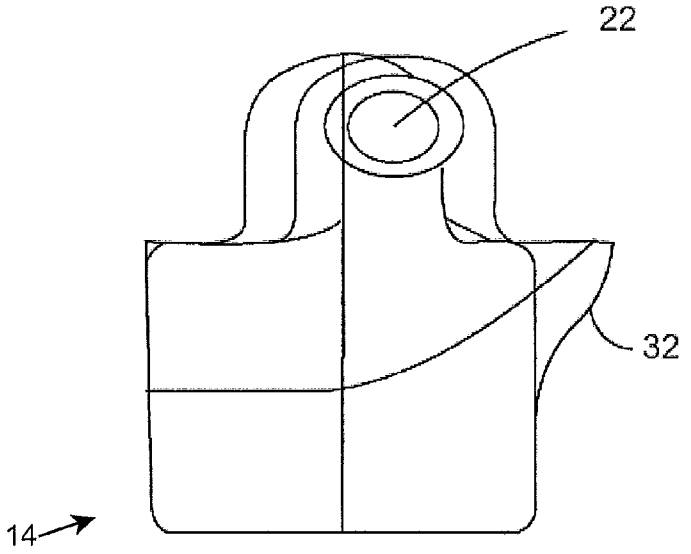


Fig. 3A

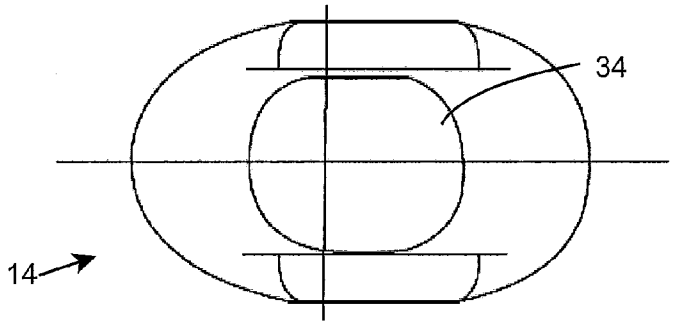


Fig. 3B

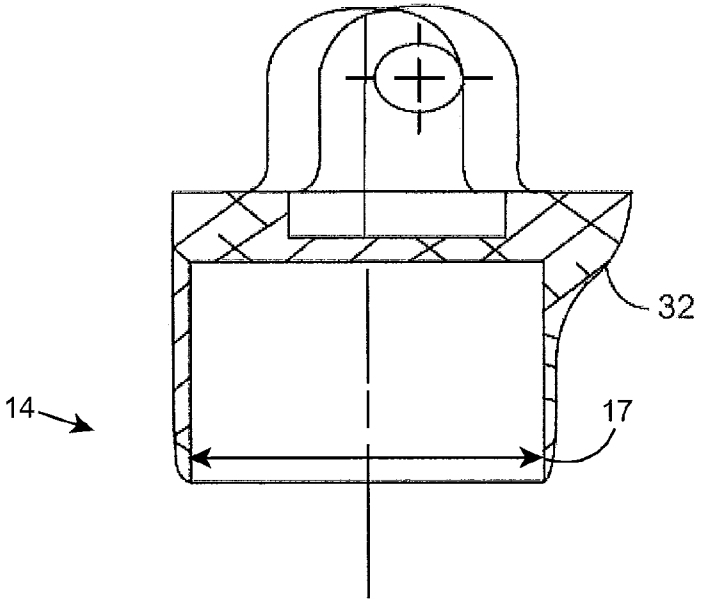


Fig. 3C

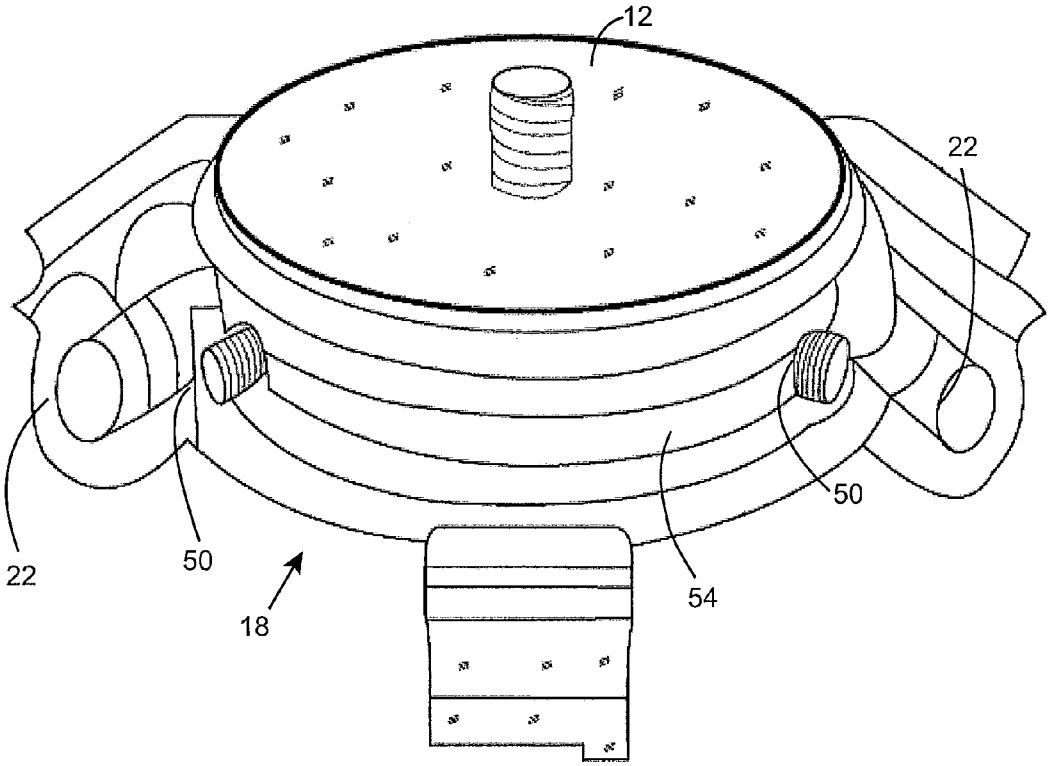


Fig. 4A

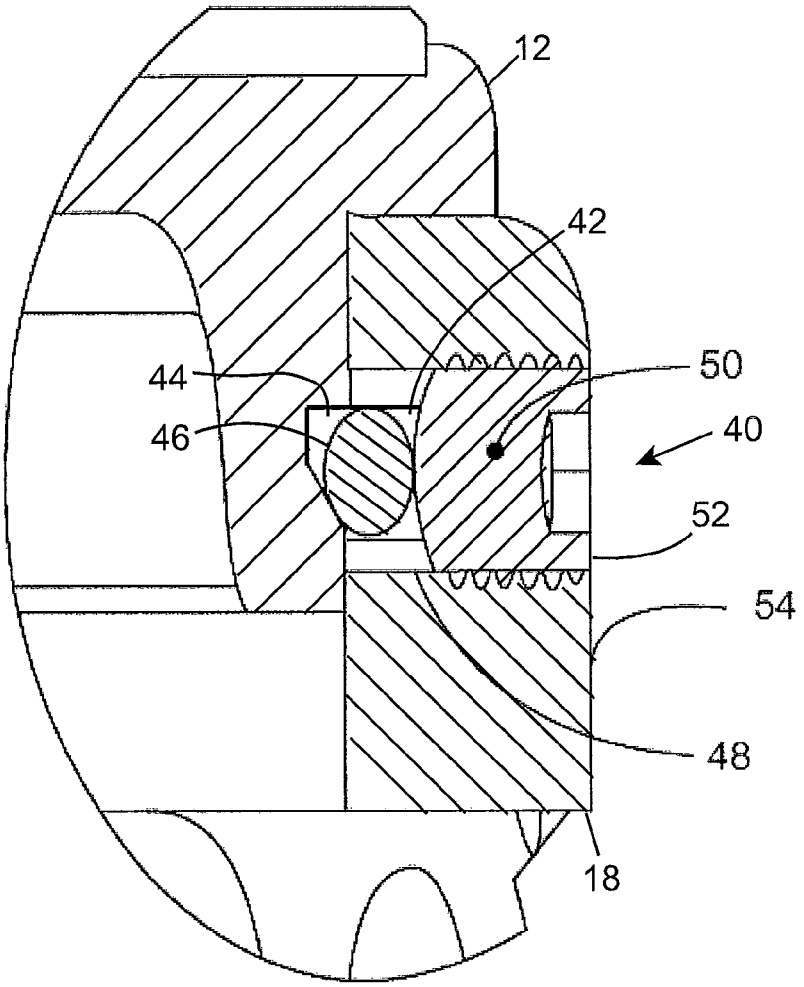


Fig. 4B

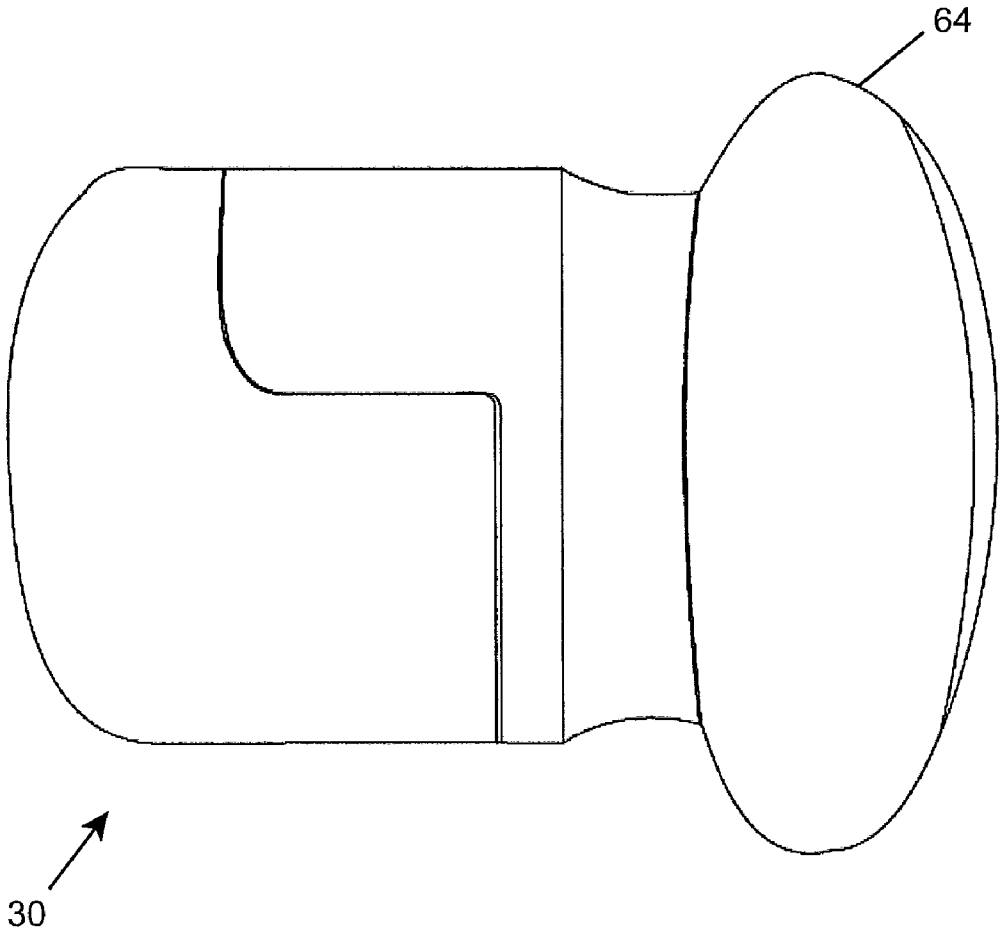


Fig. 5A

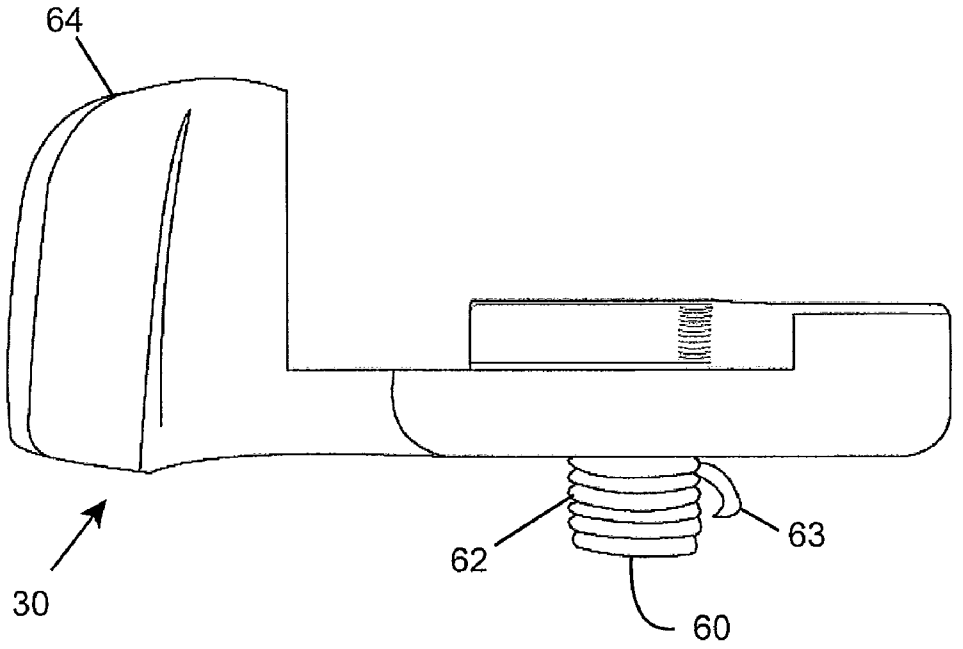


Fig. 5B

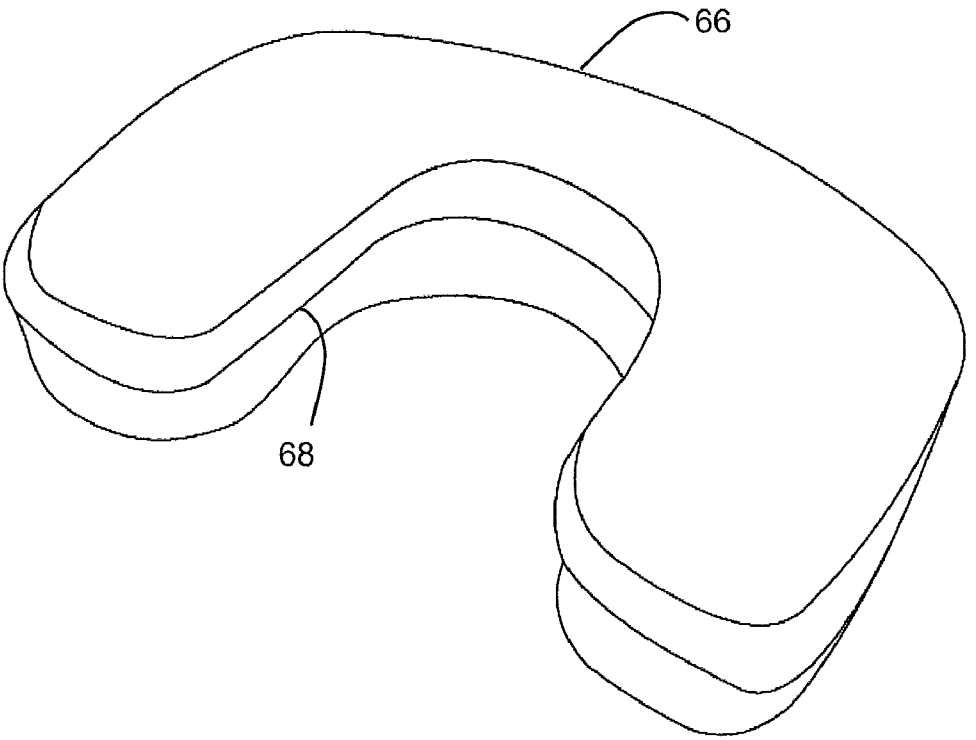


Fig. 6A

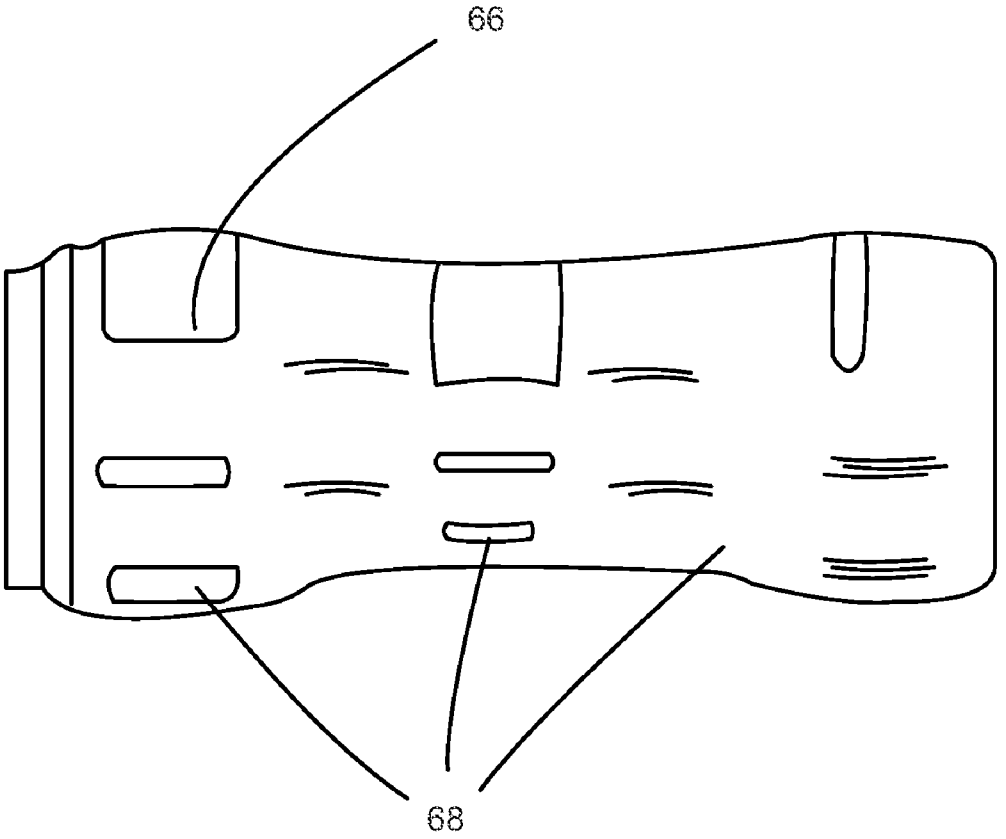


Fig. 6B

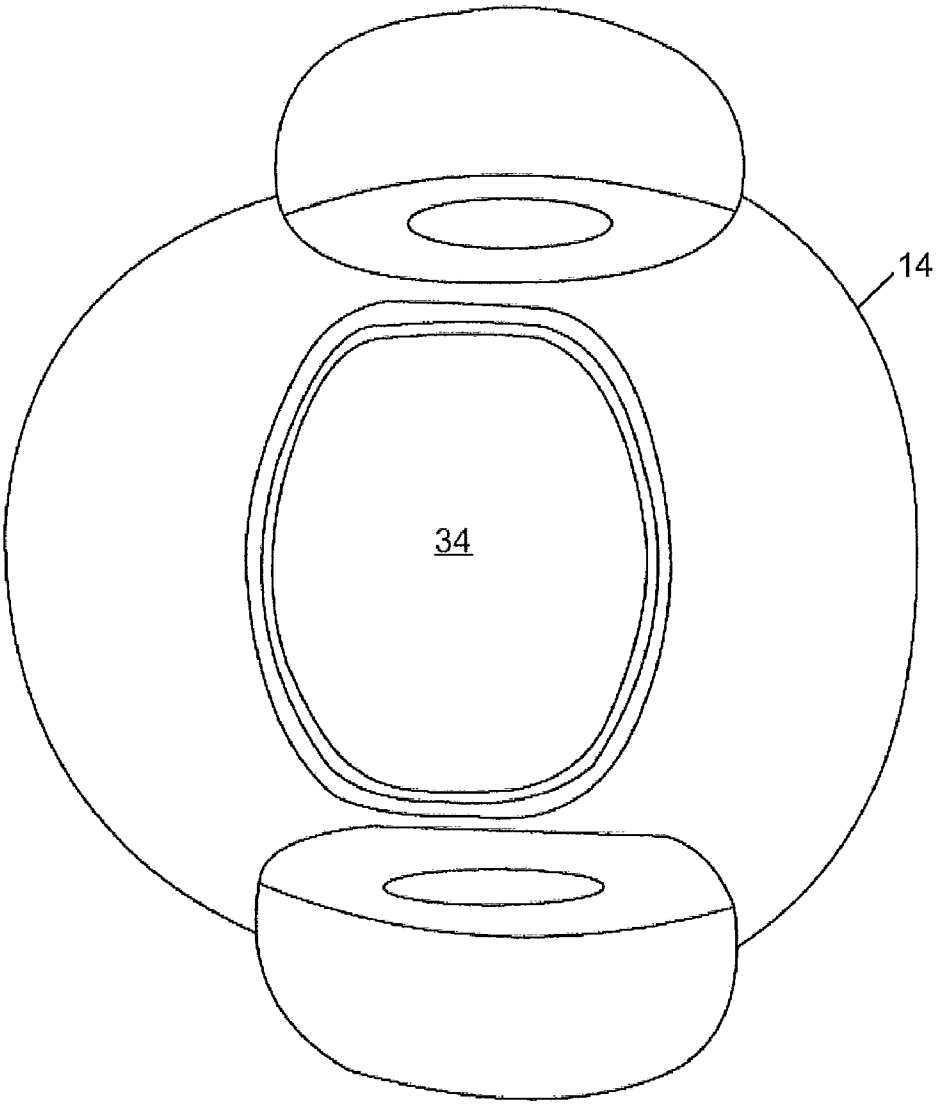


Fig. 6C

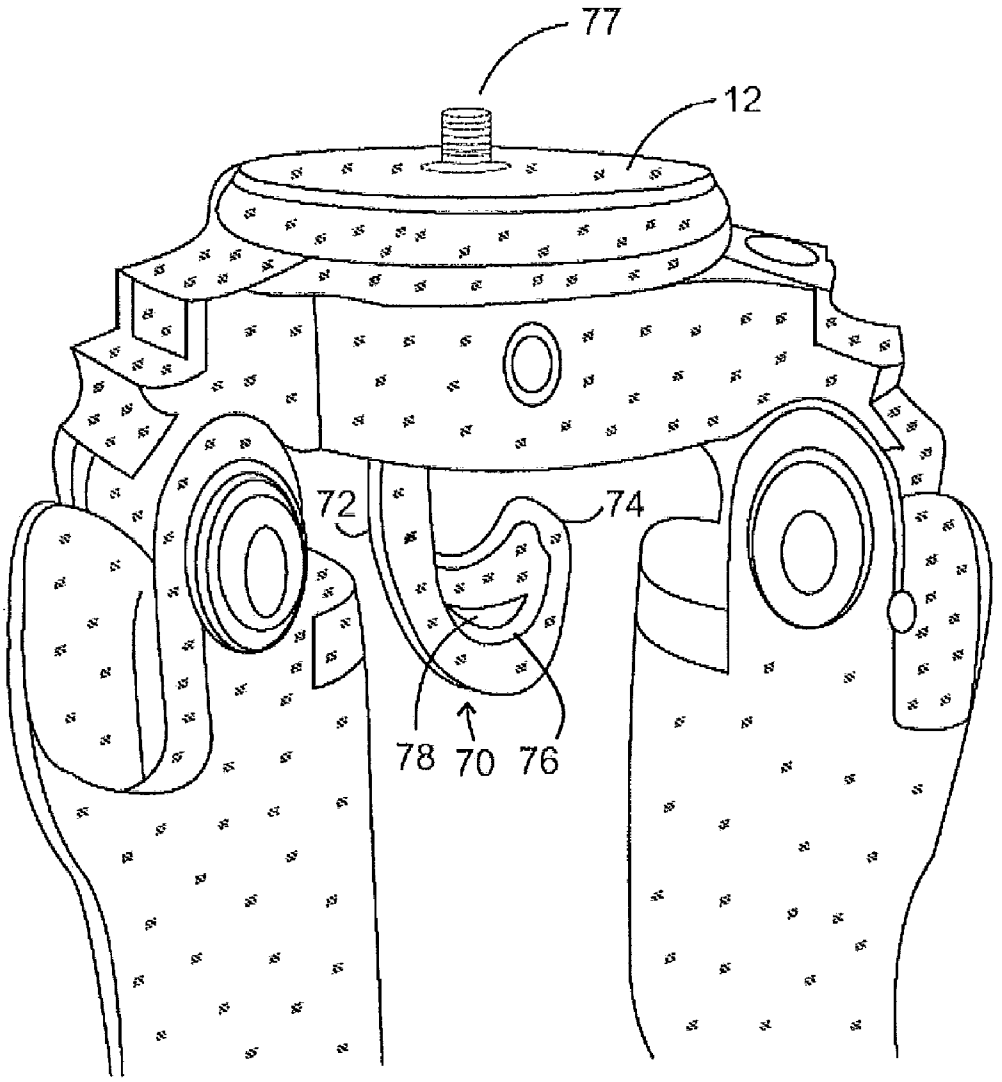


Fig. 7A

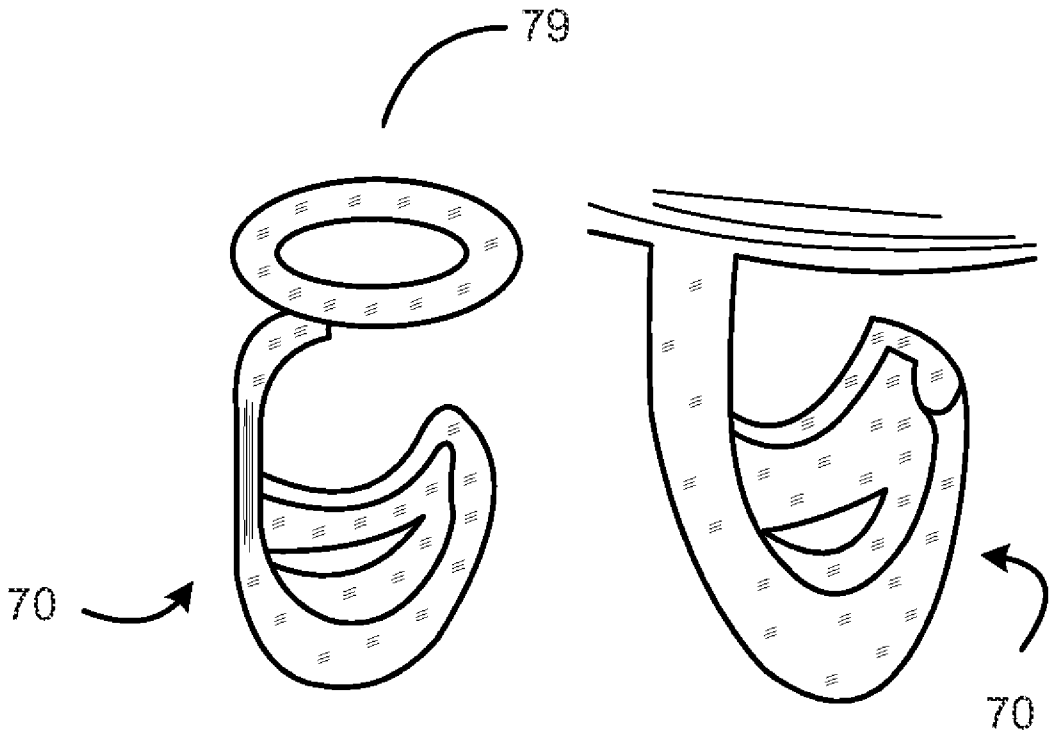


Fig. 7B

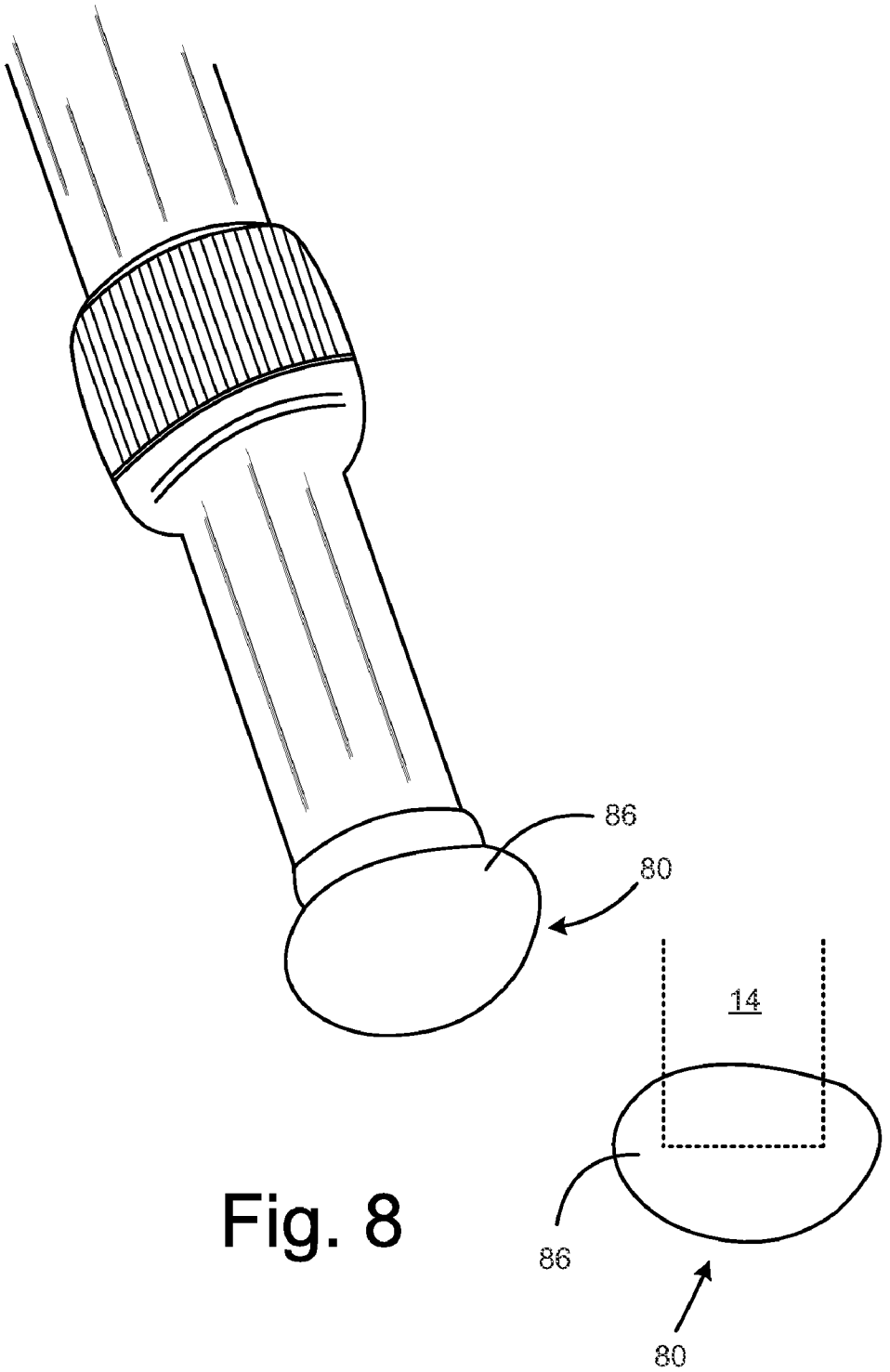


Fig. 8

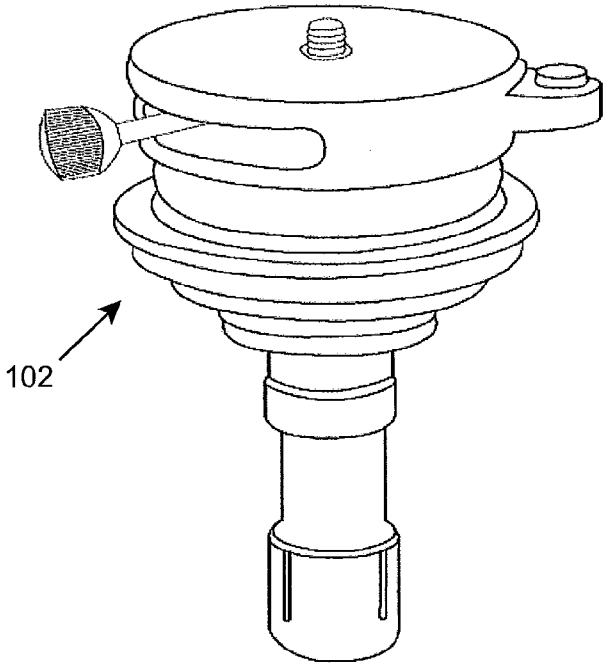


Fig. 9

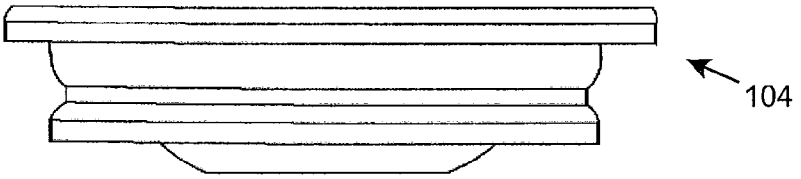


Fig. 10A

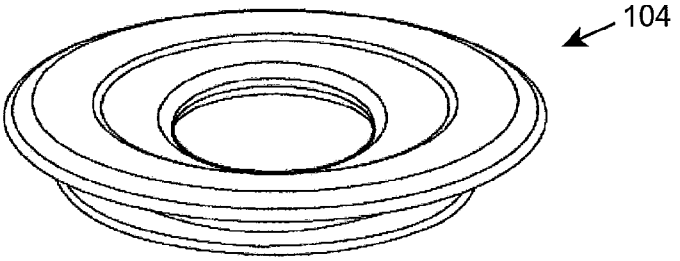


Fig. 10B

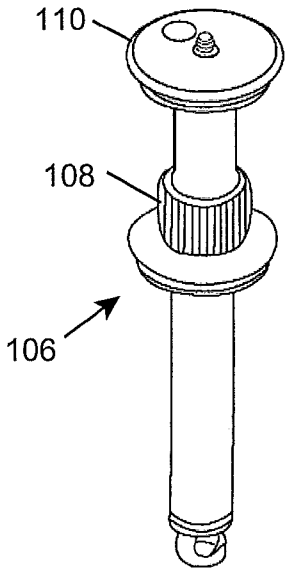


Fig. 11A

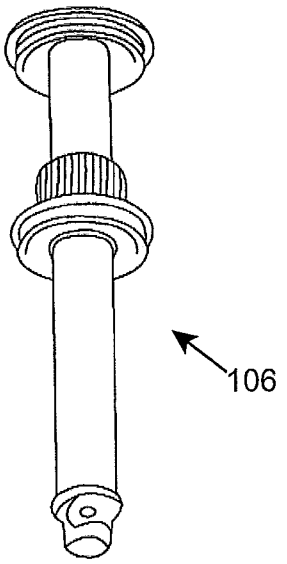


Fig. 11B

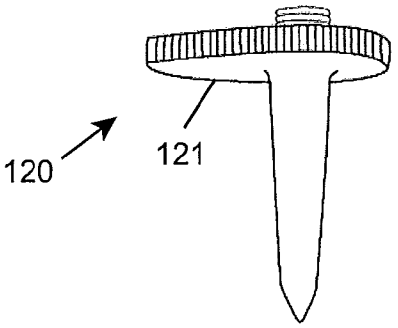


Fig. 12

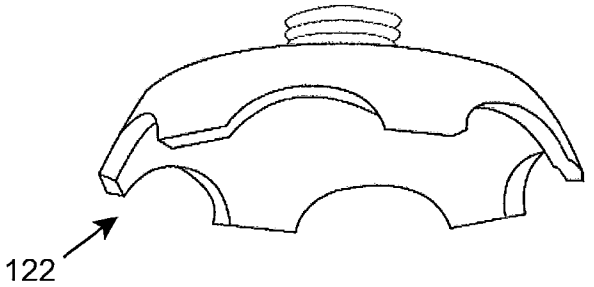


Fig. 13

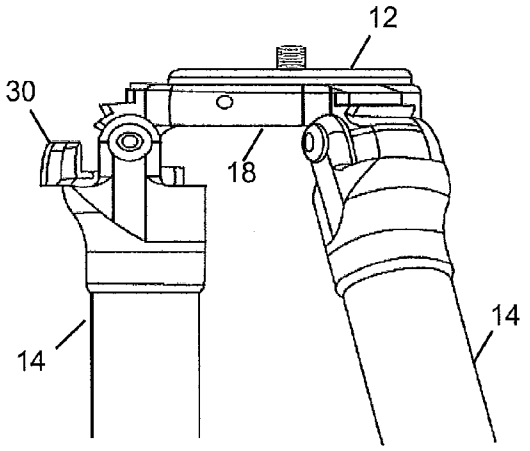


Fig. 14

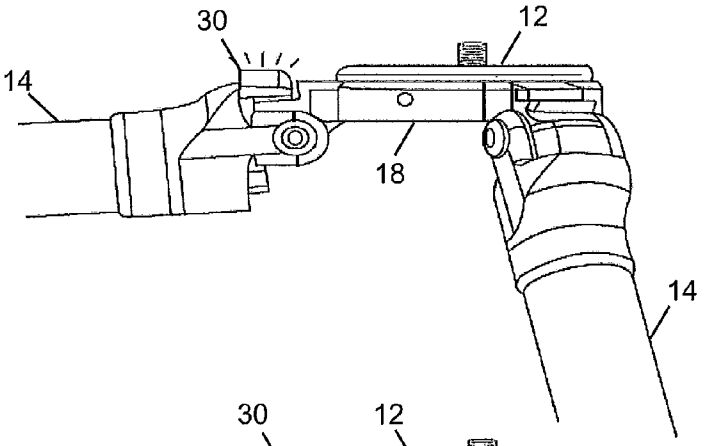


Fig. 15

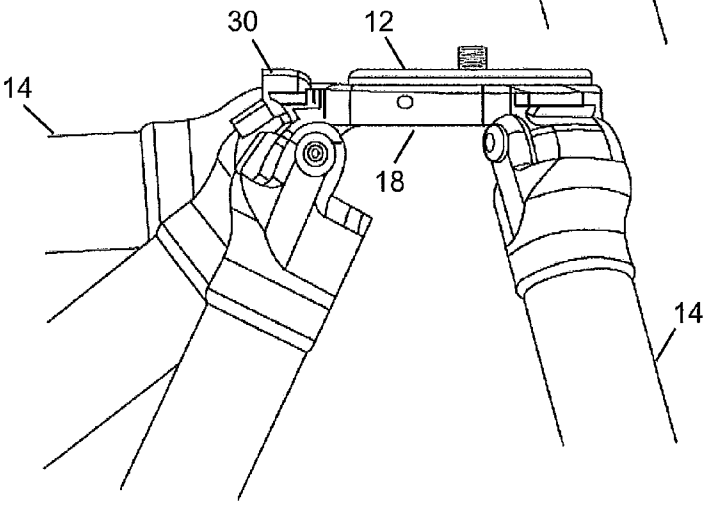


Fig. 16

# EQUIPMENT SUPPORT

## CROSS-REFERENCE TO RELATED APPLICATIONS

This application claims the benefit of U.S. Prov. App. No. 61/343,114, filed Apr. 23, 2010.

## BACKGROUND OF THE INVENTION

The present invention relates to a portable support apparatus for equipment, such as a tripod or monopod.

Equipment support apparatus has been used for many years. Typically, equipment support apparatus includes an elevated mounting surface, upon which equipment may be secured, such as a camera, telescope, musical equipment, surveying equipment, antenna, etc. The elevated mounting surface is supported by a plurality of legs, which in the case of a tripod is typically three. Other numbers of legs may likewise be used, such as a single leg monopod, two legs or four or more legs.

Equipment support apparatus, such as tripods, are designed to provide some optimal balance between a set of features. For example, one feature of a tripod is stability, as it is often desirable to insure that shaking or other movement of equipment supported by the tripod is minimized so that, for example, blur does not occur in an image taken by a camera supported on the tripod. Tripods are often used portably, hence, it is often desired to minimize the weight and/or dimensions of the tripod so that it may be carried over great distances. Unfortunately, these stability and weight considerations are often in conflict, i.e. a heavier tripod will provide a high degree of stability but will be more burdensome to carry.

Many existing tripods are both vertically collapsible with radially extendible legs. For example, a tripod may have three leg assemblies, with each leg assembly pivotally connected to an elevated equipment support so that each leg may be pivoted outwards when in use, and inwards when not in use. Also, each leg assembly may have multiple elements that selectively slide axially relative to each other. For example, a multi-stage tripod may have first, second, and third segments for each leg. To adjust the height of the tripod, the first and second leg segments are slidably movable relative to each other and the second and third leg segments are also slidably movable relative to each other. Each pair of legs may be selectively locked and unlocked at different positions. Tripods also may include an adjustable central column to change the height at which equipment is supported by the tripod at a fixed extension of the tripod legs.

A multi-stage tripod is relatively lightweight and stable, with the caveat that the tripod's height and/or footprint are sacrificed for stability rather than weight. For example, by fully pivoting the tripods legs outward, and/or only partially extending the column, the stability of the tripod is improved at the expense of height.

In view of the foregoing discussion, what is desired is an improved tripod portable support apparatus for equipment.

The foregoing and other objectives, features, and advantages of the invention will be more readily understood upon consideration of the following detailed description of the invention, taken in conjunction with the accompanying drawings.

## BRIEF DESCRIPTION OF THE SEVERAL VIEWS OF THE DRAWINGS

FIG. **1** shows a perspective view of a tripod that includes features disclosed in this specification.



FIG. **2** shows an enlarged view if the apex of the tripod of FIG. **1**.

FIG. **3**A shows a view of the upper portion of an exemplary leg attached to the apex of the tripod of FIG. **1**.

FIG. **3**B shows a top view of the upper portion of the leg of FIG. **3**A, removed from the apex of the tripod of FIG. **1**.

FIG. **3**C shows a vertical section of upper portion of the leg of FIG. **3**A.

FIG. **4**A shows an attachment mechanism for securing a platform to the apex of the tripod of FIG. **1**.

FIG. **4**B shows a sectional view of the attachment mechanism shown in FIG. **4**A.

FIG. **5**A shows an enlarged top view of an angle stop for the tripod of FIG. **1**.

FIG. **5**B shows an enlarged side view of an angle stop for the tripod of FIG. **1**.

FIG. **6**A shows an insert resting in the pocket shown in FIG. **3**B.

FIG. **6**B shows a sectional view of the insert shown in FIG. **6**A.

FIG. **6**C shows a top view of a detached leg of the tripod of FIG. **1**, with an assembled insert resting in the pocket of the leg.

FIG. **7**A shows a perspective view of a platform supported by the apex of the tripod of FIG. **1**.

FIG. **7**B shows a swivel hook mounted to the platform of FIG. **7**A.

FIG. **8** shows an exemplary foot for the legs of the tripod of FIG. **1**.

FIG. **9** illustrates a leveling panning base.

FIG. **10**A illustrates a plan view of a video bowl.

FIG. **10**B illustrates a perspective view of the video bowl of FIG. **10**A.

FIG. **11**A illustrates a first prospective view of a quick column.

FIG. **11**B illustrates a second prospective view of the quick column of FIG. **11**A.

FIG. **12** illustrates a stomping spike.

FIG. **13** illustrates a rock claw.

FIG. **14** illustrates an exemplary ratcheting mechanism.

FIG. **15** is a second illustration of the exemplary ratcheting mechanism of FIG. **14**.

FIG. **16** is a third illustration of the exemplary ratcheting mechanism of FIG. **14**.

## DETAILED DESCRIPTION OF PREFERRED EMBODIMENT

FIG. **1** shows an exemplary tripod **10**. Though features are discussed in reference to the depicted tripod, it should be understood that the features may be implemented in an equipment support having any number of legs.

The tripod **10** may include a platform **12** for detachably securing equipment to the tripod **10** using a set screw or other attachment mechanism. The tripod **10** may include a plurality of legs **14** to support the platform **12** at an elevated position. The platform **12** may be detachably mounted within an apex **18** of the tripod, which may be a ring into which the platform **12** may be secured. Each of the legs **14** may include a plurality of telescoping leg sections that nest together in a retracted position by releasing an appropriate locking mechanism **16**. Although the platform **12** is shown as having a fixed vertical position with respect to the apex **18**, it is understood that the platform **12** may be supported by a vertically-extensible column slidably engaged with the apex **18**. The platform **12** may include a spirit level **20** (see FIG. **2**).

Leofoto 1001
IPR of US Pat. No. 8,398,037
Page 18 of 22

Referring also to FIG. **2**, each of the legs **14** preferably pivots about a respective axis **22** proximate the apex **18**. Through a selective choice of respective angles between each of the legs **14** and the apex **18**, along with a desired telescoped length of each respective leg, equipment attached to the tripod **10** may be supported on a wide variety of terrain.

As previously noted, two competing characteristics of a tripod are stability and portability. Heavier tripods typically having large legs and footprints which can be extremely stable even while fully extended and supporting heavy equipment above the apex. Unfortunately, heavy tripods tend to be bulky and burdensome to carry to different locations. A desirable tripod **10** achieves high stability, relative to its weight, and is also able to collapse to a very portable size.

Each of the legs **14** is preferably formed of carbon-fiber material selected for its light weight and high strength. The tripod legs **14** may include a plurality of hollow, nested telescoping sections, for examples, leg sections **14**A, **14**B, **14**C and **14**D, where the largest section of each leg, into which the other leg sections selectively retract, is preferably less than approximately 3⁄32 inches thick **15** along a major portion of its length, more preferably less than approximately 0.08 inches thick along a major portion of its length, and even more preferably less than approximately 0.04 inches thick along a major portion of its length. The term "approximately" in this context means within a range of plus and/or minus 10%.

Although conventional wisdom would suggest that such a thin wall thickness **15** would detract from the strength of the respective legs, and hence hamper the ability of the tripod **10** to support large weights in a stable manner, the tripod **10** overcomes such a limitation by having legs of a relatively large diameter **17**. For example, the largest section of the legs **14**, into which the other leg sections selectively retract, may preferably be approximately 1.5 inches or greater along a major portion of its length.

Referring to FIGS. **3**A-**3**C, the tripod **10** preferably includes legs **14** that pivot about the axis **22** off-center from a longitudinal centerline of the respective legs **14**. This off-center pivot axis serves two principal functions. First, the off-center pivot axis **22** for the respective legs allows the legs to pivot inwardly to occupy a smaller circumference when collapsed and carried, than the tripod **10** would occupy with a pivot axis **22** centered with the respective leg. Furthermore, the off-center pivot axis enhances the stability of the tripod **10** when extended and used. Preferably the pivot axis **22** is offset from the centerline of a respectively associated leg **14** by approximately one tenth the diameter of the leg **14** or more. More preferably the pivot axis **22** is offset from the centerline of a respectively associated leg **14** by approximately one eighth the diameter of the leg **14** or more. Even more preferably, the pivot axis **22** is offset from the centerline of a respectively associated leg **14** by approximately one sixth the diameter of the leg **14** or more.

This off-center pivot is further explained in referring to FIGS. **2** and **3**C. The tripod **10** preferably includes graduated ratcheting surfaces **24**, **26**, and **28**, along with a retractable angle stop **30**. In operation, the pivot angle of the legs may be adjusted so that the angle stop **30** rests against a desired one of the ratcheting surfaces **24**, **26**, or **28**, which then prevent the weight of the attached equipment from further pivoting the legs. The angle stop **30** transfers loading forces from the apex **18** to the legs **14**. If the angle stop **30** of the tripod, particularly when positioned on the upper ratcheting surface **28**, is not aligned with the wall of the leg to which it is associated, then the transmitted load by the equipment creates large bending moments on the legs **14**. With an off-center pivot axis **22**, the tripod **10** aligns the loading forces with the walls of the legs **14** throughout the range of movement of each leg as it pivots about the axis **22**. To further align the loading forces with the legs, each of the legs **14** of the tripod **10** may have, at the end proximate the angle stop, an outwardly-bulging support surface **32** to fully support the angle stop **30**.

Tripods are often carried from one location to another with the equipment, e.g. a camera, still attached. In this situation, it is sometimes the base of the platform **12**, and hence the equipment, that is not securely attached to apex **18** causing the equipment to detach and fall to the ground. This can be disastrous if the equipment is expensive. To reduce the likelihood of such a disastrous event, the tripod **10** may include a visual warning system **40**, illustrated in FIGS. **4**A and **4**B, that indicates to a user when the platform **12** is not securely fastened to the apex **18**. Both the apex **18** and the platform **12** may include respective channels **42** and **44** that align with each other when the platform **12** rests in the apex **18**. A ring-shaped spring **46** is pre-compressed into the channel **42** of the apex **18**, preferably extending over a major portion of the circumference of the apex **18**, e.g. approximately 270 degrees or greater. One or more threaded slots **48** are formed in the apex **18**, perpendicular to and intersecting the groove **42**, so that respective warning members **50** may be inserted into the respective threaded slots **48**.

When it is desired to secure the platform **12** to the apex **18**, each of the warning members **50** may be rotated in their respective slots in a direction that pushes the spring **46** inward to engage with the groove **44** of the platform **12**, preventing its separation from the apex **18**. When it is desired to release the platform **12** from the apex **18**, each of the warning members **50** may be rotated in their respective slots in an opposite direction to allow the spring **46** to move outward to disengage from the groove **44** of the platform **12**, allowing its separation from the apex **18**. Preferably, the warning members **50** include an outer surface **52** that is flush with the surface **54** of the apex **18** when the platform **12** is fully locked into the apex **18**. In this manner, a user can be quickly visually warned when the platform is not securely engaged because the warning members **50** will be extended radially-outward from the outer surface **54** of the apex **18**.

Preferably, the tripod **10** includes several warning members **50** spaced apart around the circumference of the apex **18** so that a user may be warned that a platform is not securely attached when the tripod when viewed from multiple angles. For example, the tripod **10** may include three warning members **50** spaced around the circumference of the tripod **10**.

Referring to FIGS. **2**, **5**A, **5**B, **6**A, and **6**B, the tripod **10** may include a ratcheting mechanism for quickly locking the leg **14** into a desired position. As noted previously, an angle stop **30** prevents legs from pivoting under the weight of a load whenever the angle stop **30** bears against any of the ratcheting surfaces **24**, **26**, and **28**, as shown in FIG. **2**. The legs **14** of the tripod **10** can be quickly snapped against a desired one of the surfaces **24**, **26**, and **28**. The angle stop **30** preferably includes a pin **60** around which is positioned an engagement spring **62**. The engagement spring **62** may slidably engage with a curved channel **68** of an insert member **66** positioned in a pocket **34** of a respective leg **14**, as shown in FIG. **6**C. The curved channel **68** is shaped, and the insert member **66** is sized within the pocket **34**, so that the spring **62** is never fully uncompressed, i.e. cannot through its own spring action be fully removed from the channel **68** while the insert **66** is fitted in the pocket **34** of an assembled tripod **10**.

In operation, a user pulls outwardly on a tab **64** of the angle stop **30** so as to disengage the angle stop **30**, for example, from a respective ratcheting surface. When pulling the tab **64**, the spring **62** will move inwardly into the channel to a fully

Leofoto 1001
IPR of US Pat. No. 8,398,037
Page 19 of 22

compressed position where the lateral spring force on the channel **68** such that the spring **62** will not move according to its own spring force in a direction out of the channel **68**. As the leg **14** is pivoted upwards to a position proximate the highest ratcheting surface **28**, however, gravity will slide the angle stop **30** a sufficient distance that the lateral wings **63** of the spring move along the curved surface of the channel **68** to apply a force against the channel that cause the pin **60**, and hence the angle stop **30**, to snap against the upper ratcheting surface **28**. As the leg is manually rotated downwards, this spring force will cause the angle stop **30** to successively snap into position against each successively lower ratcheting surface **26** and **24**. In this manner, the described ratcheting mechanism may be used to very quickly lock a leg into any one of a desired number of pre-set angular positions.

Referring to FIGS. **14**, **15**, and **16**, an exemplary operation of the ratcheting mechanism is shown. The leg **14** is preferably swung inwardly slightly and the angle stop **30** is disengaged by sliding it outwardly. Then the leg is swung to a more horizontal position at which the angle stop will preferably automatically engage. Then the leg is lowered while the angle stop will ratchet down automatically.

Referring to FIGS. **7**A and **7**B, the tripod **10** may include a platform **12** having a fastener **70** attached to the bottom surface of the platform **12**. The fastener **70** is preferably shaped, in profile, as a hook with a leg portion **72** and an upwardly-directed tail portion **74**, thereby forming a generally concave surface **76** into which, for example, a strap supporting a camera back may be suspended from the fastener to provide additional weight on the tripod **10** for further stabilization. The term concave, in reference to the fastener **70** does not require a smoothly-curved surface **76**, as the hook shape of the fastener **70** may be achieved by square or other angles, as well. The surface **76** preferably defines closed-loop aperture **78** by which a carabineer or similar attachment device may be securely attached to the fastener **70**. The fastener **70** preferably swivels about a vertical axis so that the fastener **70** may be easily oriented to a position that most conveniently allows a weighted object to be slung from the tripod **10**. In this vein, the fastener **70** preferably includes an opening **79** through which a fastening screw **77**, used to secure equipment to the platform **12**, also secures the fastener **70** to the lower surface of the platform **12**.

Referring to FIG. **8**, each of the legs **14** of the tripod **10** may include a foot **80** having a shape that includes an upper portion secured to a respective leg and a lower portion defining a convex surface **86** that extends radially beyond the diameter of the respective leg **14** to which the foot **80** is attached. This mushroom shape ensures that the convex surface **86** is tangent to a supporting surface, such as the ground, over the full arc through which the leg pivots. This serves two functions. First, it ensures that the walls of the leg **14** do not contact the ground, enhancing the durability of the tripod **10**. Also, the contact between the foot **80**, which may be rubber for example, and the supporting surface inhibits slippage of the leg **14** regardless of the angle of the leg **14** relative to the apex **18**.

Referring to FIG. **9**, a leveling panning base **102** may be engaged with the apex of the tripod in a manner similar to the manner of engagement of the platform.

Referring to FIGS. **10**A and **10**B, a video bowl **104** may be engaged within the apex of the tripod, in a manner similar to that of the platform. In this manner, a ball base of a standard video camera may detachably engage with the video bowl.

Referring to FIGS. **11**A and **11**B, a quick column **106** may be engaged within the apex of the tripod, in a manner similar to that of the platform. By loosening and tightening the knurled stem **108**, the head **110** of the quick column **106** may be raised and lowered, and selectively secured in position. This provides a platform for equipment of variable height in a manner generally independent of the height of the tripod.

Referring to FIG. **12**, stomping spikes **120** may be engaged at the end of the legs, thereby replacing the typical feet. The spikes include a teardrop shaped pedal **121** to allow for them to be readily driven into the ground with the user's foot. This permits stabilization of the tripod in heavy crosswinds and on shifty terrain.

Referring to FIG. **13**, rock claws **122** may be engaged at the ends of the legs, thereby replacing the typical feet. The rock claws include a cup shape to allow them to be readily engaged with rocks and other hard surfaces. This permits stabilization of the tripod on hard and wet terrain.

The terms and expressions that have been employed in the foregoing specification are used therein as terms of description and not of limitation, and there is no intention, in the use of such terms and expressions, of excluding equivalents of the features shown and described or portions thereof, it being recognized that the scope of the invention is defined and limited only the claims that follow.

We claim:

**1**. A support having a plurality of elongate hollow leg members, each at least partially supporting an apex selectively, detachably mountable to equipment and defining a supporting surface for said equipment, at least one leg member selectively pivoting about a pivot axis parallel to said supporting surface and at an off-center position in relation to a circumference of said at least one leg member.

**2**. The support of claim **1** where said at least one leg member is operatively engaged with a selectively releasable angle stop that, together with said apex, defines a plurality of fixed angular positions around said pivot axis at which angular rotation of said at least one leg member around said pivot axis is inhibited.

**3**. The support of claim **2** where said angle stop has a lower surface that bears against said at least one leg member, and where said at least one leg member includes an off-center support surface that bears against said angle stop along a major portion of said lower surface in each of said plurality of fixed angular positions.

**4**. The support of claim **3** where said off-center support surface bears against said angle stop along all of said lower surface in each of said plurality of fixed angular positions.

**5**. The support of claim **2** where said apex defines a supporting surface for said equipment, and where said angle stop automatically ratchets into a next sequential one of said fixed angular positions as said at least one leg member is pivoted towards a perpendicular position with respect to said supporting surface.

**6**. A support having an apex selectively, detachably mountable to a platform for securing equipment to said platform, said apex comprising:

(a) an attachment member selectively attachable to a said platform; and

(b) at least one warning member having a first state that indicates that said platform is securely engaged with said apex and a second state that indicates that said platform is not securely engaged with said apex.

**7**. The support of claim **6** where said at least one warning member is viewable from any angle around said tripod.

**8**. The support of claim **6** where said apex forms a perimeter surface into which said platform is selectively insertable.

**9**. The support of claim **8** including a spring member compressed into a recessed position within said perimeter surface.

Leofoto 1001
IPR of US Pat. No. 8,398,037
Page 20 of 22

**10**. The support of claim **9** including at least one locking member that selectively causes said spring member to engage with a said platform mounted in said apex.

**11**. The support of claim **10** where said locking member is a said at least one warning member.

**12**. The support of claim **11** where said locking member has a visible warning surface flush with an exterior surface of said apex when said spring member is engaged with said platform.

**13**. The support of claim **9** where said spring member extends around a major portion of said perimeter surface.

**14**. The support of claim **13** including plural locking members that selectively cause said spring member to engage with a said platform mounted in said apex at locations approximately equidistant from each other.

**15**. The support of claim **6** where said platform is attachable to said attachment member at a selective height relative to said apex.

**16**. A support comprising:

(a) at least one elongate leg element at least partially supporting an apex selectively, detachably mountable to equipment;

(b) a selectively releasable angle stop that, together with said apex, defines a plurality of fixed angular positions around a pivot axis at which angular rotation of said at least one leg element around said pivot axis in a first direction is selectively, automatically inhibited; where

(c) said angle stop has a first position that permits manual rotation of said leg element in said first direction without said angle stop engaging with said apex in at least one of said fixed angular positions, and a second position where manual rotation of said leg element in a second direction causes said angle stop to automatically engage into a next sequential one of said fixed angular positions.

**17**. The support of claim **16** where said apex has a support surface for supporting said equipment, and said first position causes said angle stop to engage in only the one of said fixed angular positions closest to said support surface.

**18**. A support comprising:

(a) an apex supported by at least one elongate leg capable of pivoting about a pivot axis parallel to a support surface of said apex; where

(b) said pivot axis is offset from a centerline of a cross section of said elongate leg, said centerline parallel to said pivot axis.

**19**. The support of claim **18** where said offset measures at least one-tenth the minimum diameter of said elongate leg.

**20**. The support of claim **18** where said offset measures at least one-eighth the minimum diameter of said elongate leg.

**21**. The support of claim **18** where said offset measures approximately one-sixth the minimum diameter of said elongate leg.

**22**. A support for supporting equipment, said comprising:

(a) at least one elongate leg element at least partially supporting an apex selectively, detachably mountable to equipment, where said leg includes a first end proximate said apex and a second end distal said apex, and where said leg is pivotal about an axis proximate said first end throughout a limited arc; and

(b) a foot at said second end having a curved surface that, while said support supports equipment above a supporting surface, is tangent to said supporting surface throughout said arc.

**23**. The support of claim **22** where said curved surface is convex and extends radially beyond an outer diameter of said leg proximate said foot.

**24**. The support of claim **22** where said foot has a mushroom shape.

**25**. A platform selectively, detachably mountable to an apex of a support having a plurality of legs extending from said apex, said platform including an open-ended hook integrally forming a closed-loop aperture, said hook rotatable about a substantially vertical axis.

**26**. The platform of claim **25** where said hook is capable of selectively, detachably supporting a weight from a closed-loop strap.

**27**. The platform of claim **26** where said hook is capable of securely interlocking with a carabineer.

**28**. The platform of claim **26** where said aperture is generally perpendicular to said hook.

* * * * *

UNITED STATES PATENT AND TRADEMARK OFFICE

# CERTIFICATE OF CORRECTION



PATENT NO. : 8,398,037 B2
APPLICATION NO. : 13/032149
DATED : March 19, 2013
INVENTOR(S) : Joseph M. Johnson et al.

It is certified that error appears in the above-identified patent and that said Letters Patent is hereby corrected as shown below:

In the Claims

**Col. 6, Line 63** - Change "tripod" to read --apex--.

Signed and Sealed this
First Day of December, 2015

Michelle K. Lee

Michelle K. Lee
*Director of the United States Patent and Trademark Office*