US010080178B2

(12) **United States Patent**
Stapleton et al.

(10) **Patent No.: US 10,080,178 B2**
(45) **Date of Patent: *Sep. 18, 2018**

(54) **DISTRIBUTED ANTENNA SYSTEM**

(71) Applicant: **Dali Wireless, Inc.**, Menlo Park, CA (US)

(72) Inventors: **Shawn Patrick Stapleton**, Burnaby (CA); **Paul Lemson**, Woodinvile, WA (US); **Bin Lin**, Burnaby (CA); **Albert S. Lee**, San Mateo, CA (US)

(73) Assignee: **Dali Wireless, Inc.**, Melo Park, CA (US)

(*) Notice: Subject to any disclaimer, the term of this patent is extended or adjusted under 35 U.S.C. 154(b) by 0 days.

This patent is subject to a terminal disclaimer.

(21) Appl. No.: **15/223,819**

(22) Filed: **Jul. 29, 2016**

(65) **Prior Publication Data**

US 2017/0055198 A1 Feb. 23, 2017

Related U.S. Application Data

(63) Continuation of application No. 14/800,515, filed on Jul. 15, 2015, now Pat. No. 9,419,837, which is a (Continued)

(51) **Int. Cl.**
H04W 40/02 (2009.01)
H03F 1/32 (2006.01)
(Continued)

(52) **U.S. Cl.**
CPC ***H04W 40/02*** (2013.01); ***H03F 1/3247*** (2013.01); ***H03F 3/24*** (2013.01);
(Continued)

(58) **Field of Classification Search**
CPC H04W 40/02; H04W 72/04; H04B 7/022
See application file for complete search history.

(56) **References Cited**

U.S. PATENT DOCUMENTS

4,775,795 A 10/1988 Biehl et al.
4,999,831 A 3/1991 Grace
(Continued)

FOREIGN PATENT DOCUMENTS

CN 1774094 A 5/2006
CN 101394647 A 3/2009
(Continued)

OTHER PUBLICATIONS

Bicsi, "Network Design Basics for Cabling Professionals", 2002, 393 pages, McGraw-Hill, New York, NY, USA.
(Continued)

Primary Examiner — Wei Zhao
(74) *Attorney, Agent, or Firm* — Kilpatrick Townsend & Stockton LLP

(57) **ABSTRACT**

The present disclosure is a novel utility of a software defined radio (SDR) based Distributed Antenna System (DAS) that is field reconfigurable and support multi-modulation schemes (modulation-independent), multi-carriers, multi-frequency bands and multi-channels. The present invention enables a high degree of flexibility to manage, control, enhance, facilitate the usage and performance of a distributed wireless network such as Flexible Simulcast, automatic traffic load-balancing, network and radio resource optimization, network calibration, autonomous/assisted commissioning, carrier pooling, automatic frequency selection, frequency carrier placement, traffic monitoring, traffic tagging, pilot beacon, etc. As a result, a DAS in accordance with the present invention can increase the efficiency and traffic capacity of the operators' wireless network.

30 Claims, 8 Drawing Sheets

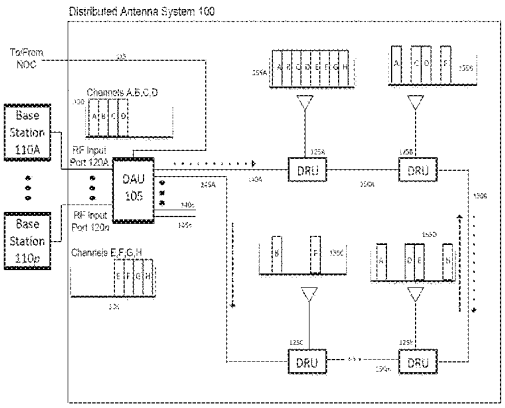

T-Mobile v. Dali Wireless Inc.
T-Mobile Ex. 1038

Related U.S. Application Data

continuation of application No. 14/260,145, filed on Apr. 23, 2014, now Pat. No. 9,137,078, which is a continuation of application No. 13/211,247, filed on Aug. 16, 2011, now Pat. No. 8,737,300.

(60) Provisional application No. 61/439,940, filed on Feb. 7, 2011.

(51) **Int. Cl.**

H03F 3/24	(2006.01)
H04L 25/03	(2006.01)
H04L 27/36	(2006.01)
H04W 24/02	(2009.01)
H04B 1/04	(2006.01)
H04W 24/04	(2009.01)
H04W 40/00	(2009.01)
H04L 27/26	(2006.01)
H04W 72/04	(2009.01)
H04B 7/022	(2017.01)

(52) **U.S. Cl.**

CPC ***H04B 1/0475*** (2013.01); ***H04B 7/022*** (2013.01); ***H04L 25/03343*** (2013.01); ***H04L 27/2618*** (2013.01); ***H04L 27/362*** (2013.01); ***H04W 24/02*** (2013.01); ***H04W 24/04*** (2013.01); ***H04W 40/00*** (2013.01); ***H04W 72/04*** (2013.01); ***H04W 72/0453*** (2013.01); *H03F 2200/336* (2013.01); *H03F 2200/57* (2013.01); *H03F 2201/3224* (2013.01); *H03F 2201/3233* (2013.01); *H04B 2001/0425* (2013.01); *H04L 2025/03414* (2013.01)

(56) **References Cited**

U.S. PATENT DOCUMENTS

5,457,557 A 10/1995 Zarem et al.
5,579,341 A 11/1996 Smith et al.
5,619,202 A 4/1997 Wilson et al.
5,621,730 A 4/1997 Kelley
5,627,879 A 5/1997 Russell et al.
5,644,622 A 7/1997 Russell et al.
5,748,683 A 5/1998 Smith et al.
5,818,883 A 10/1998 Smith et al.
5,852,651 A 12/1998 Fischer et al.
5,880,863 A 3/1999 Rideout et al.
6,005,506 A 12/1999 Bazarjani et al.
6,005,884 A 12/1999 Cook et al.
6,014,366 A 1/2000 Ichiyoshi
6,112,086 A 8/2000 Wala
6,253,094 B1 6/2001 Schmutz
6,373,611 B1 1/2002 Farhan et al.
6,353,600 B1 3/2002 Schwartz et al.
6,356,369 B1 3/2002 Farhan et al.
6,393,007 B1 5/2002 Haartsen
6,493,335 B1 12/2002 Darcie et al.
6,594,496 B2 7/2003 Schwartz
6,625,429 B1 9/2003 Yamashita
6,657,993 B1 * 12/2003 Casanova H04L 12/6418 370/230
6,697,603 B1 2/2004 Lovinggood et al.
6,704,545 B1 3/2004 Wala
6,724,737 B1 4/2004 Boyden et al.
6,785,558 B1 8/2004 Stratford et al.
6,801,767 B1 10/2004 Schwartz et al.
6,804,540 B1 10/2004 Shepherd et al.
6,826,164 B2 11/2004 Mani et al.
6,831,901 B2 12/2004 Millar
6,836,660 B1 12/2004 Wala
7,102,442 B2 9/2006 Anderson
7,145,704 B1 12/2006 Islam
7,257,328 B2 8/2007 Levinson et al.
7,283,519 B2 10/2007 Girard
7,286,507 B1 10/2007 Oh et al.
7,339,897 B2 3/2008 Larsson et al.
7,362,776 B2 4/2008 Meier et al.
7,489,632 B2 2/2009 Lakkakorpi
7,496,367 B1 2/2009 Ozturk et al.
7,610,460 B2 10/2009 Wala
7,634,536 B2 12/2009 Halasz
7,639,982 B2 12/2009 Wala
7,650,112 B2 1/2010 Utsumi et al.
7,765,294 B2 7/2010 Edwards et al.
7,787,854 B2 8/2010 Conyers et al.
7,801,038 B2 9/2010 Liao et al.
7,826,369 B2 11/2010 Filsfils et al.
7,855,977 B2 12/2010 Morrison et al.
8,010,099 B2 8/2011 Ma et al.
8,010,116 B2 8/2011 Scheinert
8,032,148 B2 10/2011 Hettstedt et al.
8,036,226 B1 10/2011 Ma et al.
8,098,572 B2 1/2012 Zhou et al.
8,139,492 B1 3/2012 Peterson et al.
8,346,091 B2 1/2013 Kummetz et al.
8,346,160 B2 1/2013 Kummetz
8,363,628 B2 1/2013 Chi et al.
8,446,530 B2 5/2013 Bellers
8,451,735 B2 5/2013 Li
8,478,331 B1 7/2013 Rogers
8,520,603 B2 8/2013 Kozisek et al.
8,527,003 B2 9/2013 Gupta et al.
8,532,242 B2 9/2013 Fischer et al.
8,548,526 B2 10/2013 Schmidt et al.
8,583,100 B2 11/2013 Koziy et al.
8,682,338 B2 3/2014 Lemson et al.
8,737,300 B2 5/2014 Stapleton et al.
8,737,454 B2 5/2014 Wala et al.
8,842,649 B2 9/2014 Liu et al.
8,855,489 B2 * 10/2014 Boldi H04J 14/0226 398/58
8,958,789 B2 2/2015 Bauman et al.
9,531,473 B2 12/2016 Lemson et al.
2001/0034223 A1 10/2001 Rieser et al.
2002/0075906 A1 6/2002 Cole et al.
2002/0086675 A1 7/2002 Mansour
2002/0093926 A1 7/2002 Kilfoyle
2002/0186436 A1 12/2002 Mani et al.
2002/0187809 A1 12/2002 Mani et al.
2002/0191565 A1 12/2002 Mani et al.
2003/0021263 A1 1/2003 Lee
2003/0143947 A1 7/2003 Lyu
2003/0181221 A1 9/2003 Nguyen
2004/0053624 A1 3/2004 Frank et al.
2005/0143091 A1 6/2005 Shapira et al.
2005/0152695 A1 * 7/2005 Sulzberger H04B 10/25756 398/59
2005/0157675 A1 7/2005 Feder et al.
2005/0181812 A1 8/2005 Scheck
2005/0206564 A1 9/2005 Mao et al.
2005/0220066 A1 10/2005 Wal et al.
2006/0094470 A1 5/2006 Wake et al.
2006/0121944 A1 6/2006 Buscaglia et al.
2006/0270366 A1 11/2006 Rozenblit et al.
2007/0019598 A1 1/2007 Prehofer
2007/0058742 A1 3/2007 Demarco et al.
2007/0064506 A1 3/2007 Bauman et al.
2007/0065078 A1 3/2007 Jiang
2007/0066234 A1 3/2007 Lastinger et al.
2007/0116046 A1 5/2007 Liu et al.
2007/0147488 A1 6/2007 Han
2007/0177552 A1 8/2007 Wu et al.
2007/0281643 A1 12/2007 Kawai
2008/0051129 A1 2/2008 Abe et al.
2008/0058018 A1 3/2008 Scheinert
2008/0107014 A1 5/2008 Huang et al.
2008/0119198 A1 5/2008 Hettstedt et al.
2008/0146146 A1 6/2008 Binder et al.
2008/0225816 A1 9/2008 Osterling et al.
2008/0240036 A1 10/2008 Liu et al.
2009/0003196 A1 1/2009 Capece et al.
2009/0170543 A1 7/2009 Mostafa et al.

T-Mobile v. Dali Wireless Inc.
T-Mobile Ex. 1038

(56) **References Cited**

U.S. PATENT DOCUMENTS

2009/0180426	A1	7/2009	Sabat et al.
2009/0191891	A1	7/2009	Ma et al.
2009/0238566	A1	9/2009	Boldi et al.
2009/0252136	A1	10/2009	Mahany et al.
2009/0274048	A1	11/2009	Sambhwani et al.
2009/0274085	A1	11/2009	Wang et al.
2009/0286484	A1	11/2009	Phung et al.
2010/0002661	A1	1/2010	Schmidt et al.
2010/0087227	A1	4/2010	Francos et al.
2010/0128676	A1	5/2010	Wu et al.
2010/0136998	A1	6/2010	Lott et al.
2010/0157901	A1	6/2010	Sanderovitz et al.
2010/0177759	A1	7/2010	Fischer et al.
2010/0177760	A1	7/2010	Cannon et al.
2010/0178936	A1	7/2010	Wala et al.
2010/0202565	A1	8/2010	Abbasfar
2010/0238904	A1*	9/2010	Zhang H04L 5/0037 370/333
2010/0247105	A1	9/2010	Yu
2010/0278530	A1	11/2010	Kummetz et al.
2010/0279704	A1	11/2010	Vachhani
2010/0291949	A1	11/2010	Shapira et al.
2010/0296816	A1	11/2010	Larsen
2010/0299173	A1	11/2010	Zampiello et al.
2010/0311372	A1	12/2010	Bouyaud et al.
2011/0069657	A1	3/2011	Gholmieh et al.
2011/0103309	A1	5/2011	Wang et al.
2011/0135013	A1	6/2011	Wegener
2011/0135308	A1	6/2011	Tarlazzi et al.
2011/0223958	A1	9/2011	Chen et al.
2011/0241425	A1	10/2011	Hunter, Jr. et al.
2011/0249708	A1	10/2011	Maca
2011/0281579	A1	11/2011	Kummetz
2012/0039254	A1	2/2012	Stapleton et al.
2012/0057572	A1	3/2012	Evans et al.
2012/0127938	A1	5/2012	Lv et al.
2012/0281565	A1	11/2012	Sauer
2013/0272202	A1	10/2013	Stapleton et al.
2014/0126914	A1	5/2014	Berlin et al.
2014/0286247	A1	9/2014	Lemson et al.
2014/0313884	A1	10/2014	Stapleton et al.
2016/0014782	A1	1/2016	Stapleton et al.
2016/0080082	A1	3/2016	Lemson et al.
2017/0214420	A1	7/2017	Phillips et al.

FOREIGN PATENT DOCUMENTS

CN	101453699	A	6/2009
CN	101453799	A	6/2009
CN	101521893	A	9/2009
CN	201307942	Y	9/2009
CN	101621806	A	1/2010
CN	103201958	A	7/2013
EP	0368673	A1	5/1990
EP	0642243	A1	3/1995
EP	1924109	A1	5/2008
EP	2606576		6/2013
JP	1992-207532	A	7/1992
JP	1993-136724	A	1/1993
JP	2002-158615	A	5/2002
JP	2004-147009	A2	5/2004
JP	2007-523577	A	8/2007
JP	2007-235738	A	9/2007
JP	2007-529926	A	10/2007
JP	2008-506322	A	2/2008
JP	2008-099137	A2	4/2008
JP	2008-516503	A	5/2008
JP	2008-135955	A	6/2008
JP	2009-296335	A2	12/2009
JP	2010-166531	A2	7/2010
KR	10-1996-0702978	A	5/1996
KR	10-2009-0088083	A	8/2009
WO	98/24256	A2	6/1998
WO	00/23956	A1	4/2000
WO	01/56197	A2	8/2001
WO	02/23946	A2	3/2002
WO	02/47414	A2	6/2002
WO	2008/146394	A1	12/2008
WO	2008/154077	A1	12/2008
WO	2010/087031	A1	8/2010
WO	2010133942	A1	11/2010
WO	2012/024343	A1	2/2012
WO	2012/024349	A1	2/2012

OTHER PUBLICATIONS

"Common Public Radio Interface (CPRI) Specification V1.4", dated Mar. 31, 2006, downloaded from http://www.cpri.info/spec.html on Mar. 28, 2017, 64 pages.

"Common Public Radio Interface (CPRI) Specification V2.1", dated Mar. 31, 2006, downloaded from http://www.cpri.info/spec.html on Mar. 28, 2017, 76 pages.

"Common Public Radio Interface (CPRI) Specification V3.0", dated Oct. 20, 2006, downloaded from http://www.cpri.info/spec.html on Mar. 28, 2017, 89 pages.

"Common Public Radio Interface (CPRI) Specification V4.0", dated Jun. 30, 2008, downloaded from http://www.cpri.info/spec.html on Mar. 28, 2017, 96 pages.

"Common Public Radio Interface (CPRI) Specification V4.1", dated Feb. 18, 2009, downloaded from http://www.cpri.info/spec.html on Mar. 28, 2017, 109 pages.

Grundmann et al., "An empriacal comparison of a distrubuted antenna microcell system versus a single antennal microcell system for indooor spread spectrum communications at 1.8 GHz", ICUPC Conference, 1993, 5 pages.

Zhaohui et al., "A rake type receiver structure for CDMA mobile communication systems using antenna arrays", IEEE, 1996, pp. 528-530.

"Mastering the Mix in Signal Processing", Mixed-Signal Design Seminar, 1991, Analog Devices, Inc., 3 pages.

Grace, Martin K., "Synchronous quantized subcarrier multiplexing for transport of video, voice, and data", IEEE Journal on Selected Areas in Communications, Sep. 1990, vol. 8, No. 7., pp. 1351-1358.

Wala, Philip M., "A new microcell architecture using digital optical transport", 1993, IEEE, pp. 585-588.

Crofut, Walter, "Remote monitoring of wirelss base stations Jun. 1, 1998"; http://urgentcomm.com/print/mag/remote-monitoring-wireless-base-stations, downloded on Mar. 13, 2017, 4 pages.

Cyr et al., "The digital age is here, Digital radio frequency transport enhances cellular network performance", Jul. 4, 1993, Telephony, pp. 20-24.

CityCell 824, "Remote Site Manual, How to use it, Preliminary Version"; Feb. 1, 1993, 237 pages.

Cheun, Kyungwhoon, "Performance of direct-sequence spread-spectrum rake receives with randon spreading sequences", IEEE Transactions on Communication, Sep. 9, 1997, vol. 45, No. 9, pp. 1130-1143.

Brunner et al., "On space-time rake receiver structure for WCDMA", 1999, IEEE, pp. 1546-1551.

Graf, Rudolf F., "Modern Dictionary of Electronics, 7th Ed.", 1999, Newnes publishing, 9 pages.

Office Action for Japanese Patent Application No. 2016-139702, dated Apr. 20, 2017, 7 pages.

U.S. Appl. No. 15/205,820, filed Jul. 8, 2016 by Lemson et al. (Unpublished).

Notification of Transmittal of the International Search Report and the Written Opinion of the International Searching Authority, or the Declaration and International Search Report and Written Opinion of the International Searching Authority for International Application No. PCT/US2011/048004 dated Jan. 5, 2012, 6 pages.

Notification of Transmittal of the International Search Report and the Written Opinion of the International Searching Authority, or the Declaration and International Search Report and Written Opinion of the International Searching Authority for International Application No. PCT/US2011/047995 dated Dec. 22, 2011, 7 pages.

T-Mobile v. Dali Wireless Inc.
T-Mobile Ex. 1038

(56) **References Cited**

OTHER PUBLICATIONS

International Search Report and Written Opinion of the International Searching Authority for International Application No. PCT/US2011/047999 dated Dec. 19, 2011, 7 pages.
Non-Final Office Action for U.S. Appl. No. 13/211,247 dated Oct. 10, 2012, 6 pages.
Notice of Allowance for U.S. Appl. No. 13/211,247 dated Mar. 13, 2013, 11 pages.
Non-Final Office Action for U.S. Appl. No. 13/211,247 dated Jul. 22, 2013, 11 pages.
Final Office Action for U.S. Appl. No. 13/211,247 dated Nov. 26, 2013, 13 pages.
Notice of Allowance for U.S. Appl. No. 13/211,247 dated Mar. 11, 2014, 10 pages.
First Office Action for Chinese Patent Application No. 20118005066.6 dated Aug. 4, 2014.
Non-Final Office Action for U.S. Appl. No. 13/913,207 dated Nov. 20, 2014, 22 pages.
Non-Final Office Action for U.S. Appl. No. 14/260,145 dated Jan. 27, 2015, 10 pages.
Second Office Action for Chinese Patent Application No. 20118005066.6 dated Apr. 13, 2015, 7 pages.
Final Office Action for U.S. Appl. No. 13/913,207 dated Apr. 15, 2015, 15 pages.
Notice of Allowance dated May 8, 2015 for U.S. Appl. No. 14/260,145 13 pages.
Notice of Allowance dated May 26, 2015 for U.S. Appl. No. 13/913,207, 11 pages.
Third Office Action for Chinese Patent Application No. 20118005066.6 dated Jan. 4, 2015, 6 pages.
Notice of Allowance for U.S. Appl. No. 14/800,515, dated May 20, 2016, 13 pages.
Partial Supplementary European Search Report for European Application No. 11818695.6 dated Aug. 31, 2017, 15 pages.
"Introduction to Receivers", downloded Jun. 15, 2017 from http://www.ece.ucsb.edu/~long/ece145a/Introduction_to_Receivers.pdf, 28 pages.
"Standardizing Digital IF Data Transfer with VITA 49", RTC Magazine, downloaded Jun. 15, 2017 from http://rtcmagazine.com/articles/view/100460, 5 pages.
Lan et al., "GSM Co-Channel and Adjacent Channel Interference Analysis and Optimization", Dec. 2011, vol. 16, No. 6, Tsinghua Science and Technology, ISSN 1007-0214 Apr. 2012, pp. 583-588.
Extended European Search Report for European Application No. 11818697.2 dated Aug. 17, 2017, 7 pages.
Office Action for Japanese Application No. 2016-174930 dated Aug. 2, 2017, 4 pages.
Office Action for Chinese Patent Application No. 201510531485.1 dated Nov. 2, 2017, 6 pages.
Notice of Allowance for Korean Patent Application No. 10-2015-7024302, dated Nov. 10, 2017, 5 pages.
Petition for Inter Partes Review of U.S. Pat. No. 9,531,473 Under 35 U.S.C. §§ 311-319 and 37 C.F.R. § 41.100 ET SEQ., filed Feb. 2, 2018, 95 pages.
Acampora, Anthony, "Declaration of Dr. Anthony Acampora" in support of Inter Partes Review of U.S. Pat. No. 9,531,473, Feb. 2, 2018, 190 pages.
"Comprehensive Dictionary of Electrical Engineering",1999, CRC Press & IEEE Press, 4 pages.
"Computer Dictionary. The Comprehensive Standard for Business, School, Library and Home", 1991, Microsoft Press, ISBN 1-55615-231-0, 6 pages.
"Wiley Electrical and Electronics Engineering Dictionary", 2004, Wiley & Sons, Inc., 7 pages.
"McGraw-Hill Dictionary of Scientific and Technical Terms", (5th ed.), 1994, McGraw-Hill, Inc., ISBN 0-07-042333-4, 6 pages.
Excerpts from Patent Owner's Invalidity Contentions regarding U.S. Pat. No. 7,639,982 served in related matter *CommScope Technologies LLC* v. *Dali Wireless, Inc.*, Case No. 3:16-cv-00477-B (N.D. Tex.) ("Patent Owner's Invalidity Contentions Ex. C"), 410 pages. Feb. 2, 2018.
Horak, Ray, "Telecommunications and Data Communications Handbook", 2007, Wiley & Sons, Inc., 55 pages.
Spurgeon, Charles E., "Ethernet, The Definitive Guide", 2000, O'reilly & Assoc., Inc., 112 pages.
"Dali Wireless, Inc.'s claim construction brief", in: *CommScope Technologies LLC* v. *Dali Wireless, Inc.*, Case No. 3:16-cv-00477-B (N.D. Tex.), Jun. 30, 2017, 36 pages.
"Dali Wireless, Inc.'s responsive claim construction brief", in: *CommScope Technologies LLC* v. *Dali Wireless, Inc.*, Case No. 3:16-cv-00477-B (N.D. Tex.), Aug. 18, 2017, 30 pages.
Office Action for Chinese Patent Application No. 201610011597.9, dated Mar. 29, 2018, 5 pages.

* cited by examiner

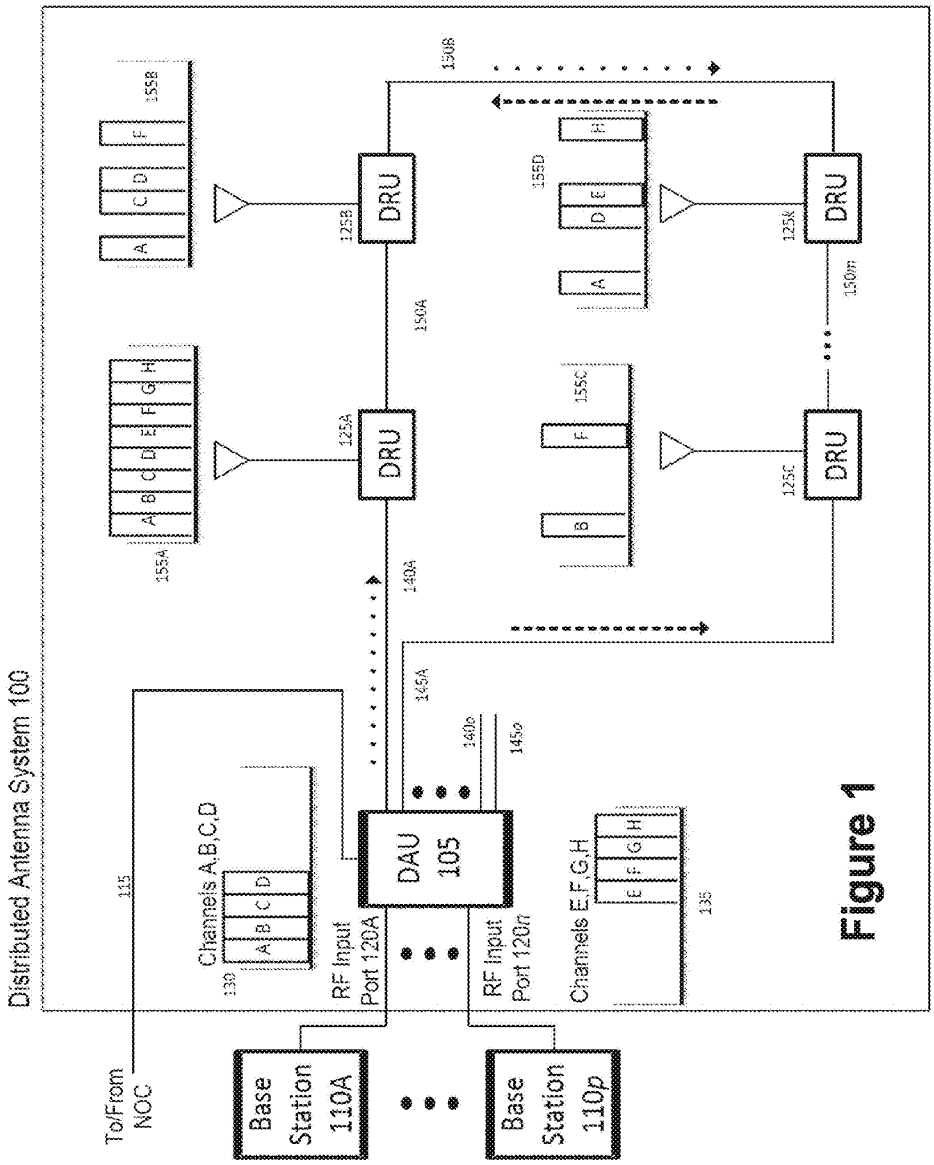

Figure 1

T-Mobile v. Dali Wireless Inc.
T-Mobile Ex. 1038

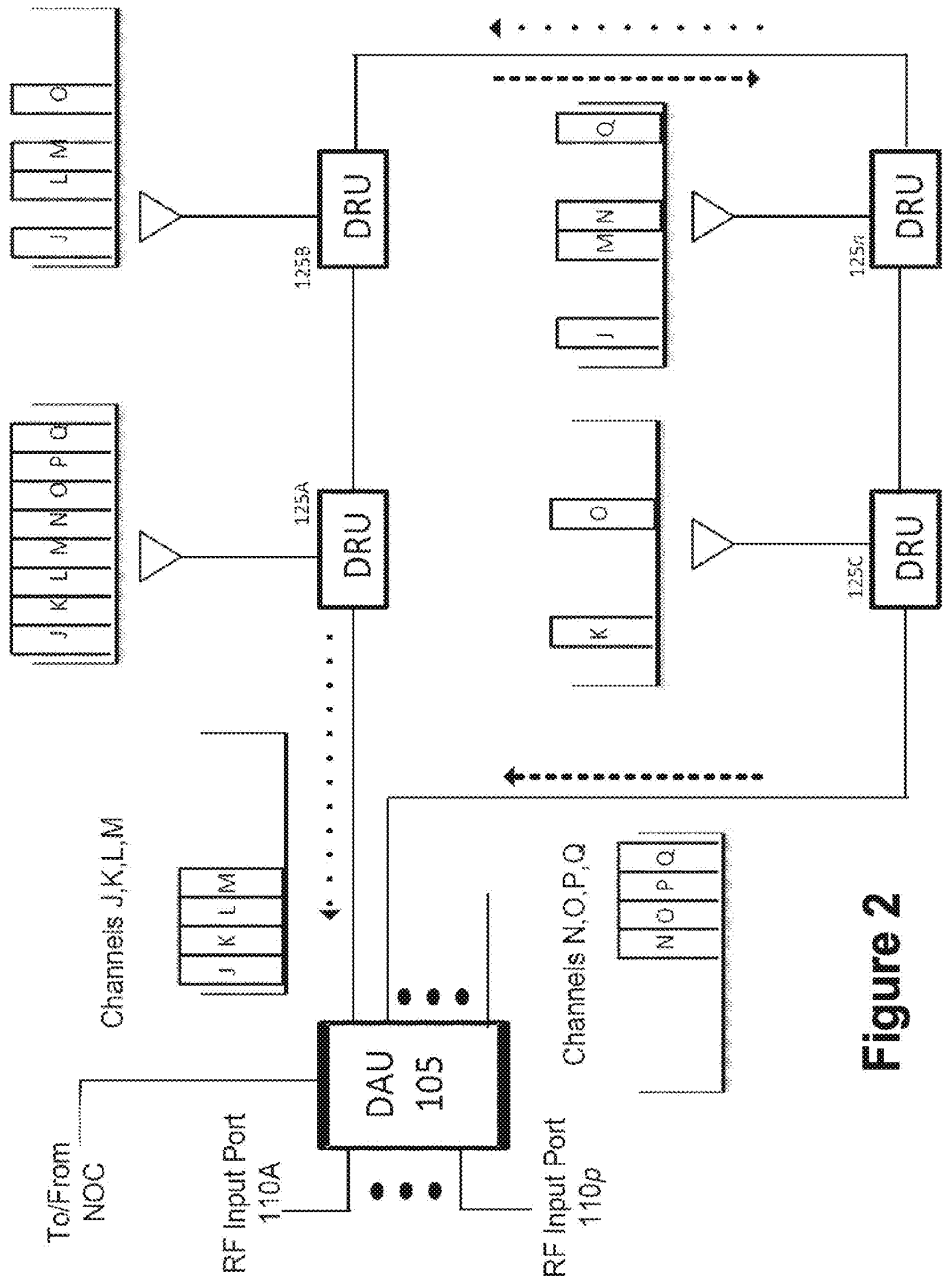

Figure 2

T-Mobile v. Dali Wireless Inc.
T-Mobile Ex. 1038

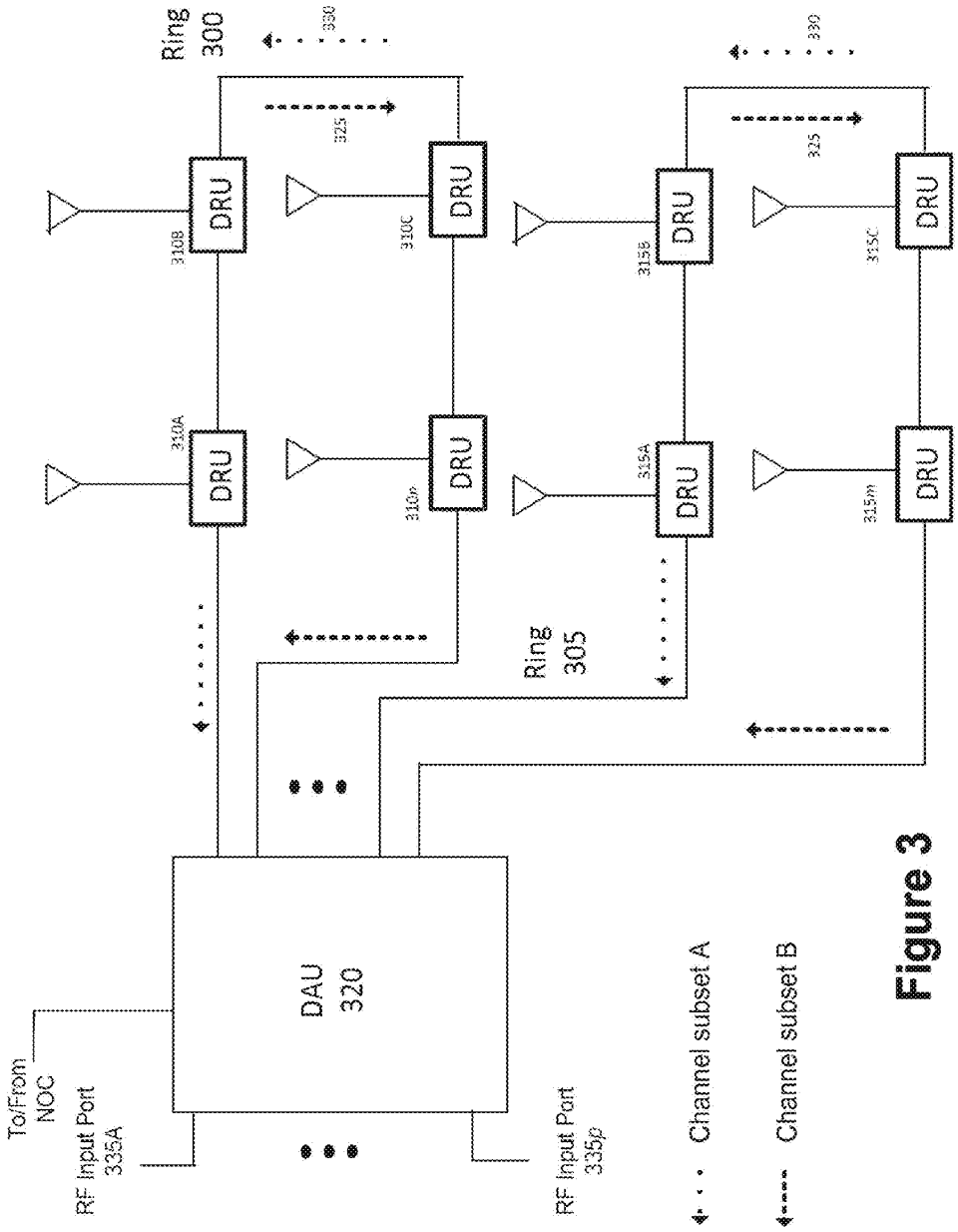

Figure 3

T-Mobile v. Dali Wireless Inc.
T-Mobile Ex. 1038

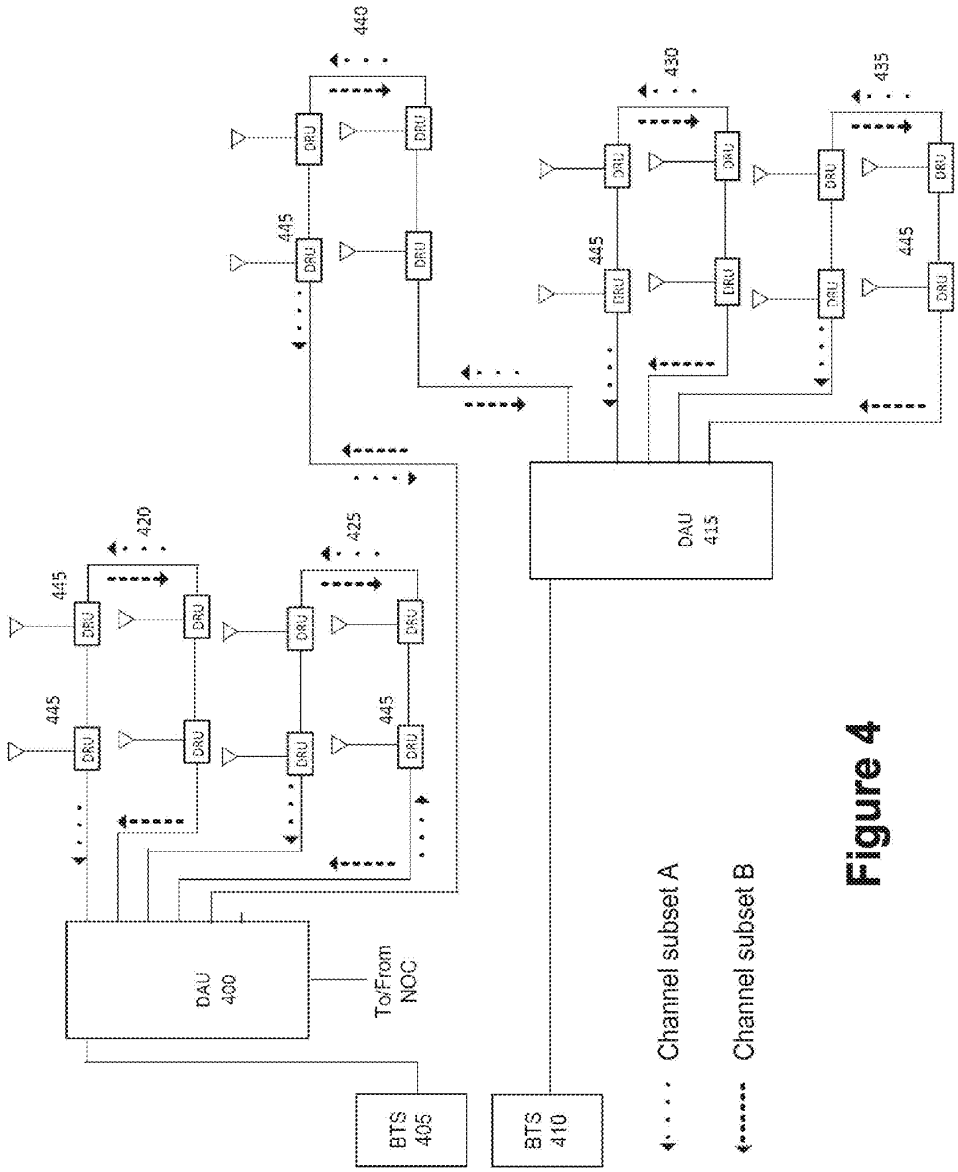

Figure 4

T-Mobile v. Dali Wireless Inc.
T-Mobile Ex. 1038

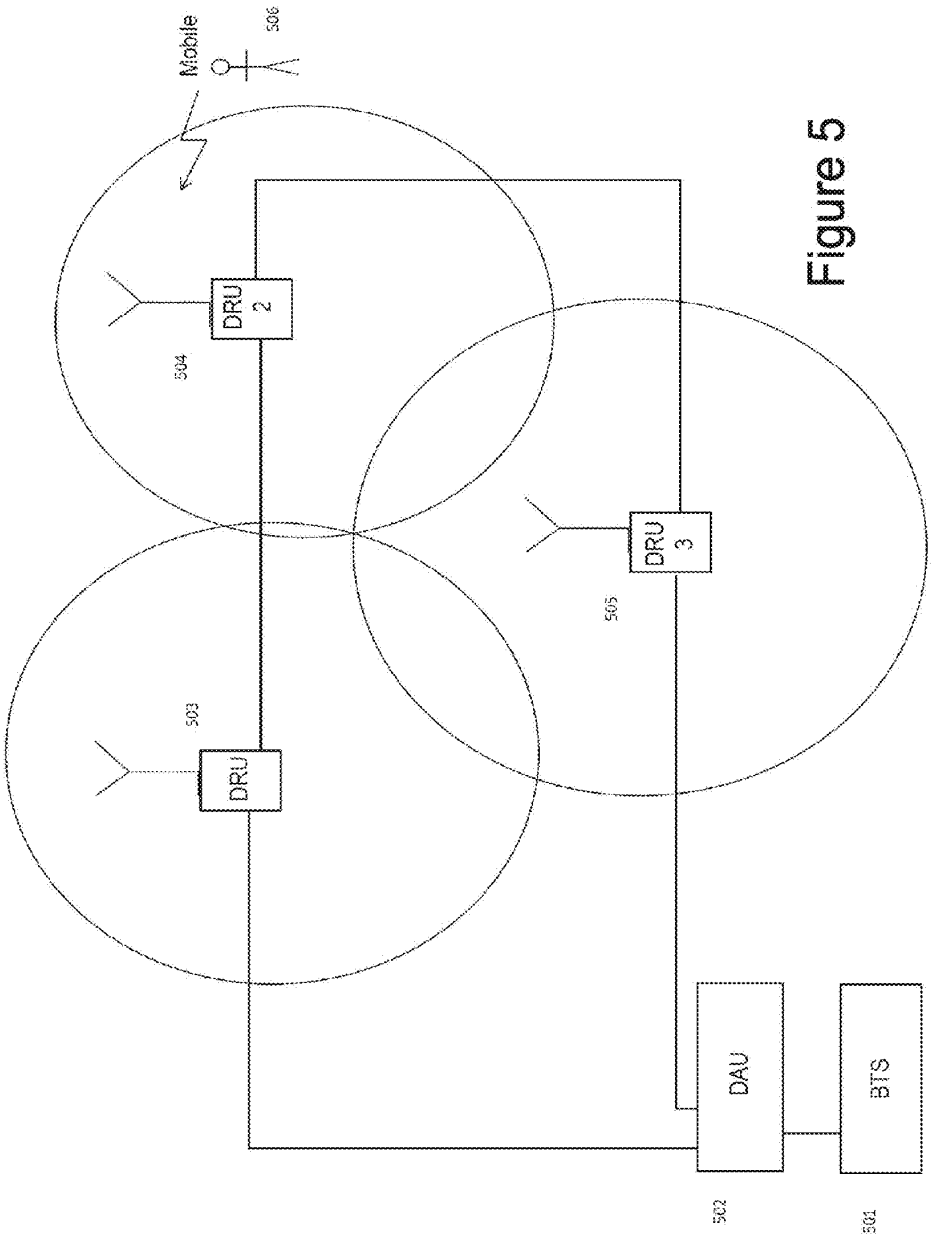

Figure 5

T-Mobile v. Dali Wireless Inc.
T-Mobile Ex. 1038

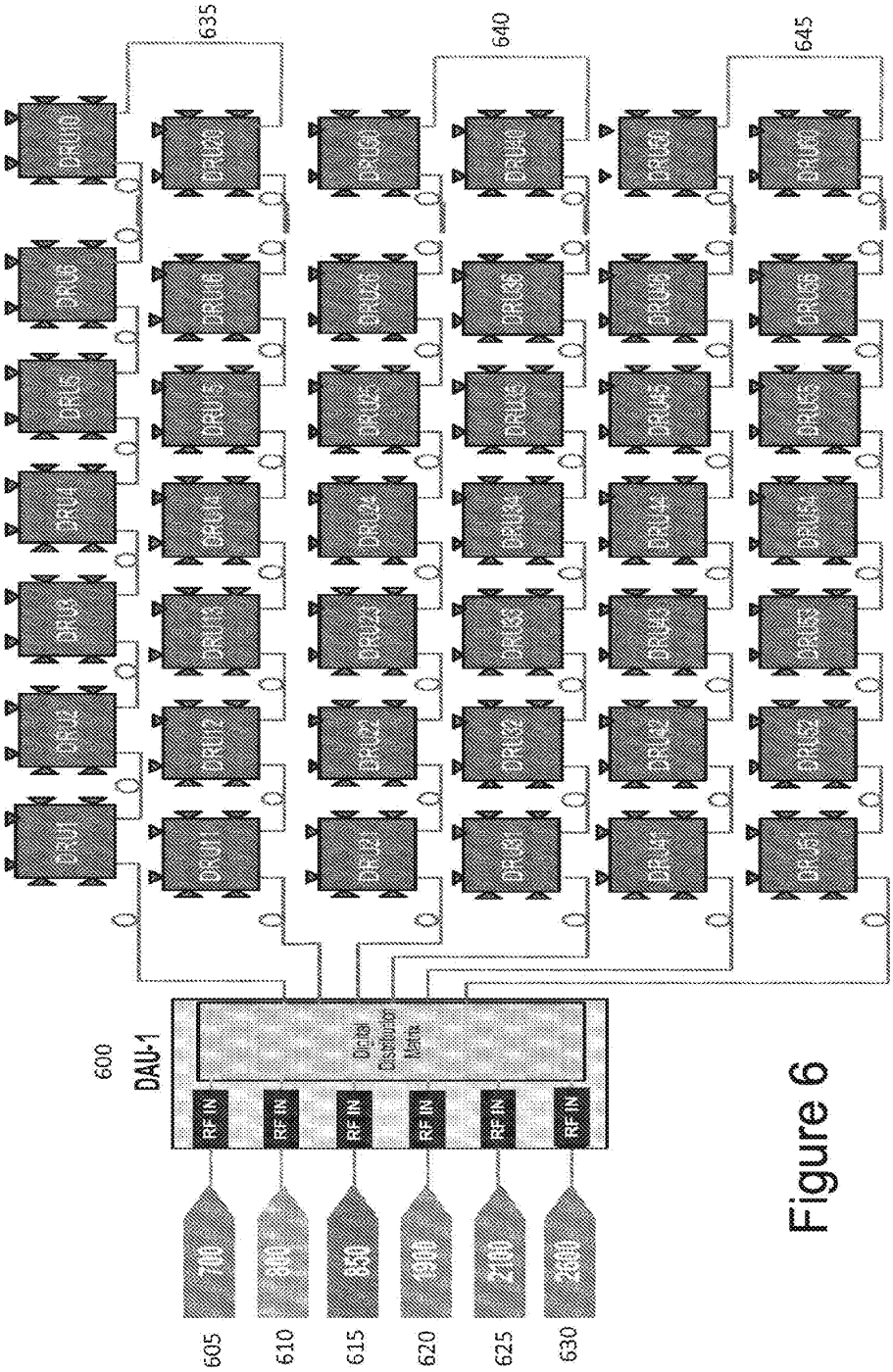
600
DAU-1
Digital Distribution Matrix
RF IN
RF IN
RF IN
RF IN
RF IN
RF IN
700
800
900
1000
2100
2200
605
610
615
620
625
630
635
640
645

Figure 6

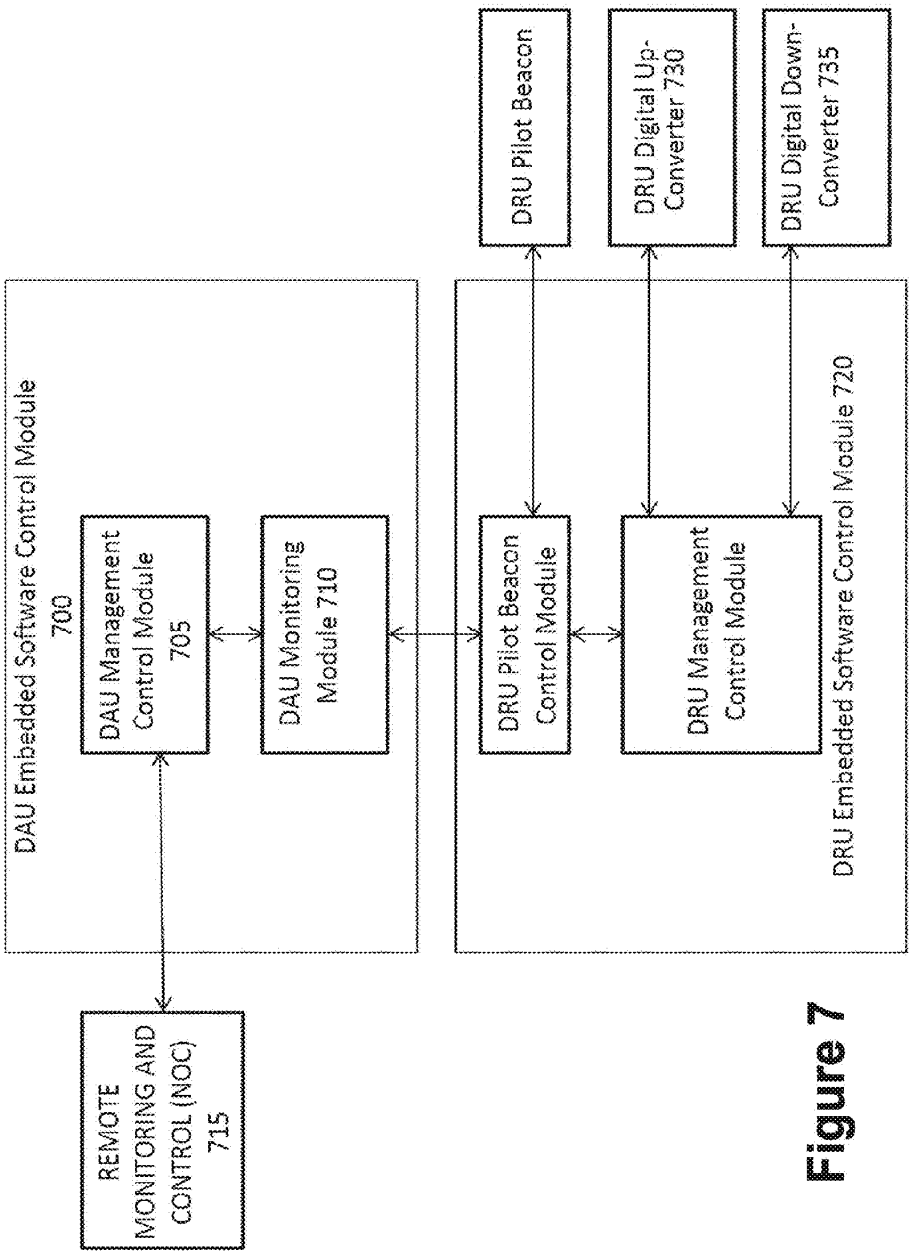
DAU Embedded Software Control Module
700
DAU Management Control Module
705
DAU Monitoring Module 710
REMOTE MONITORING AND CONTROL (NOC)
715
DRU Pilot Beacon
DRU Digital Up-Converter 730
DRU Digital Down-Converter 735
DRU Pilot Beacon Control Module
DRU Management Control Module
DRU Embedded Software Control Module 720

Figure 7

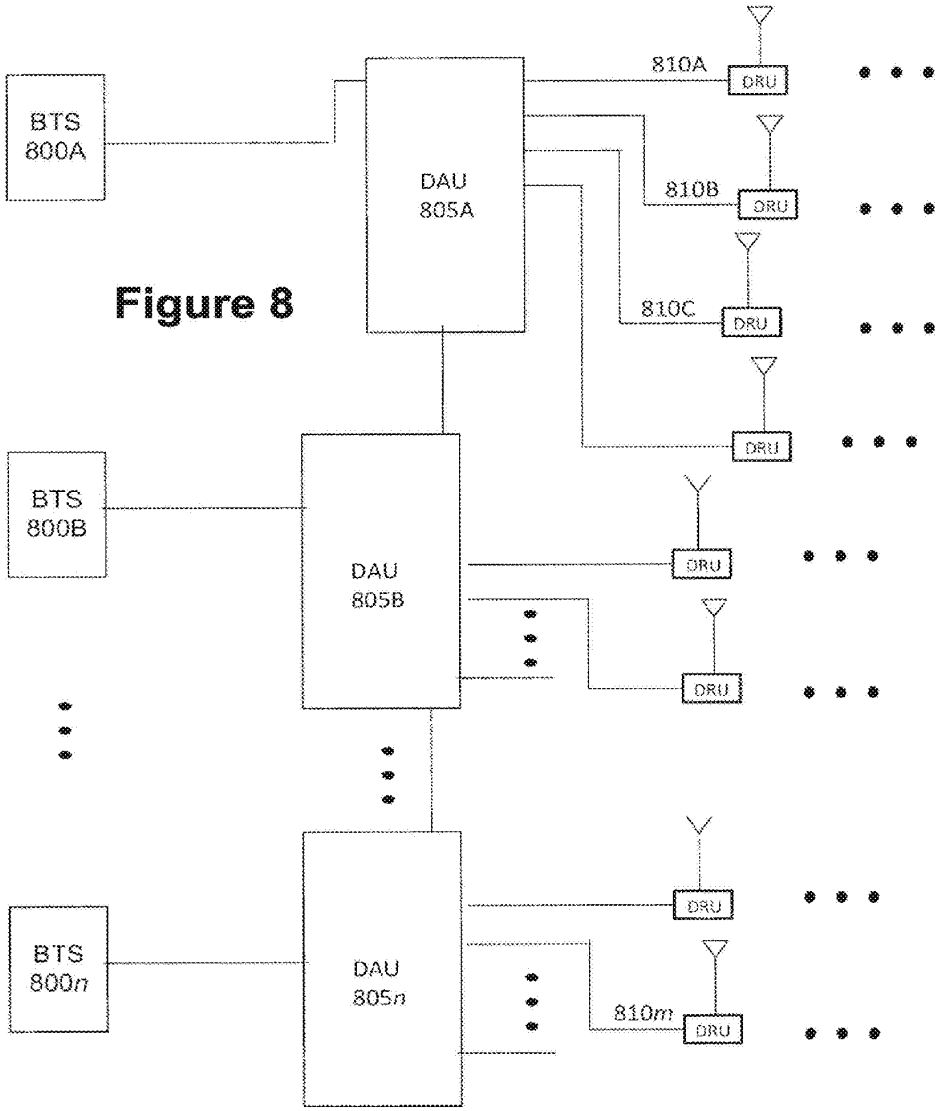

Figure 8

T-Mobile v. Dali Wireless Inc.
T-Mobile Ex. 1038

DISTRIBUTED ANTENNA SYSTEM

CROSS-REFERENCES TO RELATED APPLICATIONS

The present application is a continuation of U.S. patent application Ser. No. 14/800,515 filed Jul. 15, 2015; which is a continuation of U.S. patent application Ser. No. 14/260,145, filed Apr. 23, 2014; which is a continuation of U.S. patent application Ser. No. 13/211,247, filed Aug. 16, 2011; which claims the benefit of U.S. Provisional Patent Application No. 61/439,940, filed Feb. 7, 2011; the disclosures of which are hereby incorporated by reference for all purposes.

FIELD OF THE INVENTION

The present invention generally relates to wireless communication systems employing Distributed Antenna Systems (DAS) as part of a distributed wireless network. More specifically, the present invention relates to a DAS utilizing one or more remotely monitored and controlled digital access units configured to assign particular packet transmissions to selected ones of a plurality of remote units, which can in some embodiments be configured in a daisy-chained rings.

BACKGROUND OF THE INVENTION

Wireless and mobile network operators face the continuing challenge of building networks that effectively manage high data-traffic growth rates. Mobility and an increased level of multimedia content for end users requires end-to-end network adaptations that support both new services and the increased demand for broadband and flat-rate Internet access. One of the most difficult challenges faced by network operators is maximizing the capacity of their DAS networks while ensuring cost-effective DAS deployments and at the same time providing a very high degree of DAS remote unit availability.

In order to provide DAS network capacity which is high enough to meet short-term needs of network subscribers in specific locations yet also avoid costly and inefficient deployment of radio resources, DAS network planners prefer to employ DAS architectures and solutions which provide a high degree of dynamic flexibility. Therefore, it would be advantageous for wireless network operators to employ a DAS solution which has a high degree of flexibility to implement dynamic rearrangements based on ever-changing network conditions and subscriber needs. Also, the more future-proof a DAS deployment can be, generally the lower its life cycle cost.

DAS network planners and system integrators employ a wide range of innovative approaches for helping to ensure that a particular DAS deployment is as cost-effective as possible. The types of costs considered by network planners and integrators include DAS deployment or DAS installation cost, as well as operational costs including maintenance costs, emergency restoration costs and network re-arrangement costs. Rearrangement costs are particularly significant for indoor DAS applications, due to frequent changes in building use and facility needs changes. Therefore, it would be advantageous to employ DAS systems and methods which are based on as few DAS transport facilities as possible to minimize installation and/or lease costs and have self-healing capabilities to avoid the need for costly emergency restoration services.

In order to obtain a high degree of DAS remote unit availability, two primary conditions must be satisfied. First, the DAS remote unit itself must be inherently reliable. Second, the transport media e.g., optical fiber, must be very reliable. It is well known that electronic and/or optical connections themselves are a significant root cause of failure or reduced availability in a DAS network. Companies who maintain outdoor DAS networks have reported that a failure of outside plant optical fiber facilities is not as rare as would be desirable. Therefore, it would be advantageous to employ systems and methods which offer higher redundancy and/or self-healing features in the event of failure of a transport media connection.

SUMMARY OF THE INVENTION

The present invention substantially achieves the advantages and benefits discussed above and overcomes the limitations of the prior art discussed above by providing a distributed antenna system responsive to one or more base stations and having at least one but in some embodiments a plurality of Digital Access Units ("DAU's"), each operating to control the packet traffic of an associated plurality of Digital Remote Units ("DRU's"). In embodiments employing multiple DAU's, the DAU's can be daisy-chained linearly or in a ring configuration. Likewise, depending upon the implementation, the DRU's associated with a given DAU can be configured in either a linear or ring Daisy chain configuration.

The data received from the base stations is down-converted, digitized and converted to baseband with the DAU. The data streams are then I/Q mapped and framed and independently serialized, such that multiple data streams are available in parallel from the DAU. In at least some embodiments, the DAU communicates with the associated DRU's via an optical transport arrangement. It will be appreciated by those skilled in the art that, using the present invention, it is possible to configure a distributed antenna system having n base stations, each providing m RF outputs for transmission by one or more associated DAU's to o DRU's, where the only limits are imposed by the technical performance specifications of the particular DAS, such as delay.

By the use of a ring configuration for connecting, in at least some embodiments, the DRU's and/or the DAU's, fault tolerance is built into the system, with resulting high availability. In single DAU embodiments, each DRU is accessible through two paths, and therefore remains available even in the event of a line break. In multi-DAU embodiments, where the DAU's are linearly daisy-chained, each DRU is accessible from multiple DRU's such that even some DAU failures will not prevent system operation. In embodiments employing a ring connection for the DAU's, multiple paths exist to each DAU, and thus provide an additional level of fault tolerance as well as dynamic load balancing and resource management as discussed in greater detail hereinafter.

Thus, the configuration of the advanced system architecture of the present invention provides a high degree of flexibility to manage, control, enhance and facilitate the radio resource efficiency, usage, availability, and overall performance of the distributed wireless network. The present invention enables specialized applications and enhancements including Flexible Simulcast, automatic traffic load-balancing, network and radio resource optimization, network calibration, autonomous/assisted commissioning, carrier pooling, automatic frequency selection, radio frequency carrier placement, traffic monitoring, traffic tagging,

and indoor location determination using pilot beacons. The present invention can also serve multiple operators, multi-mode radios (modulation-independent) and multi-frequency bands per operator to increase the efficiency and traffic capacity of the operators' wireless networks.

Further the present invention provides a high degree of dynamic flexibility, supports dynamic re-arrangements, and provides a low life cycle cost. This advanced system architecture enables deployment of DAS networks using fewer DAS transport facilities to reduce costs, while providing self-healing features. The present invention also offers redundancy and enhanced system availability.

It is an object of the present invention to provide Flexible Simulcast capabilities, as disclosed in U.S. Provisional Application Ser. No. 61/382,836, entitled "Remotely Reconfigurable Distributed Antenna System and Methods," filed Sep. 14, 2010, incorporated herein by reference, in a high-availability ring configuration using, for example, optical fiber transport. As discussed above, the ring configuration insures that a break in any optical fiber cable will not shut down the daisy-chained network, because the downlink and uplink signals can be rerouted around the cable break to the respective DRUs.

It is a further object of the present invention to balance the bidirectional data rate on the optical fibers so as to increase the maximum achievable data rate during operation on the ring network of DRUs.

It is a further object of the present invention to provide higher transport network capacity in the event the data transport is asymmetrical between the downlink and uplink, as is typically the case for mobile broadband networks.

It is a further object of the present invention to provide an adaptive and automatic control for optimizing the transport media capacity on the ring.

It is a further object of the present invention to provide a method of summing co-channel users' uplink signals in the DRU daisy chain.

Applications of the present invention are suitable to be employed with distributed base stations, distributed antenna systems, distributed repeaters, mobile equipment and wireless terminals, portable wireless devices, and other wireless communication systems such as microwave and satellite communications. The present invention is also field upgradable through a link such as an Ethernet connection to a remote computing center.

Appendix I is a glossary of terms used herein, including acronyms.

BRIEF DESCRIPTION OF THE DRAWINGS

Further objects and advantages of the present invention can be more fully understood from the following detailed description taken in conjunction with the accompanying drawings in which:

FIG. **1** is a block diagram according to one embodiment of the invention showing the basic structure and an example of a unidirectional, channelized downlink transport, one ring scenario based on having one DAU and four DRUs.

FIG. **2** is a block diagram in accordance with an embodiment of the invention showing the basic structure and an example of a unidirectional, channelized uplink transport, one ring scenario based on having one DAU and four DRUs.

FIG. **3** is a block diagram in accordance with an embodiment of the invention showing the basic structure and an example of a unidirectional, channelized uplink transport, two ring scenario based on having one DAU and eight DRUs.

FIG. **4** is a block diagram in accordance with an embodiment of the invention showing the basic structure and an example of a unidirectional channelized uplink or downlink transport. This example of a five ring scenario comprises two DAUs and twenty DRUs. FIG. **4** provides an example of a daisy chain ring network.

FIG. **5** illustrates an embodiment of a cellular network system employing multiple DRUs according to the present invention.

FIG. **6** illustrates an embodiment of a multi-band system employing six different services operating in different frequency channels with multiple DRUs according to the present invention.

FIG. **7** illustrates in block diagram form the interaction between the DAU embedded software control module and the DRU embedded software control module.

FIG. **8** illustrates in block diagram form an embodiment of a DAS according to an aspect of the invention, including daisy-chained DAUs.

DETAILED DESCRIPTION OF THE INVENTION

The present invention is a novel Reconfigurable Distributed Antenna System that provides a high degree of flexibility to manage, control, re-configure, enhance and facilitate the radio resource efficiency, usage and overall performance of the distributed wireless network. FIG. **1** illustrates an embodiment of the Distributed Antenna System **100** that provides an example of a unidirectional, channelized downlink transport in accordance with the present invention. In FIGS. **1-4**, a dotted line denotes a distinct subset of uplink and downlink channels identified as "A." A dashed line denotes a distinct subset of uplink and downlink channels identified as "B." The subset of uplink and downlink channels in A do not include those of B and vice versa. The system employs a Digital Access Unit functionality **105** (hereinafter "DAU"). The DAU **105** serves as an interface between associated base stations (BTS) **110**A-B and a plurality of digital remote units (DRU) **125**A-n, although only four DRU's are shown in FIG. **1**. In the present description, "DRU" will be used interchangeably with Remote Radio Head Unit, or "RRU", because of the similarity of the functions discussed herein, although those skilled in the art will recognize that a DRU communicates with a DAU, whereas an RRU communicates with a base station. In addition, those skilled in the art will recognize that a DAU is monitored and controlled by a remote network operations center ("NOC"), as indicated at bidirectional link **115** in FIG. **1**. Such links are typically Ethernet connections or external modems, but can be any form of link suitable for remote monitoring and control. The NOC has the capability to remotely configure the DAU parameter settings which in turn configures the DRU's parameter settings. The NOC can request information from the DAUs. The DAUs can subsequently request information from the DRUs. The information requested includes but is not limited to uplink power, downlink power, optical error rate, gain settings, active carriers, etc.

For the downlink (DL) path, RF input signals **120**A through **120***n* are received at the DAU **105** from one or more base station units (BTS) indicated at **110**A through **110***p*. The RF input signals are separately down-converted, digitized, and converted to baseband (using a Digital Down-Converter) by the DAU. Data streams are then I/Q mapped and framed and specific parallel data streams are then independently serialized and translated to optical signals

T-Mobile v. Dali Wireless Inc.
T-Mobile Ex. 1038

using pluggable SFP modules, again by the DAU **105**. The independently serialized, parallel data streams are then delivered to different DRU's **125**A-**125***k*, typically over optical fiber cable arranged, in at least some embodiments, in a ring configuration indicated at connection pairs **140**A-**145**A, or, in other embodiments, a daisy chain configuration. In addition, each DAU can support a plurality of rings with associated DRU's, where the additional rings are indicated by fiber optic pairs up through **140***o*-**145***o*. . It will be appreciated by those skilled in the art that the number of RF inputs, DAU's and DRU's and rings is limited only by network performance factors, such as delay. In addition, as discussed in connection with FIG. **4** herein, the DAS can be further extended by using a ring or daisy-chain of DAU's, each of which supports an arrangement of DRU's and rings as shown in FIG. **1**.

One function of the DAU **105** is to determine the direction in which downlinked channels are propagated around the ring. As just one example, the embodiment shown in FIG. **1** is configured to have downlink channels A, B, C and D propagate in a first direction, for example clockwise, and channels E, F, G, and H propagate in the counter direction, although it will be understood that the number of channels propagating in each direction need not be equal, nor adjacent, nor sequential. Likewise, the number of channels received at each DRU is assigned by the DAU and need not be equal, adjacent or sequential, but instead will typically be any configuration that optimizes network utilization.

Referring next to FIG. **2**, an embodiment of an uplink (UL) path in accordance with the invention can be better appreciated. Channels received at the antenna associated with each DRU are converted into optical signals by each DRU **125**A-**125***k*. Optical signals received from the DRU's are de-serialized and de-framed by the DAU **105**, and are also up-converted digitally using a Digital Up-Converter implemented within the DAU **105**. Each data stream is then independently converted to the analog domain and up-converted to the appropriate RF frequency band, still within the DAU **105** in the illustrated implementation, although this functionality can be separate. The RF signals are then delivered to the appropriate one of a plurality of BTS' **110**A-**110***p*. As with the arrangement shown in FIG. **1**, the direction of propagation of each channel is controlled by the DAU, with some channels propagating in a clockwise direction and others in a counterclockwise direction. Also as discussed in connection with FIG. **1**, while adjacent channels are shown as propagating in the same direction in FIG. **2**, this is not required and any channel can be selected to propagate in either direction.

Referring again to FIG. **1**, it will be appreciated by those skilled in the art that, in some implementations of a DAS, more than one carrier can exist in each channel, and, as such, a DRU may receive a channel comprising a signal containing two or more carriers, or a wireless operator may have more than one RF carrier per channel allocated to a single base station. This is referred to as a "composite signal". The manner in which a composite downlink signal is managed by the present invention can be better understood with reference to FIG. **1**. In such instances, the DAU will receive a composite downlink input signal **130** from, e.g., a first base station **110**A belonging to one wireless operator, enters the DAU **105** at the RF input port **120**A. Composite signal **130** comprises carriers A-D. A second composite downlink input signal from e.g., a pth base station **110***p* belonging to the same wireless operator enters DAM at the DAU**1** RF input port **120***n*. Composite signal **135** comprises carriers E-H. The functionality of the DAU **105**, and DRU's **125**A-**125***k*, respectively, are explained in detail in U.S. Provisional Application Ser. No. 61/374,593, entitled "Neutral Host Architecture for a Distributed Antenna System," filed Aug. 17, 2010, the disclosure of which is hereby incorporated by reference in its entirety for all purposes.

One optical output of DAU **105** is fed to DRU **125**A, via bidirectional optical cable **140**A. A second optical output of DAU **105** is fed via bidirectional optical cable **145**A to DRU**3**. Similarly, bidirectional optical cables **150**, **155** and **160** connect DRU's **125**A-*n* in a ring configuration, such that DRU **125**A connects to DRU **125**B via cable **150**A, DRU **125**B connects to DRU **125***n* via cable **15013**, and DRU **125***k* connects to DRU **125**C, or the kth-1 DRU, via cable **150***m*. This connection facilitates networking of DAU **105**, which means that all of Carriers A-H are available within DAU **105** to transport data to DRU's **125**A-*k* depending on software settings within the networked DAU system. Depending upon the embodiment, the software settings within DRU **125**A are configured either manually or automatically, such that carriers A-H are present in the downlink output signal **155**A at the antenna port of DRU **125**A. The presence of all eight carriers means that DRU **125**A is potentially able to access the full capacity of both base stations feeding DAU **105**. A possible application for DRU **125**A is a cafeteria in an enterprise building during the lunch hour where a large number of wireless subscribers are gathered.

DRU **125**B is fed by a second optical port of DRU **125**A via bidirectional optical cable **150**A. The optical cable **150**A performs the function of daisy chaining DRU **125**A with DRU **125**B. As with DRU **125**A, the software settings within DRU **125**B are configured either manually or automatically such that Carriers A, C, D and F are present in downlink output signal **155**E at the antenna port of DRU **125**B. The capacity of DRU **125**B is set to a much lower value than DRU **125**A by virtue of its specific channel settings as controlled by DAU **105**. The individual Digital Remote Units have integrated frequency selective DUCs and DDCs with gain control for each carrier. The DAU's can remotely turn on and off the individual carriers via the gain control parameters.

In a similar manner as described previously for DRU **125**A, the software settings within DRU **125**C are configured either manually or automatically such that Carriers B and F are present in downlink output signal **155**C at the antenna port of DRU **125**C. Compared to the downlink signal **155**B at the antenna port of DRU **125**B, the capacity of DRU **125**C, which is also configured via its software settings, is much less than the capacity of DRU **125**B. DRU **125***n* is fed by the optical cable **150***m* connected to the second optical port of the nth-1 DRU, shown for simplicity in FIG. **1** as DRU **125**C. The software settings within DRU **125***n* are configured either manually or automatically such that carriers A, D, E and H are present in downlink output signal **155**D at the antenna port of DRU **125***n*. Typically, the capacity of DRU **125***n* is set to a much lower value than DRU **125**A, however, the relative capacity settings of each of DRU's **125**A-*n* can be adjusted dynamically to meet the capacity needs within the coverage zones determined by the physical positions of antennas connected to those DRU's. As noted above, the ring connection is completed by interconnecting DRU **125**B and DRU **125***n* through optical cable **150**B. The ring configuration insures that any optical cable breaks will not shut down the daisy chained network. The downlink and uplink signals will be rerouted around the cable break to the respective DRUs.

T-Mobile v. Dali Wireless Inc.
T-Mobile Ex. 1038

The present invention facilitates conversion and transport of several discrete relatively narrow RF bandwidths. This approach allows conversion of only those multiple specific relatively narrow bandwidths which carry useful or specific information. This approach also allows more efficient use of the available optical fiber transport bandwidth for neutral host applications, and allows transport of more individual operators' band segments over the optical fiber. As disclosed in U.S. Provisional Application Ser. No. 61/374593, entitled "Neutral Host Architecture for a Distributed Antenna System," filed Aug. 17, 2010 together with U.S. Provisional Application Ser. No. 61/382,836, entitled "Remotely Reconfigurable Distributed Antenna System and Methods", filed Sep. 14, 2010, both assigned to the assignee of the present invention, and also referring to FIG. **1** of the instant patent application, Digital Up Converters located within the DRU can be dynamically reconfigured as the result of commands from the NOC to transport from the DAU input to any specific DRU output any specific narrow frequency band or bands, RF carriers or RF channels which are available at the respective RF input port of either DAU. This capability is illustrated in FIG. **1** where only specific frequency bands or RF carriers appear at the output of a given DRU. More specifically, through commands received from the NOC, the FPGA's in the DAU and one or more of the associated DRU's can be reprogrammed or reconfigured to convert and transport only the desired narrow bandwidths.

A related capability of the present invention is that not only can the Digital Up Converters located within each DRU be configured to transport any specific narrow frequency band from the DAU input to any specific DRU output, but also the Digital Up Converters within each DRU can be configured to transport any specific time slot or time slots of each carrier from the DAU input to any specific DRU output. The carriers and time slots are monitored by the DAU by filtering the signals and performing power detection of the individual time slots, which information can be conveyed to the NOC as desired. Then, as with the Digital Up Converters, the Field Programmable Gate Arrays (FPGA) in the DAU or DRU can be dynamically reconfigured by commands received from the NOC in a manner analogous to software programmability. The DAU detects which carriers and corresponding time slots are active. This information is relayed to the individual DRUs via the management control and monitoring protocol software. This information is then used, as appropriate, by the DRUs for turning off and on individual carriers and their corresponding time slots.

Data transport between the Base Station and the subscribers is typically asymmetrical, whereby the downlink data rate is higher than the uplink rate. The ring network configuration of Daisy Chained DRUs can exploit this data rate asymmetry to maximize the data transport on the optical fibers **150**A-**150***m*.

The present invention balances the bidirectional data rate on the optical fibers so as to increase the maximum achievable data rate on the ring network of DRUs. The individual downlink channels are transmitted in a unidirectional sense along the ring network. Referring to FIG. **1**, downlink channels A, B, C, and D are transmitted in a clockwise sense around the ring of DRU's **125**A-k. On the other hand, downlink channels E, F, G and H are transmitted in a counterclockwise sense around the ring of DRUs. Referring to FIG. **2**, the uplink channels J, K, L and M are transmitted in a counterclockwise sense whereas uplink channels N, O, P and Q are transmitted in a clockwise sense around the ring of DRUs. If the downlink and uplink data rates were the same, there would be no advantage in the transport mechanism. However, if the data transport is asymmetrical between the downlink and uplink then a significant advantage can be gained. For example, for a factor of two difference between the downlink and uplink data rates, a 4/3 factor increase in data transport can be achieved. The larger the asymmetry between the downlink and uplink data rates, the larger will be the increase in data transport using the unidirectional channel transport mechanism around the ring.

Referring again to FIG. **1**, a further embodiment in accordance with another aspect of the present invention may be better understood. In the event that there is a significant change in asymmetry between the downlink and uplink data rates and/or if there is a change in channel complement at the BTS, the Management Control module [discussed in connection with FIG. **7** herein] which is typically comprised within each DAU is able to automatically and adaptively re-allocate data transport resources on the clockwise direction of the ring and on the counter-clockwise direction of the ring to maximize the overall transport capacity. As stated previously, the larger the degree of asymmetry between uplink and downlink data rates for a particular DAU, the higher the increase in data transport using the unidirectional channel transport mechanism around the ring. If there is more than one DAU present, in an embodiment one DAU is designated a Master DAU by the NOC, and the Management Control module located in the Master DAU makes decisions to optimize the overall transport capacity. In the event the master DAU fails, the NOC can designate another DAU as master. Alternatively, any suitable failover algorithm can be implemented.

Referring to FIG. **3**, an alternative embodiment of the present invention wherein a single DAU controls a plurality of rings, each comprising a plurality of daisy-chained DRU's, can be better understood. In FIG. **3**, two daisy-chained rings, indicated at **300** and **305**, are shown although the number of rings could be greater and is determined mainly as a matter of design preference up to limits imposed by network performance. The rings each link a plurality of DRU's **310**A-n and **315**A-m, to a single DAU **320**. The directional flow of the data transport is shown as the dashed lines **325** and dotted lines **330**. The downlink channels available from the plurality of DRU's are divided into two subsets which flow in opposite directions around the two daisy-chained rings. The uplink channels are transported in a similar fashion. The channels are grouped into the two subsets so as to maximize the data transport to and from the DRUs. The DAU in turn communicates with one or more BTS's via RF Ports **335**A p.

Heuristic algorithms may be used to allocate RF channel data in a Dual-ring DAS. For FIG. **3**, there are two fibre rings R**1**, R**2** (clockwise and counter clockwise) and a set T of $n \geq 2$ independent RF channels Ki, $1 \leq i \leq n$ (including uplink and downlink). A channel Ki requires a bandwidth of b(Ki) to transport on a fibre ring. A time-bounded algorithm exists which obtains a schedule having the optimal bandwidth allocation (i.e. the maximum aggregate bandwidth of each ring is as small as possible). A large number of advanced heuristic algorithms have been developed to solve such scheduling optimization problems. Some examples are genetic algorithm, evolutionary algorithm, greedy search, Tabu search, harmony search, simulated annealing, ant colony optimization, etc. For purposes of simplicity and clarity, a simple heuristic algorithm for two rings is described here, although the number of rings is not limited to two.

T-Mobile v. Dali Wireless Inc.
T-Mobile Ex. 1038

The algorithm begins by sorting the channels Ki decreasingly by bandwidth b(Ki). Then it schedules the channel in such a way that each channel is assigned to the ring which has the smaller aggregate bandwidth. The formal description of the algorithm follows.

Input: T=set of n independent channels Ki with required bandwidth b(Ki), $1 \le i \le n$.

Output: L_1, L_2 and D_1, D_2. Lj is the set of channels schedule on ring Rj, and D_j is the maximum aggregate bandwidth of ring Rj, $Dj=Dj=(\Sigma b(J), J \varepsilon L_j)$, $1 \le j \le 2$.

ALGORITHM (T, L, D)

Step 1 (initialize Ki and D_1, D_2) Sort Ki such that $b(Ki) \le b(Ki_{+1})$, $1 \le i \le n-1$. $D_1 \leftarrow 0$, $D_2 \leftarrow 0$.

Step 2 (Schedule a channel)

For i=1 to n, step 1 do

If $D_1 \le D_2$, then [assign Ki onto L_1, $D_1 \leftarrow D_1+b(Ki)$].

else [assign Ki onto L_2, $D_2 \leftarrow D_2+b(Ki)$].

Referring next to FIG. **4**, a still further an alternative embodiment of the present invention may be understood. The arrangement illustrated in FIG. **1** comprised downlink signals from two separate base stations belonging to the same wireless operator entering the DAU **105** at input ports **110**A and **110***p*, respectively. In the embodiment of FIG. **4**, a first composite signal enters a first DAU **400** at that DAU's RF input port from a base station **405**, and a second composite downlink input signal from, e.g., a second base station **410** belonging to a different wireless operator enters DAU **415** at that second DAU's RF input port. DAU **400** directly supports two rings **420** and **425**, DAU **415** directly supports two rings **430** and **435**, and a ring **440** is shared between DAU **400** and DAU **405**. Each of the rings comprises daisy-chained DRU's generally indicated at **445** and connected via, for example, fiber optic links, as discussed in connection with FIG. **1**. It will be noted that channels A are transported in the opposite sense as channels B. The downlink channels in subset A are transported counterclockwise around each ring, whereas the channels in subset B are transported in a clockwise sense around each ring. In this embodiment, signals belonging to both the first operator and the second operator are converted and transported to the DRU's **445** on ring **440** because DAU **400** and DAU **405** are daisy-chained through the fiber optic cable **440**. This embodiment provides an example of a neutral host wireless system, where multiple wireless operators share a common infrastructure comprised of DAU **400**, DAU **415**, and DRU's **445**. All the previously mentioned features and advantages accrue to each of the two wireless operators. It will further be appreciated that, while FIG. **4** illustrates only two DAU's linked in daisy-chain style, it is possible to daisy chain a larger plurality of DAU's, and the daisy-chained DAU's can also be configured in a ring configuration similar to the manner in which the DRU's are connected. This arranged is illustrated in FIG. **8**, below.

As disclosed in U.S. Provisional Application Ser. No. 61/374,593, entitled "Neutral Host Architecture for a Distributed Antenna System," filed Aug. 17, 2010 and again referring to FIG. **1** of the instant patent application, the Digital Up Converters present in the DRU's of the present invention can be programmed to process various signal formats and modulation types including FDMA, CDMA, TDMA, OFDMA and others. Also, the Digital Up Converters present in the respective DRUs can be programmed to operate with signals to be transmitted within various frequency bands subject to the capabilities and limitations of the system architecture disclosed in U.S. Provisional Application Ser. No. 61/374593, mentioned above. In one embodiment of the present invention where a wideband CDMA signal is present within, e.g., the bandwidth corresponding to a first carrier at the input port to DAU **105**, the transmitted signal at the antenna ports of DRU **125**A, DRU **125**C and DRUk will be a wideband CDMA signal which is virtually identical to the signal present within the bandwidth corresponding to that first carrier at the input port to DAU **105**.

As disclosed in U.S. Provisional Application Ser. No. 61/374,593, again identified above, and also referring to FIG. **1** of the instant patent application, it is to be understood that the Digital Up Converters present in the respective DRUs can be programmed to transmit any desired composite signal format to each of the respective DRU antenna ports. As an example, the Digital Up Converters present in DRU **125**A and DRU **125**B can be dynamically software-reconfigured as described previously so that the signal present at the antenna port of DRU **125**A would correspond to the spectral profile shown in FIG. **1** as **155**A and also that the signal present at the antenna port of DRU **125**B would correspond to the spectral profile shown in FIG. **1** as **155**B. The application for such a dynamic re-arrangement of DRU capacity would be e.g., if a company meeting were suddenly convened in the area of the enterprise corresponding to the coverage area of DRU **125**B.

Referring again to FIG. **2**, another embodiment of the Distributed Antenna System of the present invention can be better understood. As disclosed in the aforementioned U.S. Provisional Application Ser. No. 61/374,593, and also as shown in FIG. **2**, the optical ring transport mechanism can be implemented with regard to uplink signals. As discussed previously with regard to downlink signals and by referring to FIG. **1**, the uplink system shown in FIG. **2** is mainly comprised of DAU **105**, together with DRU's **125**A-**125***k*. In a manner similar to the downlink operation explained by referring to FIG. **1**, the operation of the uplink system shown in FIG. **2** can be understood as follows.

The Digital Down Converters present in each of DRU's **125**A-*k* are dynamically software-configured as described previously so that uplink signals of the appropriate desired signal format(s) present at the receive antenna ports of the respective DRU's **125**A-**125***k* are selected based on the desired uplink band(s) to be processed and filtered, converted and transported to the appropriate uplink output port of DAU **105**. The DAU and DRUs frame the individual data packets corresponding to their respective radio signature using the Common Public Radio Interface (CPRI) standard. Other Interface standards are applicable provided they uniquely identify data packets with respective DRUs. Header information is transmitted along with the data packet which identifies the DRU and DAU that corresponds to the individual data packet.

In one example for the embodiment shown in FIG. **2**, DRU's **125**A and **125**C are configured to receive uplink signals within the Channel K bandwidth, whereas DRU **125**C and DRU **125***n* are both configured to reject uplink signals within the Channel K bandwidth. When DRU **125**C receives a strong enough signal at its receive antenna port within the Channel K bandwidth to be properly filtered and processed, the Digital Down Converters within DRU **125**C facilitate processing and conversion. Similarly, when DRU **125**A receives a strong enough signal at its receive antenna port within the Channel K bandwidth to be properly filtered and processed, the Digital Down Converters within DRU **125**A facilitate processing and conversion. The signals from DRU **125**A and DRU **125**C are combined based on the active signal combining algorithm, and are fed to the base station connected to the uplink output port of DAU **105**. The

T-Mobile v. Dali Wireless Inc.
T-Mobile Ex. 1038

term simulcast is frequently used to describe the operation of DRU **125**A and DRU **125**C with regard to uplink and downlink signals within Channel K bandwidth. The term Flexible Simulcast refers to the fact that the present invention supports dynamic and/or manual rearrangement of which specific DRU are involved in the signal combining process for each Channel bandwidth.

Referring still to FIG. **2**, the Digital Down Converters present in DRU **125**A are configured to receive and process signals within Channel J-Q bandwidths. The Digital Down Converters present in DRU **1256** are configured to receive and process signals within Channel J, L, M and O bandwidths. The Digital Down Converters present in DRU **125**C are configured to receive and process signals within Channel K and O bandwidths. The Digital Down Converters present in DRU **125***n* are configured to receive and process signals within Channel J, M, N and Q bandwidths. The respective high-speed digital signals resulting from processing performed within each of the four DRU are routed to the DAU. As described previously, the uplink signals from the four DRUs are combined within the respective DAU corresponding to each base station.

In summary, the Reconfigurable Distributed Antenna System of the present invention described herein efficiently conserves resources and reduces costs. The reconfigurable system is adaptive or manually field-programmable, since the algorithms can be adjusted like software in the digital processor at any time.

Referring next to FIG. **5**, an alternative embodiment of the present invention may be better understood. FIG. **5** provides a daisy chain example of a distributed antenna system (DAS). Each DRU has a coverage radius that can be adjusted based on the power transmission from that particular remote unit. The DAU controls the various DRU's transmission power and can optimize the overall coverage zone. In the illustrated embodiment, DAU **502**, again under the control of a NOC (not shown), is associated with a base station **501** and in turn interfaces with three DRU's **503**, **504** and **505**. A user **506** with a mobile device is provided relatively uniform coverage throughout the area covered by the three DRU's.

Referring next to FIG. **6**, a still further alternative embodiment may be better appreciated. FIG. **6** shows an embodiment of a multi-band system illustrating one DAU supporting up to six different services operating at different frequency bands, with three optical rings of DRU's **1**-**60**. The input frequency bands **605**-**630** (here denoted as six frequency bands at 700, 800, 850, 1900, 2100 and 2600 MHz) are input into the DAU **600** from the BTS's (not shown). The DAU includes, among other functionalities discussed herein, an RF IN portion for each band, and a digital distribution matrix for distributing the frequency bands to a plurality of DRU's, indicated as DRU**1**-DRU**60**, daisy-chained along three separate rings **635**, **640** and **645** for achieving the desired coverage. The frequency bands are transported to either all or a subset of DRUs. The particular number of frequency bands, DAU's, DRU's and rings is exemplary only, and can, in practice, be any number appropriate to the performance capabilities and needs of the network.

Referring next to FIG. **7** that illustrates embedded software control modules, the software embedded in the DAU and DRU, which controls the operation of key functions of these devices, can be better understood. In particular, the DAU embedded software control module **700** comprises a DAU Management Control Module **705** and a DAU monitoring module **710**. The DAU Management Control Module **705** communicates with the NOC **715**, and also the DAU monitoring module **710**. One such key function is determining and/or setting the appropriate amount of radio resources (such as RF carriers, CDMA codes or TDMA time slots) assigned to a particular DRU or group of DRUs to meet desired capacity and throughput objectives. As noted previously, the NOC **715** monitors the DAS operation and sends commands to the DAU's for configuring various functions of the DRU's as well as the DAU, in at least some embodiments.

The DAU Monitoring module, in addition to other functions, detects which carriers and corresponding time slots are active for each DRU. The DAU Management Control module communicates with the DRU Embedded Software Control module **720** over a fiber optic link control channel via a control protocol. In an embodiment, the control protocol comprises headers together with packets of data, such that both control information and data are transmitted to the DRU's together as a message. DRU functions or features that the header would control in the DRU are typically implementation specific and can include, among other things, measuring uplink and downlink power, measuring gain of uplink and downlink, and monitoring alarms in the DRU.

In turn, the DRU Management Control module **725** within the DRU Embedded Software Control Module sets the individual parameters of all the DRU Digital Up-Converters **730** to enable or disable specific radio resources from being transmitted by a particular DRU or group of DRUs, and also sets the individual parameters of all the DRU Digital Down-Converters **735** to enable or disable specific radio resources from being transmitted by a particular DRU or group of DRUs. In addition, the DRU Embedded Software Control Module comprises a DRU Pilot Beacon Control Module **740**, which communicates with a DRU Pilot Beacon **745**.

Referring next to FIG. **8**, an embodiment of a daisy-chained configuration of DAU's is illustrated, together with a daisy-chained configuration of DRU's. In an embodiment, a plurality of base stations **800**A-**800***n* are each associated with one of DAU's **805**A-*n*. The DAU's are daisy-chained, and each DAU communicates with one or more daisy-chains **810**A-**810***m* of DRU's which may or may not be arranged in a ring configuration. It will be appreciated that the DAU's can also be configured in a ring configuration, as discussed above.

An algorithm operating within the DAU Monitoring module which detects which carriers and corresponding time slots for each carrier are active for each DRU provides information to the DAU Management Control module to help identify when, e.g., a particular downlink carrier is loaded by a percentage greater than a predetermined threshold whose value is communicated to the DAU Management Control module by the DAU's Remote Monitoring and Control function **715**. If that occurs, the DAU Management Control module can adaptively modify the system configuration to begin to deploy, typically although not necessarily slowly, additional radio resources (such as RF carriers, CDMA codes or TDMA time slots) for use by a particular DRU which need those radio resources within its coverage area. At the same time, usually the DAU Management Control module adaptively modifies the system configuration to begin to remove, again typically slowly, certain radio resources (such as RF carriers, CDMA codes or TDMA time slots) for use by a particular DRU where that DRU no longer needs those radio resources within its coverage area.

Although the present invention has been described with reference to the preferred embodiments, it will be under-

T-Mobile v. Dali Wireless Inc.
T-Mobile Ex. 1038

stood that the invention is not limited to the details described thereof. Various substitutions and modifications have been suggested in the foregoing description, and others will occur to those of ordinary skill in the art. Therefore, all such substitutions and modifications are intended to be embraced within the scope of the invention as defined in the appended claims.

APPENDIX I

Glossary of Terms

ACLR Adjacent Channel Leakage Ratio
ACPR Adjacent Channel Power Ratio
ADC Analog to Digital Converter
AQDM Analog Quadrature Demodulator
AQM Analog Quadrature Modulator
AQDMC Analog Quadrature Demodulator Corrector
AQMC Analog Quadrature Modulator Corrector
BPF Bandpass Filter
BTS Base Transceiver System or Base Station
CDMA Code Division Multiple Access
CFR Crest Factor Reduction
DAC Digital to Analog Converter
DAU Digital Access Unit
DET Detector
DHMPA Digital Hybrid Mode Power Amplifier
DDC Digital Down Converter
DNC Down Converter
DPA Doherty Power Amplifier
DQDM Digital Quadrature Demodulator
DQM Digital Quadrature Modulator
DSP Digital Signal Processing
DUC Digital Up Converter
EER Envelope Elimination and Restoration
EF Envelope Following
ET Envelope Tracking
EVM Error Vector Magnitude
FFLPA Feedforward Linear Power Amplifier
FIR Finite Impulse Response
FPGA Field-Programmable Gate Array
GSM Global System for Mobile communications
I-Q In-phase/Quadrature
IF Intermediate Frequency
LINC Linear Amplification using Nonlinear Components
LO Local Oscillator
LPF Low Pass Filter
MCPA Multi-Carrier Power Amplifier
MDS Multi-Directional Search
OFDM Orthogonal Frequency Division Multiplexing
PA Power Amplifier
PAPR Peak-to-Average Power Ratio
PD Digital Baseband Predistortion
PLL Phase Locked Loop
PN Pseudo-Noise
QAM Quadrature Amplitude Modulation
QPSK Quadrature Phase Shift Keying
RF Radio Frequency
RRH Remote Radio Head
RRU Remote Radio Head Unit
SAW Surface Acoustic Wave Filter
UMTS Universal Mobile Telecommunications System
UPC Up Converter
WCDMA Wideband Code Division Multiple Access
WLAN Wireless Local Area Network

What is claimed is:

1. A host unit for use in the transport of wireless communications, comprising:

at least one interface to communicatively couple the host unit to at least one signal source;

at least one interface to communicatively couple the host unit to a plurality of remote units, including at least a first remote unit;

wherein the host unit is configured to receive a plurality of downlink channel signals from the at least one signal source;

wherein the host unit is configured to send digital representations of the plurality of downlink channel signals to the plurality of remote units;

wherein the host unit is configurable to send digital representations of a first set of downlink channel signals to the first remote unit at a first point in time, the first set of downlink channel signals for transmission at an antenna of the first remote unit;

wherein the host unit is configurable to send digital representations of a second set of downlink channel signals to the first remote unit at a second point in time, the second set of downlink channel signals for transmission at the antenna of the first remote unit; and

wherein a number of downlink channel signals in the first set of downlink channel signals is different from a number of downlink channel signals in the second set of downlink channel signals.

2. The host unit of claim **1**, wherein the host unit is configurable to dynamically change from (a) sending the digital representations of the first set of downlink channel signals to the first remote unit to (b) sending the digital representations of the second set of downlink channel signals to the first remote unit.

3. The host unit of claim **1**, wherein the host unit is configurable, based on a change in network conditions, to dynamically change from (a) sending the digital representations of the first set of downlink channel signals to the first remote unit to (b) sending the digital representations of the second set of downlink channel signals to the first remote unit.

4. The host unit of claim **1**, wherein the host unit is configurable, based on load balancing, to dynamically change from (a) sending the digital representations of the first set of downlink channel signals to the first remote unit to (b) sending the digital representations of the second set of downlink channel signals to the first remote unit.

5. The host unit of claim **1**, wherein the host unit is configurable, based on a change in subscriber needs, to dynamically change from (a) sending the digital representations of the first set of downlink channel signals to the first remote unit to (b) sending the digital representations of the second set of downlink channel signals to the first remote unit.

6. The host unit of claim **1**, wherein the host unit is configurable, based on a schedule, to dynamically change from (a) sending the digital representations of the first set of downlink channel signals to the first remote unit to (b) sending the digital representations of the second set of downlink channel signals to the first remote unit.

7. The host unit of claim **1**, wherein the at least one interface to communicatively couple the host unit to the plurality of remote units comprises an optical interface.

8. The host unit of claim **1**, wherein the host unit is configured to packetize each digital representation of a downlink channel signal.

9. The host unit of claim **1**, wherein the host unit is configured to packetize each digital representation of a

T-Mobile v. Dali Wireless Inc.
T-Mobile Ex. 1038

downlink channel signal in compliance with the Common Public Radio Interface (CPRI) standard.

10. A system for transporting wireless communications, comprising:

a host unit;

a plurality of remote units, including at least a first remote unit and a second remote unit;

wherein the host unit comprises at least one interface to communicatively couple the host unit to at least one signal source;

wherein the host unit is configured to receive a plurality of downlink channel signals from the at least one signal source;

wherein the host unit is configured to send digital representations of the plurality of downlink channel signals to the plurality of remote units;

wherein the host unit is configurable to send digital representations of a first set of downlink channel signals to the first remote unit at a first point in time, the first set of downlink channel signals for transmission at an antenna of the first remote unit;

wherein the host unit is configurable to send digital representations of a second set of downlink channel signals to the first remote unit at a second point in time, the second set of downlink channel signals for transmission at the antenna of the first remote unit;

wherein a number of downlink channel signals in the first set of downlink channel signals is different from a number of downlink channel signals in the second set of downlink channel signals; and

wherein the host unit is configured to receive digital signals from each of the plurality of remote units.

11. The system of claim **10**, wherein the host unit is configured to packetize each digital representation of a downlink channel signal.

12. The system of claim **10**, wherein the host unit is connected to each of the plurality of remote units through a direct connection.

13. The system of claim **10**, wherein the host unit is connected to each of the plurality of remote units through an indirect connection.

14. The system of claim **10**, wherein each remote unit comprises at least one interface to communicatively couple the remote unit to another one of the plurality of remote units in a daisy-chain configuration.

15. A method for providing digital signals in a Distributed Antenna System (DAS), comprising:

transmitting from a host unit, at a first point in time, digital representations of a first set of downlink channel signals to a first remote unit, the first set of downlink channel signals for transmission at an antenna of the first remote unit;

transmitting from the host unit, at a second point in time, digital representations of a second set of downlink channel signals to the first remote unit, the second set of downlink channel signals for transmission at the antenna of the first remote unit;

wherein a number of downlink channel signals in the first set of downlink channel signals is different from a number of downlink channel signals in the second set of downlink channel signals.

16. The method of claim **15**, wherein the host unit dynamically changes based on a change in network conditions from (a) sending the digital representations of the first set of downlink channel signals to the first remote unit to (b) sending the digital representations of the second set of downlink channel signals to the first remote unit.

17. The method of claim **15**, wherein the host unit dynamically changes based on load balancing from (a) sending the digital representations of the first set of downlink channel signals to the first remote unit to (b) sending the digital representations of the second set of downlink channel signals to the first remote unit.

18. The method of claim **15**, wherein the host unit dynamically changes based on a schedule from (a) sending the digital representations of the first set of downlink channel signals to the first remote unit to (b) sending the digital representations of the second set of downlink channel signals to the first remote unit.

19. The method of claim **15**, wherein the downlink channel signals are packetized.

20. The method of claim **19**, wherein the downlink channel signals are packetized in compliance with the Common Public Radio Interface (CPRI) standard.

21. A host unit for use in the transport of wireless communications, comprising:

at least one interface to communicatively couple the host unit to at least one signal source;

wherein the host unit is configured to receive a plurality of downlink signals from the at least one signal source, each downlink signal of the plurality of downlink signals comprising a plurality of carriers;

at least one interface to communicatively couple the host unit to a plurality of remote units, including at least a first remote unit and a second remote unit;

wherein the host unit is configured to send a digital representation of any carrier of any downlink signal it receives to any of the plurality of remote units;

wherein the host unit is configured to transmit a digital representation of a first portion of the plurality of carriers to the first remote unit and a digital representation of a second portion of the plurality of carriers to the second remote unit, wherein the digital representation of the first portion includes destination information identifying the first remote unit and the digital representation of the second portion includes destination information identifying the second remote unit, the first portion being different than the second portion; and

wherein the host unit is configured to receive a digital representation of at least one uplink signal from each of the plurality of remote units.

22. The host unit of claim **21** wherein the host unit is configured to packetize the plurality of downlink signals it receives in compliance with the Common Public Radio Interface (CPRI) standard to provide at least the digital representation of the first portion and the digital representation of the second portion.

23. The host unit of claim **21** wherein the destination information identifying the first remote unit is provided in a header of the digital representation of the first portion, and the destination information identifying the second remote unit is provided in a header of the digital representation of the second portion.

24. The host unit of claim **21** wherein the at least one interface to communicatively couple the host unit to the plurality of remote units comprises an optical interface.

25. The host unit of claim **21** wherein the host unit is configured to I/Q map and frame the plurality of downlink signals it receives to provide at least the digital representation of the first portion and the digital representation of the second portion.

26. A host unit for use in the transport of wireless communications, comprising:

at least one interface to communicatively couple the host unit to at least one signal source;

wherein the host unit is configured to receive a plurality of downlink signals from the at least one signal source, each downlink signal of the plurality of downlink signals comprising a plurality of carriers;

at least one interface to communicatively couple the host unit to one or more additional host units;

wherein the host unit is configured to send a digital representation of any carrier of any downlink signal it receives to the one or more additional host units;

at least one interface to communicatively couple the host unit to a plurality of remote units, including at least a first remote unit and a second remote unit;

wherein the host unit is configured to send a digital representation of any carrier of any downlink signal it receives to any of the plurality of remote units;

wherein the host unit is configured to transmit a digital representation of a first portion of the plurality of carriers to the first remote unit and a digital representation of a second portion of the plurality of carriers to the second remote unit, the first portion being different than the second portion; and

wherein the host unit is configured to receive a digital representation of at least one uplink signal from each of the plurality of remote units.

27. The host unit of claim **26** wherein the at least one interface to communicatively couple the host unit to the one or more additional host units comprises an optical interface.

28. The host unit of claim **26** wherein the one or more additional host units includes a plurality of additional host units, and the host unit is connected to at least one of the plurality of additional host units through a direct connection and at least one of the plurality of additional host units through an indirect connection.

29. The host unit of claim **26** wherein the at least one interface to communicatively couple the host unit to the at least one signal source includes a plurality of interfaces to communicatively couple the host unit to a plurality of signal sources.

30. The host unit of claim **26** wherein the digital representation of the first portion includes destination information identifying the first remote unit and the digital representation of the second portion includes destination information identifying the second remote unit.

* * * * *