Trials@uspto.gov
Tel: 571–272–7822

Paper 53
Entered: August 12, 2019

UNITED STATES PATENT AND TRADEMARK OFFICE

BEFORE THE PATENT TRIAL AND APPEAL BOARD

COMMSCOPE TECHNOLOGIES LLC,
Petitioner,

v.

DALI WIRELESS INC.,
Patent Owner.

Case IPR2018-00571
Patent 9,531,473 B2

Before KARL D. EASTHOM, MELISSA A. HAAPALA, and SHARON FENICK, Administrative Patent Judges.

FENICK, Administrative Patent Judge.

FINAL WRITTEN DECISION
35 U.S.C. § 318(a) and 37 C.F.R. § 42.73

T-Mobile v. Dali Wireless Inc.
T-Mobile Ex. 1041

I. INTRODUCTION

In this *inter partes* review, CommScope Technologies LLC ("Petitioner") challenges the patentability of claims 6–21 of U.S. Patent No. 9,531,473 B2 (Ex. 1001, "the '473 patent"), which was assigned to Dali Wireless Inc. ("Patent Owner").

We have jurisdiction under 35 U.S.C. § 6(b)(4). This Final Written Decision, issued pursuant to 35 U.S.C. § 318(a), addresses issues and arguments raised during this *inter partes* review. For the reasons discussed below, we determine Petitioner has proven by a preponderance of the evidence that the challenged claims of the '473 patent are unpatentable. *See* 35 U.S.C. § 316(e) ("In an inter partes review instituted under this chapter, the petitioner shall have the burden of proving a proposition of unpatentability by a preponderance of the evidence.").

A. Procedural History

On February 2, 2018, Petitioner requested *inter partes* review of claims 6–21 of the '473 patent. Paper 1 ("Pet."). Patent Owner filed a Preliminary Response. Paper 19 ("Prelim. Resp."). On August 14, 2018, based on the record before us, we instituted an *inter partes* review. Paper 26 ("Institution Decision" or "Inst. Dec.").

Our review encompasses all grounds asserted in the Petition, *viz.*:

Reference(s)	Basis	Claims Challenged
Sabat[1]	§ 102(b)	6–14, 16, 18

[1] Sabat et al., U.S. Patent Application Pub. No. 2009/0180426 A1, pub. July 16, 2009 (Ex. 1008).

Reference(s)	Basis	Claims Challenged
Sabat and any of CPRI Spec.[2], Wu[3], Stratford[4], Bauman[5], Kummetz[6], or Schwartz2[7] ("the Daisy-Chain References")	§ 103	15, 17, and 19–21
Sabat and Wu, or Sabat and Wu and any of the Daisy-Chain References	§ 103	6–21
Oh[8]	§ 102(b)	6, 7, 11, 12, and 19
Oh and the "Standard Reference Books"[9]	§ 103	8, 13
Oh or Oh and Feder[10]	§ 103	18
Oh and Feder	§ 103	20
Oh and Sabat	§ 103	9, 10, 14, 16
Oh and Bauman and/or Feder	§ 103	21[11]
Oh, Sabat, and Bauman and/or Feder	§ 103	15, 17

[2] CPRI Specification V 4.0 (2008-06-30) Interface Specification (Ex. 1010).
[3] Wu et al., U.S. Patent Application Pub. No. 2010/0128676 A1, pub. May 27, 2010 (Ex. 1011).
[4] Stratford et al., U.S. Patent No. 6,785,558 B1, iss. Aug. 31, 2004 (Ex. 1015).
[5] Bauman et al., U.S. Patent No. 8,958,789 B2, iss. Feb. 17, 2015 (Ex. 1009).
[6] Kummetz et al., U.S. Patent No. 8,346,091 B2, iss. Jan. 1, 2013 (Ex. 1013).
[7] Schwartz et al., U.S. Patent No. 6,801,767 B1, iss. Oct. 5, 2004 (Ex. 1018).
[8] Oh et al., U.S. Patent No. 7,286,507 B1, iss. Oct. 23, 2007 (Ex. 1005).
[9] Petitioner defines "Standard Reference Books" to include three books, and provides front and back matter and selected pages as Exhibits as follows: Charles E. Spurgeon, Ethernet The Definitive Guide 99, 101–201 (O'Reilly & Associates, Inc., 2000) (Ex. 1028); Ray Horak, Telecommunications and Data Communications Handbook 353–366, 375–385, 394–397 (John Wiley & Sons, Inc. 2007) (Ex. 1027); and Network Design Basics for Cabling Professionals 41–67, 69–117, 119–134, 315–327 (Ex. 1007).
[10] Feder et al., U.S. Patent Application Pub. No. 2005/0157675 A1, pub. July 21, 2005 (Ex. 1006).
[11] The grounds chart in the Petition indicates claim 15 is challenged based on a different combination, but the Petition provides arguments relating to the combination of Oh, Sabat, and Bauman and/or Feder, as reflected in the next line of this chart. *See* Pet. 9, 73–75; Paper 36 ("Pet. Reply"), 19–20.

Reference(s)	Basis	Claims Challenged
Wu	§ 102(e)	6–8, 11–13, 18–21
Wu	§ 103	6–21
Wu and Sabat	§ 103	9, 10, 14–17

Petitioner also relies on the declaration of Dr. Anthony Acampora, Ex. 1003.

Patent Owner filed a Patent Owner Response (Paper 32, "PO Resp.") and Petitioner filed a Reply (Paper 36, "Pet. Reply"). Patent Owner also filed a Sur-Reply (Paper 40, "PO Sur-Reply"). Patent Owner also relies on the declaration of Dr. Bim, Ex. 2007. Oral Argument occurred on April 4, 2019, and a transcript of that hearing is of record. Paper 52 ("Tr.").

Papers filed regarding a Motion to Exclude are addressed *infra* at Section II.G.

B. Related Matter

The parties state that the '473 patent has been asserted against Petitioner in the following district court case: *CommScope Technologies LLC v. Dali Wireless, Inc.*, No. 3:16-cv-00477-B (N.D. Tex.). Pet. 1; Paper 4, 2.

C. The '473 Patent

The '473 patent is titled "Remotely Reconfigurable Distributed Antenna System and Methods" and relates to a Distributed Antenna System (DAS) that "enables a high degree of flexibility to manage, control, enhance, [and] facilitate the usage and performance of a distributed wireless network." Ex. 1001, [54], [57]. According to one embodiment of the invention, a distributed antenna system includes digital access units (DAUs), which each connect to a base station. *Id.* at 6:1–10. The distributed antenna system receives downlink data via radio frequency (RF) signals from the

base station. *Id.* at 6:25–32. The DAUs provide the received signals to multiple remote radio head units (RRUs). *Id.* at 6:14–17. Figure 1 of the '473 patent, reproduced below, is a block diagram showing the basic structure and an example of a downlink transport scenario.

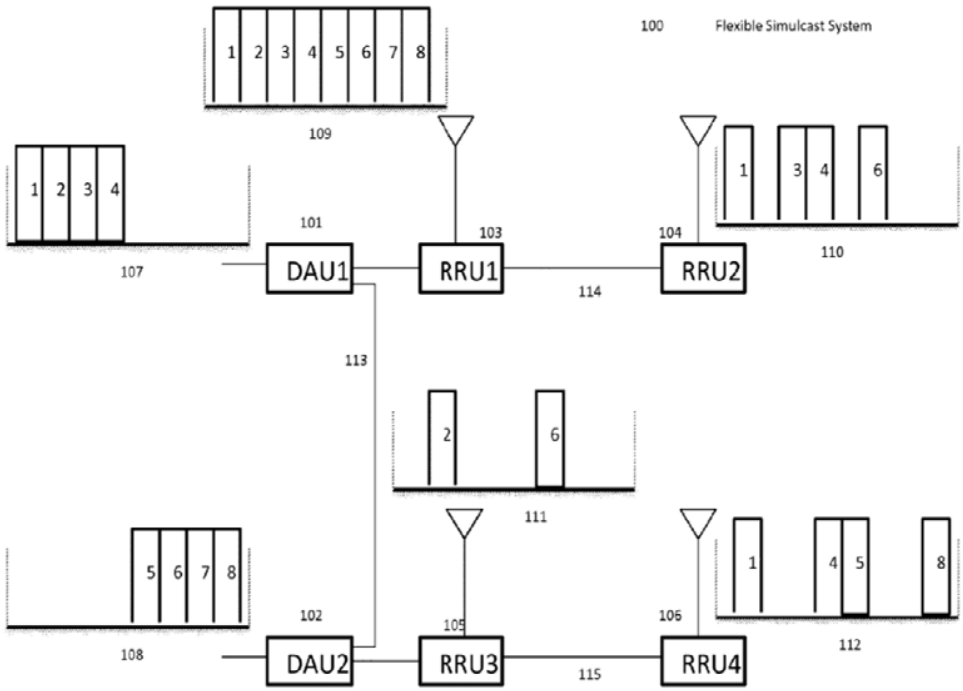

Figure 1: Flexible Simulcast Downlink Example

Figure 1 depicts two DAUs, DAU1 101 and DAU 102, which provide signals to RRUs, RRU1 103 through RRU4 106. *Id.* at 5:36–39, 6:1–7:18. Some RRUs, e.g., RRU2 104 shown in Figure 1, connect to a DAU via "daisy chaining" through intermediary RRUs, e.g., RRU1 103. *Id.* at 7:53–56.

As shown in Figure 1, DAU1 101 receives composite downlink signal 107 from a first base station (not shown) comprised of carriers 1 through 4, and DAU2 102 receives composite downlink signal 108 from a second base station (not shown) comprised of carriers 5 through 8. *Id.* at 6:25–32. Bidirectional optical cable 113 connects DAU1 101 and DAU2 102,

rendering carriers 1–8 available to each DAU. *Id*. at 6:38–44. Software settings within RRU1 103 through RRU4 106 control which carrier signals are present in the downlink output signal at the antenna port of the RRUs. *Id*. at 6:44–47, 6:56–59, 6:66–7:2, 7:9–12. Embedded software control modules in the DAUs and the RRUs aid in "determining and/or setting the appropriate amount of radio resources . . . assigned to a particular RRU or group of RRUs to meet desired capacity and throughput objectives." *Id*. at 11:41–63. The antenna ports of the RRUs receive uplink signals and transmit them to the base station via the DAUs. *Id*. at 6:17–22, 8:65–9:5, 9:47–49.

D. Illustrative Claim

Claims 6 and 11 of the challenged claims of the '473 patent are independent. Claim 11 illustrates the claimed subject matter:

> 11. A system for transporting wireless communications, comprising:
>
> a host unit;
>
> a plurality of remote units, including at least a first remote unit and a second remote unit;
>
> wherein the host unit comprises at least one interface to communicatively couple the host unit to at least one signal source;
>
> wherein the host unit is capable of receiving a plurality of downlink signals from the at least one signal source;
>
> wherein the host unit further comprises at least one interface to communicatively couple the host unit to the plurality of remote units;
>
> wherein the host unit is capable of sending a digital representation of any downlink signal it receives to any of the plurality of remote units;
>
> wherein the host unit is configurable to transmit a digital representation of a first subset of the plurality of downlink signals to the first remote unit and a digital representation of a

> second subset of the plurality of downlink signals to the second remote unit, the second subset being different than the first subset;
>
> wherein the host unit is capable of receiving a digital representation of at least one uplink signal from the each of the plurality of remote units.

Ex. 1001, 13:53–14:21.

II. ANALYSIS

A. Principles of Law

It is a petitioner's burden to demonstrate unpatentability in an *inter partes* review. *See Dynamic Drinkware, LLC v. Nat'l Graphics, Inc.*, 800 F.3d 1375, 1378 (Fed. Cir. 2015) (citing *Tech. Licensing Corp. v. Videotek, Inc.*, 545 F.3d 1316, 1326–27 (Fed. Cir. 2008)).

To anticipate a claim, a prior art reference must disclose every limitation of the claimed invention, either expressly or inherently. *Blue Calypso, LLC v. Groupon, Inc.*, 815 F.3d 1331, 1341 (Fed. Cir. 2016). However, this is not an *ipsissimis verbis* test, i.e., identity of terminology is not required. *In re Bond*, 910 F.2d 831, 832 (Fed. Cir. 1990).

A patent claim is unpatentable under 35 U.S.C. § 103(a) if the differences between the claimed subject matter and the prior art are "such that the subject matter as a whole would have been obvious at the time the invention was made to a person having ordinary skill in the art to which said subject matter pertains." *KSR Int'l Co. v. Teleflex Inc.*, 550 U.S. 398, 406 (2007). The question of obviousness is resolved based on the following underlying factual determinations: (1) the scope and content of the prior art; (2) any differences between the claimed subject matter and the prior art; (3) the level of skill in the art; and (4) objective evidence of nonobviousness,

i.e., secondary considerations.[12] *Graham v. John Deere Co.*, 383 U.S. 1, 17–18 (1966). "To satisfy its burden of proving obviousness, a petitioner cannot employ mere conclusory statements. The petitioner must instead articulate specific reasoning, based on evidence of record, to support the legal conclusion of obviousness." *In re Magnum Oil Tools Int'l, Ltd.*, 829 F.3d 1364, 1380 (Fed. Cir. 2016). We analyze the asserted grounds with the principles stated above in mind.

B. Level of Ordinary Skill in the Art

Petitioner asserts that the proper level of ordinary skill in the art is a "bachelor's degree in electrical engineering (or equivalent field) with 2-3 years of work experience in wireless communications." Pet. 12 (citing Ex. 1003 ¶ 20). Patent Owner contends that the proper level of skill is that of a person who "would have had a bachelor's degree in computer science, computer engineering, electrical engineering, or their equivalent, and at least three years' experience working with wireless technology." PO Resp. 17 (citing Ex. 2007 ¶ 17). Based on the evidence of record, including the types of problems and solutions described in the '473 patent and the asserted prior art, we agree with and adopt Patent Owner's definition of the level of ordinary skill in the art, although our findings and conclusions would be the same if we applied Petitioner's somewhat narrower proposed definition.

C. Claim Construction

In an *inter partes* review filed before November 13, 2018, the Board interprets claims of an unexpired patent using the broadest reasonable

[12] The record contains no allegations or evidence of secondary considerations.

construction in light of the specification of the patent. *See* 37 C.F.R. § 42.100(b) (2017); *Cuozzo Speed Techs., LLC v. Lee*, 136 S. Ct. 2131, 2144–46 (2016) (upholding the use of the broadest reasonable interpretation standard as the claim interpretation standard to be applied in an *inter partes* review); Changes to the Claim Construction Standard for Interpreting Claims in Trial Proceedings Before the Patent Trial and Appeal Board, 83 Fed. Reg. 51340 (Oct. 11, 2018) (noting that the changes apply to *inter partes* reviews filed on or after November 13, 2018). Under that standard, and absent any special definitions, claim terms generally carry their ordinary and customary meaning, as would be understood by one of ordinary skill in the art, at the time of the invention. *In re Translogic Tech., Inc.*, 504 F.3d 1249, 1257 (Fed. Cir. 2007). Any special definitions for claim terms must be set forth with reasonable clarity, deliberateness, and precision. *In re Paulsen*, 30 F.3d 1475, 1480 (Fed. Cir. 1994). Regardless of the standard employed, nothing in this record indicates that a district court claim construction standard would alter the outcome here.

Petitioner requests that we construe "packetizing." Pet. 12. Patent Owner presents arguments regarding "packetizing," and additionally argues for constructions of the terms "downlink signal," "wherein the host unit is capable of sending a digital representation of any downlink signal it receives to any of the plurality of remote units," and "configurable to." PO Resp. 6–17.

1. "packetizing"

Petitioner argues that the broadest reasonable construction for "packetizing," which appears in claims 9, 10, 14, and 16 is "making units of data which are sent over a network." Pet. 12. In the Institution Decision, we

declined to construe "packetizing" but invited the parties to provide briefing on this issue. Inst. Dec. 9–10.

Patent Owner argues that the Specification of the '473 patent describes data packets as including headers that identify source or destination information, and thus argues that any construction should require "including source or destination information with the data to be transmitted." PO Resp. 14–15 (citing Ex. 1001, 8:41–47, 9:10–13); Tr. 26:17–27:4 (clarifying that Patent Owner's position is that the construction should require, rather than simply "encompass," the inclusion of source or destination information).

Petitioner presents definitions of packetizing from various technical dictionaries to show that a packet is "a unit of data which is sent over a network," and argues that "packetizing" should be construed as creating ("making") such packets. Pet. 12. (quoting Ex. 1022, 4; citing Ex. 1023–25). Patent Owner argues Petitioner's proposed construction is based only on extrinsic evidence and ignores the balance of the quoted definition used as the basis of Petitioner's claim construction, which describes a packet as "compris[ing] a payload containing some data, and either a header or a trailer containing control information." Ex. 1022, 4 (cited in PO Resp. 16); PO Resp. 15–16. Petitioner responds that while the definition used does refer to control information, "there is nothing in the definition that refers to control information being source or destination information" and other control information could be included rather than source or destination information. Pet. Reply 6. Petitioner, however, does not describe how any form of control information is included in Petitioner's proposed definition.

Turning to intrinsic evidence, Patent Owner argues that the Specification describes the transmission of headers with data packets, for uplink signals identifying the source of the packet, and for downlink signals identifying destination information. PO Resp. 14–15 (citing Ex. 1001, 8:41–47, 9:10–13; Ex. 2007 ¶¶ 39, 41–42). Patent Owner cites a localization capability described in the Specification, and notes that without the inclusion of source information in uplink data, that localization capability would be "frustrated." *Id.* at 15 (citing Ex. 1001, 4:55–66; Ex. 2007 ¶¶ 40–41). Petitioner argues in response that this localization capability is not claimed or referred to in the challenged claims. Pet. Reply 6.

Petitioner quotes originally filed claim 3 in the application which became the '473 patent, which describes "I/Q mapping and framing the digitized [downlink] signals . . . to provide packetized signals" and a dependent claim that further specifies that "the packetized signals each include a destination address." Pet. Reply 4–5 (quoting Ex. 1002, 431–432). Thus, Petitioner argues, claim differentiation requires "that the packetizing called out in independent application claim 3 did not require a destination address." *Id.* at 5.

Patent Owner's analysis is persuasive and supported by the Specification. The Specification states "[h]eader information is transmitted along with the data packet which identifies the RRU and DAU that corresponds to the individual data packet." Ex. 1001, 9:10–13. Patent Owner explains "[b]y providing the identities of both the DAU and the RRU, the header may be used to identify a region in which a particular user is located." PO Resp. 14–15 (citing Ex. 2007 ¶ 41). The Specification further describes that the "system of the invention uses this header

information in conjunction with the mobile user's radio signature to localize the user to a particular cell." Ex. 1001, 4:55–66.

We agree with Patent Owner that the Specification describes adding header information to framed data to identify the source of the packet for an uplink signal and aid in localization. PO Resp. at 15 (citing Ex. 1001, 4:55–66; Ex. 2007 ¶¶ 40–41). The Specification mentions the inclusion of source information as a general requirement, describing that if Common Public Radio Interface (CPRI) is not used to frame packets, another standard can be used provided that standard "uniquely identif[ies] data packets with respective RRUs." Ex. 1001, 9:8–10. Petitioner's claim differentiation argument is not persuasive, as the cancelled dependent claim specifies the inclusion of a destination address, which does not preclude a source address *or* destination address being required in the claim from which it depended. *See* PO Sur-Reply 9. We are more persuaded by Patent Owner's intrinsic evidence than by the extrinsic evidence cited by Petitioner.

After consideration of the entire record, we agree that the broadest reasonable construction in light of the Specification of "packetizing" a signal requires the inclusion of source or destination information.

2. "wherein the host unit is capable of sending a digital representation of any downlink signal it receives to any of the plurality of remote units"

Patent Owner argues that broadest reasonable interpretation of the "wherein the host unit is capable of sending a digital representation of any downlink signal it receives to any of the plurality of remote units" limitation in claims 6 and 11 is "wherein the host unit is capable of sending a digital representation of a specific downlink signal it receives to a specific one of the plurality of remote units." PO Resp. 10–11. Patent Owner argues that

this is because "one of skill in the art would understand from the claim language and the specification that the host unit must be able to extract specific radio resources from composite signals received from a signal source and specify precisely where to send each individual radio resource." *Id.* (citing Ex. 2007 ¶¶ 51–52). Petitioner contends that no portion of the Specification requires the extraction of any portion of the plurality of downlink signals or individual transmission to remote units, and on the contrary, the Specification describes all downlink signals arriving at each remote unit, where digital upconverters in the remote units select which signals to turn on and off for broadcast. Pet. Reply 2–3 (citing Ex. 1001, 6:61–65).

Patent Owner makes clear in other arguments that it interprets its proposed construction as requiring the host unit to be capable of sending a digital representation of a specific downlink signal to only one remote unit without sending it to any other remote units. *See* PO Resp. 54–57; PO Sur-Reply 22–23; Tr. 53:16–60:25. Patent Owner cites the declaration of its expert, Dr. Bim, in which Dr. Bim cites the "fine-grained ability to send specific radio resources to specific remote units" of the '473 patent as providing "precise control over which radio resources are allocated where and also enables more efficient use of bandwidth between a host unit and its remotes." Ex. 2007 ¶ 51 (cited at PO Resp. 10–11, PO Sur-Reply 3).

We are not persuaded that the claim language at issue requires the host unit to be capable of sending a specific downlink signal to a specific (one) resource (i.e., the claim does not require extracting a specific downlink signal to send to only a specific resource.) The '473 patent specifically discloses that remote units use upconverters to determine which radio

resources to broadcast from among the resources received—so a host unit need not differentiate the carriers it sends to specific remote units because the latter can control the uplink resources. Ex. 1001, 6:44–7:12, 11:56–63 (describing carriers 1, 4, 5, and 8 arriving at RRU4 from RRU3). Therefore, we decline to adopt Patent Owner's claim construction. Other than declining to adopt Patent Owner's construction, we agree with Petitioner that we do not need to explicitly construe this claim term.

3. "downlink signal"

Patent Owner argues that the broadest reasonable interpretation of the term "downlink signal" is "radio resource," and that "radio resources may be, for example, 'RF carriers, CDMA codes, or TDMA time slots.'" PO Resp. 6–7 (quoting Ex. 1001, 4:10–12). Patent Owner notes that the '473 patent describes the receipt of groups of radio resources in composite signals from base stations, and that each radio resource is treated individually. *Id.* at 7–8. Patent Owner does not make clear, other than be providing three examples from the '473 patent, what a radio resource is; instead Patent Owner contrasts its construction with a construction that encompasses composite signals such as the composite signal sent by the base stations in the '473 patent. *Id.* at 9; Ex. 1001, 6:25–28 (cited at PO Resp. 7). Patent Owner uses its construction to distinguish the host unit teachings of Sabat (which it asserts "is not able to extract radio resources from incoming base station sector signals") and of Oh (which it asserts "sends an *entire coverage area* to an antenna unit") from those in the challenged claims. PO Resp. 30–32, 44–45.

For the purposes of this decision, which does not rely on these teachings of Sabat and Oh, no construction is deemed necessary. *Vivid Techs.*, 200 F.3d at 803.

4. "configurable to transmit a digital representation of a first subset of the plurality of downlink signals to the first remote unit and a digital representation of a second subset of the plurality of downlink signals to the second remote unit, the second subset being different than the first subset"

Patent Owner argues that the "configurable to . . ." claim limitation does not state an intended use, but rather should be interpreted to be a limitation of the invention. PO Resp. 11–14. Patent Owner additionally notes that the District Court found that the claim term did not state an intended use. *Id.* at 12–13; Ex. 2005, 26–28. Petitioner does not present any construction for this term.

Patent Owner persuasively argues that the configurability encompassed in this limitation is a key functionality of the system, and that it is not merely context in which the invention may be used. PO Resp. 11–14. We do not construe the "configurable to" limitation as a statement of intended use.

D. Asserted Anticipation Based on Wu and Asserted Obviousness Based on Wu

Petitioner asserts claims 6–8, 11–13, and 18–21 are anticipated by Wu. Pet. 75–88. Additionally, Petitioner asserts claims 6–21 would have been obvious over Wu. *Id*. at 89–90. Patent Owner addresses these assertions in Patent Owner's Response. PO Resp. 21, 54–59.

1. Overview of Wu

Wu is titled "Carrier Channel Distribution System" and describes a system where signals are communicated between base transceiver stations and remote transceiver units (RTUs), providing fine-grained control for this

communication, splitting carrier channels and routing only some channels to RTUs according to a routing policy. Ex. 1011, [54], [57], ¶¶ 9, 11, 38–44. The base transceiver station may receive signals within a plurality of frequency bands, each of which may comprise multiple channels. *Id.* ¶¶ 11, 35, 37, 38. Figure 2 of Wu, reproduced below, is a schematic of a base transceiver station and associated host units.

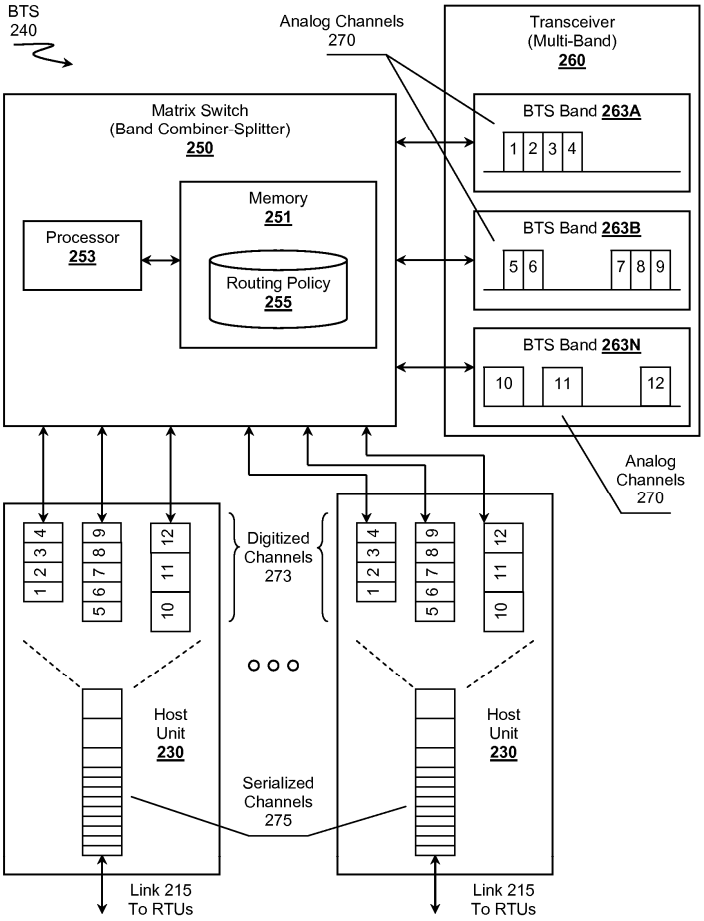

Figure 2

Figure 2 shows base transceiver station (BTS) 240 including transceiver 260, matrix switch 250, and host units 230. *Id.* ¶¶ 15, 34–36. Transceiver 260 receives signals on BTS bands 263A through 264N, and

each may include multiple channels 270, e.g., channels 270 labelled 5 through 9 in BTS band 263B. *Id.* ¶¶ 35, 37. Transceiver 260 forwards the received channels 270 to matrix switch 250 that routes them according to Routing Policy 255 to host unit 230, which further distributes them to RTUs over link 215. *Id.* ¶ 38. The system is bi-directional, and carrier channel signals are received by host units 230 from RTUs and forwarded to transceiver 260 for transmission within bands 263. *Id.* ¶¶ 36, 49. Wu also discloses that some signals may be received at an RTU with another RTU acting as intermediary. *Id.* at Figs. 1, 4, ¶¶ 33, 51.

Policy 255 can be reconfigured in order to change the routing of channels to the various RTUs. *Id.* ¶¶ 48, 49. Channels may be routed, allocated, or distributed, for example, based on anticipated requirements of areas at a certain time of day, or on current traffic load. *Id.* ¶¶ 43, 44. Transmissions between host units and RTUs are disclosed as preferably being according to the CPRI Standard. *Id.* ¶¶ 31, 49.

2. Claims 6 and 11

a. Petitioner's Initial Showing – Claim 11

Petitioner persuasively shows that Wu discloses claim 11's preamble "system for transporting wireless communications." Pet. 78 (citing Ex. 1011 ¶¶ 2, 4, 5, 9). With respect to the host unit of claim 11, Petitioner argues that a combination of Wu's matrix switch 250 and host units 230 disclose the claimed host unit. *Id.* (citing Ex. 1011, Fig. 2, elements 250, 230). To explain the alleged disclosure of the claimed host unit in Wu, Petitioner presents an annotated version of Wu's Figure 2, reproduced below.

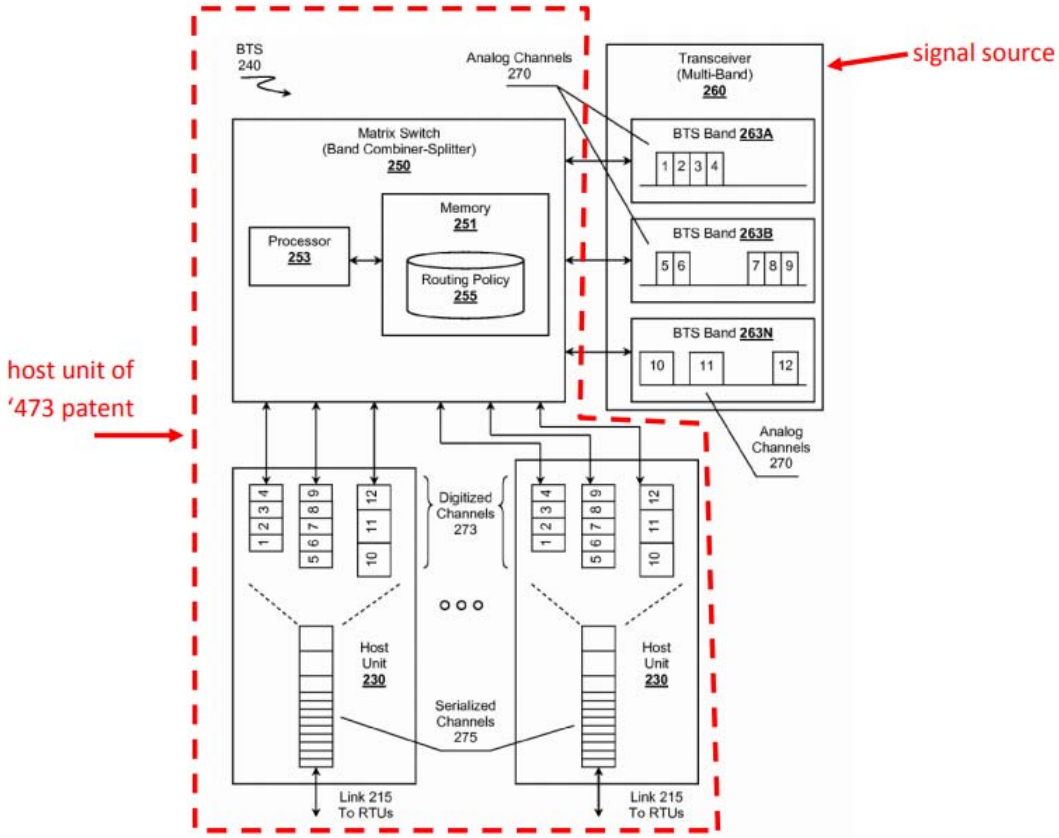

Figure 2

Id. at 77. Figure 2, as annotated by Petitioner, shows a dotted red box enclosing Wu's matrix switch 250 and Wu's host units 230.

Petitioner persuasively shows that Wu's description of multiband transceiver 260 discloses the signal source of claim 11. *Id.* at 79. Petitioner also persuasively shows that Wu's description of RTUs discloses the claimed plurality of remote units. *Id.* (citing Ex. 1011, Fig. 1, ¶¶ 11, 30, 33).

With respect to the claim limitations requiring that "the host unit comprises at least one interface to communicatively couple the host unit to" the signal source and "the host unit is capable of receiving a plurality of downlink signals from" the signal source, Petitioner persuasively relies on the matrix switch 250 of Wu, which communicatively couples to the multi-

band transceiver (signal source) and is capable of receiving a plurality of downlink signals from that transceiver. *Id.* at 79–80 (citing Ex. 1011, Fig. 2, ¶ 38).

Petitioner persuasively shows that Wu's description of host unit 230's connections with RTUs discloses the limitation regarding an interface of the host unit to communicatively couple to the remote units. *Id.* at 80 (citing Ex. 1011 ¶¶ 30, 51).

With respect to the host unit capability to send a digital representation of downlink signals to any of the plurality of remote units, Petitioner persuasively relies on Wu's disclosures of a matrix switch, which provides fine-grained control over individual carrier channels by routing them, according to a routing policy, including routing each channel individually to one or more RTUs. *Id.* at 80–81 (citing Ex. 1011 ¶¶ 9, 11, 30, 38–47, 54). Petitioner addresses the host unit's configurability to transmit a first subset of a plurality of downlink signals to a first remote unit and a second subset to a second remote unit by referencing back to these citations, and Petitioner further notes a specific example provided in Wu in which the system routes a first carrier channel to one RTU and a second carrier channel to a second RTU. *Id.* at 82–83 (quoting Ex. 1011 ¶ 47).

Lastly, with respect to claim 11, Petitioner persuasively argues that Wu discloses bi-directional digital communication between the RTUs and the host unit and explains how this and related descriptions disclose the claimed capability of the host unit to receive at least one uplink signal from each RTU. *Id.* at 83 (citing Ex. 1011 ¶¶ 36, 56).

b. Analysis of Parties' Positions – Claim 11

In response to the Petition and Institution Decision, Patent Owner presents two arguments relating to Petitioner's contentions regarding Wu and claim 11. PO Resp. 54–58. First, Patent Owner argues that Wu does not disclose a host unit "capable of sending a digital representation of any downlink signal it receives to any of the plurality of remote units" (the "capable of sending" limitation) as required by claim 11. *Id.* at 54–57; PO Sur-Reply 22. Second, Patent Owner argues that Wu does not disclose a host unit "configurable to transmit a digital representation of a first subset of the plurality of downlink signals to the first remote unit and a digital representation of a second subset of the plurality of downlink signals to the second remote unit, the second subset being different from the first subset" (the "configurable to transmit" limitation) as further required by claim 11. PO Resp. 57–58; PO Sur-Reply 23.

(1) Wu's host units 230 and matrix switch 250

At least in part, each of these arguments relies on Patent Owner's contention that Wu's host units (e.g. shown as elements 230 in Wu's Figure 2) do not have the capability or configurability required by the "capable of sending" limitation or the "configurable to transmit" limitation. PO Resp. 54–58. For example, with respect to the "capable of sending" limitation, Patent Owner argues that Wu's matrix switch receives composite signals and distributes them to the Wu host units, but that the Wu "host units themselves do not perform any switching or routing of signals." *Id.* at 55. As detailed above, however, Petitioner relies on the combination of Wu's matrix switch 250 and host units 230 as reading on the host unit of claim 11. Pet. 78.

The claim does not require a unitary structure for the host unit, and Patent Owner does not advance any specific basis to distinguish the claimed host unit from Wu's matrix switch 250 and host units 230 considered together. Patent Owner argues a failure to show obviousness, as follows:

> When showing a high level view of its system, Wu groups its multi-band transceiver and matrix switch in BTS 140, while leaving its host units 130 as separate entities. Ex. 2007, ¶147; [Ex. 1011], Fig. 1. Figure 2 similarly illustrates the multi-band transceiver 260 and the matrix switch 250 as the BTS 240, while leaving the host units 230 as distinct components. Ex. 2007, ¶147; [Ex. 1011], Fig. 2. The correct way to group Wu's components, if grouping were desirable, would be to group the hosts with their respective RTUs to form multiple DASes, and to group the multiband transceiver 260 and the matrix switch 250 to form a BTS 240. Ex. 2007, ¶147. Because a conventional DAS is made up of a host unit and one or more remote antennas, a POSITA considering Wu would view its functional groupings just as Wu itself depicts its system in Figure 1 [of Wu]: a BTS 140 connected to multiple DASes via the multiple host units 130. Ex. 2007, ¶148. Petitioner's proposed groupings are, therefore, incorrect, and clearly motivated by a hindsight need to find elements of the '473 Patent's claims in the Wu reference. *Id.* at ¶¶148, 163–164.

PO Resp. 55–56. However, we have before us both an anticipation and an obvious ground relating to the unpatentability of claim 11 over Wu. We are persuaded that Wu discloses the claimed host unit as a combination of the matrix switch and host units. Identity of terminology is not required for anticipation. *In re Bond*, 910 F.2d at 832. Patent Owner does not argue a difference—structural, functional, or otherwise—between the identified elements from Wu and the claimed host unit, but merely that multiple elements are identified as corresponding to the host unit. *In re Gleave*, 560 F.3d 1331, 1334 (Fed. Cir. 2009) ("A reference is anticipatory" if it

discloses "each and every element of the claimed invention, whether it does so explicitly or inherently."). With respect to anticipation, we agree that the matrix switch and host units function together to disclose the claimed host unit.

With respect to obviousness, we also agree with Petitioner that it would have been obvious to place the functionality of both Wu's matrix switch and host units in a single unit. Pet. 89–90 (citing Ex. 1003 ¶ 289); *In re Larson*, 340 F.2d 965, 968 (CCPA 1965) ("[U]se of a one piece construction instead of the structure disclosed in [the prior art] would be merely a matter of obvious engineering choice."). In arguing that "the correct way to group Wu's components, if grouping were desirable" would be with a host unit and the RTUs connected to it forming a group, Patent Owner does not account for Wu's teaching that these RTUs are, in fact, <u>remote</u> transceiver units, and may frequently "lack wireless line-of-sight to the base stations" and, in some embodiments, be ten kilometers away from the base transceiver station or connected over a "[g]eographic [o]bstacle." Ex. 1011 ¶¶ 4, 33, Fig. 1. We are not persuaded that there is only one "correct way" to group components, or that if there were, it would be to group host units and remote antennae. We agree with Petitioner that it would have been obvious to place the functionality of the matrix switch and host units within a single unit.

(2) the "capable of sending" limitation and the "configurable to transmit" limitation

Patent Owner argues that, even considering the matrix switch and host units of Wu together, Wu's matrix switch routes signals to Wu's host units, each of which "is only capable of forwarding signals to its connected remote units, not to any specific remote unit." PO Resp. 55; PO Sur-Reply 22–23;

Tr. 54:8–58:4. Patent Owner describes Wu's system as providing "incremental improvement in flexibility" but argues that "it lacks the flexibility to precisely distribute different groups of signals to specific remote antennas." PO Resp. 21. This line of argument is based on Patent Owner's claim construction position that the "capable of sending" limitation requires signals to be sent only to one specific remote unit, which we have rejected. Instead, we are persuaded by Petitioner's showing that Wu's matrix switch allows individual carrier channels to be routed, via host units, to specific connected remote units. Pet. 80–81 (citing Ex. 1011 ¶¶ 9, 11, 30, 38–47, 54). While "sending a digital representation of any downlink signal . . . to any of the plurality of remote units" may, in the case in which multiple remote units are connected to one of Wu's host units, mean that all such remote units receive the downlink signal, as discussed *supra* at Section II.C.2, this is consistent with the "capable of sending" limitation.

Similarly, Patent Owner concedes, with respect to the "configurable to transmit" limitation, that Wu's matrix switch can route channels to different host units, but argues that "no component within the Wu system is capable of specifying a specific RTU to receive a particular signal." PO Resp. 57. However, again, we are not persuaded that claim 11 requires specifying only one remote unit receive a particular signal, and thus this argument does not rebut Petitioner's showing.

c. Single-reference Obviousness – Claim 11

While Petitioner and Patent Owner largely address anticipation and obviousness with the same arguments, as discussed in the Institution Decision, "though anticipation is the epitome of obviousness, [they] are separate and distinct concepts." *Jones v. Hardy*, 727 F.2d 1524, 1529 (Fed.

Cir. 1984) (quoted in Inst. Dec. 38.); Inst. Dec. 38–39. Single reference obviousness requires a showing of motivation to modify a reference when a party argues that such a modification must be made to meet the limitations of a claim. *Monsanto Tech. LLC v. E.I. DuPont de Nemours & Co.*, 878 F.3d 1336, 1346 (Fed. Cir. 2018). Here, no such modification is proposed.

With the exception of the argument relating to the grouping of Wu's matrix switch and host units, addressed above, Petitioner makes no additional arguments relating to the obviousness grounds, as distinct from the anticipation grounds.

d. Conclusion – claims 6 and 11

With respect to independent claim 6, Petitioner persuasively relies on its arguments relating to claim 11, noting that independent claim 6 is "subsumed" by claim 11 because the system of claim 11 comprises a host unit as in claim 6, along with a plurality of remote units. Pet. 16–17, 75. Patent Owner also addresses claims 6 and 11 jointly. PO Resp. 54–58.

Based on the foregoing discussion and a review of the record, Petitioner shows by a preponderance of evidence that Wu anticipates claims 6 and 11, and that claims 6 and 11 would have been obvious over Wu.

3. Claims 7, 8, 12, and 13

Claims 7 and 12 each specify that "each downlink signal in the plurality of downlink signals comprises a signal from a mobile telephone carrier." Petitioner argues that Wu's disclosure of the use of the system by "wireless carriers" to transport "voice" signals discloses the claimed downlink signals comprising "a signal from a mobile telephone carrier." Pet. 83–84 (citing Ex. 1011 ¶ 3; Ex. 1003 ¶¶ 281–282).

With respect to claims 8 and 13, which each specify that "the at least one interface to communicatively couple the host unit to a plurality of remote units comprises an optical interface," Petitioner argues that the links between the RTUs in Wu and the host units 230 are described as optical fiber links, with the RTUs disclosed as including optical converters. *Id.* at 84 (citing Ex. 1011 ¶¶ 4, 30, 33, 51, Figs. 1, 6-1, 7-1; Ex. 1003 ¶ 283).

In the Institution Decision, we found that Petitioner made a sufficient showing with respect to the added limitations of these claims. Inst. Dec. 38. Patent Owner does not respond to this preliminary determination and does not present separate arguments for these claims. After further consideration, and based on the summary above, the record supports this preliminary determination by a preponderance of evidence.

Based on the foregoing discussion and a review of the record, Petitioner shows by a preponderance of evidence that Wu anticipates claims 7, 8, 12, and 13, and that claims 7, 8, 12, and 13 would have been obvious over Wu.

4. Claim 19

Claims 18 through 20 depend from claim 11 and relate to the connections between the host unit and the claimed plurality of remote units. We address claim 19 first, and claims 18 and 20 in the next subsection.

Claim 19, dependent on claim 11, adds the further limitation that "the host unit is connected to each of the plurality of remote units through an indirect connection." Petitioner persuasively shows that Wu discloses a cascade configuration, in which some RTUs are not directly connected to a host unit, but rather are connected via another RTU. Pet. 86–87 (citing Ex. 1011 ¶¶ 12, 51, Figs. 1, 4, 5–1; Ex. 1003 ¶ 286).

In response to the Petition and Institution Decision, Patent Owner argues that, as claim 19 requires that each of the remote units must be connected indirectly, the limitation cannot be disclosed in the portion of Wu referred to by Petitioner, in which indirect connections for some RTUs are provided through an intermediate RTU. PO Resp. 59 (citing Ex. 1011 ¶ 12; Ex. 2007 ¶ 157). The intermediate RTU, Patent Owner argues, is directly connected to the host unit, and this does not teach or suggest "each of the plurality of remote units" is connected through an indirect connection. *Id.*

In response, Petitioner argues that while claim 19 requires that "each of the plurality of remote units" be indirectly connected, that claimed plurality can be disclosed by any two remote units in the system, regardless of the presence of additional remote units. Pet. Reply 16, 24.

Claim 11 uses open-ended "comprising" language, "which is generally understood to signify that the claims do not exclude the presence in the accused apparatus of factors in addition to those explicitly recited." *Vivid Techs.*, 200 F.3d at 811. The remote units referred to by Petitioner, connected to Wu's host units via other RTUs, meet all requirements of remote units in claim 11, and Figure 1 shows a plurality of such indirectly connected RTUs, disclosing the additional limitation of claim 19. The presence of additional RTUs, in the absence of any language excluding such additional remote devices in the claim, does not contradict Petitioner's showing that Wu discloses the claim limitation.

Based on the foregoing discussion and a review of the record, Petitioner shows by a preponderance of evidence that Wu anticipates claim 19, and that claim 19 would have been obvious over Wu.

5. Claims 18 and 20

Claim 18, dependent on claim 11, adds the further limitation that "the host unit is connected to each of the plurality of remote units through a direct connection." Claim 20, also dependent on claim 11, adds the limitation that "the host unit is connected to some of the plurality of remote units through a direct connection and others of the plurality of remote units through an indirect connection."

Petitioner persuasively argues that Wu discloses a plurality of remote units that are directly connected to a host unit, and a plurality that are connected via another RTU. Pet. 84–86, 88 (citing Ex. 1011, Figs. 1, 4, 5–1; Ex. 1003 ¶¶ 284–285, 287).

Patent Owner presents no additional arguments relating to these dependent claims. As discussed above, because of the open "comprising" language used in claim 11, the presence of additional remote units not included in the claimed "plurality of remote units" is not excluded. We agree with Petitioner that the remote units shown in Wu's Figure 1 disclose these claim limitations.

Based on the foregoing discussion and a review of the record, Petitioner shows by a preponderance of evidence that Wu anticipates claims 18 and 20, and that claims 18 and 20 would have been obvious over Wu.

6. Claim 21

Claim 21, dependent on claim 11, adds the further limitation that "each remote comprises at least one interface to communicatively couple the remote unit to another remote unit in a daisy-chain configuration." Petitioner persuasively argues that Wu's cascade configuration, in which some RTUs are not directly connected to a host unit, but rather are

connected via another RTU, discloses this configuration. Pet. 88 (citing Ex. 1011 ¶¶ 12, 51, Figs. 1, 4, 5–1; Ex. 1003 ¶ 288).

Patent Owner argues that the cascade configuration shown in Wu does not disclose the claimed daisy-chain configuration because in the cascade configuration there is no ability to send specific downlink signals to specific remotes. PO Resp. 58 (citing Ex. 1011 ¶¶ 12, 51; Ex. 2007 ¶¶ 35, 158); PO Sur-Reply 23–24; Tr. 58:5–59:4. Patent Owner argues that Wu's disclosed cascade configuration does not anticipate the claimed configuration because in it, a host unit will "forward all signals received by the host unit to all connected remote units." *Id.* Again, this argument is based on Patent Owner's argument that the claim must be construed to permit a downlink signal be transmitted to only a single remote unit, which we have rejected. *See supra* § II.C.2.

Based on the foregoing discussion and a review of the record, Petitioner shows by a preponderance of evidence that Wu anticipates claim 21, and that claim 21 would have been obvious over Wu.

E. Asserted Obviousness Based on Wu, or based on Wu and Sabat

Petitioner asserts claims 9, 10, and 14–17 would have been obvious over Wu alone, or over Wu and Sabat. Pet. 90–93. Patent Owner addresses these assertions in Patent Owner's Response. PO Resp. 35–36, 59–61.

1. Overview of Sabat

Sabat is titled "Digital Distributed Antenna System" and describes a system that distributes the capacity of a digital base station to solve coverage and capacity requirements. Ex. 1008, [54], [57]. Sabat includes a block schematic drawing of a system according to an embodiment of the invention in Figure 3, reproduced below.

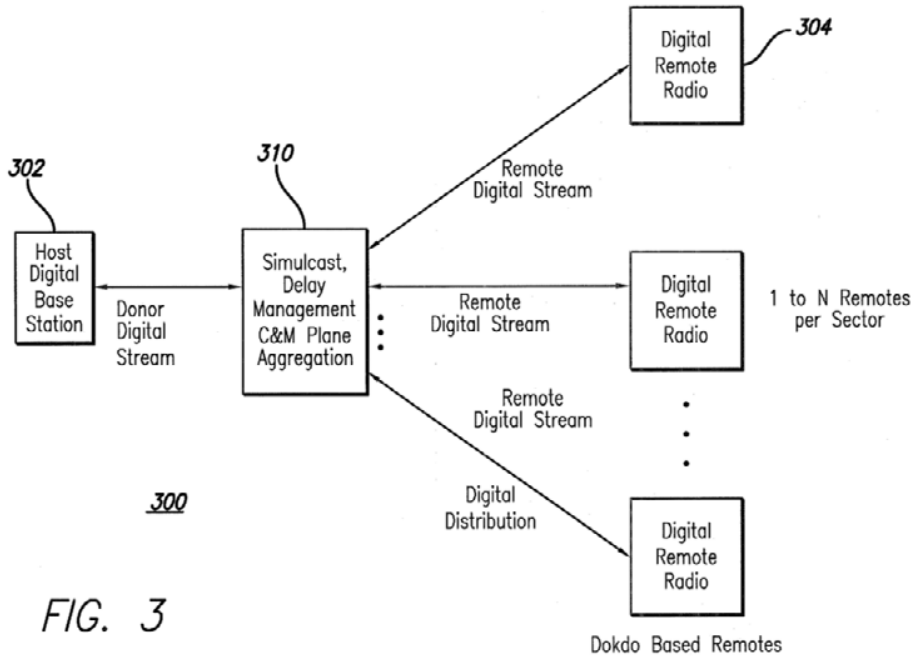

FIG. 3

Figure 3 of Sabat illustrates a DAS network which distributes downlink signals from base station 302 (labeled "Host Digital Base Station" in Fig. 3), to digital distributed radio (DDR) units 304 (each labeled "Digital Remote Radio") via DDR hub 310 (labeled "Simulcast, Delay Management C&M Plane Aggregation"). *Id.* ¶¶ 25, 30, 31, 33, 34. Sabat discloses that signals are also received from DDR units 304 and transmitted to base station 302. *Id.* ¶¶ 15, 16, 37.

Figure 6 of Sabat is reproduced immediately below:

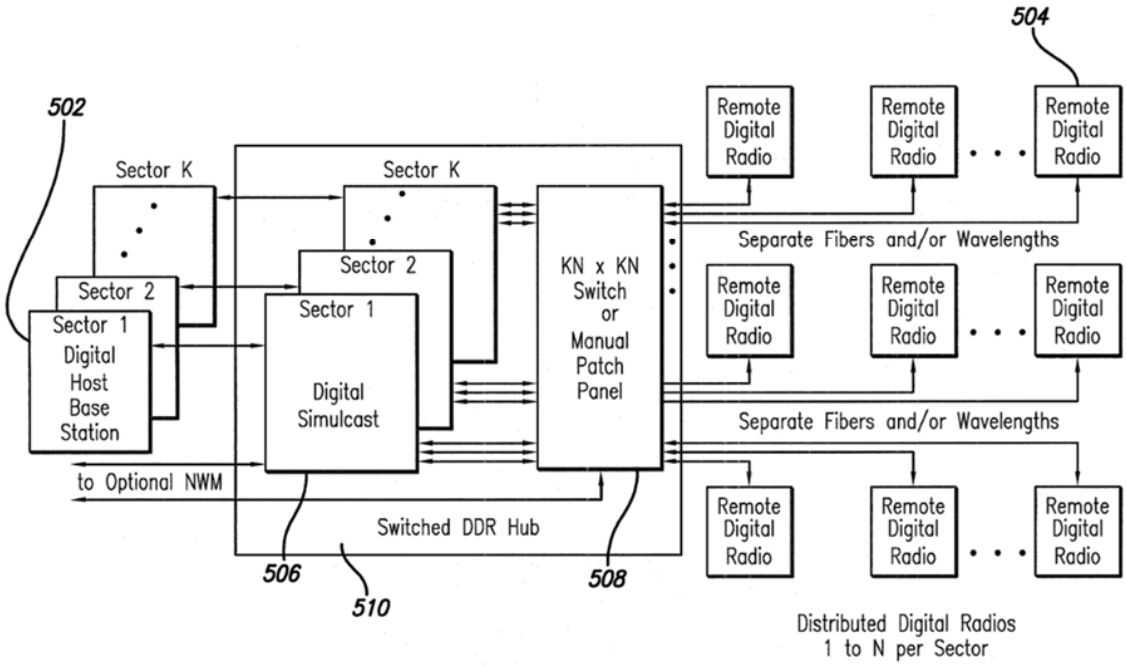

FIG. 6

Figure 6 is a block schematic drawing of a base station and a DDR hub, which includes a digital switch to provide capacity reallocation capability to the network. *Id.* ¶ 28. Figure 6 shows base station sectors 502 for sectors 1 through K, transmitting via DDR hub 510 to DDR units 504. *Id.* ¶¶ 27, 28, 43–46. Element 508 of DDR hub 510 is a manual patch panel or a fully-programmable electronic switch. *Id.* ¶¶ 46–47. In each case, the simulcast of downlink signals of base station sectors 502 to DDR units 504 can be reconfigured from an initial capacity allocation based on the best a priori information in case any sector becomes overloaded. *Id.* Sabat notes that, "[a]ny single DDR 504 can be connected to any base station sector 502 with the only constraint being the maximum simulcast per sector that is supported by the switched DDR Hub 510." *Id.* ¶ 46.

Sabat discloses that communications between the DDR hub 510 and the DDR units 504, and between DDR hub 510 and sectors 502 may be transmitted according to the CPRI standard. *Id.* ¶¶ 14, 31, 32, 34, 36–38, Claim 8.

2. Petitioner's Initial Showing

Petitioner asserts claims 9, 10, 14, and 16 would have been obvious over Wu, or over a combination of Wu and Sabat. Pet. 90–92. Claims 9, 10, 14, and 16 require that the host unit is "capable of packetizing each digital representation of an uplink signal," and in the case of claims 10 and 16, that the packetizing is "in compliance" with the CPRI standard.

Petitioner persuasively shows that, in light of Wu's disclosure of communication between a remote unit and host unit using CPRI, it would have been obvious to use CPRI to communicate upstream signals between the matrix switch and the base station. Pet. 90–91. Alternatively, Petitioner persuasively argues that it would have been obvious to modify Wu to use a digital CPRI link as taught by Sabat, between the matrix switch of Wu and the multiband transceiver 260. *Id*. at 90–91. Petitioner persuasively avers that Sabat's disclosure of the communication of upstream signals from the remote digital units to the base station using CPRI, discloses the host units capability to packetize each digital representation of an uplink signal. *Id*. at 42–43 (citing Ex. 1008 ¶¶ 14, 31–32, 36; Ex. 1003 ¶¶ 232–233; Ex. 1010).

Petitioner admits that the matrix switch of Wu "preferably" operates in the analog domain but asserts that this indicates a tacit acknowledgement that it could operate in the digital domain, and persuasively argues that if the matrix switch operated in the digital domain certain advantages would be realized, such as noise immunity and longer-distance transport. *Id*. at 91.

For the combination of Sabat with Wu, Petitioner persuasively shows that the configuration would enable the use of a simple digital matrix switch and capitalize on the known advantages of digital communications. *Id.* at 92 (citing Ex. 1003 ¶ 301).

3. Analysis of Parties' Positions

In the Institution Decision, with respect to obviousness over Wu, we noted that claims 9, 10, and 14–17 were not addressed in the anticipation argument, and wrote that "thus, on this record, we do not see a sufficient showing of obviousness over Wu for those claims." Inst. Dec. 39.

With respect to Sabat's teachings, we stated "[e]ven according to Petitioner's construction of packetizing (Pet. 12 ('making packets')), the use of CPRI by the hub to communicate with the base station(s) does not appear to be a complete argument with supporting evidence showing that the host unit is 'making packets' of information received by the remote digital units." Inst. Dec. 23. We also instituted review with respect to all grounds, and noted that our determination in the Institution Decision was not final. *Id.* at 40.

Patent Owner argues that "absent from Petitioner's argument is any evidence that Sabat's use of the CPRI standard includes creating packets." PO Resp. 35 (citing Ex. 2007 ¶ 90; Pet. 42–43). Patent Owner admits that "[o]n the uplink, Sabat states that the CPRI digital base station interface may be used," but argues that Sabat "instead describes" arithmetically summing uplink signals, which would not teach the required packetization or packetization in compliance with CPRI. *Id.* at 36 (citing Ex. 1008 ¶¶ 12, 36; Ex. 2007 ¶ 91). Patent Owner then concludes that "Sabat's DDR hub is sending an arithmetically summed signal, not a packet as required by the

claims." *Id.* Patent Owner argues that the communication of RF signals (as in Sabat, *see, e.g.*, Ex. 1008, [57], ¶¶ 3, 51) is performed as CPRI's IQ data, for which the CPRI standard does not describe addressing, leaving it to the application layer, which is beyond the scope of the CPRI standard. PO Sur-Reply 15–16 (citing Ex. 1010, 15, 26, 38, 84); Tr. 36:6–9, 36:14–22, 40:9–10. At oral argument, Patent Owner confirmed that its argument is that this uplink data from the remote units, if sent via CPRI, does not necessarily include source or destination information. Tr. 41:18–26.

Petitioner responds, echoing Patent Owner's admission, that "Sabat discloses that the DDR hub uses a specific digital base station interface to the digital base stations. That interface is the CPRI interface." Pet. Reply 10 (internal citations omitted) (citing Ex. 1008 ¶¶ 31–32; Ex. 1010). Petitioner cites the organization of incoming signals in the form of frames from the remote units which are sent over using a CPRI interface to show packetizing the transmission. *Id.* at 10–11.

Petitioner next argues that the use of the CPRI interface to transmit these organized signals from the host unit to a base station shows the creation of units of data to be sent over a network, as CPRI "defines a specific protocol for mapping and framing the IQ data into defined CPRI frames." *Id.* at 11 (citing Ex. 1047 ¶¶ 9–11, 19). Petitioner argues that the CPRI protocol discloses the use of destination addresses. *Id.* (citing Ex. 1047 ¶¶ 12–15, 20–22; Ex. 1010, 84).

Patent Owner responds that Petitioner conflates two portions of the CPRI standard that deal with different communications, and that the portion which relates to control and management messaging is the only one which explicitly teaches addressing. PO Sur-Reply 15–16. Patent Owner also

argues that the other portion deals with the type of messaging that would be used for RF signals, and that in this portion, the address table is handled by an application layer, whose functions are outside the scope of the CPRI standard. *Id.* at 16 (citing Ex. 1010, 15, 26–27, 38, 84).

As discussed previously, we agree with Patent Owner that "packetizing" requires addressing (*see supra* Section II.C.1). We determine that, using this construction, the record supports Petitioner's position. Sabat's teaching of communications between a host unit and a base station using CPRI, along with the CPRI specification's discussion of the use of destination addresses for certain data would have taught or suggested to one of ordinary skill in the art that the host unit would frame data being transmitted to the base station and address that data. *See* Ex. 1047 ¶¶ 12–15, 20–22; Ex. 1010, 84 (Sections 6.3.2–6.3.3); Ex. 2009, 63:16–65:10. CPRI discusses including addresses in control and management data, and that an application layer would provide address table information for RF signals. Ex. 1010, 84. We are persuaded that artisans of ordinary skill would have recognized that the CPRI standard provides for addresses. Even given Patent Owner's contention that the application layer is "beyond the scope of the CPRI standard" (PO Sur-Reply 16 (citing Ex. 1010, 38)), one of ordinary skill would have considered addressing of packets within the host unit, if not at the CPRI Release 1 or 2 layer, to be obvious, so that packets arrive at their intended destination.

Based on the foregoing discussion and a review of the record, Petitioner shows by a preponderance of evidence that claims 9, 10, 14, and 16 would have been obvious over a combination of Wu and Sabat.

For claims 15 and 17, which depend from claims 14 and 16 respectively, Patent Owner relies upon its arguments relating to claims 9, 10, 14, and 16, and upon its arguments, discussed *supra*, relating to daisy chaining. PO Resp. 61. Based on the foregoing discussion and a review of the record, Petitioner shows by a preponderance of evidence that the claims 15 and 17 would have been obvious over a combination of Wu and Sabat.

F. Other Asserted Grounds

For the reasons discussed above, we determine that Petitioner has shown by a preponderance of the evidence that all challenged claims are unpatentable based on Wu (claims 6–8, 11–13, and 18–21) and the Wu-Sabat combination (claims 9, 10, and 14–17). Accordingly, our decision is dispositive with respect to the challenged claims and we do not reach the additional issues of whether Petitioner has shown by a preponderance of the evidence that any of the claims are also unpatentable based on the additional grounds asserted in the Petition.

G. Petitioner's Motion to Exclude Certain Testimony of Dr. Acampora

Patent Owner filed a Motion to Exclude (Paper 43, "PO Mot. Excl."), Petitioner filed a Response (Paper 46, "Pet Resp. Excl."), and Patent Owner filed a Reply (Paper 47, "Pet. Reply Excl."). For the reasons discussed below, Patent Owner's Motion to Exclude is *dismissed-in-part and denied-in-part*.

Patent Owner argues that we should exclude Dr. Acampora's re-direct testimony during his deposition, and a supplemental declaration by Dr. Acampora (Ex. 1047) submitted with Petitioner's Reply. PO Mot. Excl. 1.

We have not relied on Dr. Acampora's re-direct in this Decision. Therefore, Patent Owner's Motion to Exclude is dismissed as moot with respect to Dr. Acampora's redirect testimony.

Patent Owner further argues that Dr. Acampora's supplemental declaration should be excluded, as it presents new invalidity theories and testimony, includes evidence inadmissible under the Federal Rules of Evidence, discusses legal standards or conclusions, and is new, belatedly presented evidence. PO Mot. Excl. 10–14.

With respect to the alleged inclusion of new theories and evidence, and to the supplemental declaration as new, belatedly presented evidence, we are not persuaded that the discussion of the CPRI document (Ex. 1010) explaining the combination of art asserted in the Petition is impermissible new evidence or argument. In its Response, Patent Owner contends the construction of "packetizing" requires source or destination information to be included with the data to be transmitted. PO Resp. 14–15. As Petitioner argues, Dr. Acampora's declaration relates to this construction, and to the consideration of the Petition's theories of unpatentability if we were to adopt it. Pet. Resp. Excl. 5–6. *See Belden Inc. v. Berk-Tek LLC*, 805 F.3d 1064, 1080–82 (Fed. Cir. 2015) (holding that rebuttal evidence may be appropriate when needed to explain, repel, counteract, or disprove an adversary's evidence); *see also Anacor Pharm., Inc. v. Iancu*, 889 F.3d 1372, 1380–81 (Fed. Cir. 2018) (holding that an IPR petitioner "may introduce new evidence after the petition stage" in some circumstances such as documenting knowledge skilled artisans would bring in interpreting the prior art); *see also* 37 C.F.R. § 42.23(b) (stating "reply may only respond to

arguments raised in the corresponding . . . patent owner response"). The Motion to Exclude is denied with respect to this subject matter.

To the extent Patent Owner argues that Dr. Acampora's supplemental declaration improperly includes assertions about positions taken in litigation (asserted to be inadmissible under Federal Rule of Evidence 602) or testimony regarding legal matters for which he has not been qualified as an expert (asserted to be inadmissible under Federal Rule of Evidence 702(a)), we have not relied upon these elements of Dr. Acampora's supplemental declaration, and thus the Motion to Exclude is moot with respect to these arguments. *See* PO Mot. Excl. 11. Patent Owner invokes other Federal Rules of Evidence, but sets forth no argument as to why the evidence should be excluded under the additional cited rules; accordingly, the Motion to Exclude is denied with respect to these arguments. *See id.*

III. CONCLUSION

Petitioner has shown by a preponderance of the evidence that claims 6–8, 11–13, and 18–21 of the '473 patent are unpatentable as anticipated by and obvious over Wu, and that claims 9, 10, and 14–17 of the '473 patent are unpatentable as obvious over Wu and Sabat.

We dismiss in part as moot and deny in part Petitioner's Motion to Exclude.

IV. ORDER

In consideration of the foregoing, it is hereby

ORDERED that claims 6–21 of the '310 patent are unpatentable;

FURTHER ORDERED that Petitioner's Motion to Exclude is dismissed in part as moot, and denied in part; and

FURTHER ORDERED that, because this is a Final Written Decision, parties to the proceeding seeking judicial review of the decision must comply with the notice and service requirements of 37 C.F.R. § 90.2.

PETITIONER:

Philip Caspers
Samuel Hamer
Matthew Goggin
CARLSON CASPERS VANDENBURGH
LINDQUIST & SCHUMAN
pcaspers@carlsoncaspers.com
shamer@carlsoncaspers.com
mgoggin@carlsoncaspers.com

PATENT OWNER:

Case L. Collard
Gina Cornelio
DORSEY & WHITNEY LLP
Collard.case@dorsey.com
Cornellio.gina@dorsey.com