Exhibit 1009

On the feasibility of 1Gbps for various MAC/PHY architectures

Date: 2008-03-17

Authors:

Name	Company	Address	Phone	email
Roberta Fracchia	Motorola	Parc les Algorithmes 91193 Gif sur Yvette France	+33 1 69354846	Roberta.Fracchia@motorola.com
Marc de Courville	Motorola			Marc.de.Courville@motorola.com
Stephanie Rouquette	Motorola			Stephanie.Rouquette@motorola.com

Ex. 1009 - TCL Indus Holdings Co., Ltd.
TCL Indus Holdings Co., Ltd v. LGE - IPR2023-00866
1 of 9

Abstract

This analysis provides inputs on the technical feasibility of achieving 1Gbps aggregated MAC SAP throughput for below 6GHz amendment, by using different MAC layers which manage the access to different parallel channels

Ex. 1009 - TCL Indus Holdings Co., Ltd.
TCL Indus Holdings Co., Ltd v. LGE - IPR2023-00866

802.11n MAC Throughput

- **Intel presentation 07/2431r0 shows that at least 160MHz BW for 4x4 MIMO are necessary to reach 1Gbps MAC throughput (corresponding to 2048 Mbps PHY rate)**

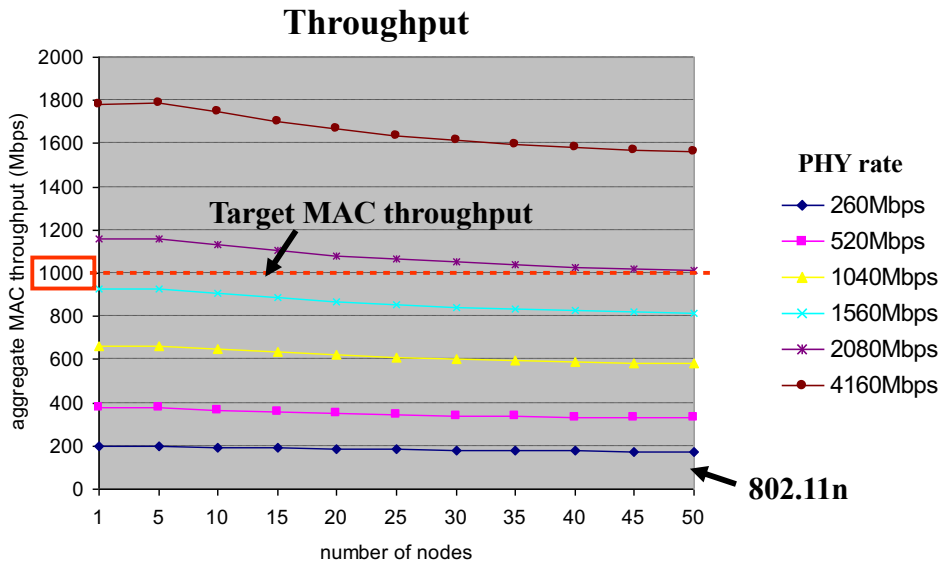

- **Considering a single channel, whose access is managed by a single MAC, the MAC efficiency is ~64% for 1Gbps PHY rate and ~40% for a PHY rate of 4Gbps (5 STAs)**

Ex. 1009 - TCL Indus Holdings Co., Ltd.
TCL Indus Holdings Co., Ltd v. LGE - IPR2023-00866

Multichannel CSMA

- **Performance can be improved by the use of multiple channels: multiple CSMA channels perform better with respect to a single-channel CSMA in case of fixed aggregated bandwidth**
- **Multi-channel CSMA protocols achieve higher performance than single channel ones since the MAC throughput doesn't scale linearly with the PHY throughput:**

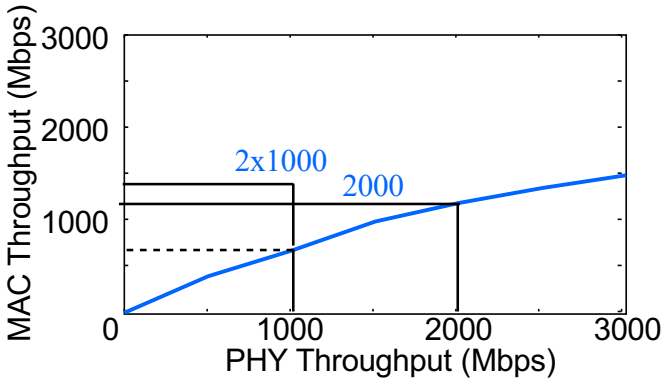

If the total bandwidth B is divided in N channels of bandwidth B_N=B/N, the maximum total MAC throughput is

Throughput_MultiCh (B) = N ·Throughput (B_N) > Throughput (B)

(As a first approximation PHY throughput for a given spectral efficiency scales linearly as a function of the bandwidth)

- **By allowing concurrent transmissions the number of collisions is also reduced, thus increasing the MAC throughput**

Ex. 1009 - TCL Indus Holdings Co., Ltd.
TCL Indus Holdings Co., Ltd v. LGE - IPR2023-00866

Maximum MAC throughput with multiple channels

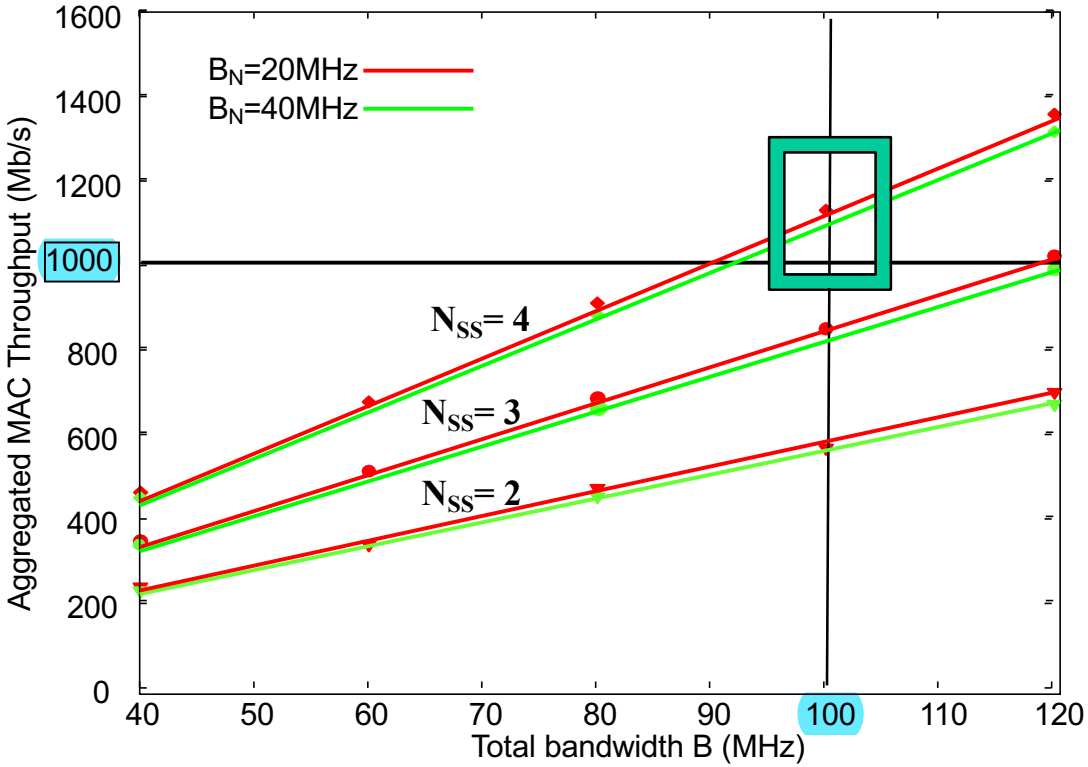

We evaluate the maximum throughput that can be achieved considering

- AMSDU
- TXOP=2ms
- Packet size = 1500B
- CW=15
- 64 QAM 5/6
- 3 users per channel

To reach 1Gbps throughput with 4 Spatial Streams: 100 MHz BW (with parallel channels) wrt 160 MHz BW (with a single channel) are required

Ex. 1009 - TCL Indus Holdings Co., Ltd.
TCL Indus Holdings Co., Ltd v. LGE - IPR2023-00866

Remarks

- **The finer the channel granularity, the higher the gain: 20 MHz channels are better than 40 MHz channels**
- **80 MHz BW:**
  - 900 Mbps throughput with N_{SS}=4
  - 650 Mbps throughput with N_{SS}=3
  - 450 Mbps throughput with N_{SS}=2
- **100 MHz BW:**
  - 1.1 Gbps throughput with N_{SS}=4
  - 850 Mbps throughput with N_{SS}=3
  - 550 Mbps throughput with N_{SS}=2
- **120 MHz BW:**
  - 1 Gbps throughput with N_{SS}=3
  - 650 Mbps throughput with N_{SS}=2

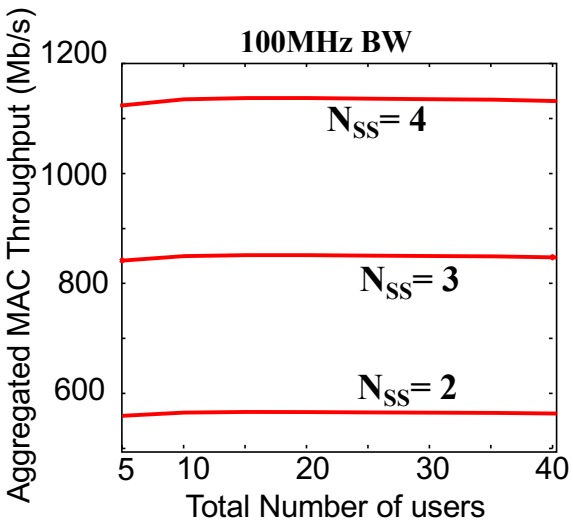

Ex. 1009 - TCL Indus Holdings Co., Ltd.
TCL Indus Holdings Co., Ltd v. LGE - IPR2023-00866

Architectural solutions for multiple CSMA (1/2)

We assume that the total bandwidth B is divided in N channels of bandwidth B_N=B/N

1. Each user has 1 radio, to access 1 of the N channels

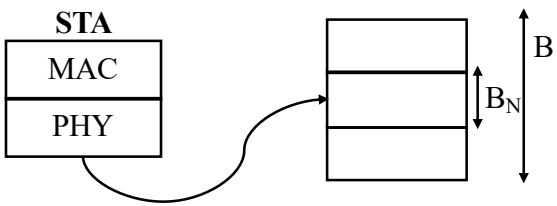

- One MAC/PHY for each user
- Many works in the literature proposing:
  - Channel hopping strategies
  - Synchronization and access methods
  - Use of a Control channel

2. Each user has N radios, one for each channel

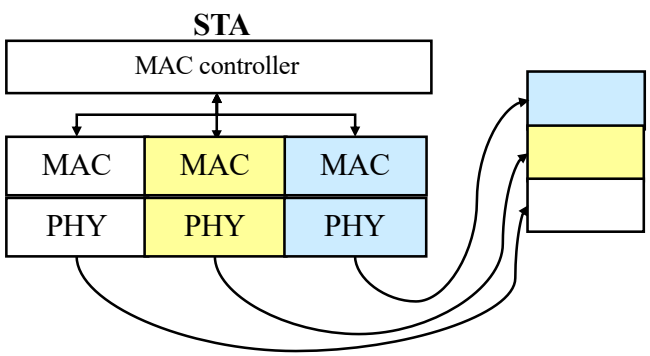

- **A Multi-Radio Unification Protocol for IEEE 802.11Wireless Networks,** A. Adya, P. Bahl, J. Padhye, A. Wolman, L. Zhou (Microsoft Research)
- The access to the N channels given by N multiple wireless network cards (multiple MAC/PHY layers), coordinated by a MAC controller which:
  - presents a single MAC SAP to layers above
  - monitors the channel quality on each interface
  - selects the interface to forward the packet on

Ex. 1009 - TCL Indus Holdings Co., Ltd.
TCL Indus Holdings Co., Ltd v. LGE - IPR2023-00866

Architectural solutions for multiple CSMA (2/2)

We assume that the total bandwidth B is divided in N channels of bandwidth B_N=B/N

3. Each user has multiple MACs but only one PHY layer

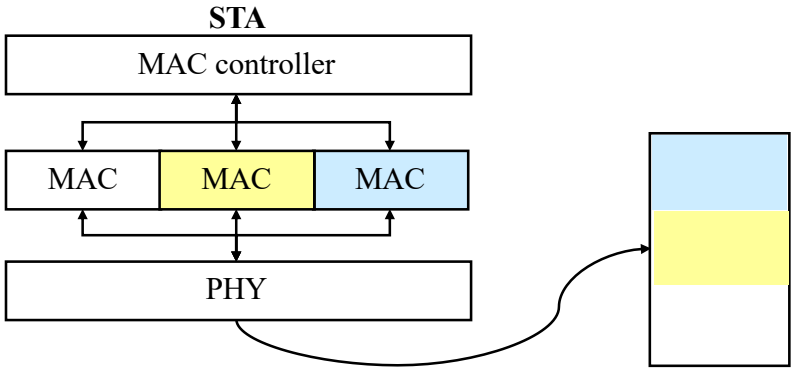

- **Multiple MACs, coordinated by a MAC controller, regulate the access to the N channels**
- **A single PHY layer uses the total bandwidth: a single FFT is done on the bandwidth B**
- **The use of different channels is allowed, with the same number of antennas used for a single channel bandwidth**

Ex. 1009 - TCL Indus Holdings Co., Ltd.
TCL Indus Holdings Co., Ltd v. LGE - IPR2023-00866

Conclusions

- Single channel bandwidth extension is not a suitable solution to match 1 Gbps throughput
- Parallel channels can highly improve the MAC throughput
- This stresses out the importance of introducing in VHT the support for multiple transmissions at the same time expanding on the multi-user dimension
- 1Gbps feasibility is provided with 100MHz BW for N_{SS}=4 (~40% of bandwidth gain compared to single channel)
- 800 Mbps feasibility is provided with 100MHz BW for N_{SS}=3
- 500 Mbps feasibility is provided with 100MHz BW for N_{SS}=2
- But opens up new challenges to define the most suitable architecture for the access to parallel channels

Ex. 1009 - TCL Indus Holdings Co., Ltd.
TCL Indus Holdings Co., Ltd v. LGE - IPR2023-00866