Exhibit 1015

US008705645B2

(12) **United States Patent**
**Sadowsky et al.**

(10) **Patent No.: US 8,705,645 B2**
(45) **Date of Patent: *Apr. 22, 2014**

(54) **MIMO TRANSMITTER AND METHOD FOR TRANSMITTING OFDM SYMBOLS**

(75) Inventors: **John S. Sadowsky**, Mesa, AZ (US); **Minnie Ho**, Los Altos, CA (US); **Sumeet Sandhu**, San Jose, CA (US); **Alexander A. Maltsev**, Nizhny Novgorod (RU); **Eric A. Jacobsen**, Scottsdale, AZ (US); **Ali S. Sadri**, San Diego, CA (US)

(73) Assignee: **Intel Corporation**, Santa Clara, CA (US)

( * ) Notice: Subject to any disclaimer, the term of this patent is extended or adjusted under 35 U.S.C. 154(b) by 10 days.

This patent is subject to a terminal disclaimer.

(21) Appl. No.: **13/489,595**

(22) Filed: **Jun. 6, 2012**

(65) **Prior Publication Data**

US 2012/0236911 A1 Sep. 20, 2012

**Related U.S. Application Data**

(63) Continuation of application No. 12/757,117, filed on Apr. 9, 2010, now Pat. No. 8,396,147, which is a continuation of application No. 12/118,838, filed on May 12, 2008, now Pat. No. 7,738,579, which is a continuation of application No. 10/750,587, filed on Dec. 29, 2003, now Pat. No. 7,394,858.

(60) Provisional application No. 60/493,937, filed on Aug. 8, 2003.

(51) **Int. Cl.**
***H04K 1/10*** (2006.01)
***H04L 27/28*** (2006.01)

(52) **U.S. Cl.**
USPC ..... **375/260**; 375/267; 375/347; 375/299; 375/343; 455/506; 455/65; 455/101; 455/137

(58) **Field of Classification Search**
USPC ..... 375/260, 267, 347, 299, 343, 349; 455/65, 101, 137, 506; 370/208
See application file for complete search history.

(56) **References Cited**

U.S. PATENT DOCUMENTS

6,377,631 B1 * 4/2002 Raleigh ..... 375/299
6,473,467 B1 * 10/2002 Wallace et al. ..... 375/267

(Continued)

FOREIGN PATENT DOCUMENTS

CN 1864360 B 3/2010
CN ZL201010251797.4 6/2012

(Continued)

OTHER PUBLICATIONS

"U.S. Appl. No. 10/750,587, Notice of Allowance mailed Mar. 17, 2008", 11 pgs.

(Continued)

*Primary Examiner* — Phuong Phu
(74) *Attorney, Agent, or Firm* — Schwegman, Lundberg & Woessner, P.A.

(57) **ABSTRACT**

An orthogonal-frequency division multiplexed (OFDM) transmitter is configured to transmit a data unit in accordance with a multiple-input multiple-output (MIMO) technique over a wideband channel comprising a 20 MHz channel and another channel using a plurality of spatially diverse antennas. The transmitter is further configured to include in the data unit, a parameter indicating a modulation and coding scheme and a parameter indicating number of spatial streams. Each of the spatial streams is encoded and beamformed for receipt by one or more different receiving stations.

**29 Claims, 4 Drawing Sheets**

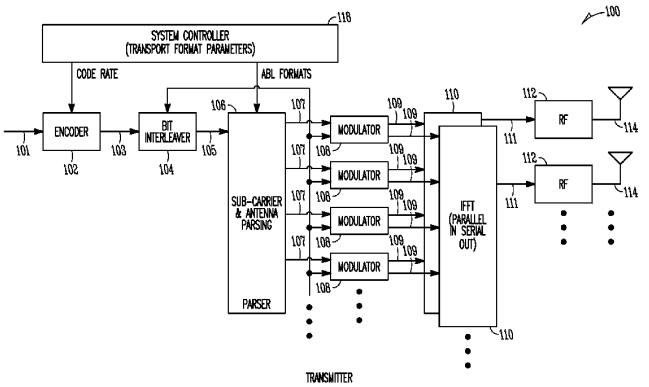

(56) **References Cited**

U.S. PATENT DOCUMENTS

| | | | | |
|---|---|---|---|---|
| 6,785,520 | B2 * | 8/2004 | Sugar et al. | 455/101 |
| 7,027,523 | B2 | 4/2006 | Jalali et al. | |
| 7,072,413 | B2 | 7/2006 | Walton et al. | |
| 7,072,523 | B2 | 7/2006 | Bolle et al. | |
| 7,154,936 | B2 | 12/2006 | Bjerke et al. | |
| 7,218,689 | B2 | 5/2007 | Gupta | |
| 7,394,858 | B2 * | 7/2008 | Sadowsky et al. | 375/260 |
| 7,639,600 | B1 | 12/2009 | Lou et al. | |
| 7,738,579 | B2 | 6/2010 | Sadowsky et al. | |
| 7,822,135 | B2 * | 10/2010 | Sadowsky et al. | 375/260 |
| 7,885,346 | B2 | 2/2011 | Sadowsky et al. | |
| 8,019,010 | B2 | 9/2011 | Sadowsky et al. | |
| 8,396,147 | B2 | 3/2013 | Sadowsky et al. | |
| 8,463,199 | B2 * | 6/2013 | Sugar et al. | 455/73 |
| 2002/0154705 | A1 | 10/2002 | Walton et al. | |
| 2003/0231715 | A1 | 12/2003 | Shoemake et al. | |
| 2004/0082356 | A1 | 4/2004 | Walton et al. | |
| 2004/0165558 | A1 | 8/2004 | Ling et al. | |
| 2004/0165676 | A1 | 8/2004 | Krishnan et al. | |
| 2004/0233918 | A1 | 11/2004 | Larsson et al. | |
| 2005/0147076 | A1 | 7/2005 | Sadowsky et al. | |
| 2006/0018411 | A1 | 1/2006 | Gore et al. | |
| 2008/0253471 | A1 | 10/2008 | Sadowsky et al. | |
| 2009/0245405 | A1 | 10/2009 | Sadowsky et al. | |
| 2009/0252257 | A1 | 10/2009 | Sadowsky et al. | |
| 2010/0195545 | A1 | 8/2010 | Sadowsky et al. | |
| 2011/0096856 | A1 | 4/2011 | Sadowsky et al. | |

FOREIGN PATENT DOCUMENTS

| | | | |
|---|---|---|---|
| CN | 103178884 | A | 6/2013 |
| CN | 101895509 | B | 7/2013 |
| JP | 11163823 | | 6/1999 |
| JP | 2001177497 | | 6/2001 |
| WO | WO-03001702 | A2 | 1/2003 |
| WO | WO-03034610 | A2 | 4/2003 |
| WO | WO-03047118 | A2 | 6/2003 |
| WO | WO-03049397 | A2 | 6/2003 |
| WO | WO-2005022681 | A2 | 3/2005 |
| WO | WO-2005022681 | A3 | 3/2005 |

OTHER PUBLICATIONS

"U.S. Appl. No. 10/750,587, Preliminary Amendment filed Aug. 6, 2004", 3 pgs.
"U.S. Appl. No. 10/750,587, Response filed Feb. 8, 2008 to Non-Final Office Action mailed Nov. 19, 2007", 15 pgs.
"U.S. Appl. No. 10/750,587, Non-Final Office action Action Mailed Nov. 19, 2007", 15.
"U.S. Appl. No. 12/118,838, Non Final Office Action mailed Aug. 3, 2009", 13 pgs.
"U.S. Appl. No. 12/118,838, Notice of Allowance mailed Jan. 28, 2010", 7 pgs.
"U.S. Appl. No. 12/118,838, Preliminary Amendment filed Aug. 12, 2009", 5 pgs.
"U.S. Appl. No. 12/118,838, Response filed Nov. 2, 2009 to Non Final Office Action mailed Aug. 3, 2009", 8 pgs.
"U.S. Appl. No. 12/118,838, Supplemental Notice of Allowability Mailed Feb. 18, 2010", 3.
"U.S. Appl. No. 12/118,838, Supplemental Notice of Allowability Mailed May 6, 2010", 4 pages.
"U.S. Appl. No. 12/482,671 Ex Parte Quayle Office Action mailed Mar. 26, 2010", 5 pgs.
"U.S. Appl. No. 12/482,671 Supplemental Notice of Allowability Mailed Sep. 23, 2010", 3 pages.
"U.S. Appl. No. 12/482,671, Notice of Allowance mailed Jun. 17, 2010", 7.
"U.S. Appl. No. 12/482,689 Notice of Allowance mailed Oct. 1, 2010", 7 Pgs.
"U.S. Appl. No. 12/482,689, Non-Final Office Action mailed May 25, 2010", 10 pgs.
"U.S. Appl. No. 12/482,689, Response filed Aug. 29, 2010 to Non Final Office Action mailed May 25, 2010", 8 pgs.
"U.S. Appl. No. 12/757,117, Amendment filed Jul. 27, 2011", 9 pgs.
"U.S. Appl. No. 12/982,161, Notice of Allowance mailed May 13, 2011", 9 pgs.
"Application Serial No. 200480029297.9 Office Action Mailed Oct. 30, 2009", 14 pgs.
"Chinese Application Serial No. 200480029297.9, Office Action mailed Feb. 27, 2009", 22 pgs.
"Chinese Application Serial No. 201010251797.4, Office Action Response filed Oct. 10, 2011", With English Translation, 45 pgs.
"Chinese Application Serial No. 201010251809.3, Office Action mailed May 14, 2012", With English Translation, 12 pgs.
"Chinese Application Serial No. 201010251809.3, Office Action mailed Sep. 28, 2011", 9 pgs.
"Chinese Application Serial No. 201010251809.3, Office Action mailed Dec. 31, 2011", 26 pgs.
"Chinese Application Serial No. 201010251809.3, Office Action Response filed May 15, 2012", 15 pgs.
"Chinese Application Serial No. 201010251809.3, Response filed Dec. 12, 2011 to Office Action mailed Sep. 28, 2011", 32 pgs.
"Chinese Application Serial No. 201010251809.3, Response filed May 16, 2011 to Office Action mailed Feb. 1, 2011", 18 pgs.
"Chinese Application Serial No. 201010251797.4, Office Action mailed May 20, 2011", 4.
"Chinese Application Serial No. 201010251809.3, Office Action mailed Feb. 1, 2011", 6 pgs.
"International Application Serial No. PCT/US2004/025509, International Search Report mailed Mar. 29, 2005", 3 pgs.
"Japanese Application Serial No. 2006-523250, Office Action mailed Aug. 16, 2008", 12 pgs.
"Japanese Application Serial No. P2006-523250, Office Action mailed Mar. 30, 2009", 4 pgs.
"Space-Time-Frequency COFDM with Power Allocation for Broadband Wireless Communications", IEEE Vehicular Technology Conference, (Sep. 24, 2002), 209-213.
Bangerter, B., et al., "High-Throughput Wireless LAN Air Interface", Intel Technology Journal, 7(3), http://developer.intel.com/technology/itj/index.htm, (Aug. 9, 2003), 47-57.
Guillaud, M., et al., "Multi-Stream Coding for MIMO OFDM Systems with Space-Time-Frequency Spreading", International Symposium on Wireless Personal Multimedia Communications, (Oct. 27, 2002), 120-124.
Rende, D., et al., "Bit Interleaved Space-frequency Coded Modulation for OFDM Systems", IEE International Conference on Communication, vol. 1 of 5, Wireless Information and Networking Group, ICC 2003, (May 15, 2003), 2827-2831.
Rende, D., et al., "Bit Interleaved Space-Frequency Coded Modulation for OFDM Systems", IEEE International Conference on Communcations, (May 11, 2003), 2827-2831.
Torabi, M., et al., "Performance Evaluation of Space-Frequency Coded OFDM Systems Over Frequency Selective Fading Channels", Canadian Conference on Electrical and Computer Engineering, (May 4, 2003), 1699-1702.
Torabi, M., et al., "Space-Time-Frequency COFDM with Power Allocation for Broadband Wireless Communications", IEEE Vehicular Technology Conference, Electrical & Computer Deptt., (Sep. 24, 2002), 209-213.
"U.S. Appl. No. 12/757,117, Non Final Office Action mailed Jul. 23, 2012", 10 pgs.
"U.S. Appl. No. 12/757,117, Notice of Allowance mailed Nov. 9, 2012", 9 pgs.
"U.S. Appl. No. 12/757,117, Response filed Oct. 11, 2012 to Non Final Office Action mailed Jul. 23, 2012", 6 pgs.
"Chinese Application Serial No. 201010251809.3, Office Action mailed Dec. 7, 2012", 33 pgs.

* cited by examiner

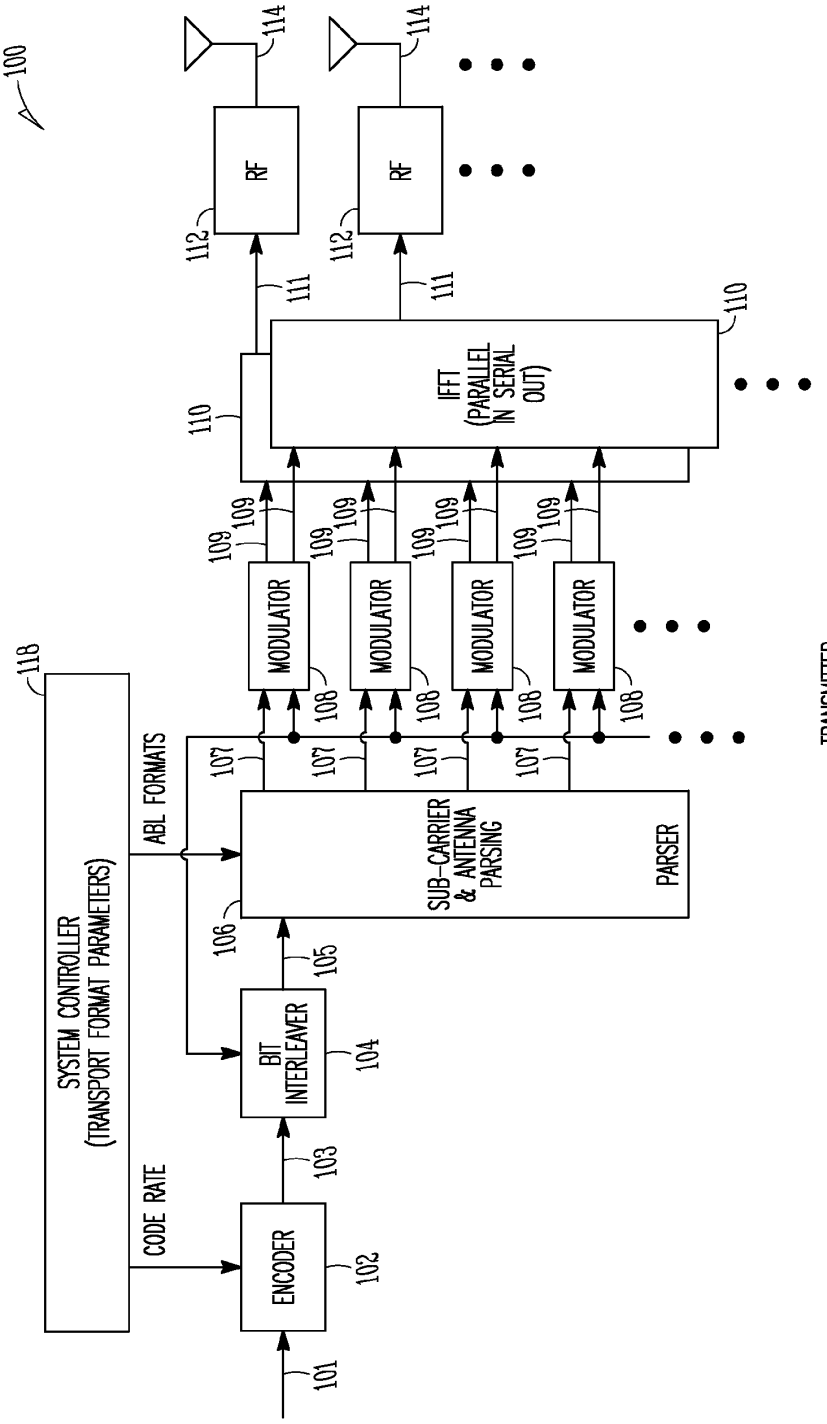


TRANSMITTER

*FIG. 1*

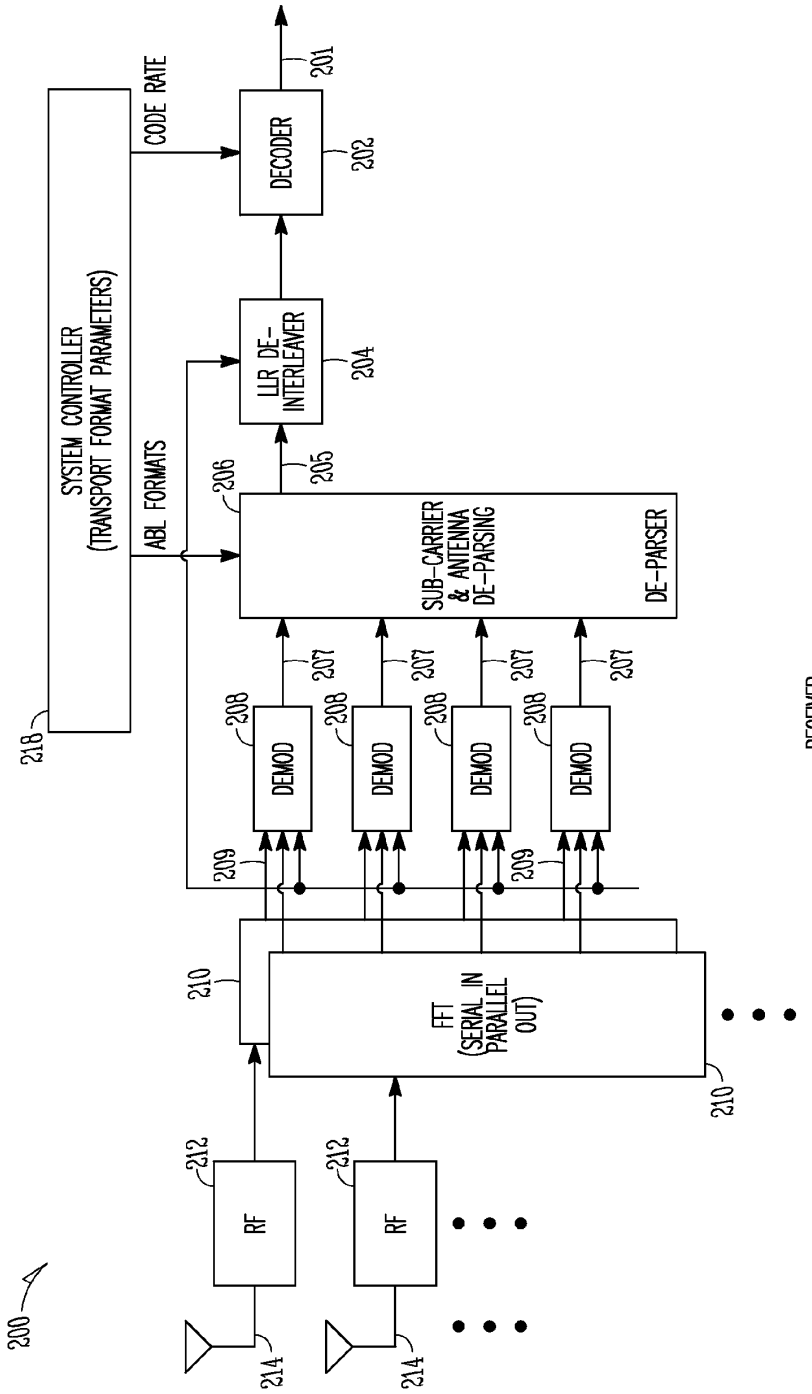


RECEIVER

*FIG. 2*

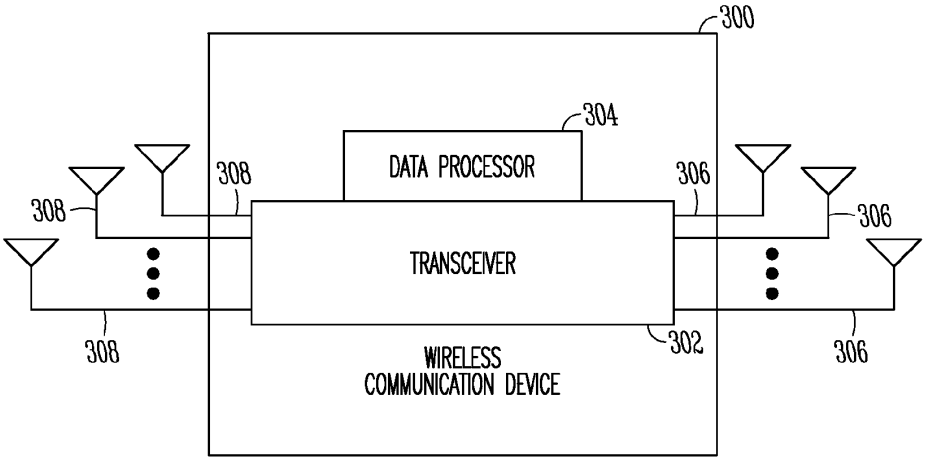
300
304
DATA PROCESSOR
308
306
308
306
TRANSCEIVER
308
302
306
WIRELESS
COMMUNICATION DEVICE

*FIG. 3*

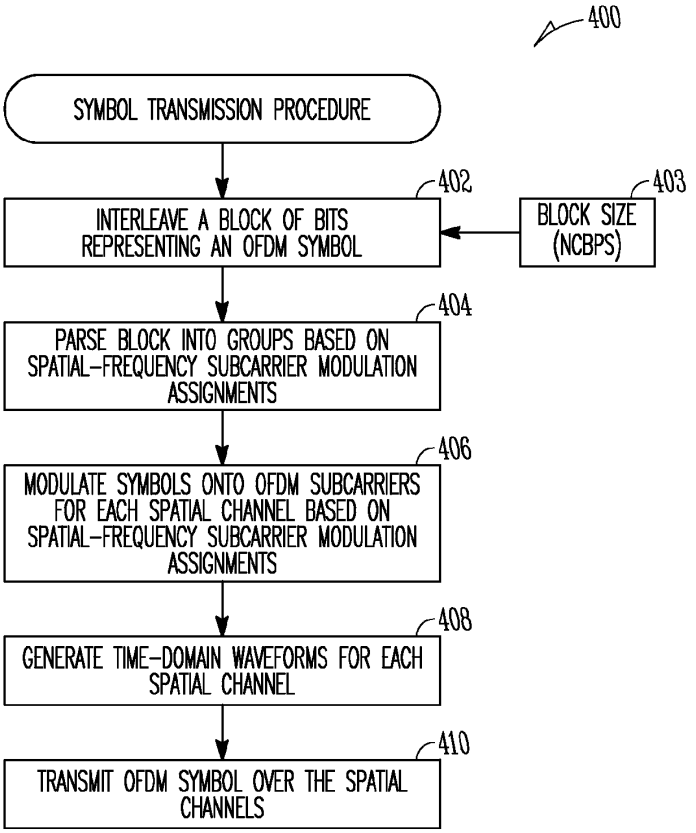
400
SYMBOL TRANSMISSION PROCEDURE
402
INTERLEAVE A BLOCK OF BITS REPRESENTING AN OFDM SYMBOL
403
BLOCK SIZE (NCBPS)
404
PARSE BLOCK INTO GROUPS BASED ON SPATIAL-FREQUENCY SUBCARRIER MODULATION ASSIGNMENTS
406
MODULATE SYMBOLS ONTO OFDM SUBCARRIERS FOR EACH SPATIAL CHANNEL BASED ON SPATIAL-FREQUENCY SUBCARRIER MODULATION ASSIGNMENTS
408
GENERATE TIME-DOMAIN WAVEFORMS FOR EACH SPATIAL CHANNEL
410
TRANSMIT OFDM SYMBOL OVER THE SPATIAL CHANNELS

*FIG. 4*

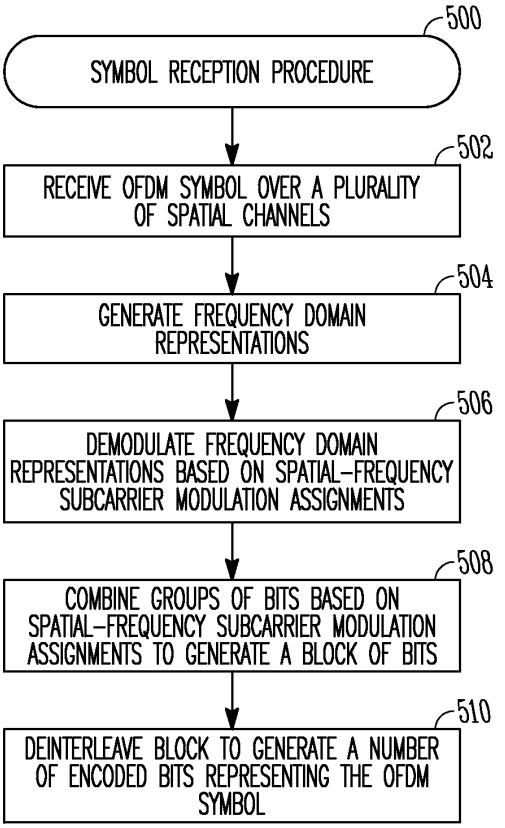
500
SYMBOL RECEPTION PROCEDURE
502
RECEIVE OFDM SYMBOL OVER A PLURALITY OF SPATIAL CHANNELS
504
GENERATE FREQUENCY DOMAIN REPRESENTATIONS
506
DEMODULATE FREQUENCY DOMAIN REPRESENTATIONS BASED ON SPATIAL-FREQUENCY SUBCARRIER MODULATION ASSIGNMENTS
508
COMBINE GROUPS OF BITS BASED ON SPATIAL-FREQUENCY SUBCARRIER MODULATION ASSIGNMENTS TO GENERATE A BLOCK OF BITS
510
DEINTERLEAVE BLOCK TO GENERATE A NUMBER OF ENCODED BITS REPRESENTING THE OFDM SYMBOL

*FIG. 5*

# MIMO TRANSMITTER AND METHOD FOR TRANSMITTING OFDM SYMBOLS

## RELATED APPLICATIONS

This application is a continuation of U.S. patent application Ser. No. 12/757,117, filed on Apr. 9, 2010, now issued as U.S. Pat. No. 8,396,147, which is a continuation of U.S. patent application Ser. No. 12/118,838, filed on May 12, 2008, now issued as U.S. Pat. No. 7,738,579, which is a continuation of U.S. patent application Ser. No. 10/750,587, filed on Dec. 29, 2003, now issued as U.S. Pat. No. 7,394,858, which claims the benefit of U.S. Provisional Patent Application Ser. No. 60/493,937, filed on Aug. 8, 2003, all of which are incorporated herein by reference in their entireties.

## TECHNICAL FIELD

Embodiments of the present invention pertain to wireless communications. In some embodiments, the present invention pertains to orthogonal frequency division multiplexed communications, and in some embodiments, the present invention pertains to wireless local area networks.

## BACKGROUND

The data rate of many conventional orthogonal frequency division multiplexed (OFDM) systems is limited by a maximum modulation order (e.g., bits per symbol) that may be effectively communicated on the symbol-modulated subcarriers of an OFDM channel. Thus, there are general needs for apparatus and methods for communicating additional data without an increase in frequency bandwidth.

## BRIEF DESCRIPTION OF THE DRAWINGS

The appended claims are directed to some of the various embodiments of the present invention. However, the detailed description presents a more complete understanding of embodiments of the present invention when considered in connection with the figures, wherein like reference numbers refer to similar items throughout the figures and:

FIG. **1** is a block diagram of a transmitter in accordance with some embodiments of the present invention;

FIG. **2** is a block diagram of a receiver in accordance with some embodiments of the present invention;

FIG. **3** is a block diagram of a wireless communication device in accordance with some embodiments of the present invention;

FIG. **4** is a flow chart of an OFDM symbol transmission procedure in accordance with some embodiments of the present invention; and

FIG. **5** is a flow chart of an OFDM symbol reception procedure in accordance with some embodiments of the present invention.

## DETAILED DESCRIPTION

The following description and the drawings illustrate specific embodiments of the invention sufficiently to enable those skilled in the art to practice them. Other embodiments may incorporate structural, logical, electrical, process, and other changes. Examples merely typify possible variations. Individual components and functions are optional unless explicitly required, and the sequence of operations may vary. Portions and features of some embodiments may be included in or substituted for those of others. The scope of embodiments of the invention encompasses the full ambit of the claims and all available equivalents of those claims. Such embodiments of the invention may be referred to, individually or collectively, herein by the term "invention" merely for convenience and without intending to voluntarily limit the scope of this application to any single invention or inventive concept if more than one is in fact disclosed.



FIG. **1** is a block diagram of a transmitter in accordance with some embodiments of the present invention. Transmitter **100** may be part of a wireless communication device, and may transmit orthogonal frequency division multiplexed (e.g., OFDM) communication signals. Transmitter **100** may transmit an OFDM symbol on a communication channel within a predetermined frequency spectrum. The channels may comprise a plurality of orthogonal subcarriers. In some embodiments, the orthogonal subcarriers of a channel may be closely spaced OFDM subcarriers. To achieve orthogonality between the closely spaced subcarriers, the subcarriers of a particular channel may have null at substantially a center frequency of the other subcarriers of that channel.

In some embodiments, transmitter **100** may utilize more than one of spatially-diverse antennas **114** to "divide" the channel into one or more spatial channels. In some embodiments, each transmit antenna **114** may define one spatial channel. In other embodiments, beamforming may be used to "divide" the channel into spatial channels. In these embodiments, each spatial channel may be used to communicate separate or independent data streams on the same subcarriers as the other spatial channels, allowing the communication of additional data without an increase in frequency bandwidth. The use of spatial channels may take advantage of the multipath characteristics of the channel. In some embodiments, the spatial channels may be non-orthogonal channels, although the scope of the invention is not limited in this respect.

In accordance with some embodiments, transmitter **100** may individually symbol-modulate the subcarriers of each spatial channel in accordance with individual subcarrier modulation assignments. This may be referred to as adaptive bit loading (ABL). Accordingly, one or more bits may be represented by a symbol-modulated on a subcarrier. The modulation assignments for each spatial channel may be based on the channel characteristics or channel conditions for that spatial channel, although the scope of the invention is not limited in this respect. In some embodiments, these spatial-frequency subcarrier modulation assignments may range from zero bits per symbol to up to ten or more bits per symbol. In terms of modulation levels, the spatial-frequency subcarrier modulation assignments may comprise binary phase shift keying (BPSK), which communicates one bit per symbol, quadrature phase shift keying (QPSK), which communicates two bits per symbol, 8PSK, which communicates three bits per symbol, 16-quadrature amplitude modulation (16-QAM), which communicates four bits per symbol, 32-QAM, which communicates five bits per symbol, 64-QAM, which communicates six bits per symbol, 128-QAM, which communicates seven bits per symbol, and 256-QAM, which communicates eight bits per symbol. Subcarrier modulation assignments with higher data communication rates per subcarrier (e.g., ten bits) may also be used.

An OFDM symbol may be viewed as the combination of the symbols modulated on the individual subcarriers of all the spatial channels. Because of the variable number of bits per symbol-modulated subcarrier and the variable number of spatial channels that may be used, the number of bits per OFDM symbol may vary greatly. For example, when four transmit antennas are used to provide four spatial channels, when each spatial channel uses up to 48 OFDM data subcarriers, and

when each subcarrier has a spatial-frequency subcarrier modulation assignment ranging between zero and six bits per symbol, the number of bits per OFDM symbol may range up to 1152 bits (4 spatial channels×48 data subcarriers per spatial channel×6 bits per symbol), depending on the channel conditions of the spatial channels, among other things.

In accordance with some embodiments, data for transmission over the spatial channels is provided to transmitter **100** in the form of bit stream **101**. Encoder **102** may apply forward error correcting (FEC) codes to bit stream **101** to generate coded bits comprising bit stream **103**. Bit interleaver **104** may perform an interleaving operation on a block of bits to generate interleaved block of bits **105**. Block of bits **105** may represent an OFDM symbol. Parser **106** may parse block of bits **105** into groups of bits **107** having a variable number of coded bits. The variable number of coded bits of a group may be determined by the spatial-frequency subcarrier modulation assignments associated with a particular subcarrier of a particular spatial channel. Subcarrier modulators **108** may individually modulate the groups of bits **107** on corresponding OFDM subcarriers for each spatial channel in accordance with the spatial-frequency subcarrier modulation assignments to generate symbol-modulated subcarriers **109**. In some embodiments, parser **106** may include a serial-to-parallel conversion to provide the groups of bits in a parallel form to subcarrier modulators **108**.

In some embodiments, symbol-modulated subcarriers **109** may comprise a symbol-modulated subcarrier for each subcarrier of a spatial channel. An OFDM symbol may be represented by the combination of all symbol-modulated subcarriers **109**. In some of these embodiments, a plurality of individual subcarrier modulators **108** (e.g., one for each subcarrier) may each separately modulate an individual OFDM subcarrier. In these embodiments, each one of subcarrier modulators **108** may modulate symbols for the same frequency subcarrier of the different spatial channels.

Inverse Fast Fourier transform (IFFT) circuitry **110** may perform IFFTs on symbol-modulated subcarriers **109** to generate time domain representations of the OFDM symbol. Almost any form of inverse discrete Fourier transform (IDFT) may be used to perform the inverse transform operation. The number of time domain samples generated by IFFT circuitry **110** may be equal to the number of frequency components input thereto. In some embodiments, IFFT circuitry **110** may generate a time domain waveform for each spatial channel from the combination of symbol-modulated subcarriers **109** for that spatial channel.

IFFT circuitry **110** may also convert the time domain samples generated by the IFFT operation, which may be in a parallel form, to one or more serial symbol streams **111**. IFFT circuitry **110** may also add a cyclic extension (or guard interval) to reduce inter-symbol interference in the channel. In some embodiments, the number of serial symbol streams **111** generated by IFFT circuitry may correspond to the number of spatial channels, although the scope of the invention is not limited in this respect. Radio frequency (RF) circuitry **112** may prepare each of serial symbol streams **111** for RF transmission over a corresponding one of the spatial channels.

In some embodiments, each of spatially diverse antennas **114** may be associated with a spatial channel and may receive RF signals from an associated one of RF circuitry **112**. Spatially diverse antennas **114** may be separated by a distance. A minimum separation distance may be based on the wavelength of the frequency spectrum used for communicating. In some embodiments, a separation of a few centimeters may be sufficient to help assure multipath differences between the spatial channels. Antennas **114** may comprise one or more directional or omnidirectional antennas, including, for example, dipole antennas, monopole antennas, loop antennas, microstrip antennas or other types of antennas suitable for transmission of RF signals by transmitter **100**.

In some embodiments, the spatial-frequency subcarrier modulation assignments may be based on channel conditions, such as a signal to interference and noise ratio (SINR) for the particular subcarrier in a particular spatial channel. In some embodiments, the spatial-frequency subcarrier modulation assignments may be determined and provided by a receiving station, although the scope of the invention is not limited in this respect. In some embodiments, higher subcarrier modulation assignments (e.g., more bits per symbol) may be used for subcarriers having better SINRs.

In some embodiments, bit interleaver **104** may input a variable number of coded bits of bit stream **103** into an interleaver matrix of interleaver **104**. In some embodiments, the variable number of coded bits may comprise one OFDM symbol and may comprise the number of coded bits per OFDM symbol (Ncbps). In some embodiments, system controller **118** may calculate the variable number of coded bits per OFDM symbol based on the spatial-frequency subcarrier modulation assignments for the subcarriers for each spatial channel. In some embodiments, the number of coded bits per OFDM symbol (Ncbps) may be provided by system controller **118** to bit interleaver **104**.

In some embodiments, system controller **118** may generate and provide transport format parameters to one or more other elements of transmitter **100** as illustrated. The transport format parameters may include the spatial-frequency subcarrier modulation assignments as well as the number of coded bits per OFDM symbol. The transport format parameters may also include other information to specify how the OFDM symbol is to be modulated. In some embodiments, the transport format parameters may include, in addition to the number of coded bits per OFDM symbol, the number of bits to be modulated on each spatial stream. In some embodiments, interleaver **104** may also be provided the subcarrier modulation assignments, although the scope of the invention is not limited in this respect.

In some embodiments, parser **106** may parse a block of bits representing an OFDM symbol into groups having a variable number of coded bits, and subcarrier modulators **108** may individually modulate the groups of bits on OFDM subcarriers in accordance with the spatial-frequency subcarrier modulation assignments to generate symbol-modulated subcarriers **109**. IFFT circuitry **110** may generate time domain waveforms from the symbol-modulated subcarriers for subsequent RF transmission over the spatial channels. In these embodiments, the number of groups of bits may be equal to a number of spatial channels multiplied by a number of the OFDM subcarriers of the channel.

In some embodiments, transmitter **100** may include an RF chain for each spatial channel. The RF chain may comprise one of RF circuitry **112** and an associated one of IFFT circuitry **110** for each spatial channel. Although one of antennas **114** is illustrated for each RF chain, this is not a requirement. Modulators **108**, on the other hand, may be associated with particular subcarriers rather than spatial channels so that any one modulator may modulate corresponding subcarriers (i.e., of the same subcarrier frequency) of each of the spatial channels. For each subcarrier, multiple symbols may be processed by one of modulators **108**.

In some embodiments, where there are N OFDM subcarriers and M spatial channels, parser **106** may provide N×M groups of bits. In some embodiments, N and M may be positive integers less than 100. In some example embodi-

ments in which there are forty-eight data subcarriers and ten spatial channels, there may be up to 480 groups of bits. Each group of bits, for example, may have up to six bits each when a maximum modulation of 64 QAM is used, although the scope of the present invention is not limited in this respect.

In some embodiments, parser **106** may be a spatial-frequency parser to parse a block of bits of a variable size into spatial-frequency groups of bits. Each spatial-frequency group may be associated with a spatial channel and a subcarrier frequency of the associated spatial channel.

In some embodiments, the functions of interleaver **104** and parser **106** may be performed in a different order than described above. For example, the parsing may be performed before interleaving, although the scope of the invention is not limited in this respect. In these embodiments, a symbol interleaver may be used after parsing. In some embodiments, interleaving may be performed separately for each spatial channel, although the scope of the invention is not limited in this respect. In some embodiments, encoder **102** may use a code, such as a low-density parity check code (LDPC) that does not always require an interleaving operation.

In some embodiments, transmitter **100** may comprise a spatial-frequency interleaver. In these embodiments, the functions of interleaver **104** and parser **106** may be combined into the spatial-frequency interleaver. In these embodiments, interleaving may be performed before, during or after parsing, and may be performed on any groups of bits to help assure that adjacent bits are separated by at least two subcarriers.

In some embodiments, transmitter **100** may transmit an OFDM symbol on a wideband communication channel. The wideband channel may comprise one or more subchannels. The subchannels may be frequency-division multiplexed (i.e., separated in frequency) and may be within a predetermined frequency spectrum. The subchannels may include more than one spatial channel and the spatial channels of a particular subchannel may use the same set of orthogonal subcarriers. In some embodiments, a wideband channel may comprise up to four or more subchannels, and each subchannel may have up to forty-eight or more orthogonal data subcarriers. Each subchannel may have a number of spatial channels determined by the number of RF chains. In some of these embodiments, the subchannels may have bandwidths of approximately 20 MHz, and each OFDM subcarrier of each spatial channel of a subchannel may be assigned an individual spatial-frequency subcarrier modulation assignment between zero and ten or more bits per symbol. In these embodiments, transmitter **100** may transmit the OFDM symbol over the spatial channels of the subchannels that comprise the wideband channel. Subchannels with greater or lesser bandwidths may also be suitable.

In some embodiments, the frequency spectrums for a channel may comprise either a 5 GHz frequency spectrum or a 2.4 GHz frequency spectrum. In these embodiments, the 5 GHz frequency spectrum may include frequencies ranging from approximately 4.9 to 5.9 GHz, and the 2.4 GHz spectrum may include frequencies ranging from approximately 2.3 to 2.5 GHz, although the scope of the invention is not limited in this respect, as other frequency spectrums are also equally suitable.

FIG. **2** is a block diagram of a receiver in accordance with some embodiments of the present invention. Receiver **200** may be part of a wireless communication device and may receive OFDM communication signals over an OFDM channel having more than one spatial channel. The OFDM signals may have been transmitted in accordance with ABL scheme which employs an individual spatial-frequency subcarrier modulation assignment for each subcarrier of each spatial channel. Transmitter **100** (FIG. **1**) is an example of a transmitter that may transmit suitable OFDM symbols, although other transmitters may also be suitable.

Receiver **200** may comprise one or more of spatially diverse antennas **214** and RF circuitry **212** to receive an OFDM symbol over a plurality of spatial channels. Receiver **200** may also comprise fast Fourier transform (FFT) circuitry **210** to generate frequency domain representations **209** of the OFDM symbol received over the OFDM subcarriers. Receiver **200** may also comprise subcarrier demodulators **208** to demodulate frequency domain representations **209** for each subcarrier from each of the spatial channels in accordance with the spatial-frequency subcarrier modulation assignments to generate groups of bits **207**. Receiver **200** may also comprise deparser **206** to combine groups of bits **207** to generate blocks of coded bits **205** representing the OFDM symbol. Deinterleaver **204** may perform a deinterleaving operation on block of coded bits **205** and decoder **202** may decode the blocks of bits to generate decoded bit sequence **201**.

In some embodiments, receiver **200** may include an RF chain for each spatial channel. The RF chain may comprise one of RF circuitry **212** and an associated one of FFT circuitry **210** for each spatial channel. In some embodiments, antennas **214** may be spatially diverse antennas and each may be associated with a spatial channel. Although one of antennas **214** is illustrated for each RF chain, this is not a requirement. Demodulators **208**, on the other hand, may be associated with particular subcarriers rather than spatial channels so that any one demodulator may demodulate corresponding subcarriers (of the same subcarrier frequency) of each of the spatial channels. For each subcarrier, multiple symbols may be processed by one of demodulators **208**.

Demodulators **208** may be implemented in various ways. In some embodiments, demodulators **208** may be implemented with a minimum mean square error (MMSE) receiver. In other embodiments, demodulators **208** may be implemented with a successive interference cancellation algorithm. In yet other embodiments, demodulators **208** may be implemented or with maximum likelihood (ML) demodulators, or soft-output ML-like demodulators (such as difference-min-difference demodulation) with either full or reduced search space algorithms such as sphere decoding. In some embodiments, demodulators **208** may deliver soft bit level log-likelihood ratios (LLRs) that may be subsequently de-interleaved and delivered to decoder **202**, although the scope of the present invention is not limited in these respects.

In some embodiments, receiver **200** may provide spatial-frequency subcarrier modulation assignments to a transmitting station for use in transmitting OFDM symbols to receiver **200**. In these embodiments, receiver **200** may further comprise a subcarrier modulation assignment generator to determine the spatial-frequency subcarrier modulation assignments based on channel characteristics for each of the orthogonal frequency division multiplexed subcarriers associated with the spatial channels. The channel characteristics may comprise a signal to noise and interference ratio (SINR) measured by receiver **200** from the spatial channels, although the scope of the present invention is not limited in this respect.

In some embodiments, a receiving station, such as receiver **200**, may measure a multiple-input, multiple-output (MIMO) channel for each subcarrier. The MIMO channel may comprise a plurality of spatially diverse paths. The receiving station may use these measurements to calculate a spatial subchannel SINR for each subcarrier. In these embodiments, the receiving station may use a matrix channel comprising a

channel term for each transmit-receive antenna pair and may use the matrix to calculate a SINR for each subcarrier, although the scope of the present invention is not limited in this respect.

In some embodiments, transmitter **100** (FIG. **1**) and/or receiver **200** may transmit and/or receive RF signals in accordance with specific communication standards, such as the IEEE 802.11(a), 802.11(b), 802.11(g/h) and/or 802.16 standards for wireless local area network (WLAN) communications, although transmitter **100** and/or receiver **200** may also be suitable to transmit and/or receive communications in accordance with other techniques. In some embodiments, the RF signals may comprise OFDM signals comprising a plurality of symbol-modulated subcarriers in either a 5 GHz frequency spectrum or 2.4 GHz frequency spectrum.

In some embodiments, transmitter **100** (FIG. **1**) and/or receiver **200** may be part of a wireless communication device. The wireless communication device may be a personal digital assistant (PDA), a laptop or portable computer with wireless communication capability, a web tablet, a wireless telephone, a wireless headset, a pager, an instant messaging device, an MP3 player, a digital camera, an access point or other device that may receive and/or transmit information wirelessly.

Although transmitter **100** (FIG. **1**) and receiver **200** are illustrated as having several separate functional elements, one or more of the functional elements may be combined and may be implemented by combinations of software-configured elements, such as processing elements including digital signal processors (DSPs), and/or other hardware elements. For example, some elements may comprise one or more microprocessors, DSPs, application specific integrated circuits (ASICs), and combinations of various hardware and logic circuitry for performing at least the functions described herein.

When transmitter **100** (FIG. **1**) and receiver **200** (FIG. **2**) comprise a wireless communication device, there is no requirement that the number of spatially diverse antennas used for transmission be equal to the number of spatially diverse antennas used for reception. In some embodiments, one set of spatially diverse antennas may be used by the wireless communication device for both reception and transmission. However, in accordance with some embodiments, transmitter **100** (FIG. **1**) may include an RF chain for each spatial channel used to transmit, and receiver **200** (FIG. **2**) may include an RF chain for each spatial channel used to receive. In some embodiments, receiver **200** may include beamforming circuitry to receive spatial channels through a single receive antenna, or through more than one receive antennas that do not necessarily correspond to the number of spatial channels.

FIG. **3** is a block diagram of a wireless communication device in accordance with some embodiments of the present invention. Wireless communication device **300** may comprise transceiver **302**, data processor **304**, spatially diverse transmit antennas **306** and spatially diverse receive antennas **308**. Data processor **304** may generate a bit stream, such as bit stream **101** (FIG. **1**), for transmission by a transmitter portion of transceiver **202**. Data processor **304** may also receive a decoded bit stream, such as bit stream **201** (FIG. **2**), from a receiver portion of transceiver **302**.

Wireless communication device **300** may operate in an OFDM system and may employ multiple antennas **306** and **308** to communicate separate data streams on spatial channels. In some embodiments, each spatial channel may use the same set of OFDM subcarriers (for receiving and/or transmitting) and may take advantage of the differing multipath characteristics of the spatial channels allowing the communication of additional data without an increase in frequency bandwidth. In accordance with some embodiments, spatial-frequency subcarrier modulation assignments may be dynamically assigned on a per subcarrier basis per spatial channel to help maximize the data-carrying capacity of the channel.

In some embodiments, transmitter **100** (FIG. **1**) and receiver **200** (FIG. **2**) may be suitable for use as transceiver **302**, although other transceivers may also be suitable. In some of these embodiments, the transmitter and receiver may share IFFT and FFT circuitry. In some embodiments, transceiver **302** may operate in a time-division duplex mode and employ a single set of spatially diverse antennas for use in both transmitting and receiving, although the scope of the invention is not limited in this respect.

In some embodiments, transceiver **302** may include a transmit antenna beamformer to perform beamforming on the time-domain waveforms for subsequent RF transmission over the spatial channels with a single transmit antenna, or a plurality of transmit antennas, such as one or more of antennas **306**. In some embodiments, transceiver **302** may include a receive antenna beamformer to perform beamforming on the time-domain waveforms for subsequent RF transmission over the spatial channels with a single receive antenna, or a plurality of receive antennas, such as one or more of antennas **308**. In these embodiments, antennas **308** and antennas **306** are not necessarily associated with spatial channels.

Wireless communication device **300** is illustrated as a MIMO system. In these embodiments, wireless communication device may employ more than one transmit antenna for more than one output data path and more than one receive antenna for more than one input data path. In other embodiments, wireless communication device **300** may use a single one of transmit antennas **306**, and more than one spatially diverse receive antennas **308**. In other embodiments, wireless communication device **300** may use single one of receive antennas **308**, and more than one spatially diverse transmit antennas **306**.

In some embodiments, a single transmit antenna may be used to transmit over more than one spatial channel by employing beamforming and/or beam-steering techniques. In these embodiments, the transmitter portion of transceiver **302** may include an RF chain associated with each spatial channel. In some embodiments, a single receive antenna may be used to receive over more than one spatial channel by employing beamforming and/or beam-steering techniques. In these embodiments, the receiver portion of transceiver **302** may also include an RF chain associated with each spatial channel.

In some embodiment, reception and transmission may be performed by the same one or more antennas, suitable diplexing or signal separation circuitry may be used to separate received and transmitted signals.

In some embodiments, when device **300** operates as part of an OFDM communication system, such as part of a WLAN, the transport format may be known at both the transmitting station and the receiving station. In some time-division duplex (TDD) embodiments, due to channel reciprocity, both ends of the link may apply the same transport format parameter selection algorithm for selection of the spatial-frequency subcarrier modulation assignments. However estimation errors may result in a different format being applied at the receiving station than was actually transmitted. In other embodiments, transport format parameters may be negotiated between the transmitting station and the receiving station. In some embodiments, a request-to-send/clear-to-send (RTS/CTS) signaling structure may be used, although the scope of the invention is not limited in this respect.

FIG. **4** is a flow chart of an OFDM symbol transmission procedure in accordance with some embodiments of the present invention. OFDM symbol transmission procedure **400** may be performed by a transmitter, such as transmitter **100** (FIG. **1**) to generate an OFDM symbol and transmit the OFDM symbol on more than one spatial channel in accordance with spatial-frequency subcarrier modulation assignments, although other transmitters may also be suitable.

In operation **402**, a block of coded bits representing an OFDM symbol may be interleaved. The OFDM symbol may comprise a number of coded bits per OFDM symbol (Ncbps) **403** which may be determined by the spatial-frequency subcarrier modulation assignments for each subcarrier for each spatial channel. In some embodiments, the number of spatial-frequency subcarrier modulation assignments may equal the number of subcarriers multiplied by the number of spatial channels. In some embodiments, operation **402** may be performed by bit interleaver **104** (FIG. **1**), although the scope of the invention is not limited in this respect.

In operation **404**, the bits may be parsed into groups representing symbols. In some embodiments, the parsing of operation **404** may be performed prior to the interleaving of operation **402**. In these embodiments, interleaving may be performed on each parsed group of bits, although the scope of the invention is not limited in this respect. The number of bits per individual group may be based on a spatial-frequency subcarrier modulation assignment for each subcarrier for an associated spatial channel. The number of groups may be equal to the number of subcarriers multiplied by the number of spatial channels. In some embodiments, operation **404** may be performed by parser **106** (FIG. **1**), although the scope of the invention is not limited in this respect.

In operation **406**, the groups of bits representing symbols are modulated onto OFDM subcarriers to generate symbol-modulated carriers for each spatial channel. The modulation may be based on the spatial-frequency subcarrier modulation assignments for each subcarrier for an associated spatial channel. In some embodiments, operation **406** may be performed by subcarrier modulators **108** (FIG. **1**), although the scope of the invention is not limited in this respect. Modulators **108** (FIG. **1**) may be associated with individual subcarriers.

In operation **408**, a time-domain waveform may be generated for each spatial channel. The time domain waveform may be generated from all OFDM subcarriers associated with a spatial channel. In some embodiments, operation **408** may be performed by IFFT circuitry **110** (FIG. **1**), although the scope of the invention is not limited in this respect. In these embodiments, a modulator may be provided for each subcarrier, and an IFFT processor may be provided for each spatial channel.

In operation **410**, the OFDM symbol comprising the time domain waveforms may be transmitted over the spatial channels Operations **410** may be performed by RF circuitry **112** (FIG. **1**) with one or more of antennas **114** (FIG. **1**), although the scope of the invention is not limited in this respect. In some embodiments, operations **408** and **410** may comprise generating RF signals with an RF chain associated with each spatial channel. The RF chain, for example, may comprise one of RF circuitry **112** (FIG. **1**) and an associated one of IFFT circuitry **110** (FIG. **1**) for each spatial channel. In some embodiments, each RF chain may include an antenna for transmitting RF signals associated with a corresponding spatial channel, although the scope of the preset invention is not limited in this respect.

In other embodiments, a single antenna or another number of antennas not necessarily related to the number of spatial channels may be used. In these embodiments, operation **410** may include performing beamforming operations on the outputs of RF circuitry **112** (FIG. **1**) to allow the transmission of the RF signals on each spatial channel on a single antenna of other number of antennas.

FIG. **5** is a flow chart of an OFDM symbol reception procedure in accordance with some embodiments of the present invention. OFDM symbol reception procedure **500** may be performed by a receiver, such as receiver **200** (FIG. **2**), to receive an OFDM symbol on more than one spatial channel that has been transmitted in accordance with spatial-frequency subcarrier modulation assignments.

In operation **502**, an OFDM symbol may be received over a plurality of spatial channels. In some embodiments, a spatial channel may be associated with a spatially diverse antenna. In other embodiments, the spatial channels may be received using a single antenna or other number of antennas not necessarily related to the number of spatial channels. Operation **502** may include converting received RF signals to serial symbol streams for each spatial channel. In some embodiments, operation **502** may be performed by RF circuitry **212** (FIG. **2**), although the scope of the invention is not limited in this respect.

In operation **504**, frequency domain representations are generated for each spatial channel. In some embodiments, FFT circuitry **210** (FIG. **2**) may perform operation **504**, although the scope of the invention is not limited in this respect.

Operation **506** demodulates the frequency domain representations based on a spatial-frequency subcarrier modulation assignment associated with each subcarrier and each spatial channel. Operation **506** may also generate a group of bits from each subcarrier received over each spatial channel based on the spatial-frequency subcarrier modulation assignments. In some embodiments, operation **506** may be performed by demodulators **208** (FIG. **2**), although the scope of the invention is not limited in this respect.

In some embodiments, operations **502** and **504** may be performed by an RF chain for each spatial channel. The RF chain may, for example, comprise one of RF circuitry **212** (FIG. **2**) and an associated one of FFT circuitry **210** (FIG. **2**) for each spatial channel. Although one of antennas **214** (FIG. **2**) is illustrated for each RF chain, this is not a requirement. Demodulators **208** (FIG. **2**) may perform operation **506** and may be associated with particular subcarriers rather than spatial channels so that a demodulator may demodulate corresponding subcarriers (i.e., of the same subcarrier frequency) of each of the spatial channels.

In some embodiments, each RF chain may include an antenna for receiving RF signals associated with a corresponding spatial channel, although the scope of the preset invention is not limited in this respect. In some other embodiments, a single antenna or another number of antennas not necessarily related to the number of spatial channels may be used. In these other embodiments, operation **502** may include performing beamforming operations on either the inputs to RF circuitry **212** (FIG. **2**) to allow the separation of the RF signals for each spatial channel.

Operation **508** may combine the groups of bits in a proper order based on the spatial-frequency subcarrier modulation assignments to generate a block of bits. In some embodiments, operation **508** may be performed by deparser **206** (FIG. **2**), although the scope of the invention is not limited in this respect.

Operation **510** may deinterleave the block to generate a number of coded bits representing the OFDM symbol. Operation **510** may be performed by deinterleaver **204** (FIG. **2**),

although the scope of the invention is not limited in this respect. The block may be subsequently decoded to generate a coded bit stream. In some embodiments, the parsing may be performed before deinterleaving.

Although the individual operations of procedure **400** (FIG. **4**) and procedure **500** are illustrated and described as separate operations, one or more of the individual operations may be performed concurrently, and nothing requires that the operations be performed in the order illustrated.

Embodiments of the invention may be implemented in one or a combination of hardware, firmware and software. Embodiments of the invention may also be implemented as instructions stored on a machine-readable medium, which may be read and executed by at least one processor to perform the operations described herein. A machine-readable medium may include any mechanism for storing or transmitting information in a form readable by a machine (e.g., a computer). For example, a machine-readable medium may include read-only memory (ROM), random-access memory (RAM), magnetic disk storage media, optical storage media, flash-memory devices, electrical, optical, acoustical or other form of propagated signals (e.g., carrier waves, infrared signals, digital signals, etc.), and others.

The Abstract is provided to comply with 37 C.F.R. Section 1.72(b) requiring an abstract that will allow the reader to ascertain the nature and gist of the technical disclosure. It is submitted with the understanding that it will not be used to limit or interpret the scope or meaning of the claims.

In the foregoing detailed description, various features are occasionally grouped together in a single embodiment for the purpose of streamlining the disclosure. This method of disclosure is not to be interpreted as reflecting an intention that the claimed embodiments of the subject matter require more features than are expressly recited in each claim. Rather, as the following claims reflect, invention lies in less than all features of a single disclosed embodiment. Thus the following claims are hereby incorporated into the detailed description, with each claim standing on its own as a separate preferred embodiment.

What is claimed is:

**1**. A multiple-input multiple-output (MIMO) transmitter adapted to:

transmit orthogonal frequency division multiplexed (OFDM) symbols on four or more subchannels of a wireless communication channel, wherein the channel has a frequency spectrum comprising 5 GHz, and wherein each of the subchannels has a bandwidth of about 20 MHz;

divide the channel into a plurality of spatial streams using beamforming; and

individually modulate subcarriers of each of the spatial streams in accordance with individual subcarrier modulation assignments.

**2**. The transmitter of claim **1**, further including spatially diverse transmit antennas to divide the channel into the plurality of spatial streams.

**3**. The transmitter of claim **1**, wherein the subcarrier modulation assignments range from 0 bits per symbol to ten bits per symbol.

**4**. The transmitter of claim **1**, further being adapted to use a request-to-send/clear to send (RTS/CTS) signaling structure.

**5**. The transmitter of claim **1**, further being adapted to individually modulate subcarriers of each of the spatial streams based on individual subcarrier modulation assignments determined by one or more receivers.

**6**. The transmitter of claim **1**, further adapted to perform an inverse discrete Fourier transform (IDFT) on individually modulated subcarriers.

**7**. The transmitter of claim **1**, wherein the individual subcarrier modulation assignments comprise any of binary phase shift keying (BPSK), quadrature phase shift keying (QPSK), 16-quadrature amplitude modulation (16-QAM), 64-quadrature amplitude modulation (64-QAM), and 256-quadrature amplitude modulation (256-QAM).

**8**. A method of communicating in a wireless network, the method comprising:

transmitting orthogonal frequency division multiplexed (OFDM) symbols on four or more subchannels of a wireless communication channel, wherein the channel has a frequency spectrum comprising 5 GHz, and wherein each of the subchannels has a bandwidth of about 20 MHz;

dividing the channel into a plurality of spatial streams using beamforming; and

individually modulating subcarriers of each of the spatial streams in accordance with individual subcarrier modulation assignments.

**9**. The method of claim **8**, wherein the subcarrier modulation assignments range from 0 bits per symbol to ten bits per symbol.

**10**. The method of claim **8**, further including communicating using a request-to-send/clear to send (RTS/CTS) signaling structure.

**11**. The method of claim **8**, wherein individually modulating includes individually modulating based on individual subcarrier modulation assignments determined by one or more receivers.

**12**. The method of claim **8**, further including performing an inverse fast Fourier transform (IFFT) on individually modulated subcarriers.

**13**. The method of claim **8**, wherein the individual subcarrier modulation assignments comprise any of binary phase shift keying (BPSK), quadrature phase shift keying (QPSK), 16-quadrature amplitude modulation (16-QAM), 64-quadrature amplitude modulation (64-QAM), and 256-quadrature amplitude modulation (256-QAM).

**14**. A method of communicating in a wireless network, the method comprising:

receiving orthogonal frequency division multiplexed (OFDM) symbols on four or more subchannels of a wireless communication channel, wherein the channel has a frequency spectrum comprising 5 GHz and has been divided into a plurality of spatial streams, and wherein each of the subchannels has a bandwidth of about 20 MHz;

determining individual subcarrier modulation assignments for subcarriers of each of the spatial streams based on channel conditions.

**15**. The method of claim **14**, wherein the subcarrier modulation assignments range from 0 bits per symbol to ten bits per symbol.

**16**. The method of claim **14**, further including using a request-to-send/clear to send (RTS/CTS) signaling structure.

**17**. A non-transitory computer-readable storage medium having program instructions stored thereon to perform a method, which when executed within a wireless communication device, result in:

transmitting orthogonal frequency division multiplexed (OFDM) symbols on four or more subchannels of a wireless communication channel, wherein the channel

has a frequency spectrum comprising 5 GHz, and wherein each of the subchannels has a bandwidth of about 20 MHz;

dividing the channel into a plurality of spatial streams using beamforming; and

individually modulating subcarriers of each of the spatial streams in accordance with individual subcarrier modulation assignments.

**18**. The non-transitory computer-readable storage medium of claim **17**, wherein the subcarrier modulation assignments range from 0 bits per symbol to ten bits per symbol.

**19**. The non-transitory computer-readable storage medium of claim **17**, wherein the method, when executed within a wireless communication device, further results in communicating using a request-to-send/clear to send (RTS/CTS) signaling structure.

**20**. The non-transitory computer-readable storage medium of claim **17**, wherein individually modulating includes individually modulating based on individual subcarrier modulation assignments determined by one or more receivers.

**21**. The non-transitory computer-readable storage medium of claim **17**, wherein the method, when executed within a wireless communication device, further results in performing an inverse fast Fourier transform (IFFT) on individually modulated subcarriers.

**22**. The non-transitory computer-readable storage medium of claim **17**, wherein the individual subcarrier modulation assignments comprise any of binary phase shift keying (BPSK), quadrature phase shift keying (QPSK), 16-quadrature amplitude modulation (16-QAM), 64-quadrature amplitude modulation (64-QAM), and 256-quadrature amplitude modulation (256-QAM).

**23**. A multiple-input multiple output (MIMO) system including:

a data processor;

multiple antennas; and

a transceiver having a transmitter portion, the transmitter portion being adapted to:

transmit orthogonal frequency division multiplexed (OFDM) symbols on four or more subchannels of a wireless communication channel, wherein the channel has a frequency spectrum comprising 5 GHz, and wherein each of the subchannels has a bandwidth of about 20 MHz;

divide the channel into a plurality of spatial streams using beamforming; and

individually modulate subcarriers of each of the spatial streams in accordance with individual subcarrier modulation assignments.

**24**. The MIMO system of claim **23**, further including spatially diverse transmit antennas to divide the channel into the plurality of spatial streams.

**25**. The MIMO system of claim **23**, wherein the subcarrier modulation assignments range from 0 bits per symbol to ten bits per symbol.

**26**. The MIMO system of claim **23**, further being adapted to use a request-to-send/clear to send (RTS/CTS) signaling structure.

**27**. The MIMO system of claim **23**, further being adapted to individually modulate subcarriers of each of the spatial streams based on individual subcarrier modulation assignments determined by one or more receivers.

**28**. The MIMO system of claim **23**, further adapted to perform an inverse fast Fourier transform (IFFT) on individually modulated subcarriers.

**29**. The MIMO system of claim **23**, wherein the individual subcarrier modulation assignments comprise any of binary phase shift keying (BPSK), quadrature phase shift keying (QPSK), 16-quadrature amplitude modulation (16-QAM), 64-quadrature amplitude modulation (64-QAM), and 256-quadrature amplitude modulation (256-QAM).

* * * * *