Mobile WiMAX – Part I: A Technical Overview and Performance Evaluation

August, 2006

Copyright 2006 WiMAX Forum
"WiMAX Forum™" and "WiMAX Forum CERTIFIED™" are trademarks of the WiMAX Forum™.

Mobile WiMAX – Part 1: A Technical Overview and Performance Evaluation

This paper has been prepared on behalf of the WiMAX Forum and the information presented represents the combined efforts of many people from several WiMAX Forum organizations with long-standing experience in wireless technologies. Additionally, a broader range of WiMAX Forum members have had the opportunity to review and critique the material and every attempt has been made to ensure accuracy of the information. WiMAX Forum member organizations that have made contributions to the material presented in this paper are:

- Alvarion
- Arraycomm
- ATT
- Beceem
- Intel
- Motorola
- Nortel

The WiMAX Forum is especially grateful to participants from Intel, Motorola, and Nortel for their dedicated efforts and substantial contributions towards completing this paper in a timely manner. The overall preparation and editing was done by Doug Gray, a Telecommunications Consultant under contract to the WiMAX Forum.

Copyright 2006 WiMAX Forum
"WiMAX Forum™" and "WiMAX Forum CERTIFIED™" are trademarks of the WiMAX Forum™.

Acronyms

3GPP	3G Partnership Project
3GPP2	3G Partnership Project 2
AAS	Adaptive Antenna System also Advanced Antenna System
ACK	Acknowledge
AES	Advanced Encryption Standard
AG	Absolute Grant
AMC	Adaptive Modulation and Coding
A-MIMO	Adaptive Multiple Input Multiple Output (Antenna)
AMS	Adaptive MIMO Switching
ARQ	Automatic Repeat reQuest
ASN	Access Service Network
ASP	Application Service Provider
BE	Best Effort
BRAN	Broadband Radio Access Network
CC	Chase Combining (also Convolutional Code)
CCI	Co-Channel Interference
CCM	Counter with Cipher-block chaining Message authentication code
CDF	Cumulative Distribution Function
CDMA	Code Division Multiple Access
CINR	Carrier to Interference + Noise Ratio
CMAC	block Cipher-based Message Authentication Code
CP	Cyclic Prefix
CQI	Channel Quality Indicator
CSN	Connectivity Service Network
CSTD	Cyclic Shift Transmit Diversity
CTC	Convolutional Turbo Code
DL	Downlink
DOCSIS	Data Over Cable Service Interface Specification
DSL	Digital Subscriber Line
DVB	Digital Video Broadcast
EAP	Extensible Authentication Protocol
EESM	Exponential Effective SIR Mapping
EIRP	Effective Isotropic Radiated Power
ErtPS	Extended Real-Time Polling Service
ETSI	European Telecommunications Standards Institute
FBSS	Fast Base Station Switching
FCH	Frame Control Header
FDD	Frequency Division Duplex
FFT	Fast Fourier Transform

Copyright 2006 WiMAX Forum
"WiMAX Forum™" and "WiMAX Forum CERTIFIED™" are trademarks of the WiMAX Forum™.

FUSC	Fully Used Sub-Carrier
HARQ	Hybrid Automatic Repeat reQuest
HHO	Hard Hand-Off
HiperMAN	High Performance Metropolitan Area Network
HMAC	keyed Hash Message Authentication Code
HO	Hand-Off or Hand Over
HTTP	Hyper Text Transfer Protocol
IE	Information Element
IETF	Internet Engineering Task Force
IFFT	Inverse Fast Fourier Transform
IR	Incremental Redundancy
ISI	Inter-Symbol Interference
LDPC	Low-Density-Parity-Check
LOS	Line of Sight
MAC	Media Access Control
MAI	Multiple Access Interference
MAN	Metropolitan Area Network
MAP	Media Access Protocol
MBS	Multicast and Broadcast Service
MDHO	Macro Diversity Hand Over
MIMO	Multiple Input Multiple Output
MMS	Multimedia Message Service
MPLS	Multi-Protocol Label Switching
MS	Mobile Station
MSO	Multi-Services Operator
NACK	Not Acknowledge
NAP	Network Access Provider
NLOS	Non Line-of-Sight
NRM	Network Reference Model
nrtPS	Non-Real-Time Polling Service
NSP	Network Service Provider
OFDM	Orthogonal Frequency Division Multiplex
OFDMA	Orthogonal Frequency Division Multiple Access
PER	Packet Error Rate
PF	Proportional Fair (Scheduler)
PKM	Public Key Management
PUSC	Partially Used Sub-Carrier
QAM	Quadrature Amplitude Modulation
QoS	Quality of Service
QPSK	Quadrature Phase Shift Keying

Copyright 2006 WiMAX Forum
“WiMAX Forum™” and "WiMAX Forum CERTIFIED™“ are trademarks of the WiMAX Forum™.

RG	Relative Grant
RR	Round Robin (Scheduler)
RRI	Reverse Rate Indicator
RTG	Receive/transmit Transition Gap
rtPS	Real-Time Polling Service
RUIM	Removable User Identity Module
SDMA	Space (or Spatial) Division (or Diversity) Multiple Access
SF	Spreading Factor
SFN	Single Frequency Network
SGSN	Serving GPRS Support Node
SHO	Soft Hand-Off
SIM	Subscriber Identify Module
SIMO	Single Input Multiple Output
SINR	Signal to Interference + Noise Ratio
SLA	Service Level Agreement
SM	Spatial Multiplexing
SMS	Short Message Service
SNIR	Signal to Noise + Interference Ratio
SNR	Signal to Noise Ratio
S-OFDMA	Scalable Orthogonal Frequency Division Multiple Access
SS	Subscriber Station
STC	Space Time Coding
TDD	Time Division Duplex
TEK	Traffic Encryption Key
TTG	Transmit/receive Transition Gap
TTI	Transmission Time Interval
TU	Typical Urban (as in channel model)
UE	User Equipment
UGS	Unsolicited Grant Service
UL	Uplink
UMTS	Universal Mobile Telephone System
USIM	Universal Subscriber Identify Module
VoIP	Voice over Internet Protocol
VPN	Virtual Private Network
VSF	Variable Spreading Factor
VSM	Vertical Spatial Multiplexing
WiFi	Wireless Fidelity
WAP	Wireless Application Protocol
WiBro	Wireless Broadband (Service)
WiMAX	Worldwide Interoperability for Microwave Access

Copyright 2006 WiMAX Forum
"WiMAX Forum™" and "WiMAX Forum CERTIFIED™" are trademarks of the WiMAX Forum™.

Table of Contents

EXECUTIVE SUMMARY 8
Mobile WiMAX: A Technical Overview and Performance Evaluation 9
Introduction 9
2. Physical Layer Description 11
2.1 OFDMA Basics 11
2.2 OFDMA Symbol Structure and Sub-Channelization 13
2.3 Scalable OFDMA 15
2.4 TDD Frame Structure 16
2.5 Other Advanced PHY Layer Features 17
3. MAC Layer Description 19
3.1 Quality of Service (QoS) Support 19
3.2 MAC Scheduling Service 21
3.3 Mobility Management 22
3.3.1 Power Management 23
3.3.2 Handoff 23
3.4 Security 24
4. Advanced Features of Mobile WiMAX 25
4.1 Smart Antenna Technologies 25
4.2 Fractional Frequency Reuse 27
4.3 Multicast and Broadcast Service (MBS) 29
5. Mobile WiMAX System Performance Evaluation 30
5.1 Mobile WiMAX System Parameters 30
5.2 Mobile WiMAX Link Budget 32
5.3 Mobile WiMAX MAP Reliability and Overhead 34
5.4 WiMAX System Performance 37
6. End-to-End WiMAX Architecture 40
7. Other Considerations 47
7.1 Mobile WiMAX Open Standards and Ecosystem 47
7.2 Mobile WiMAX Applications 48
7.3 Mobile WiMAX Spectrum Considerations 49
7.4 Roadmap for WiMAX Products 49
8. Conclusion 50
References 52

Figures

Figure 1: Mobile WiMAX System Profile 10
Figure 2: Basic Architecture of an OFDM System 12
Figure 3: Insertion of Cyclic Prefix (CP) 13
Figure 4: OFDMA Sub-Carrier Structure 13
Figure 5: DL Frequency Diverse Sub-Channel 14

Copyright 2006 WiMAX Forum
"WiMAX Forum™" and "WiMAX Forum CERTIFIED™" are trademarks of the WiMAX Forum™.

Figure 6: Tile Structure for UL PUSC 14
Figure 7: WiMAX OFDMA Frame Structure 17
Figure 8: Mobile WiMAX QoS Support 20
Figure 9: Adaptive Switching for Smart Antennas 27
Figure 10: Multi-Zone Frame Structure 28
Figure 11: Fractional Frequency Reuse 29
Figure 12: Embedded MBS Support with Mobile WiMAX – MBS Zones 30
Figure 13: Simulated Performance of Control Channel Coverage for TU Channel 35
Figure 14: Sub-MAP Burst 36
Figure 15: Spectral Efficiency Improvement with Optimized WiMAX 39
Figure 16: Throughput with Varied DL/UL Ratios and Optimized WiMAX 40
Figure 17: WiMAX Network Reference Model 43
Figure 18: WiMAX Network IP-Based Architecture 44
Figure 19: Roadmap for WiMAX Technology 50

Tables

Table 1: OFDMA Scalability Parameters 16
Table 2: Supported Code and Modulations 18
Table 3: Mobile WiMAX PHY Data Rates with PUSC Sub-Channel 18
Table 4: Mobile WiMAX Applications and Quality of Service 21
Table 5: Advanced Antenna Options 25
Table 6: Data Rates for SIMO/MIMO Configurations 26
Table 7: Mobile WiMAX System Parameters 31
Table 8: OFDMA Parameters 32
Table 9: Propagation Model 32
Table 10: DL Link Budget for Mobile WiMAX 33
Table 11: UL Link Budget for Mobile WiMAX 34
Table 12: Multi-Path Channel Models for Performance Simulation 37
Table 13: Mixed User Channel Model for Performance Simulation 37
Table 14: Mobile WiMAX Configuration Assumptions 38
Table 15: Mobile WiMAX System Performance 39
Table 16: WiMAX Application Classes 49

Copyright 2006 WiMAX Forum
"WiMAX Forum™" and "WiMAX Forum CERTIFIED™" are trademarks of the WiMAX Forum™.

Mobile WiMAX – Part I: A Technical Overview and Performance Evaluation

EXECUTIVE SUMMARY

In this document we provide an overview of Mobile WiMAX and provide the performance for the basic minimal configuration based on the WiMAX Forum Release-1 system profiles. We show that mobile WiMAX can provide tens of megabits per second of capacity per channel from each base station with a baseline configuration. Some of the advanced features such as adaptive antenna systems (AAS) which can significantly improve the performance are discussed but not included in the performance analysis.

The high data throughput enables efficient data multiplexing and low data latency. Attributes essential to enable broadband data services including data, streaming video and VoIP with high quality of service (QoS). The performance will enable transparency of quality of service between Mobile WiMAX and broadband wired services such as Cable and DSL, an important requirement for the success of the targeted Mobile Internet application for Mobile WiMAX.

The scalable architecture, high data throughput and low cost deployment make Mobile WiMAX a leading solution for wireless broadband services. Other advantages of WiMAX include an open standards approach, "friendly" IPR structure[1] and healthy ecosystem. Hundreds of companies have contributed to the development of the technology and many companies have announced product plans for this technology. This addresses another important requirement for the success of the technology, which is low cost of subscription services for mobile internet. The broad industry participation will ensure economies of scale that will help drive down the costs of subscription and enable the deployment of mobile internet services globally, including emerging countries.

A companion paper, Mobile WiMAX - Part II: A Comparative Analysis, provides a comparison with contemporary cellular alternatives. The comparison is carried out in qualitative (feature comparison) and quantitative terms to demonstrate the advantages of Mobile WiMAX compared to the available mobile wireless alternatives.

[1] The WiMAX Forum has established an IPR policy that encourages sharing of Intellectual Property among member organizations for the purposes of promoting worldwide adoption of the WiMAX standard that includes licensing on reasonable and non-discriminatory terms and conditions that may or may not include a reasonable royalty or fee.

Copyright 2006 WiMAX Forum
"WiMAX Forum™" and "WiMAX Forum CERTIFIED™" are trademarks of the WiMAX Forum™.

Mobile WiMAX: A Technical Overview and Performance Evaluation

Introduction

The WiMAX technology, based on the IEEE 802.16-2004 Air Interface Standard is rapidly proving itself as a technology that will play a key role in fixed broadband wireless metropolitan area networks. The first certification lab, established at Cetecom Labs in Malaga, Spain is fully operational and more than 150 WiMAX trials are underway in Europe, Asia, Africa and North and South America. Unquestionably, Fixed WiMAX, based on the IEEE 802.16-2004 [1] Air Interface Standard, has proven to be a cost-effective fixed wireless alternative to cable and DSL services. In December, 2005 the IEEE ratified the 802.16e amendment [2] to the 802.16 standard. This amendment adds the features and attributes to the standard necessary to support mobility. The WiMAX Forum is now defining system performance and certification profiles based on the IEEE 802.16e Mobile Amendment and, going beyond the air interface, the WiMAX Forum is defining the network architecture necessary for implementing an end-to-end Mobile WiMAX[2] network. Release-1 system profiles will be completed in early 2006.

Mobile WiMAX is a broadband wireless solution that enables convergence of mobile and fixed broadband networks through a common wide area broadband radio access technology and flexible network architecture. The Mobile WiMAX Air Interface adopts Orthogonal Frequency Division Multiple Access (OFDMA) for improved multi-path performance in non-line-of-sight environments. Scalable OFDMA (SOFDMA) [3] is introduced in the IEEE 802.16e Amendment to support scalable channel bandwidths from 1.25 to 20 MHz. The Mobile Technical Group (MTG) in the WiMAX Forum is developing the Mobile WiMAX system profiles that will define the mandatory and optional features of the IEEE standard that are necessary to build a Mobile WiMAX-compliant air interface that can be certified by the WiMAX Forum. The Mobile WiMAX System Profile enables mobile systems to be configured based on a common base feature set thus ensuring baseline functionality for terminals and base stations that are fully interoperable. Some elements of the base station profiles are specified as optional to provide additional flexibility for deployment based on specific deployment scenarios that may require different configurations that are either capacity-optimized or coverage-optimized. Release-1 Mobile WiMAX profiles will cover 5, 7, 8.75, and 10 MHz channel bandwidths for licensed worldwide spectrum allocations in the 2.3 GHz, 2.5 GHz, 3.3 GHz and 3.5 GHz frequency bands.

[2] The term WiMAX has been used generically to describe wireless systems based on the WiMAX certification profiles based on the IEEE 802.16-2004 Air Interface Standard. With additional profiles pending based on the IEEE 802.16e-2005 Mobile Amendment, it is necessary to differentiate between the two WiMAX systems. “Fixed” WiMAX is used to describe 802.16-2004 based systems and “Mobile” WiMAX is used to describe 802.16e-2005 based systems.

Copyright 2006 WiMAX Forum
“WiMAX Forum™” and "WiMAX Forum CERTIFIED™“ are trademarks of the WiMAX Forum™.

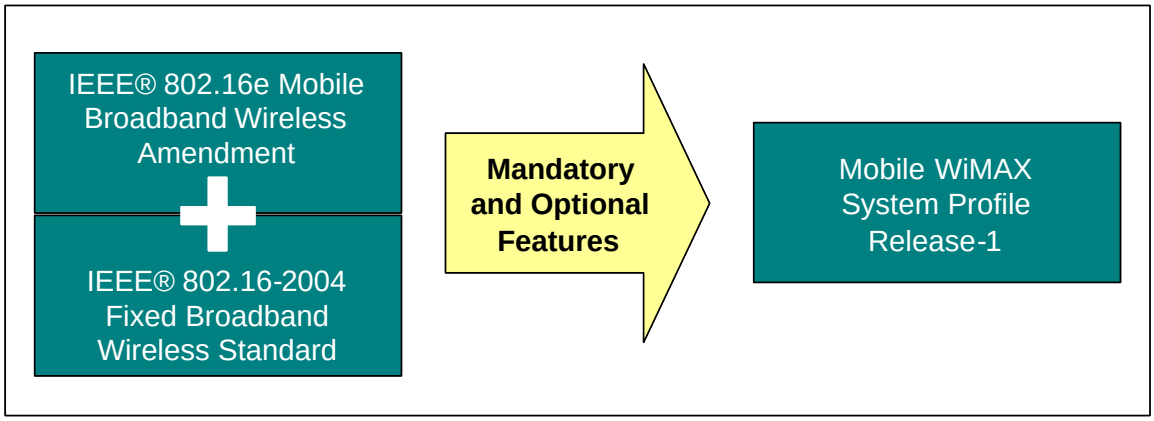

Figure 1: Mobile WiMAX System Profile

The WiMAX Forum Network Working Group (NWG) is developing the higher-level networking specifications [4] for Mobile WiMAX systems beyond what is defined in the IEEE 802.16 standard that simply addresses the air interface specifications. The combined effort of IEEE 802.16 and the WiMAX Forum help define the end-to-end system solution for a Mobile WiMAX network.

Mobile WiMAX systems offer scalability in both radio access technology and network architecture, thus providing a great deal of flexibility in network deployment options and service offerings. Some of the salient features supported by Mobile WiMAX are:

- **High Data Rates:** The inclusion of MIMO antenna techniques along with flexible sub-channelization schemes, Advanced Coding and Modulation all enable the Mobile WiMAX technology to support peak DL data rates up to 63 Mbps per sector and peak UL data rates up to 28 Mbps per sector in a 10 MHz channel.
- **Quality of Service (QoS):** The fundamental premise of the IEEE 802.16 MAC architecture is QoS. It defines Service Flows which can map to DiffServ code points or MPLS flow labels that enable end-to-end IP based QoS. Additionally, sub-channelization and MAP-based signaling schemes provide a flexible mechanism for optimal scheduling of space, frequency and time resources over the air interface on a frame-by-frame basis.
- **Scalability***:* Despite an increasingly globalized economy, spectrum resources for wireless broadband worldwide are still quite disparate in its allocations. Mobile WiMAX technology therefore, is designed to be able to scale to work in different channelizations from 1.25 to 20 MHz to comply with varied worldwide requirements as efforts proceed to achieve spectrum harmonization in the longer term. This also allows diverse economies to realize the multi-faceted benefits of the Mobile WiMAX technology for their specific geographic needs such as providing affordable internet

Copyright 2006 WiMAX Forum
"WiMAX Forum™" and "WiMAX Forum CERTIFIED™" are trademarks of the WiMAX Forum™.

access in rural settings versus enhancing the capacity of mobile broadband access in metro and suburban areas.

- **Security:** The features provided for Mobile WiMAX security aspects are best in class with EAP-based authentication, AES-CCM-based authenticated encryption, and CMAC and HMAC based control message protection schemes. Support for a diverse set of user credentials exists including; SIM/USIM cards, Smart Cards, Digital Certificates, and Username/Password schemes based on the relevant EAP methods for the credential type.
- **Mobility:** Mobile WiMAX supports optimized handover schemes with latencies less than 50 milliseconds to ensure real-time applications such as VoIP perform without service degradation. Flexible key management schemes assure that security is maintained during handover.

While the Mobile WiMAX standards activity has been progressing, equipment suppliers have been aggressively developing equipment that will be WiMAX/802.16e-2005 compliant. With commercial availability of Mobile WiMAX-compliant equipment anticipated in the very near future and the launch of WiBro services this year in Korea, it begs the question as to how the Mobile WiMAX technology relates to and impacts concurrent advances in 3G cellular technology. To address this question it is necessary to gain an understanding of the underlying technology for Mobile WiMAX as well as the planned 3G enhancements. The white paper comprises two parts. Part I is focused on Mobile WiMAX. It provides a detailed discussion of the Mobile WiMAX technology based on the planned WiMAX Forum Certification profiles and includes a detailed analysis of Mobile WiMAX performance projections in a mobile environment. An extensive list of references is also provided for the reader seeking further information on any of WiMAX features and attributes discussed in the paper. Part II [5] of the white paper provides an overview of enhancements to CDMA-based 3G systems and offers both a qualitative and quantitative comparative analysis of Mobile WiMAX relative to the 3G cellular technologies.

2. Physical Layer Description

2.1 OFDMA Basics

Orthogonal Frequency Division Multiplexing (OFDM) [6,7] is a multiplexing technique that subdivides the bandwidth into multiple frequency sub-carriers as shown in Figure 2. In an OFDM system, the input data stream is divided into several parallel sub-streams of reduced data rate (thus increased symbol duration) and each sub-stream is modulated and transmitted on a separate orthogonal sub-carrier. The increased symbol duration improves the robustness of OFDM to delay spread. Furthermore, the introduction of the cyclic prefix (CP) can completely eliminate Inter-Symbol Interference (ISI) as long as the CP duration is longer than the channel delay spread. The CP is typically a repetition of the

Copyright 2006 WiMAX Forum
"WiMAX Forum™" and "WiMAX Forum CERTIFIED™" are trademarks of the WiMAX Forum™.

last samples of data portion of the block that is appended to the beginning of the data payload as shown in Figure 3. The CP prevents inter-block interference and makes the channel appear circular and permits low-complexity frequency domain equalization. A perceived drawback of CP is that it introduces overhead, which effectively reduces bandwidth efficiency. While the CP does reduce bandwidth efficiency somewhat, the impact of the CP is similar to the "roll-off factor" in raised-cosine filtered single-carrier systems. Since OFDM has a very sharp, almost "brick-wall" spectrum, a large fraction of the allocated channel bandwidth can be utilized for data transmission, which helps to moderate the loss in efficiency due to the cyclic prefix.

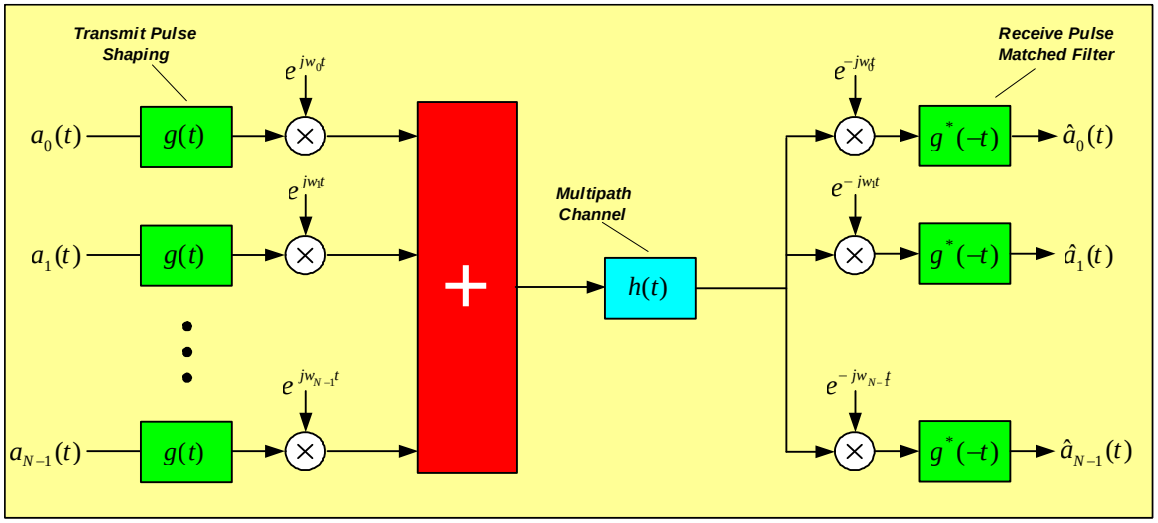

Figure 2: Basic Architecture of an OFDM System

OFDM exploits the frequency diversity of the multipath channel by coding and interleaving the information across the sub-carriers prior to transmissions. OFDM modulation can be realized with efficient Inverse Fast Fourier Transform (IFFT), which enables a large number of sub-carriers (up to 2048) with low complexity. In an OFDM system, resources are available in the time domain by means of OFDM symbols and in the frequency domain by means of sub-carriers. The time and frequency resources can be organized into sub-channels for allocation to individual users. Orthogonal Frequency Division Multiple Access (OFDMA) is a multiple-access/multiplexing scheme that provides multiplexing operation of data streams from multiple users onto the downlink sub-channels and uplink multiple access by means of uplink sub-channels.

Copyright 2006 WiMAX Forum
"WiMAX Forum™" and "WiMAX Forum CERTIFIED™" are trademarks of the WiMAX Forum™.

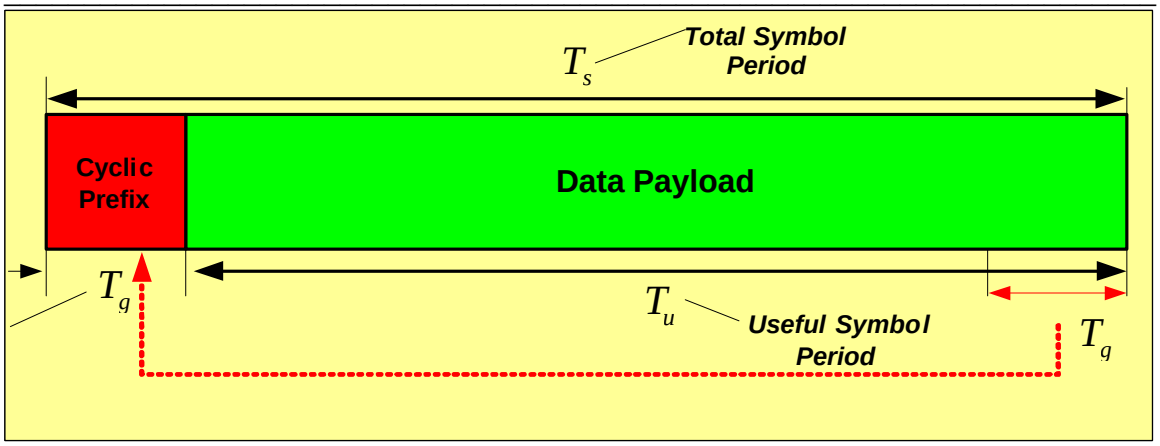

Figure 3: Insertion of Cyclic Prefix (CP)

2.2 OFDMA Symbol Structure and Sub-Channelization

The OFDMA symbol structure consists of three types of sub-carriers as shown in Figure 4:

- Data sub-carriers for data transmission
- Pilot sub-carriers for estimation and synchronization purposes
- Null sub-carriers for no transmission; used for guard bands and DC carriers

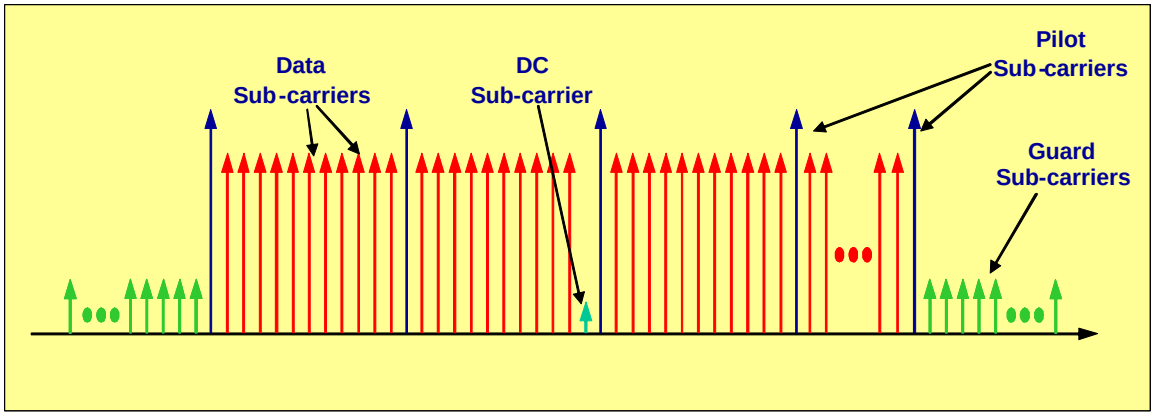

Figure 4: OFDMA Sub-Carrier Structure

Active (data and pilot) sub-carriers are grouped into subsets of sub-carriers called sub-channels. The WiMAX OFDMA PHY [3] supports sub-channelization in both DL and UL. The minimum frequency-time resource unit of sub-channelization is one slot, which is equal to 48 data tones (sub-carriers).

Copyright 2006 WiMAX Forum
"WiMAX Forum™" and "WiMAX Forum CERTIFIED™" are trademarks of the WiMAX Forum™.

There are two types of sub-carrier permutations for sub-channelization; *diversity* and *contiguous*. The diversity permutation draws sub-carriers pseudo-randomly to form a sub-channel. It provides frequency diversity and inter-cell interference averaging. The diversity permutations include DL FUSC (Fully Used Sub-Carrier), DL PUSC (Partially Used Sub-Carrier) and UL PUSC and additional optional permutations. With DL PUSC, for each pair of OFDM symbols, the available or usable sub-carriers are grouped into *clusters* containing 14 contiguous sub-carriers per symbol period, with pilot and data allocations in each cluster in the even and odd symbols as shown in Figure 5.

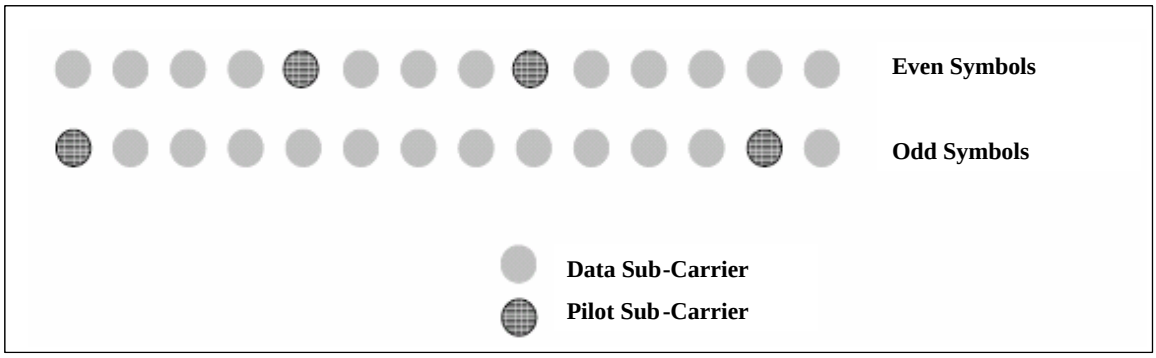

Figure 5: DL Frequency Diverse Sub-Channel

A re-arranging scheme is used to form *groups* of clusters such that each group is made up of clusters that are distributed throughout the sub-carrier space. A sub-channel in a group contains two (2) clusters and is made up of 48 data sub-carriers and eight (8) pilot sub-carriers. The data sub-carriers in each group are further permutated to generate sub-channels within the group. Therefore, only the pilot positions in the cluster are shown in Figure 5. The data sub-carriers in the cluster are distributed to multiple sub-channels.

Analogous to the cluster structure for DL, a *tile* structure is defined for the UL PUSC whose format is shown in Figure 6.

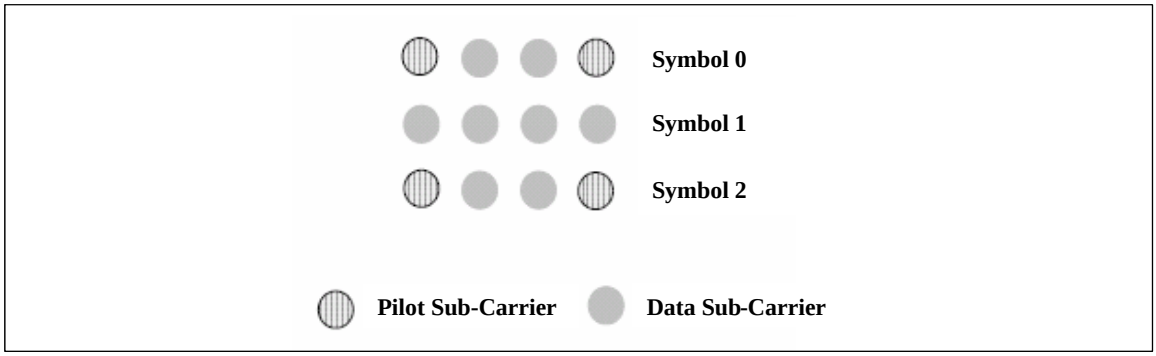

Figure 6: Tile Structure for UL PUSC

Copyright 2006 WiMAX Forum
"WiMAX Forum™" and "WiMAX Forum CERTIFIED™" are trademarks of the WiMAX Forum™.

The available sub-carrier space is split into tiles and six (6) tiles, chosen from across the entire spectrum by means of a re-arranging/permutation scheme, are grouped together to form a *slot. The slot comprises 48 data sub-carriers and 24 pilot sub-carriers in 3 OFDM symbols.*

The contiguous permutation groups a block of contiguous sub-carriers to form a sub-channel. The contiguous permutations include DL AMC and UL AMC, and have the same structure. A bin consists of 9 contiguous sub-carriers in a symbol, with 8 assigned for data and one assigned for a pilot. A *slot* in AMC is defined as a collection of bins of the type (N x M = 6), where N is the number of contiguous bins and M is the number of contiguous symbols. Thus the allowed combinations are [(6 bins, 1 symbol), (3 bins, 2 symbols), (2 bins, 3 symbols), (1 bin, 6 symbols)]. AMC permutation enables multi-user diversity by choosing the sub-channel with the best frequency response.

In general, diversity sub-carrier permutations perform well in mobile applications while contiguous sub-carrier permutations are well suited for fixed, portable, or low mobility environments. These options enable the system designer to trade-off mobility for throughput.

2.3 Scalable OFDMA

The IEEE 802.16e-2005 Wireless MAN OFDMA mode is based on the concept of scalable OFDMA (S-OFDMA). S-OFDMA supports a wide range of bandwidths to flexibly address the need for various spectrum allocation and usage model requirements. The scalability is supported by adjusting the FFT size while fixing the sub-carrier frequency spacing at 10.94 kHz. Since the resource unit sub-carrier bandwidth and symbol duration is fixed, the impact to higher layers is minimal when scaling the bandwidth. The S-OFDMA parameters are listed in Table 1. The system bandwidths for two of the initial planned profiles being developed by the WiMAX Forum Technical Working Group for Release-1 are 5 and 10 MHz[3] (highlighted in the table).

Parameters	Values			
System Channel Bandwidth (MHz)	1.25	5	10	20
Sampling Frequency (F_p in MHz)	1.4	5.6	11.2	22.4
FFT Size (N_{FFT})	128	512	1024	2048
Number of Sub-Channels	2	8	16	32
Sub-Carrier Frequency Spacing	10.94 kHz			
Useful Symbol Time (T_b = 1/f)	91.4 microseconds			

[3] Channel bandwidths of 7 and 8.75 MHz are also planned in Release-1. With a FFT size of 1024 and a sampling factor of 8/7, the Sub-Carrier Frequency spacing for these two cases is 7.81 and 9.77 kHz respectively.

Copyright 2006 WiMAX Forum
"WiMAX Forum™" and "WiMAX Forum CERTIFIED™" are trademarks of the WiMAX Forum™.

Parameters	Values
Guard Time ($T_g = T_b/8$)	11.4 microseconds
OFDMA Symbol Duration ($T_s = T_b + T_g$)	102.9 microseconds
Number of OFDMA Symbols (5 ms Frame)	48

Table 1: OFDMA Scalability Parameters

2.4 TDD Frame Structure

The 802.16e PHY [3] supports TDD and Full and Half-Duplex FDD operation; however the initial release of Mobile WiMAX certification profiles will only include TDD. With ongoing releases, FDD profiles will be considered by the WiMAX Forum to address specific market opportunities where local spectrum regulatory requirements either prohibit TDD or are more suitable for FDD deployments. To counter interference issues, TDD does require system-wide synchronization; nevertheless, TDD is the preferred duplexing mode for the following reasons:

- TDD enables adjustment of the downlink/uplink ratio to efficiently support asymmetric downlink/uplink traffic, while with FDD, downlink and uplink always have fixed and generally, equal DL and UL bandwidths.
- TDD assures channel reciprocity for better support of link adaptation, MIMO and other closed loop advanced antenna technologies.
- Unlike FDD, which requires a pair of channels, TDD only requires a single channel for both downlink and uplink providing greater flexibility for adaptation to varied global spectrum allocations.
- Transceiver designs for TDD implementations are less complex and therefore less expensive.

Figure 7 illustrates the OFDM frame structure for a Time Division Duplex (TDD) implementation. Each frame is divided into DL and UL sub-frames separated by Transmit/Receive and Receive/Transmit Transition Gaps (TTG and RTG, respectively) to prevent DL and UL transmission collisions. In a frame, the following control information is used to ensure optimal system operation:

- **Preamble:** The preamble, used for synchronization, is the first OFDM symbol of the frame.
- **Frame Control Header (FCH):** The FCH follows the preamble. It provides the frame configuration information such as MAP message length and coding scheme and usable sub-channels.
- **DL-MAP and UL-MAP:** The DL-MAP and UL-MAP provide sub-channel allocation and other control information for the DL and UL sub-frames respectively.

Copyright 2006 WiMAX Forum
"WiMAX Forum™" and "WiMAX Forum CERTIFIED™" are trademarks of the WiMAX Forum™.

- **UL Ranging:** The UL ranging sub-channel is allocated for mobile stations (MS) to perform closed-loop time, frequency, and power adjustment as well as bandwidth requests.
- **UL CQICH:** The UL CQICH channel is allocated for the MS to feedback channel-state information.
- **UL ACK:** The UL ACK is allocated for the MS to feedback DL HARQ acknowledge.

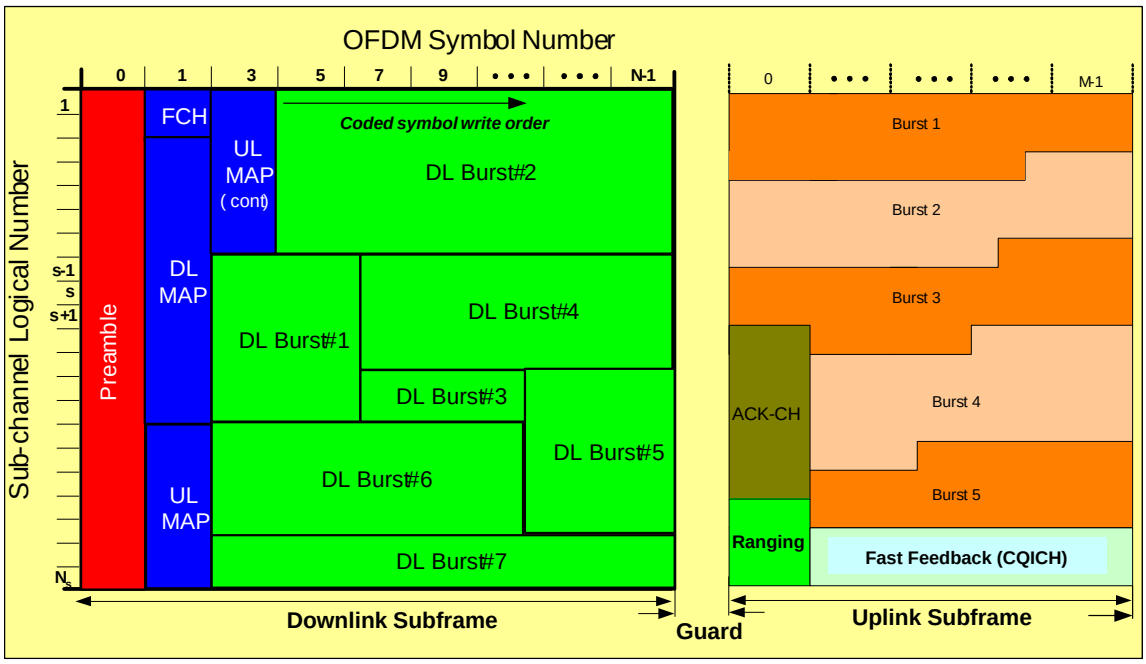

Figure 7: WiMAX OFDMA Frame Structure

2.5 Other Advanced PHY Layer Features

Adaptive modulation and coding (AMC), Hybrid Automatic Repeat Request (HARQ) and Fast Channel Feedback (CQICH) were introduced with Mobile WiMAX to enhance coverage and capacity for WiMAX in mobile applications.

Support for QPSK, 16QAM and 64QAM are mandatory in the DL with Mobile WiMAX. In the UL, 64QAM is optional. Both Convolutional Code (CC) and Convolutional Turbo Code (CTC) with variable code rate and repetition coding are supported. Block Turbo Code and Low Density Parity Check Code (LDPC) are supported as optional features. Table 2 summarizes the coding and modulation schemes supported in the Mobile WiMAX profile the optional UL codes and modulation are shown in italics.

Copyright 2006 WiMAX Forum
"WiMAX Forum™" and "WiMAX Forum CERTIFIED™" are trademarks of the WiMAX Forum™.

		DL	UL
Modulation		QPSK, 16QAM, 64QAM	QPSK,16QAM, *64QAM*
Code Rate	CC	1/2, 2/3, 3/4, 5/6	1/2, 2/3, *5/6*
	CTC	1/2, 2/3, 3/4, 5/6	1/2, 2/3, *5/6*
	Repetition	x2, x4, x6	x2, x4, x6

Table 2: Supported Code and Modulations

The combinations of various modulations and code rates provide a fine resolution of data rates as shown in Table 3 which shows the data rates for 5 and 10 MHz channels with PUSC sub-channels. The frame duration is 5 milliseconds. Each frame has 48 OFDM symbols, with 44 OFDM symbols available for data transmission. The highlighted values indicate data rates for optional 64QAM in the UL.

Parameter		Downlink	Uplink	Downlink	Uplink
System Bandwidth		5 MHz		10 MHz	
FFT Size		512		1024	
Null Sub-Carriers		92	104	184	184
Pilot Sub-Carriers		60	136	120	280
Data Sub-Carriers		360	272	720	560
Sub-Channels		15	17	30	35
Symbol Period, T_S		102.9 microseconds			
Frame Duration		5 milliseconds			
OFDM Symbols/Frame		48			
Data OFDM Symbols		44			
Mod.	**Code Rate**	**5 MHz Channel**		**10 MHz Channel**	
		Downlink Rate, Mbps	**Uplink Rate, Mbps**	**Downlink Rate, Mbps**	**Uplink Rate, Mbps**
QPSK	1/2 CTC, 6x	0.53	0.38	1.06	0.78
	1/2 CTC, 4x	0.79	0.57	1.58	1.18
	1/2 CTC, 2x	1.58	1.14	3.17	2.35
	1/2 CTC, 1x	3.17	2.28	6.34	4.70
	3/4 CTC	4.75	3.43	9.50	7.06
16QAM	1/2 CTC	6.34	4.57	12.67	9.41
	3/4 CTC	9.50	6.85	19.01	14.11
64QAM	1/2 CTC	9.50	*6.85*	19.01	*14.11*
	2/3 CTC	12.67	*9.14*	25.34	*18.82*
	3/4 CTC	14.26	*10.28*	28.51	*21.17*
	5/6 CTC	15.84	*11.42*	31.68	*23.52*

Table 3: Mobile WiMAX PHY Data Rates with PUSC Sub-Channel[4]

[4] PHY Data Rate=(Data sub-carriers/Symbol period)*(information bits per symbol)

Copyright 2006 WiMAX Forum
"WiMAX Forum™" and "WiMAX Forum CERTIFIED™" are trademarks of the WiMAX Forum™.

The base station scheduler determines the appropriate data rate (or burst profile) for each burst allocation based on the buffer size, channel propagation conditions at the receiver, etc. A Channel Quality Indicator (CQI) channel is utilized to provide channel-state information from the user terminals to the base station scheduler. Relevant channel-state information can be fed back by the CQICH including: Physical CINR, effective CINR, MIMO mode selection and frequency selective sub-channel selection. With TDD implementations, link adaptation can also take advantage of channel reciprocity to provide a more accurate measure of the channel condition (such as sounding).

Hybrid Auto Repeat Request (HARQ) is supported by Mobile WiMAX. HARQ is enabled using *N* channel "Stop and Wait" protocol which provides fast response to packet errors and improves cell edge coverage. Chase Combining and optionally, Incremental Redundancy are supported to further improve the reliability of the retransmission. A dedicated ACK channel is also provided in the uplink for HARQ ACK/NACK signaling. Multi-channel HARQ operation is supported. Multi-channel stop-and-wait ARQ with a small number of channels is an efficient, simple protocol that minimizes the memory required for HARQ and stalling [8]. WiMAX provides signaling to allow fully asynchronous operation. The asynchronous operation allows variable delay between retransmissions which gives more flexibility to the scheduler at the cost of additional overhead for each retransmission allocation. HARQ combined together with CQICH and AMC provides robust link adaptation in mobile environments at vehicular speeds in excess of 120 km/hr.

3. MAC Layer Description

The 802.16 standard was developed from the outset for the delivery of broadband services including voice, data, and video. The MAC layer is based on the time-proven DOCSIS standard and can support bursty data traffic with high peak rate demand [9] while simultaneously supporting streaming video and latency-sensitive voice traffic over the same channel. The resource allocated to one terminal by the MAC scheduler can vary from a single time slot to the entire frame, thus providing a very large dynamic range of throughput to a specific user terminal at any given time. Furthermore, since the resource allocation information is conveyed in the MAP messages at the beginning of each frame, the scheduler can effectively change the resource allocation on a frame-by-frame basis to adapt to the bursty nature of the traffic.

3.1 Quality of Service (QoS) Support

With fast air link, asymmetric downlink/uplink capability, fine resource granularity and a flexible resource allocation mechanism, Mobile WiMAX can meet QoS requirements for a wide range of data services and applications.

In the Mobile WiMAX MAC layer, QoS is provided via service flows as illustrated in Figure 8. This is a unidirectional flow of packets that is provided with a particular set of

Copyright 2006 WiMAX Forum
"WiMAX Forum™" and "WiMAX Forum CERTIFIED™" are trademarks of the WiMAX Forum™.

QoS parameters. Before providing a certain type of data service, the base station and user-terminal first establish a unidirectional logical link between the peer MACs called a connection. The outbound MAC then associates packets traversing the MAC interface into a service flow to be delivered over the connection. The QoS parameters associated with the service flow define the transmission ordering and scheduling on the air interface. The connection-oriented QoS therefore, can provide accurate control over the air interface. Since the air interface is usually the bottleneck, the connection-oriented QoS can effectively enable the end-to-end QoS control. The service flow parameters can be dynamically managed through MAC messages to accommodate the dynamic service demand. The service flow based QoS mechanism applies to both DL and UL to provide improved QoS in both directions. Mobile WiMAX supports a wide range of data services and applications with varied QoS requirements. These are summarized in Table 4.

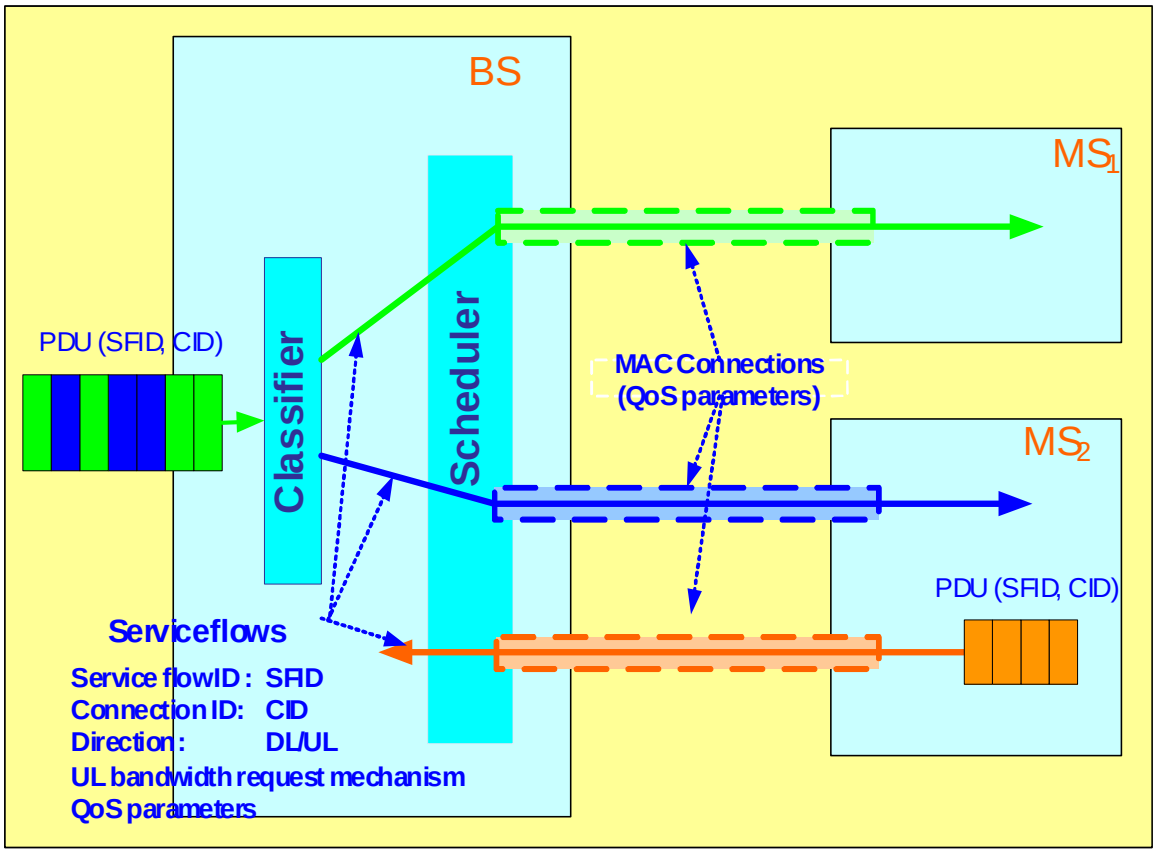

Figure 8: Mobile WiMAX QoS Support

Copyright 2006 WiMAX Forum
"WiMAX Forum™" and "WiMAX Forum CERTIFIED™" are trademarks of the WiMAX Forum™.

QoS Category	Applications	QoS Specifications
UGS Unsolicited Grant Service	VoIP	• Maximum Sustained Rate • Maximum Latency Tolerance • Jitter Tolerance
rtPS Real-Time Polling Service	Streaming Audio or Video	• Minimum Reserved Rate • Maximum Sustained Rate • Maximum Latency Tolerance • Traffic Priority
ErtPS Extended Real-Time Polling Service	Voice with Activity Detection (VoIP)	• Minimum Reserved Rate • Maximum Sustained Rate • Maximum Latency Tolerance • Jitter Tolerance • Traffic Priority
nrtPS Non-Real-Time Polling Service	File Transfer Protocol (FTP)	• Minimum Reserved Rate • Maximum Sustained Rate • Traffic Priority
BE Best-Effort Service	Data Transfer, Web Browsing, etc.	• Maximum Sustained Rate • Traffic Priority

Table 4: Mobile WiMAX Applications and Quality of Service

3.2 MAC Scheduling Service

The Mobile WiMAX MAC scheduling service is designed to efficiently deliver broadband data services including voice, data, and video over time varying broadband wireless channel. The MAC scheduling service has the following properties that enable the broadband data service:

- **Fast Data Scheduler:** The MAC scheduler must efficiently allocate available resources in response to bursty data traffic and time-varying channel conditions. The scheduler is located at each base station to enable rapid response to traffic requirements and channel conditions. The data packets are associated to service flows with well defined QoS parameters in the MAC layer so that the scheduler can correctly determine the packet transmission ordering over the air interface. The CQICH channel provides fast channel information feedback to enable the scheduler to choose the appropriate coding and modulation for each allocation. The adaptive modulation/coding combined with HARQ provide robust transmission over the time-varying channel.

Copyright 2006 WiMAX Forum
"WiMAX Forum™" and "WiMAX Forum CERTIFIED™" are trademarks of the WiMAX Forum™.

- **Scheduling for both DL and UL:** The scheduling service is provided for both DL and UL traffic. In order for the MAC scheduler to make an efficient resource allocation and provide the desired QoS in the UL, the UL must feedback accurate and timely information as to the traffic conditions and QoS requirements. Multiple uplink bandwidth request mechanisms, such as bandwidth request through ranging channel, piggyback request and polling are designed to support UL bandwidth requests. The UL service flow defines the feedback mechanism for each uplink connection to ensure predictable UL scheduler behavior. Furthermore, with orthogonal UL sub-channels, there is no intra-cell interference. UL scheduling can allocate resource more efficiently and better enforce QoS.

- **Dynamic Resource Allocation**: The MAC supports frequency-time resource allocation in both DL and UL on a per-frame basis. The resource allocation is delivered in MAP messages at the beginning of each frame. Therefore, the resource allocation can be changed frame-by-frame in response to traffic and channel conditions. Additionally, the amount of resource in each allocation can range from one slot to the entire frame. The fast and fine granular resource allocation allows superior QoS for data traffic.

- **QoS Oriented:** The MAC scheduler handles data transport on a connection-by-connection basis. Each connection is associated with a single data service with a set of QoS parameters that quantify the aspects of its behavior. With the ability to dynamically allocate resources in both DL and UL, the scheduler can provide superior QoS for both DL and UL traffic. Particularly with uplink scheduling - *the uplink resource is more efficiently allocated, performance is more predictable, and QoS is better enforced.*

- **Frequency Selective Scheduling:** The scheduler can operate on different types of sub-channels. For frequency-diverse sub-channels such as PUSC permutation, where sub-carriers in the sub-channels are pseudo-randomly distributed across the bandwidth, sub-channels are of similar quality. Frequency-diversity scheduling can support a QoS with fine granularity and flexible time-frequency resource scheduling. With contiguous permutation such as AMC permutation, the sub-channels may experience different attenuation. The frequency-selective scheduling can allocate mobile users to their corresponding strongest sub-channels. The frequency-selective scheduling can enhance system capacity with a moderate increase in CQI overhead in the UL [10].

3.3 Mobility Management

Battery life and handoff are two critical issues for mobile applications. Mobile WiMAX supports Sleep Mode and Idle Mode to enable power-efficient MS operation. Mobile WiMAX also supports seamless handoff to enable the MS to switch from one base station to another at vehicular speeds without interrupting the connection.

Copyright 2006 WiMAX Forum
"WiMAX Forum™" and "WiMAX Forum CERTIFIED™" are trademarks of the WiMAX Forum™.

3.3.1 Power Management

Mobile WiMAX supports two modes for power efficient operation – Sleep Mode and Idle Mode. Sleep Mode is a state in which the MS conducts pre-negotiated periods of absence from the Serving Base Station air interface. These periods are characterized by the unavailability of the MS, as observed from the Serving Base Station, to DL or UL traffic. Sleep Mode is intended to minimize MS power usage and minimize the usage of the Serving Base Station air interface resources. The Sleep Mode also provides flexibility for the MS to scan other base stations to collect information to assist handoff during the Sleep Mode.

Idle Mode provides a mechanism for the MS to become periodically available for DL broadcast traffic messaging without registration at a specific base station as the MS traverses an air link environment populated by multiple base stations. Idle Mode benefits the MS by removing the requirement for handoff and other normal operations and benefits the network and base station by eliminating air interface and network handoff traffic from essentially inactive MSs while still providing a simple and timely method (paging) for alerting the MS about pending DL traffic.

3.3.2 Handoff

There are three handoff methods supported within the 802.16e standard – Hard Handoff (HHO), Fast Base Station Switching (FBSS) and Macro Diversity Handover (MDHO). Of these, the HHO is mandatory while FBSS and MDHO are two optional modes. The WiMAX Forum has developed several techniques for optimizing hard handoff within the framework of the 802.16e standard. These improvements have been developed with the goal of keeping Layer 2 handoff delays to less than 50 milliseconds.

When FBSS is supported, the MS and BS maintain a list of BSs that are involved in FBSS with the MS. This set is called an Active Set. In FBSS, the MS continuously monitors the base stations in the Active Set. Among the BSs in the Active Set, an Anchor BS is defined. When operating in FBSS, the MS only communicates with the Anchor BS for uplink and downlink messages including management and traffic connections. Transition from one Anchor BS to another (i.e. BS switching) is performed without invocation of explicit HO signaling messages. Anchor update procedures are enabled by communicating signal strength of the serving BS via the CQI channel. A FBSS handover begins with a decision by an MS to receive or transmit data from the Anchor BS that may change within the active set. The MS scans the neighbor BSs and selects those that are suitable to be included in the active set. The MS reports the selected BSs and the active set update procedure is performed by the BS and MS. The MS continuously monitors the signal strength of the BSs that are in the active set and selects one BS from the set to be the Anchor BS. The MS reports the selected Anchor BS on CQICH or MS initiated HO request message. An important requirement of FBSS is that the data is simultaneously transmitted to all members of an active set of BSs that are able to serve the MS.

Copyright 2006 WiMAX Forum
"WiMAX Forum™" and "WiMAX Forum CERTIFIED™" are trademarks of the WiMAX Forum™.

For MSs and BSs that support MDHO, the MS and BS maintain an active set of BSs that are involved in MDHO with the MS. Among the BSs in the active set, an Anchor BS is defined. The regular mode of operation refers to a particular case of MDHO with the active set consisting of a single BS. When operating in MDHO, the MS communicates with all BSs in the active set of uplink and downlink unicast messages and traffic. A MDHO begins when a MS decides to transmit or receive unicast messages and traffic from multiple BSs in the same time interval. For downlink MDHO, two or more BSs provide synchronized transmission of MS downlink data such that diversity combining is performed at the MS. For uplink MDHO, the transmission from a MS is received by multiple BSs where selection diversity of the information received is performed.

3.4 Security

Mobile WiMAX supports best in class security features by adopting the best technologies available today. Support exists for mutual device/user authentication, flexible key management protocol, strong traffic encryption, control and management plane message protection and security protocol optimizations for fast handovers.

The usage aspects of the security features are:

- **Key Management Protocol:** Privacy and Key Management Protocol Version 2 (PKMv2) is the basis of Mobile WiMAX security as defined in 802.16e. This protocol manages the MAC security using PKM-REQ/RSP messages. PKM EAP authentication, Traffic Encryption Control, Handover Key Exchange and Multicast/Broadcast security messages all are based on this protocol.
- **Device/User Authentication:** Mobile WiMAX supports Device and User Authentication using IETF EAP protocol by providing support for credentials that are SIM-based, USIM-based or Digital Certificate or UserName/Password-based. Corresponding EAP-SIM, EAP-AKA, EAP-TLS or EAP-MSCHAPv2 authentication methods are supported through the EAP protocol. Key deriving methods are the only EAP methods supported.
- **Traffic Encryption:** AES-CCM is the cipher used for protecting all the user data over the Mobile WiMAX MAC interface. The keys used for driving the cipher are generated from the EAP authentication. A Traffic Encryption State machine that has a periodic key (TEK) refresh mechanism enables sustained transition of keys to further improve protection.
- **Control Message Protection:** Control data is protected using AES based CMAC, or MD5-based HMAC schemes.
- **Fast Handover Support:** A 3-way Handshake scheme is supported by Mobile WiMAX to optimize the re-authentication mechanisms for supporting fast handovers. This mechanism is also useful to prevent any man-in-the-middle-attacks.

Copyright 2006 WiMAX Forum
"WiMAX Forum™" and "WiMAX Forum CERTIFIED™" are trademarks of the WiMAX Forum™.

4. Advanced Features of Mobile WiMAX

4.1 Smart Antenna Technologies

Smart antenna technologies typically involve complex vector or matrix operations on signals due to multiple antennas. OFDMA allows smart antenna operations to be performed on vector-flat sub-carriers. Complex equalizers are not required to compensate for frequency selective fading. OFDMA therefore, is very well-suited to support smart antenna technologies. In fact, MIMO-OFDM/OFDMA is envisioned as the corner-stone for next generation broadband communication systems [11,12]. Mobile WiMAX supports a full range of smart antenna technologies to enhance system performance. The smart antenna technologies supported include:

- **Beamforming:** With beamforming [13], the system uses multiple-antennas to transmit weighted signals to improve coverage and capacity of the system and reduce outage probability.
- **Space-Time Code (STC):** Transmit diversity such as Alamouti code [14,15] is supported to provide spatial diversity and reduce fade margin.
- **Spatial Multiplexing (SM):** Spatial multiplexing [16,17] is supported to take advantage of higher peak rates and increased throughput. With spatial multiplexing, multiple streams are transmitted over multiple antennas. If the receiver also has multiple antennas, it can separate the different streams to achieve higher throughput compared to single antenna systems. With 2x2 MIMO, SM increases the peak data rate two-fold by transmitting two data streams. In UL, each user has only one transmit antenna, two users can transmit collaboratively in the same slot as if two streams are spatially multiplexed from two antennas of the same user. This is called UL collaborative SM.

The supported features in the Mobile WiMAX performance profile are listed in the following table.

Link	Beamforming	Space Time Coding	Spatial Multiplexing
DL	Nt≥2, Nr≥1[5]	Nt=2, Nr≥1 Matrix A	Nt=2, Nr≥2 Matrix B, vertical encoding
UL	Nt ≥1, Nr≥2	N/A	Nt=1, Nr≥2 Two-user collaborative SM

Table 5: Advanced Antenna Options

Mobile WiMAX supports adaptive switching between these options to maximize the benefit of smart antenna technologies under different channel conditions. For instance,

[5] Nt: number of transmit antennas; Nr: number of receive antennas

Copyright 2006 WiMAX Forum
"WiMAX Forum™" and "WiMAX Forum CERTIFIED™" are trademarks of the WiMAX Forum™.

SM improves peak throughput. However, when channel conditions are poor, the Packet Error Rate (PER) can be high and thus the coverage area where target PER is met may be limited. STC on the other hand provides large coverage regardless of the channel condition but does not improve the peak data rate. Mobile WiMAX supports Adaptive MIMO Switching (AMS) between multiple MIMO modes to maximize spectral efficiency with no reduction in coverage area. Figure 9 shows the architecture for supporting the smart antenna features. The following table provides a summary of the theoretical peak data rates for various DL/UL ratios assuming a 10 MHz channel bandwidth, 5 ms frame duration with 44 OFDM data symbols (out of 48 total OFDM symbols) and PUSC sub-channelization. With 2x2 MIMO, the DL user and sector peak data rate are theoretically doubled. The maximum DL peak data rate is 63.36 Mbps when all the data symbols are dedicated to DL. With UL collaborative SM, the UL sector peak data rate is doubled while the user peak data rate is unchanged. The UL user peak data rate and sector peak data rate are 14.11 Mbps and 28.22 Mbps respectively when all the data symbols are dedicated to UL. By applying different DL/UL ratio, the bandwidth can by adjusted between DL and UL to accommodate different traffic patterns. It should be noted that the extreme cases such as all DL and all UL partition are rarely used. The WiMAX profile supports DL/UL ratios ranging from 3:1 to 1:1 to accommodate different traffic profiles. The resulting peak data rates that will typically be encountered are in between the two extreme cases.

DL/UL Ratio			1:0	3:1	2:1	3:2	1:1	0:1
User Peak Rate (Mbps)	SIMO (1x2)	DL	31.68	23.04	20.16	18.72	15.84	0
		UL	0	4.03	5.04	6.05	7.06	14.11
	MIMO (2x2)	DL	63.36	46.08	40.32	37.44	31.68	0
		UL	0	4.03	5.04	6.05	7.06	14.11
Sector Peak Rate (Mbps)	SIMO (1x2)	DL	31.68	23.04	20.16	18.72	15.84	0
		UL	0	4.03	5.04	6.05	7.06	14.11
	MIMO (2x2)	DL	63.36	46.08	40.32	37.44	31.68	0
		UL	0	8.06	10.08	12.10	14.12	28.22

Table 6: Data Rates for SIMO/MIMO Configurations[6]
(For 10 MHz channel, 5 ms frame, PUSC sub-channel, 44 data OFDM symbols)

[6] Peak rate is often used to describe channel capacity and is a good metric for comparative purposes. It should be noted however, that in practice the achievable peak data rates may be lower due to the specific traffic, propagation, and interference conditions encountered.

Copyright 2006 WiMAX Forum
"WiMAX Forum™" and "WiMAX Forum CERTIFIED™" are trademarks of the WiMAX Forum™.

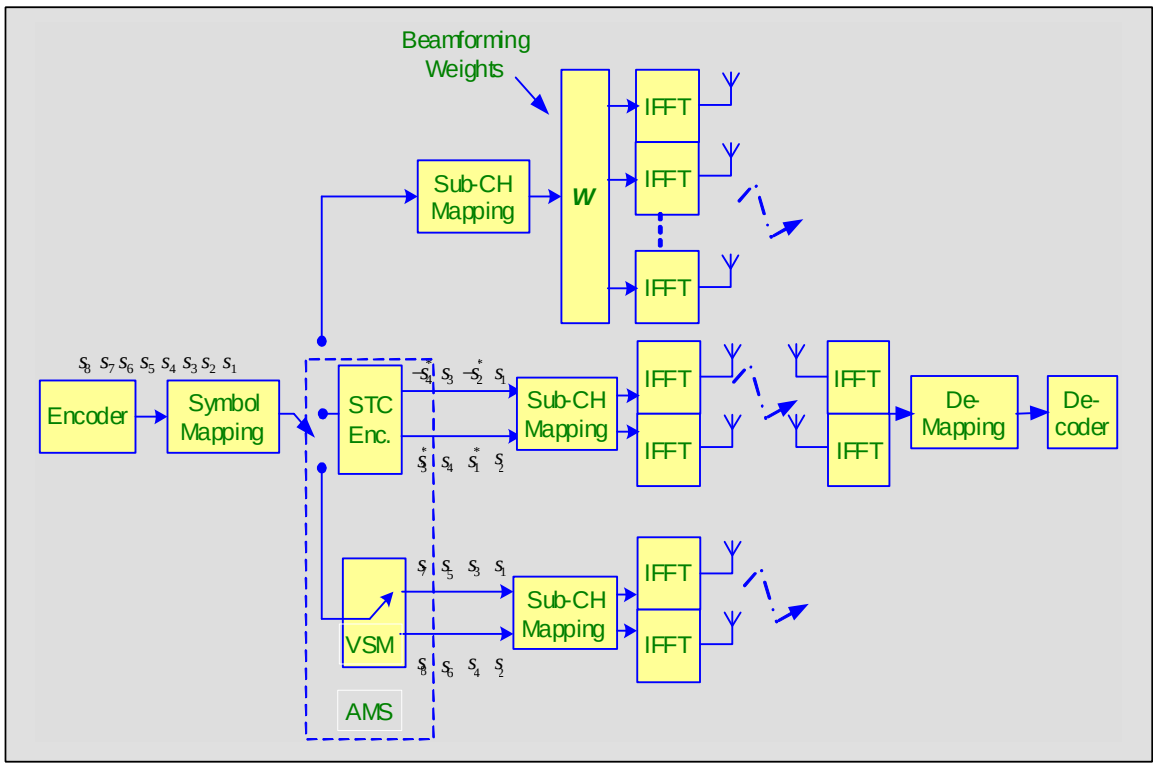

Figure 9: Adaptive Switching for Smart Antennas

4.2 Fractional Frequency Reuse

Mobile WiMAX supports frequency reuse of one, i.e. all cells/sectors operate on the same frequency channel to maximize spectral efficiency. However, due to heavy co-channel interference (CCI) in frequency reuse one deployment, users at the cell edge may suffer degradation in connection quality. With Mobile WiMAX, users operate on sub-channels, which only occupy a small fraction of the whole channel bandwidth; the cell edge interference problem can be easily addressed by appropriately configuring sub-channel usage without resorting to traditional frequency planning.

In Mobile WiMAX, the flexible sub-channel reuse is facilitated by sub-channel segmentation and permutation zone. A segment is a subdivision of the available OFDMA sub-channels (one segment may include all sub-channels). One segment is used for deploying a single instance of MAC.

Permutation Zone is a number of contiguous OFDMA symbols in DL or UL that use the same permutation. The DL or UL sub-frame may contain more than one permutation zone as shown in the following figure.

Copyright 2006 WiMAX Forum
"WiMAX Forum™" and "WiMAX Forum CERTIFIED™" are trademarks of the WiMAX Forum™.

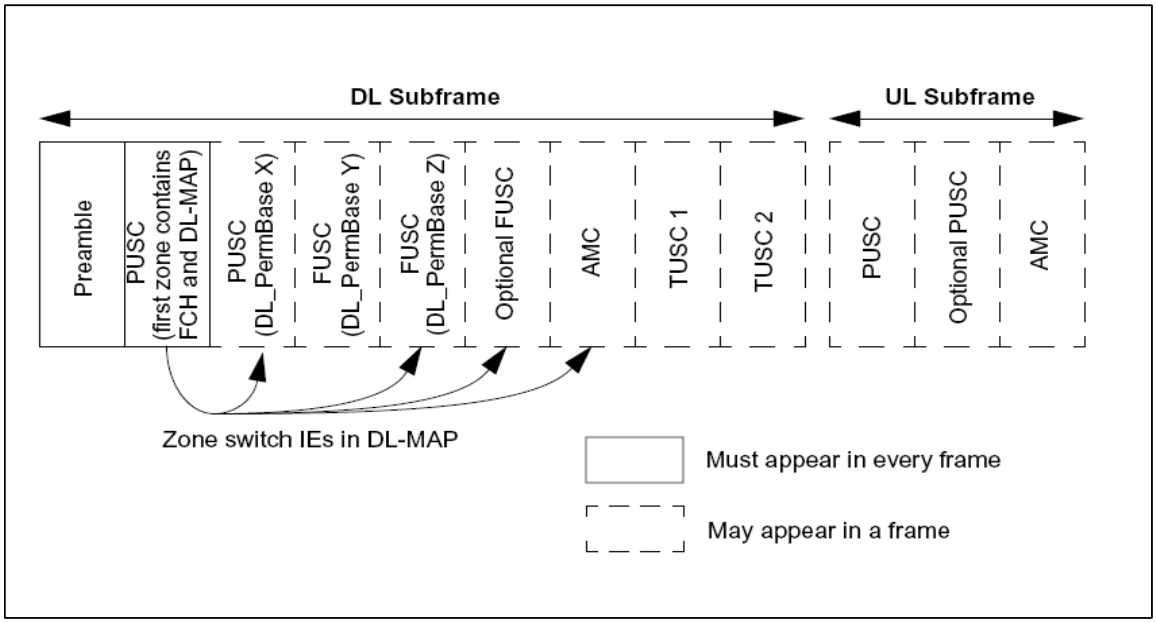

Figure 10: Multi-Zone Frame Structure

The sub-channel reuse pattern can be configured so that users close to the base station operate on the zone with all sub-channels available. While for the edge users, each cell or sector operates on the zone with a fraction of all sub-channels available. In Figure 11, F1, F2, and F3 represent different sets of sub-channels in the same frequency channel. With this configuration, the full load frequency reuse one is maintained for center users to maximize spectral efficiency and fractional frequency reuse is implemented for edge users to assure edge-user connection quality and throughput. The sub-channel reuse planning can be dynamically optimized across sectors or cells based on network load and interference conditions on a frame by frame basis. All the cells and sectors therefore, can operate on the same frequency channel without the need for frequency planning.

Copyright 2006 WiMAX Forum
"WiMAX Forum™" and "WiMAX Forum CERTIFIED™" are trademarks of the WiMAX Forum™.

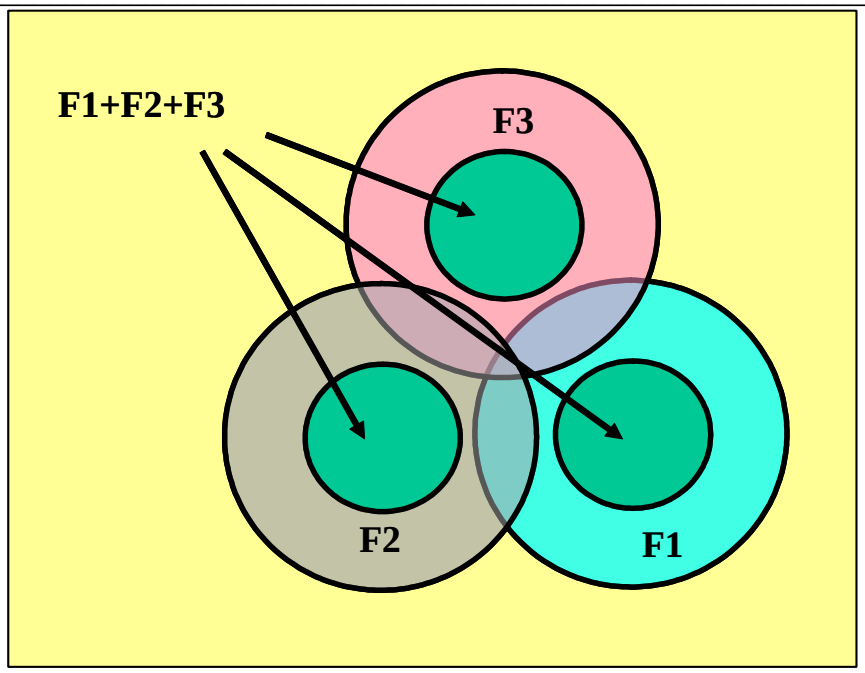

Figure 11: Fractional Frequency Reuse

4.3 Multicast and Broadcast Service (MBS)

Multicast and Broadcast Service (MBS) supported by Mobile WiMAX combines the best features of DVB-H, MediaFLO and 3GPP E-UTRA and satisfies the following requirements:

- High data rate and coverage using a Single Frequency Network (SFN)
- Flexible allocation of radio resources
- Low MS power consumption
- Support of data-casting in addition to audio and video streams
- Low channel switching time

The Mobile WiMAX Release-1 profile defines a toolbox for initial MBS service delivery. The MBS service can be supported by either constructing a separate MBS zone in the DL frame along with unicast service (embedded MBS) or the whole frame can be dedicated to MBS (DL only) for standalone broadcast service. Figure 12 shows the DL/UL zone construction when a mix of unicast and broadcast service are supported. The MBS zone supports multi-BS MBS mode using Single Frequency Network (SFN) operation and flexible duration of MBS zones permits scalable assignment of radio resources to MBS traffic. It may be noted that multiple MBS zones are also feasible. There is one MBS zone MAP IE descriptor per MBS zone. The MS accesses the DL MAP to initially identify MBS zones and locations of the associated MBS MAPs in each zone. The MS

Copyright 2006 WiMAX Forum
"WiMAX Forum™" and "WiMAX Forum CERTIFIED™" are trademarks of the WiMAX Forum™.

can then subsequently read the MBS MAPs without reference to DL MAP unless synchronization to MBS MAP is lost. The MBS MAP IE specifies MBS zone PHY configuration and defines the location of each MBS zone via the OFDMA Symbol Offset parameter. The MBS MAP is located at the 1st sub-channel of the 1st OFDM symbol of the associated MBS zone. The multi-BS MBS does not require the MS be registered to any base station. MBS can be accessed when MS in Idle mode to allow low MS power consumption. The flexibility of Mobile WiMAX to support integrated MBS and uni-cast services enables a broader range of applications.

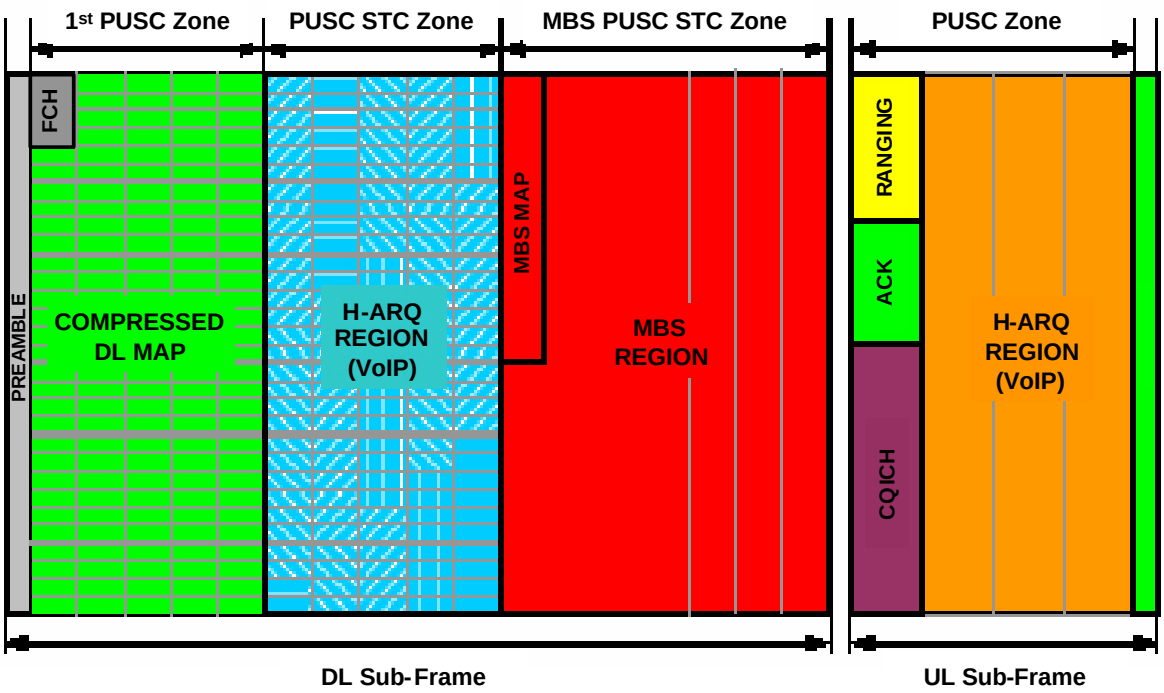

Figure 12: Embedded MBS Support with Mobile WiMAX – MBS Zones

5. Mobile WiMAX System Performance Evaluation

5.1 Mobile WiMAX System Parameters

Since Mobile WiMAX is based on scalable OFDMA, it can be flexibly configured to operate on different bandwidths by adjusting system parameters. We consider a Mobile WiMAX system with the following characteristics as a case study for a quantitative evaluation of Mobile WiMAX system performance. In the following tables, Table 7 provides the system parameters, Table 8 summarizes the OFDMA parameters, and Table 9 shows the propagation model used for the performance evaluation.

Copyright 2006 WiMAX Forum
"WiMAX Forum™" and "WiMAX Forum CERTIFIED™" are trademarks of the WiMAX Forum™.

Parameters	Value
Number of 3-Sector Cells	19
Operating Frequency	2500 MHz
Duplex	TDD
Channel Bandwidth	10 MHz
BS-to-BS Distance	2.8 kilometers
Minimum Mobile-to-BS Distance	36 meters
Antenna Pattern	70° (-3 dB) with 20 dB front-to-back ratio
BS Height	32 meters
Mobile Terminal Height	1.5 meters
BS Antenna Gain	15 dBi
MS Antenna Gain	-1 dBi
BS Maximum Power Amplifier Power	43 dBm
Mobile Terminal Maximum PA Power	23 dBm
# of BS Tx/Rx Antenna	Tx: 2 or 4; Rx: 2 or 4
# of MS Tx/Rx Antenna	Tx: 1; Rx: 2
BS Noise Figure	4 dB
MS Noise Figure	7 dB

Table 7: Mobile WiMAX System Parameters

Parameters		Values
System Channel Bandwidth (MHz)		10
Sampling Frequency (F_p in MHz)		11.2
FFT Size (N_{FFT})		1024
Sub-Carrier Frequency Spacing		10.94 kHz
Useful Symbol Time ($T_b = 1/f$)		91.4 microseconds
Guard Time ($T_g = T_b/8$)		11.4 microseconds
OFDMA Symbol Duration ($T_s = T_b + T_g$)		102.9 microseconds
Frame duration		5 milliseconds
Number of OFDMA Symbols		48
DL PUSC	Null Sub-carriers	184
	Pilot Sub-carriers	120
	Data Sub-carriers	720
	Sub-channels	30

Copyright 2006 WiMAX Forum
"WiMAX Forum™" and "WiMAX Forum CERTIFIED™" are trademarks of the WiMAX Forum™.

Parameters		Values
UL PUSC	Null Sub-carriers	184
	Pilot Sub-carriers	280
	Data Sub-carriers	560
	Sub-channels	35

Table 8: OFDMA Parameters

Parameters	Value
Propagation Model	COST 231 Suburban
Log-Normal Shadowing SD (σs)	8 dB
BS Shadowing Correlation	0.5
Penetration Loss	10 dB

Table 9: Propagation Model

5.2 Mobile WiMAX Link Budget

The following link budget calculation is based on the system parameters and channel propagation model in Table 7-9 in section 5.1. The value of 5.56 dB used for the Shadow Fade margin in the table assures a 75% coverage probability at the cell edge and 90% coverage probability over the entire area. The interference margin is 2 dB for DL and 3 dB for UL respectively assuming a frequency reuse (1, 1, 3)[7]. The interference margin can be reduced to 0.2 dB for a (1, 3, 3) reuse pattern but at the cost of reduced spectral efficiency. The Macro diversity gain is 4 dB assuming a 0.5 shadow fading correlation. The cell range can be estimated from the link budget using any one of a number of propagation models such as COST 231-Hata propagation model and Erceg-Greenstein model. The COST 231-Hata propagation model is based on empirical results in the 2 GHz band and tends to make very conservative prediction for 2.5 GHz. The Erceg-Greenstein model is another model commonly used in this frequency band and predicts ranges that are approximately 70% greater. Also note that the maximum allowable path loss, 128.2 dB, corresponds to a DL cell-edge data rate of 5.76 Mbps and an UL cell-edge data rate of 115 kbps; much higher data rates than 3G systems. Higher data rate at the cell edge and higher carrier frequency results in smaller cell size. Alternatively, better link budget and larger cell size can be achieved at lower cell edge data rates, as shown in Tables 10 and 11.

[7] Frequency reuse pattern is denoted as (c, n, s); where c is the number of BS sites per cluster, n is the number of unique frequency channels required for reuse, and s is the number of sectors per BS site.

Copyright 2006 WiMAX Forum
"WiMAX Forum™" and "WiMAX Forum CERTIFIED™" are trademarks of the WiMAX Forum™.

Mobile WiMAX Downlink				
Base Station Infrastructure	**MAP**	**Traffic-PUSC**		**Units**
Tx Power per Antenna Element	10.0	10.0	10.0	Watts
Number of Tx Antenna Elements	2	2	2	
Cyclic Combining Gain	3.0	3.0	3.0	dB
Tx Antenna Gain	15.0	15.0	15.0	dBi
Pilot Power Boosting Gain	-0.7	-0.7	-0.7	dB
EIRP	57.3	57.3	57.3	dBm
Base Permutation Zone	**PUSC**	**PUSC**	**PUSC**	
Number of Occupied Sub-Carriers	840	840	840	
Power per Occupied Sub-Carrier	28.1	28.1	28.1	dBm
Mobile Unit, (Handset Indoor)				
Rx Antenna Gain	-1.0	-1.0	-1.0	dBi
Rx Antenna Diversity Gain (2 Antennas)	3.0	3.0	3.0	dB
Rx Noise Figure	7.0	7.0	7.0	dB
Margins				
Log Normal Fade Margin	5.56	5.56	5.56	dB
Fast Fading Margin	6.0	2.0	2.0	dB
Interference Margin	2.0	2.0	2.0	dB
Penetration Loss	10.0	10.0	10.0	dB
Total Margin	**23.56**	**19.56**	**19.56**	**dB**
Mobile Rx Sensitivity				
Thermal Noise	-174	-174	-174	dBm/Hz
Sub-Carrier Spacing	10.94	10.94	10.94	kHz
Modulation	QPSK 1/8	QPSK 1/2	16QAM 1/2	
SNR Required	-3.31	3.49	8.93	dB
Delta from limiting cell range distance	0.82			
DL Traffic Data Rate		**2.88**	**5.76**	**Mbps**
Rx Sensitivity (per sub-carrier)	-129.9	-123.2	-117.7	dBm
Rx Sensitivity (composite)	-100.7	-93.9	-88.4	dBm
System Gain	**160.0**	**153.3**	**147.8**	**dB**
Maximum Allowable Path Loss	**136.4**	**133.7**	**128.2**	**dB**

Table 10: DL Link Budget for Mobile WiMAX

Mobile Unit, (Handset Indoor)	FB Channel	Traffic Full Allocation		Units
Tx Power per Antenna Element	200	200	200	mw
Number of Tx Antenna Elements	1	1	1	
Tx Antenna Gain	-1.0	-1.0	-1.0	dBi
EIRP	22.0	22.0	22.0	dBm

Copyright 2006 WiMAX Forum
"WiMAX Forum™" and "WiMAX Forum CERTIFIED™" are trademarks of the WiMAX Forum™.

Mobile Unit, (Handset Indoor)	FB Channel	Traffic Full Allocation		Units
Permutation Zone	**FB Channel**	**PUSC**	**PUSC**	
Available Sub-Carriers	70	840	840	
Allocated Sub-Channels	2.5	3	9	
Allocated Sub-Carriers	70	72	216	
Allocated Data Carriers	60	48	144	
Power per Occupied Sub-Carrier	3.56	3.44	-1.33	dBm
Base Station Rx				
Rx Antenna Gain	15.0	15.0	15	dBi
Rx Antenna Diversity Gain	3.0	3.0	3.0	dBi
Rx Noise Figure	4.0	4.0	4.0	dB
Margins				
Log Normal Fade Margin	5.56	5.56	5.56	dB
Fast Fading Margin	4.0	2.0	2.0	dB
Interference Margin	3.0	3.0	3.0	dB
Penetration Loss	10.0	10.0	10.0	dB
Total Margin	**22.56**	**20.56**	**20.56**	**dB**
Base Station Rx Sensitivity				
Thermal Noise	-174	-174	-174	dBm/Hz
Sub-Carrier Spacing	10.94	10.94	10.94	kHz
Modulation Type	Ranging	QPSK 1/8	QPSK 1/8	
SNR Required	-6.0	-2.5	-2.5	dB
Delta from limiting cell range distance	0.66			
UL Traffic Data Rate		**38**	**115**	**kbps**
Rx Sensitivity (per sub-carrier)	-135.6	-132.1	-132.1	dBm
Rx Sensitivity (composite)	-117.2	-113.6	-108.8	dBm
System Gain	**157.2**	**153.5**	**148.8**	**dB**
Maximum Allowable Path Loss	**134.6**	**133.0**	**128.2**	**dB**

Table 11: UL Link Budget for Mobile WiMAX

5.3 Mobile WiMAX MAP Reliability and Overhead

Mobile WiMAX control information is in the format of MAP messages at the beginning of each frame. The MAP messages controls the DL and UL allocation. The MAP messages allow flexible control of resource allocation in both DL and UL to improve spectral efficiency and QoS.

Since the MAP messages contain the resource allocation information for the whole frame, the reliability of MAP messages is critical to the system performance. The DL control channel coverage was simulated using the simulation configuration shown

Copyright 2006 WiMAX Forum
"WiMAX Forum™" and "WiMAX Forum CERTIFIED™" are trademarks of the WiMAX Forum™.

previously with and without Cyclic Shift Transmit Diversity (CSTD) [18]. CSTD is an adaptation of the idea of delay diversity to OFDM systems. With CSTD, each antenna element in transmit array sends a circularly shifted version of the same OFDM time-domain symbol (for symbol b), $x(n, b)$ ($0 \le n \le N$-1, where N is the system FFT size). For example if there are M_b transmit antennas at the base station and if antenna 1 sends an un-shifted version of the OFDM symbol, then antenna m transmits the same OFDM symbol, but circularly shifted by $(m-1)D$ time-domain samples. Note that each antenna adds a cyclic prefix after circularly shifting the OFDM symbol and thus the delay-spread protection offered by the cyclic prefix is unaffected by the CSTD.

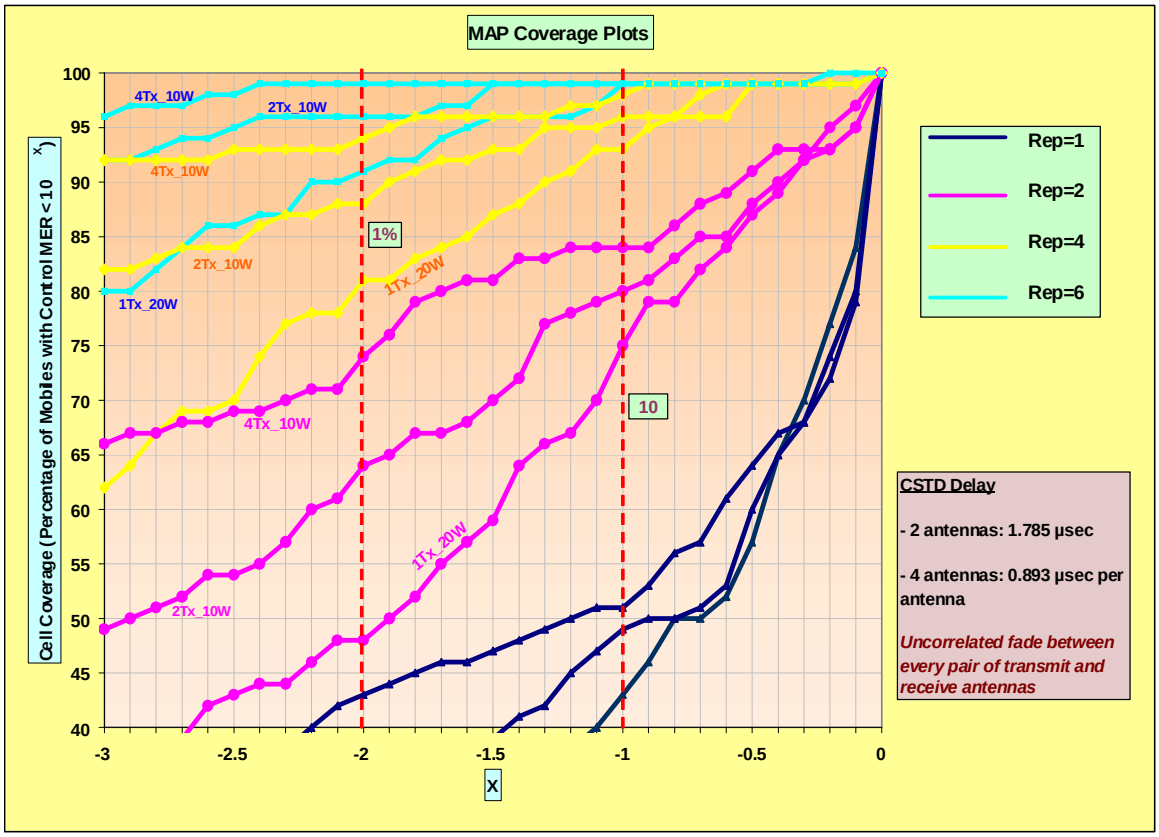

Figure 13: Simulated Performance of Control Channel Coverage for TU Channel

Figure 13 shows the Cumulative Distribution Function (CDF) of the control channel coverage for various repetition rates with 1, 2, and 4 antennas using the propagation model defined in Table 9. It may be observed from the figure that using CSTD with 2 transmit and receive antennas, R=1/2 CTC code with repetition of 6, approximately 95% cell coverage is achieved at PER operating point of 1%. It should be noted that MAP

Copyright 2006 WiMAX Forum
"WiMAX Forum™" and "WiMAX Forum CERTIFIED™" are trademarks of the WiMAX Forum™.

performance can be further enhanced by using an Interference Canceller at the mobile unit.

The MAP message size is variable. It varies with the number of allocated users in a frame. When the network is dominated by bursty data traffic such as FTP and HTTP traffic, the number of users being scheduled per-frame is typically small (less than 10). In this case, the resource allocation is done most efficiently and the MAP message mainly contains the fixed MAP overhead. The MAP overhead in this scenario is typically about 10% in a 10 MHz channel with a 5 millisecond frame size. When the network is dominated by VoIP traffic, the number of users scheduled per-frame may be large. The MAP overhead increases linearly as the number of scheduled users increases.

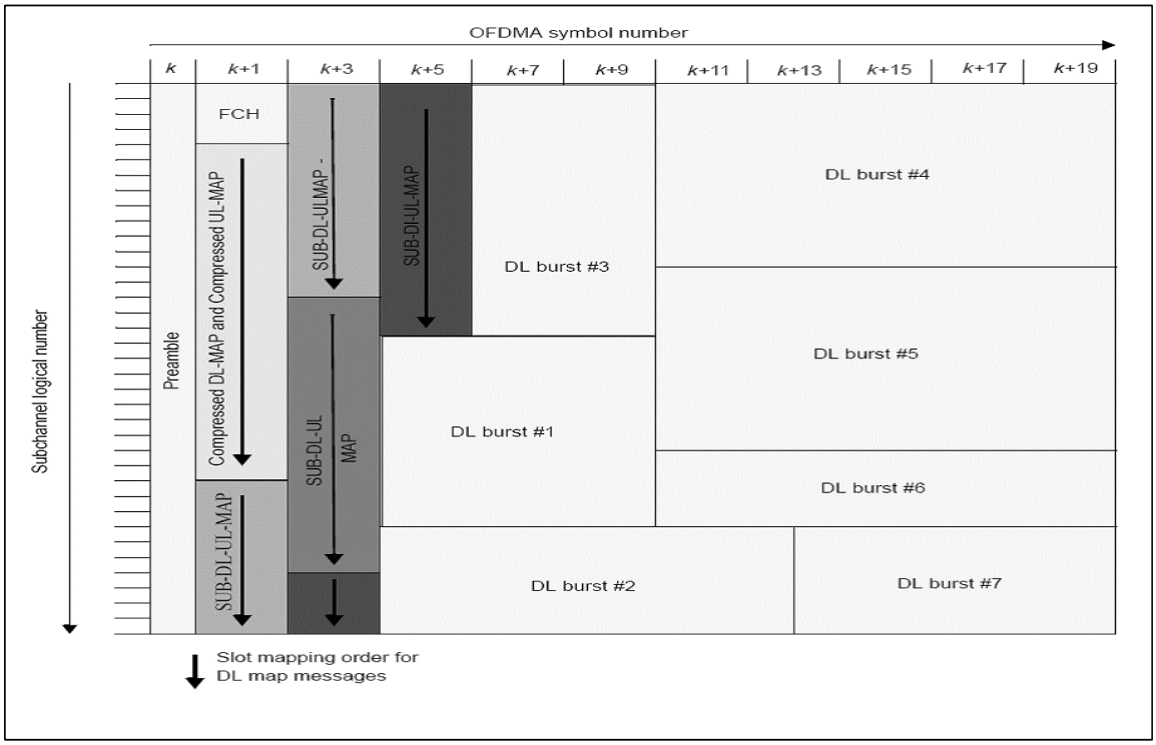

Figure 14: Sub-MAP Burst

To control the MAP overhead, Mobile WiMAX introduces multicast sub-MAPs, which allow multiple sub-MAP messages to be sent at different data rates to users with different SINR. Therefore, while the broadcast messages are sent at the highest reliability needed to meet the cell edge coverage, the common control messages, e.g. traffic allocations, can be delivered more efficiently according to the user SINR condition. As shown in Figure 13, a large percentage of the coverage area can support higher data rate than QPSK 1/12 at 1% PER (almost 60% for QPSK 1/4). Therefore, with multi-cast sub-MAP messages,

Copyright 2006 WiMAX Forum
"WiMAX Forum™" and "WiMAX Forum CERTIFIED™" are trademarks of the WiMAX Forum™.

the control overhead can be significantly reduced. Even with a large number of users (20 users in DL and 20 users in UL) in a frame, the MAP overhead is less than 20%. Therefore, the Mobile WiMAX control message is very flexible for data communication. It has sufficient reliability and low to moderate overhead depending on the network load and applications being served.

5.4 WiMAX System Performance

Simulations based on the 1xEVDV evaluation methodology [19,20] have been performed to assess the performance of Mobile WiMAX. The system parameters for the Mobile WiMAX system are described in Tables 7, 8, and 9 in Section 5.1. The performance simulation assumes heterogeneous users with a mix of mobile users as described in Tables 12 and 13.

Channel Model	Path 1 (dB)	Path 2 (dB)	Path 3 (dB)	Path 4 (dB)	Path 5 (dB)	Path 6 (dB)	Rake Fingers
ITU Ped. B Ch-103	-3.92	-4.82	-8.82	-11.92	-11.72	-27.82	1,2,3,4,5,6
ITU Veh. A Ch-104	-3.14	-4.14	-12.14	-13.14	-18.14	-23.14	1,2,3,4,5,6

Table 12: Multi-Path Channel Models for Performance Simulation

Channel Model	Number of Paths	Speed	Fading	Assignment Probability
ITU Ped. B Ch-103	6	3 km/hr	Jakes	0.60
ITU Veh. A Ch-104	6	30 km/hr	Jakes	0.30
	6	120 km/hr	Jakes	0.10

Table 13: Mixed User Channel Model for Performance Simulation

There are 10 users per sector. The traffic is assumed to be full buffer FTP traffic. Proportional Fair scheduler is assumed. Each base station is configured with three (3) sectors with a cell and sector frequency reuse factor equal to one. Ideal channel estimation and realistic link adaptation is also assumed. The carrier frequency for the Mobile WiMAX simulation is 2.5 GHz The frame overhead to account for Preamble, MAP OH, and UL Control Channel is 7 OFDMA symbols in the DL and 3 in the UL. 1 symbol is allocated for TTG for a total of 11 overhead symbols and 37 data symbols for both DL and UL. Further configuration and assumption details are listed in Table 14.

Copyright 2006 WiMAX Forum
"WiMAX Forum™" and "WiMAX Forum CERTIFIED™" are trademarks of the WiMAX Forum™.

Parameters		Value
Cell Configuration		3 Sectors/Cell
Frequency Reuse		1, 1, 3
Users/Sector		10
Traffic Type		Full Buffer
Channel Estimation		Ideal
PHY Abstraction		EESM [21]
Scheduler		Proprietary Proportional Fair
Link Adaptation		Realistic with delay feedback
Antenna Configuration		1x2, 2x2
MIMO Support	DL	Alamouti STC, VSM
	UL	Collaborative SM
MIMO Switch		Adaptive STC/VSM switch
HARQ		CC, 3 Retransmissions
Coding		CTC
Frame Overhead		11 OFDM Symbols (7 DL, 3 UL, 1 TTG)
Data Symbols per Frame		37
DL/UL Partition	A	28:9
	B	22:15

Table 14: Mobile WiMAX Configuration Assumptions

The performance is summarized in Table 15 for a TDD implementation with a 10 MHz channel bandwidth, SIMO and MIMO antenna configurations and DL/UL ratios of 28:9 and 22:15 respectively. The results show that the Mobile WiMAX system has high spectral efficiency. With two receive antennas, the DL sector spectral efficiency is about 1.2 bits/sec/Hz and UL sector spectral efficiency is 0.55 bits/sec/Hz. With 2x2 MIMO, the spectral efficiency is further improved by 55% to 60% in the DL and about 35% in the UL. The high spectral efficiency combined with wide channel bandwidth provides very high sector throughput for the Mobile WiMAX system. With 2x2 MIMO and a DL/UL ratio of 3:1, the DL sector throughput is 13.60 Mbps and the UL sector throughput is 1.83 Mbps; with a DL/UL ratio of 3:2, the sector throughput is 10.63 Mbps and 3.05 Mbps respectively for DL and UL. The high sector data throughput is essential to enable broadband data services including video and VoIP.

Copyright 2006 WiMAX Forum
"WiMAX Forum™" and "WiMAX Forum CERTIFIED™" are trademarks of the WiMAX Forum™.

It should be noted that 11 symbols of overhead is a conservative estimate for overhead. For most data applications, the traffic is bursty and WiMAX can operate more efficiently with less overhead. Additionally, the sub-channel considered for this case is PUSC diversity sub-channelizaiton and frequency selective scheduling gain is not taken into account in the simulation. With frequency selective AMC sub-channelization, the spectral efficiency can be further increased by 15 to 25% [22]. Therefore, with an optimized Mobile WiMAX system, the spectral efficiency and throughput can be further improved by 20 to 30% compared to the results shown in Table 15. The spectral efficiency improvement for this case is illustrated in Figure 15 for the 2x2 MIMO antenna configuration.

Cases		DL: 28 data symbols UL: 9 data symbols		DL: 22 data symbols UL: 15 data symbols	
Antenna	Link	Sector Throughput	Spectral Efficiency	Sector Throughput	Spectral Efficiency
SIMO	DL	8.8 Mbps	1.19 bps/Hz	6.6 Mbps	1.07 bps/Hz
	UL	1.38 Mbps	0.53 bps/Hz	2.20 Mbps	0.57 bps/Hz
MIMO	DL	13.60 Mbps	1.84 bps/Hz	10.63 Mbps	1.73 bps/Hz
	UL	1.83 Mbps	0.70 bps/Hz	3.05 Mbps	0.79 bps/Hz

Table 15: Mobile WiMAX System Performance

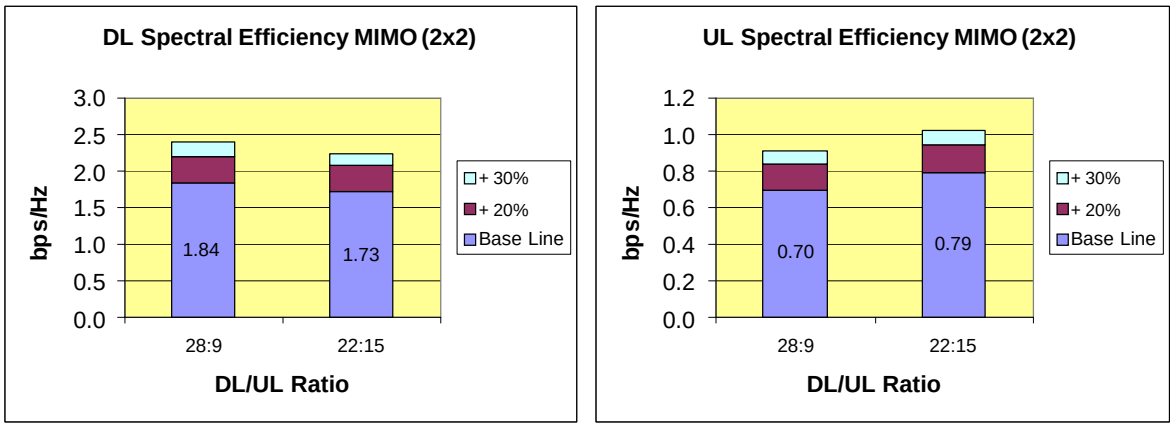

Figure 15: Spectral Efficiency Improvement with Optimized WiMAX

Copyright 2006 WiMAX Forum
"WiMAX Forum™" and "WiMAX Forum CERTIFIED™" are trademarks of the WiMAX Forum™.

Another advantage of the Mobile WiMAX system is its ability to dynamically reconfigure the DL/UL ratio to adapt to the network traffic profile so as to maximize spectrum utilization. This is illustrated in Figure 16 where the cross-hatched bars represent the base line values shown in Table 15. It shows that the maximum DL sector throughput can be greater than 20 Mbps and maximum UL sector throughput can be greater than 8 Mbps. With a typical DL/UL ratio range between 3:1 and 1:1, the DL sector throughput can vary between 10 Mbps and 17 Mbps; the UL sector throughput can vary between 2 Mbps and 4 Mbps.

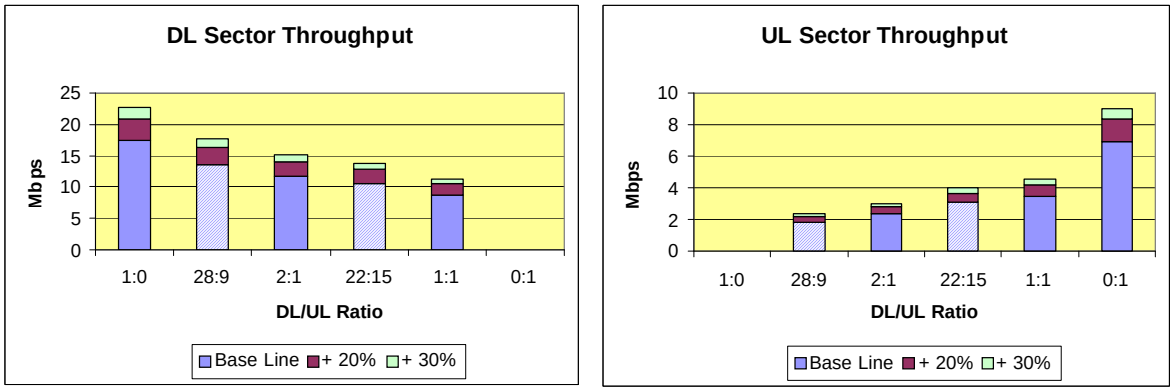

Figure 16: Throughput with Varied DL/UL Ratios and Optimized WiMAX

The results here are based on the Mobile WiMAX basic MIMO (2x2) configuration, further performance improvements can be realized with additional advanced Mobile WiMAX features such as AAS.

6. End-to-End WiMAX Architecture

The IEEE only defined the Physical (PHY) and Media Access Control (MAC) layers in 802.16. This approach has worked well for technologies such as Ethernet and WiFi, which rely on other bodies such as the IETF (Internet Engineering Task Force) to set the standards for higher layer protocols such as TCP/IP, SIP, VoIP and IPSec. In the mobile wireless world, standards bodies such as 3GPP and 3GPP2 set standards over a wide range of interfaces and protocols because they require not only airlink interoperability, but also inter-vendor inter-network interoperability for roaming, multi-vendor access networks, and inter-company billing. Vendors and operators have recognized this issue, and have formed additional working groups to develop standard network reference models for open inter-network interfaces. Two of these are the WiMAX Forum's Network Working Group, which is focused on creating higher-level networking specifications for fixed, nomadic, portable and mobile WiMAX systems beyond what is defined in the IEEE 802.16 standard, and Service Provider Working Group which helps write requirements and prioritizes them to help drive the work of the Network WG.

Copyright 2006 WiMAX Forum
"WiMAX Forum™" and "WiMAX Forum CERTIFIED™" are trademarks of the WiMAX Forum™.

The Mobile WiMAX End-to-End Network Architecture is based on an All-IP platform, all packet technology with no legacy circuit telephony. It offers the advantage of reduced total cost of ownership during the lifecycle of a WiMAX network deployment. The use of All-IP means that a common network core can be used, without the need to maintain both packet and circuit core networks, with all the overhead that goes with it. A further benefit of All-IP is that it places the network on the performance growth curve of general purpose processors and computing devices, often termed "Moore's Law". Computer processing advances occur much faster than advances in telecommunications equipment because general purpose hardware is not limited to telecommunications equipment cycles, which tend to be long and cumbersome. The end result is a network that continually performs at ever higher capital and operational efficiency, and takes advantage of 3rd party developments from the Internet community. This results in lower cost, high scalability, and rapid deployment since the networking functionality is all primarily software-based services.

In order to deploy successful and operational commercial systems, there is need for support beyond 802.16 (PHY/MAC) air interface specifications. Chief among them is the need to support a core set of networking functions as part of the overall End-to-End WiMAX system architecture [4]. Before delving into some of the details of the architecture, we first note a few basic tenets that have guided the WiMAX architecture development.

1. The architecture is based on a packet-switched framework, including native procedures based on the IEEE 802.16 standard and its amendments, appropriate IETF RFCs and Ethernet standards.
2. The architecture permits decoupling of access architecture (and supported topologies) from connectivity IP service. Network elements of the connectivity system are agnostic to the IEEE 802.16 radio specifics.
3. The architecture allows modularity and flexibility to accommodate a broad range of deployment options such as:
    - Small-scale to large-scale (sparse to dense radio coverage and capacity) WiMAX networks
    - Urban, suburban, and rural radio propagation environments
    - Licensed and/or licensed-exempt frequency bands
    - Hierarchical, flat, or mesh topologies, and their variants
    - Co-existence of fixed, nomadic, portable and mobile usage models

Support for Services and Applications: The end-to-end architecture includes the support for: a) Voice, multimedia services and other mandated regulatory services such as emergency services and lawful interception, b) Access to a variety of independent Application Service Provider (ASP) networks in an agnostic manner, c) Mobile telephony

Copyright 2006 WiMAX Forum
"WiMAX Forum™" and "WiMAX Forum CERTIFIED™" are trademarks of the WiMAX Forum™.

communications using VoIP, d) Support interfacing with various interworking and media gateways permitting delivery of incumbent/legacy services translated over IP (for example, SMS over IP, MMS, WAP) to WiMAX access networks and e) Support delivery of IP Broadcast and Multicast services over WiMAX access networks.

Interworking and Roaming is another key strength of the End-to-End Network Architecture with support for a number of deployment scenarios. In particular, there will be support of a) Loosely-coupled interworking with existing wireless networks such as 3GPP and 3GPP2 or existing wireline networks such as DSL and MSO, with the interworking interface(s) based on a standard IETF suite of protocols, b) Global roaming across WiMAX operator networks, including support for credential reuse, consistent use of AAA for accounting and billing, and consolidated/common billing and settlement, c) A variety of user authentication credential formats such as username/password, digital certificates, Subscriber Identify Module (SIM), Universal SIM (USIM), and Removable User Identify Module (RUIM).

WiMAX Forum industry participants have identified a WiMAX Network Reference Model (NRM) that is a logical representation of the network architecture. The NRM identifies functional entities and reference points over which interoperability is achieved between functional entities. The architecture has been developed with the objective of providing unified support of functionality needed in a range of network deployment models and usage scenarios (ranging from fixed – nomadic – portable – simple mobility – to fully mobile subscribers).

Figure 17 illustrates the NRM, consisting of the following logical entities: MS, ASN, and CSN and clearly identified reference points for interconnection of the logical entities. The figure depicts the key normative reference points R1-R5. Each of the entities, MS, ASN and CSN represent a grouping of functional entities. Each of these functions may be realized in a single physical device or may be distributed over multiple physical devices. The grouping and distribution of functions into physical devices within a functional entity (such as ASN) is an implementation choice; a manufacturer may choose any physical implementation of functions, either individually or in combination, as long as the implementation meets the functional and interoperability requirements.

The intent of the NRM is to allow multiple implementation options for a given functional entity, and yet achieve interoperability among different realizations of functional entities. Interoperability is based on the definition of communication protocols and data plane treatment between functional entities to achieve an overall end-to-end function, for example, security or mobility management. Thus, the functional entities on either side of a reference point represent a collection of control and bearer plane end-points.

Copyright 2006 WiMAX Forum
"WiMAX Forum™" and "WiMAX Forum CERTIFIED™" are trademarks of the WiMAX Forum™.

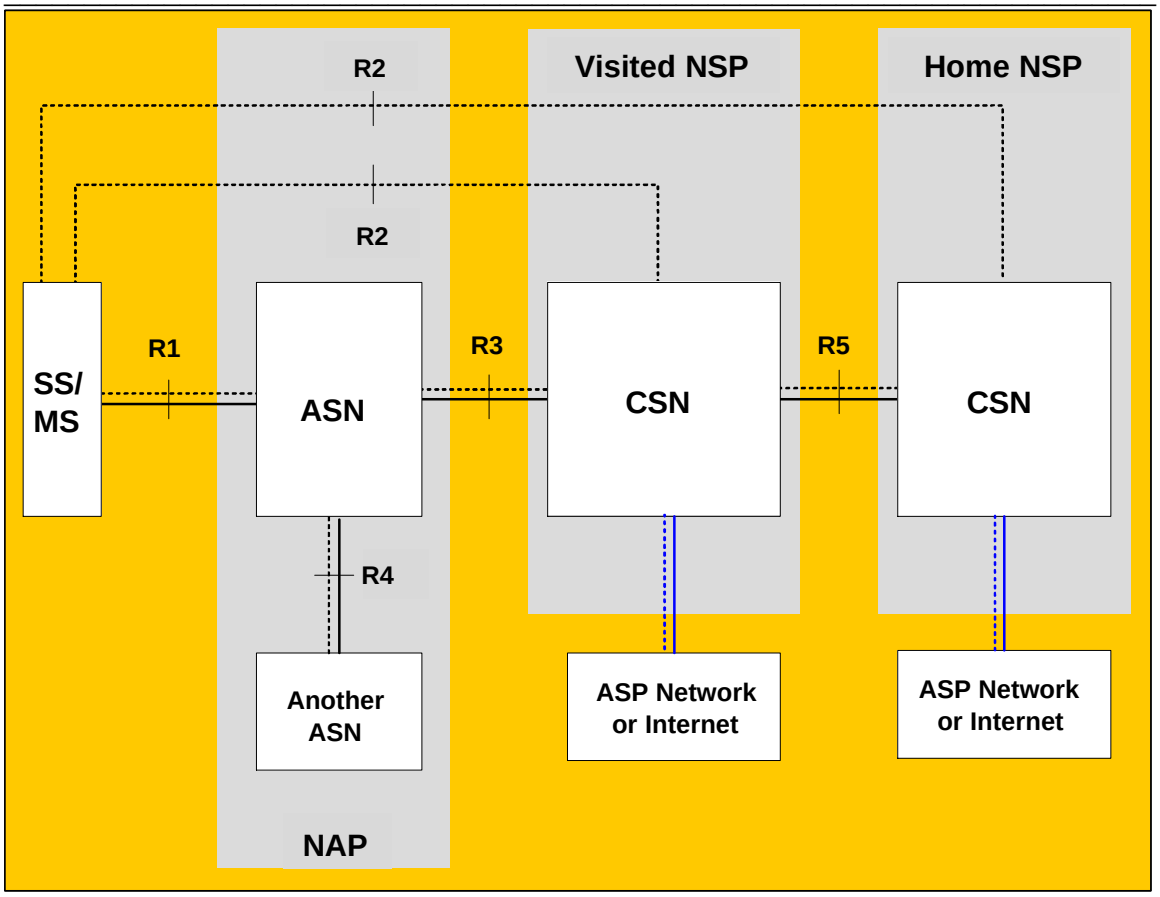

Figure 17: WiMAX Network Reference Model

The ASN defines a logical boundary and represents a convenient way to describe aggregation of functional entities and corresponding message flows associated with the access services. The ASN represents a boundary for functional interoperability with WiMAX clients, WiMAX connectivity service functions and aggregation of functions embodied by different vendors. Mapping of functional entities to logical entities within ASNs as depicted in the NRM may be performed in different ways. The WiMAX Forum is in the process of network specifications in a manner that would allow a variety of vendor implementations that are interoperable and suited for a wide diversity of deployment requirements.

Connectivity Service Network (CSN) is defined as a set of network functions that provide IP connectivity services to the WiMAX subscriber(s). A CSN may comprise network elements such as routers, AAA proxy/servers, user databases and Interworking gateway devices. A CSN may be deployed as part of a Greenfield WiMAX Network Service Provider (NSP) or as part of an incumbent WiMAX NSP.

Copyright 2006 WiMAX Forum
"WiMAX Forum™" and "WiMAX Forum CERTIFIED™" are trademarks of the WiMAX Forum™.

Figure 18 provides a more basic view of the many entities within the functional groupings of ASN and CSN.

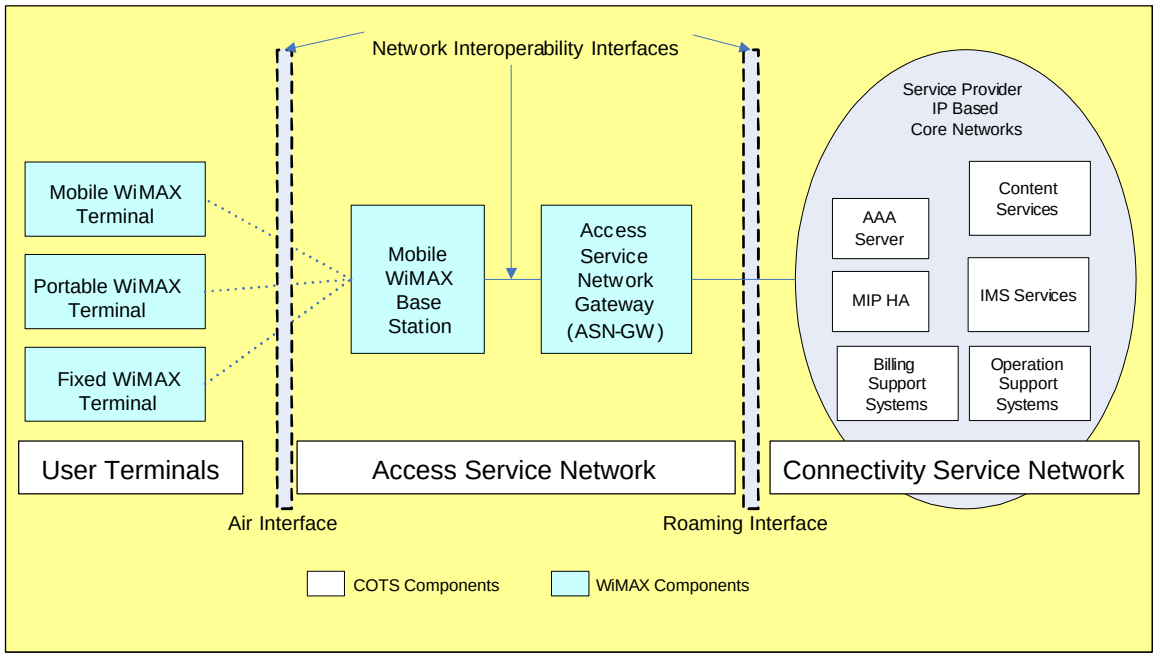

Figure 18: WiMAX Network IP-Based Architecture

The network specifications for WiMAX-based systems are based on several basic network architecture tenets, including those listed below.

Some general tenets have guided the development of Mobile WiMAX Network Architecture and include the following: a) Provision of logical separation between such procedures and IP addressing, routing and connectivity management procedures and protocols to enable use of the access architecture primitives in standalone and inter-working deployment scenarios, b) Support for sharing of ASN(s) of a Network Access Provider (NAP) among multiple NSPs, c) Support of a single NSP providing service over multiple ASN(s) – managed by one or more NAPs, d) Support for the discovery and selection of accessible NSPs by an MS or SS, e) Support of NAPs that employ one or more ASN topologies, f) Support of access to incumbent operator services through internetworking functions as needed, g) Specification of open and well-defined reference points between various groups of network functional entities (within an ASN, between ASNs, between an ASN and a CSN, and between CSNs), and in particular between an MS, ASN and CSN to enable multi-vendor interoperability, h) Support for evolution paths between the various usage models subject to reasonable technical assumptions and constraints, i) Enabling different vendor implementations based on different combinations of functional entities on physical network entities, as long as these

Copyright 2006 WiMAX Forum
"WiMAX Forum™" and "WiMAX Forum CERTIFIED™" are trademarks of the WiMAX Forum™.

implementations comply with the normative protocols and procedures across applicable reference points, as defined in the network specifications and j) Support for the most trivial scenario of a single operator deploying an ASN together with a limited set of CSN functions, so that the operator can offer basic Internet access service without consideration for roaming or interworking.

The WIMAX architecture also allows both IP and Ethernet services, in a standard mobile IP compliant network. The flexibility and interoperability supported by the WiMAX network provides operators with a multi-vendor low cost implementation of a WiMAX network even with a mixed deployment of distributed and centralized ASN's in the network. The WiMAX network has the following major features:

Security

The end-to-end WiMAX Network Architecture is based on a security framework that is agnostic to the operator type and ASN topology and applies consistently across Greenfield and internetworking deployment models and usage scenarios. In particular there is support for: a) Strong mutual device authentication between an MS and the WiMAX network, based on the IEEE 802.16 security framework, b) All commonly deployed authentication mechanisms and authentication in home and visited operator network scenarios based on a consistent and extensible authentication framework, c) Data integrity, replay protection, confidentiality and non-repudiation using applicable key lengths, d) Use of MS initiated/terminated security mechanisms such as Virtual Private Networks (VPNs), e) Standard secure IP address management mechanisms between the MS/SS and its home or visited NSP.

Mobility and Handovers

The end-to-end WiMAX Network Architecture has extensive capability to support mobility and handovers. It will: a) Include vertical or inter-technology handovers— e.g., to Wi-Fi, 3GPP, 3GPP2, DSL, or MSO – when such capability is enabled in multi-mode MS, b) Support IPv4 or IPv6 based mobility management. Within this framework, and as applicable, the architecture SHALL accommodate MS with multiple IP addresses and simultaneous IPv4 and IPv6 connections, c) Support roaming between NSPs, d) Utilize mechanisms to support seamless handovers at up to vehicular speeds— satisfying well-defined (within WiMAX Forum) bounds of service disruption. Some of the additional capabilities in support of mobility include the support of: i) Dynamic and static home address configurations, ii) Dynamic assignment of the Home Agent in the service provider network as a form of route optimization, as well as in the home IP network as a form of load balancing and iii) Dynamic assignment of the Home Agent based on policies.

Scalability, Extensibility, Coverage and Operator Selection

The end-to-end WiMAX Network Architecture has extensive support for scalable, extensible operation and flexibility in operator selection. In particular, it will: a) enable

Copyright 2006 WiMAX Forum
"WiMAX Forum™" and "WiMAX Forum CERTIFIED™" are trademarks of the WiMAX Forum™.

a user to manually or automatically select from available NAPs and NSPs, b) Enable ASN and CSN system designs that easily scale upward and downward – in terms of coverage, range or capacity, c) Accommodate a variety of ASN topologies - including hub-and-spoke, hierarchical, and/or multi-hop interconnects, d) Accommodate a variety of backhaul links, both wireline and wireless with different latency and throughput characteristics, e) Support incremental infrastructure deployment, f) Support phased introduction of IP services that in turn scale with increasing number of active users and concurrent IP services per user, g) Support the integration of base stations of varying coverage and capacity - for example, pico, micro, and macro base stations and e) Support flexible decomposition and integration of ASN functions in ASN network deployments in order to enable use of load balancing schemes for efficient use of radio spectrum and network resources.

Additional features pertaining to manageability and performance of WiMAX Network Architecture include: a) Support a variety of online and offline client provisioning, enrollment, and management schemes based on open, broadly deployable, IP-based, industry standards, b) Accommodation of Over-The-Air (OTA) services for MS terminal provisioning and software upgrades, and c) Accommodation of use of header compression/suppression and/or payload compression for efficient use of the WiMAX radio resources.

Multi-Vendor Interoperability

Another key aspect of the WiMAX Network Architecture is the support of interoperability between equipment from different manufacturers within an ASN and across ASNs. Such interoperability will include interoperability between: a) BS and backhaul equipment within an ASN, and b) Various ASN elements (possibly from different vendors) and CSN, with minimal or no degradation in functionality or capability of the ASN.

The IEEE 802.16 standard defines multiple convergence sub-layers. The WiMAX Network Architecture framework supports a variety of CS types including: Ethernet CS, IPv4 CS and IPv6 CS.

Quality of Service

The WiMAX Network Architecuture has provisions for support of QoS mechanisms. In particular, it enables flexible support of simultaneous use of a diverse set of IP services. The architecture supports: a) Differentiated levels of QoS - coarse-grained (per user/terminal) and/or fine-grained (per service flow per user/terminal), b) Admission control, c) Bandwidth management and d) Implementation of policies as defined by various operators for QoS-based on their SLAs (including policy enforcement per user and user group as well as factors such as location, time of day, etc.). Extensive use is made of standard IETF mechanisms for managing policy definition and policy enforcement between operators.

Copyright 2006 WiMAX Forum
"WiMAX Forum™" and "WiMAX Forum CERTIFIED™" are trademarks of the WiMAX Forum™.

The flexible WiMAX network specifications allows different implementations of Access Service Network (ASN) configurations namely ASN profiles, including both distributed/collapsed as well as centralized architectures. Furthermore, the WiMAX forum is developing an interoperability framework in which intra-ASN and inter-ASN interoperability across different vendors is ensured.

Network Architecture Specifications Timeline

The WiMAX Forum Network Working Group has divided the scope of its work on WiMAX features into 3 releases. Each release has 3 stages. Stage 1 is on requirements that are set by the Service Provider Working Group. The second and third stages correspond to architecture development and detailed protocol specifications. The work on Stage 2 of Release 1 was completed in 4Q-05 and currently Stage 3 work is in progress. It is expected to finish by 3Q-06. Meanwhile, the Network Working Group will initiate stage 2 work on the next set of features (unofficially called Release 1.5) in 2Q-06. It is anticipated Release 1.5 features will be completed by 4Q-06. As the work progresses, the WiMAX Forum Service Provider Working Group will set requirements based on operator priorities for subsequent releases and the Network Working Group will scope its specification work based on inputs from the Service Provider Working Group.

7. Other Considerations

7.1 Mobile WiMAX Open Standards and Ecosystem

The ultimate success of any technology, in many cases, is dependent on having an open standard with guaranteed equipment interoperability. This helps to drive up volume and minimize equipment variations and as a result, lowers manufacturing costs - cost savings that can ultimately be passed on to network operators and consumers. Additionally, guaranteed interoperability provides an added incentive for consumers to purchase their own user-terminals with confidence the terminals will interoperate with another operator's network.

WiMAX systems are based on the IEEE 802.16 air interface standard. This standard has evolved over a number of years with broad industry participation. The IEEE standard however, is quite broad and simply being IEEE 802.16-compliant does not guarantee that equipment from one vendor will interoperate with equipment from another vendor. The WiMAX Forum, a non-profit trade organization comprised of more than 350 member companies, takes up where the IEEE leaves off. Among the WiMAX Forum membership are service providers, equipment vendors, and device and semiconductor manufacturers. The WiMAX Forum is also collaborating with HiperMAN, a group within the ETSI BRAN Technical Committee. This collaboration has resulted in full harmonization between ETSI HiperMAN and IEEE 802.16, including the 802.16e amendment and is reflected in the interoperability standards: PHY (TS 102 177v.1.3.1) and DLC (TS 102 178v.1.3.1). The drafting activity of the testing standards, used in the WiMAX Forum

Copyright 2006 WiMAX Forum
"WiMAX Forum™" and "WiMAX Forum CERTIFIED™" are trademarks of the WiMAX Forum™.

certification process, is being done in close cooperation between ETSI BRAN HiperMAN and the WiMAX Forum's Technical Working Group and Certification Working Group. With this diversity of membership, worldwide representation, and ETSI collaboration, the WiMAX Forum is well-positioned to promote worldwide adoption and harmonization of a standards-based broadband wireless solution based on the IEEE 802.16 air interface standard with guaranteed interoperability. To achieve this goal the forum defines system performance and certification profiles consisting of a sub-set of the IEEE 802.16 standard with designated mandatory and optional features along with a suite of conformance and interoperability tests that equipment must pass to ensure multi-vendor interoperability. The WiMAX Certification label therefore, guarantees both WiMAX/802.16-compliance and equipment interoperability. The first certification testing facility was established at Cetecom Labs in Malaga, Spain in July of 2005 and WiMAX-certified products based on 802.16-2004 are beginning to appear in the marketplace. Additional certification facilities will be established in the coming months to facilitate the certification process and meet the additional requirements for 802.16e certification testing for mobile applications. The WiMAX Forum's Technical and Certification Working Groups are working to a planned schedule for availability of certification of Mobile WiMAX-based products starting in 4Q-06 followed by commercial availability in the late 2006 to mid-2007 time frame. It is expected that with widespread participation of ecosystem members and partners, and increased worldwide demand for 802.16e-based products, the cost per subscriber will decline significantly over the next 2-3 years.

7.2 Mobile WiMAX Applications

The WiMAX Forum has identified several applications [23] for 802.16e-based systems and is developing traffic and usage models for them. These applications can be broken down into five major classes. These application classes are summarized in the following table together with guidelines for latency and jitter to assure a quality user experience.

Class	Application	Bandwidth Guideline		Latency Guideline		Jitter Guideline	
1	Multiplayer Interactive Gaming	Low	50 kbps	Low	< 25 msec	N/A	
2	VoIP & Video Conference	Low	32 to 64 kbps	Low	< 160 msec	Low	<50 msec
3	Streaming Media	Low to High	5 kbps to 2 Mbps	N/A		Low	<100 msec

Copyright 2006 WiMAX Forum
"WiMAX Forum™" and "WiMAX Forum CERTIFIED™" are trademarks of the WiMAX Forum™.

Class	Application	Bandwidth Guideline		Latency Guideline	Jitter Guideline
4	Web Browsing & Instant Messaging	Moderate	10 kbps to 2 Mbps	N/A	N/A
5	Media Content Downloads	High	> 2 Mbps	N/A	N/A

Table 16: WiMAX Application Classes

7.3 Mobile WiMAX Spectrum Considerations

To take best advantage of the benefits provided by WiMAX systems, large block spectrum assignments are most desirable. This enables systems to be deployed in TDD mode with large channel bandwidths, flexible frequency re-use and with minimal spectral inefficiencies for guard-bands to facilitate coexistence with adjacent operators. Another key activity for the WiMAX Forum is collaborating with standards and regulatory bodies worldwide to promote the allocation of spectrum in the lower frequency bands (< 6 GHz) that is both application and technology neutral. Additionally, there is a major push for greater harmonization in spectrum allocations so as to minimize the number equipment variants required to cover worldwide markets.

The initial system performance profiles that will be developed by the WiMAX Forum for the recently approved 802.16e-2005 air interface standard are expected to be in the licensed 2.3 GHz, 2.5 GHz, 3.3 GHz and 3.5 GHz frequency bands. The 2.3 GHz band has been allocated in South Korea for WiBro services based on the Mobile WiMAX technology. With a 27 MHz block of spectrum assignment to each operator, this band will support a TDD deployment with 3 channels per base station and a nominal channel bandwidth of 8.75 MHz. WiBro services will be rolled out in 2006 with WiMAX-certified products.

The 2.5 to 2.7 GHz band is already available for mobile and fixed wireless services in the United States. This band is also currently underutilized and potentially available in many countries throughout South America and Europe as well as some countries in the Asia-Pacific region. The 3.3 GHz and 3.5 GHz bands are already allocated for fixed wireless services in many countries worldwide and are also well-suited to WiMAX solutions for both fixed and mobile services.

7.4 Roadmap for WiMAX Products

A certification test lab for Fixed WiMAX systems was implemented at Cetecom Labs in Malaga, Spain in July of 2005 and WiMAX-compliant products for fixed services are now available and being deployed in the licensed 3.5 GHz band and license-exempt 5.8

Copyright 2006 WiMAX Forum
"WiMAX Forum™" and "WiMAX Forum CERTIFIED™" are trademarks of the WiMAX Forum™.

GHz band. A second certification lab, TTA is being established in Korea. Both labs will be fully operational for Mobile WiMAX Release-1 profile certifications by 3rd quarter 2006 thus enabling the roll-out of Mobile WiMAX-certified products in the latter half of 2006.

The WiMAX Forum regularly considers additional Mobile WiMAX performance profiles based on market opportunities. These would address alternative frequency bands, channel bandwidths and may include Full or Half-Duplex FDD variations to comply with local regulatory requirements in selected markets. Figure 19 provides a view of the roadmap for WiMAX-compliant products.

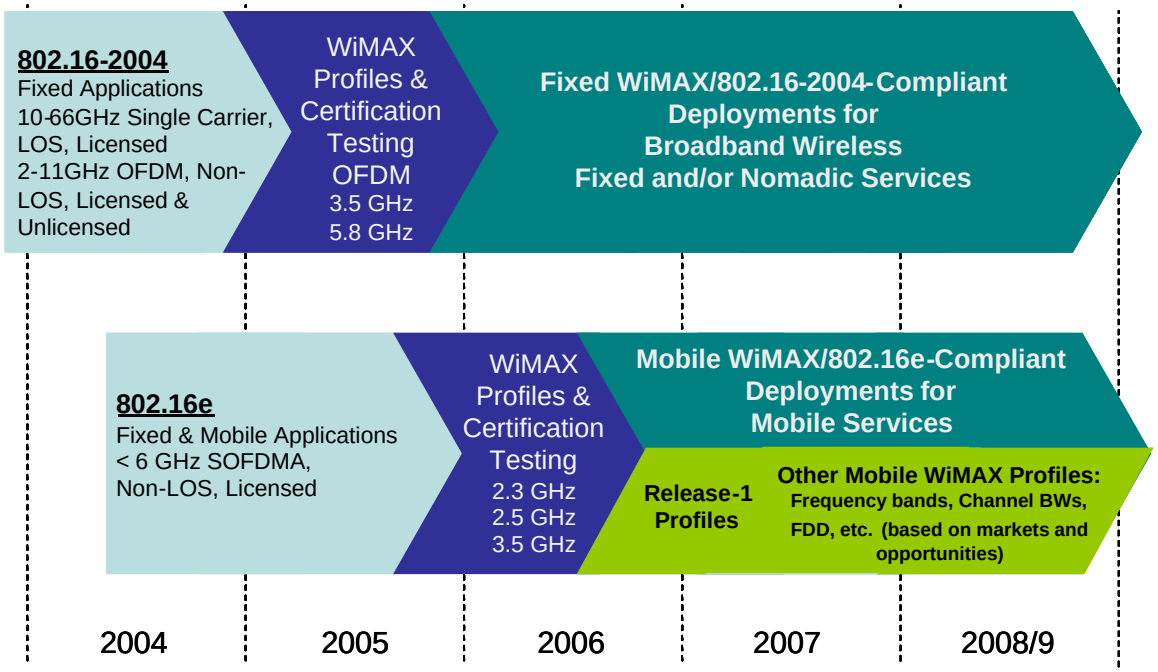

Figure 19: Roadmap for WiMAX Technology

8. Conclusion

The attributes and performance capability of Mobile WiMAX makes it a compelling solution for high performance, low cost broadband wireless services. Mobile WiMAX is on a path to address a global market through a common wide area broadband radio access technology and flexible network architecture. This technology is based on open standard interfaces developed with close to 400 companies contributing to and harmonizing on the system specifications thus laying a foundation for worldwide adoption and mass market appeal.

Copyright 2006 WiMAX Forum
"WiMAX Forum™" and "WiMAX Forum CERTIFIED™" are trademarks of the WiMAX Forum™.

To complete the picture however, it is necessary to look at the other alternatives being developed that can also address this market. In Part II [5] of this white paper Mobile WiMAX is compared to contemporary and evolving cellular technologies both on a qualitative and quantitative scale to provide a more complete assessment of the role that Mobile WiMAX can play in the evolution of broadband mobile network.

Copyright 2006 WiMAX Forum
"WiMAX Forum™" and "WiMAX Forum CERTIFIED™" are trademarks of the WiMAX Forum™.

References

[1] "Air Interface for Fixed Broadband Wireless Access Systems," IEEE STD 802.16 – 2004, October, 2004.

[2] "Air Interface for Fixed and Mobile Broadband Wireless Access Systems," IEEE P802.16e/D12, February, 2005.

[3] Hassan Yagoobi, "Scalable OFDMA Physical Layer in IEEE 802.16 WirelessMAN", Intel Technology Journal, Vol 08, August 2004.

[4] "WiMAX End-to-End Network Systems Architecture - Stage 2: Architecture Tenets, Reference Model and Reference Points," WiMAX Forum, December, 2005.

[5] "Mobile WiMAX – Part II: A Comparative Analysis", WiMAX Forum, 2006

[6] L.J. Cimini, "Analysis and Simulation of a Digital Mobile Channel Using Orthogonal Frequency Division Multiplexing," IEEE Trans. Comm., vol. COM-33, no. 7, pp 665-675, June 1985.

[7] Richard Van Nee and Ramjee Prasad, "OFDM for Wireless Multimedia Communications," Artech House, 2000.

[8] W. Xiao and R. Ratasuk, "Analysis of Hybrid ARQ with Link Adaptation", Proceedings of the Annual Allerton Conference on Communications, Control, and Computing, pp. 1618-1619, Oct 2002.

[9] G. Nair, J. Chou, T. Madejski, K. Perycz, P. Putzolu and J. Sydir "IEEE 802.16 Medium Access Control and Service Provisioning", Intel Technology Journal, vol 08, August 2004.

[10] F. Wang, A. Ghosh, R. Love, K. Stewart et.al., "IEEE 802.16e System Performance-Analysis and Simulation Results", Proc. of PIMRC, Berlin, Germany, Sept. 2005.

[11] Philippe Duplessis, "HSOPA: Exploiting OFDM and MIMO to take UMTS beyond HSDPA/HSUPA" , Nortel Technical Journal, Issue 2, July 2005.

[12] John Hoadley and Al Javed, "Overview: Technology Innovation for Wireless Broadband Access", Nortel Technical Journal, Issue 2, July 2005.

[13] John Liva and Titus Kwok-Yeung Lo, "Digital Beamforming in Wireless Communications," Artech House Publishers, 1996.

[14] S.M. Alamouti, "A Simple Transmit Diversity Technique for Wireless Communications," IEEE Journal on Selected Areas in Communications, vol. 16, pp 1451-1458, October 1998.

[15] V. Tarokh, H. Jafarkhani and A. R. Calderbank, "Space-time Block Codes from Orthogonal Designs," IEEE Transactions on Information Theory, vol. 45, pp. 1456-1467, July 1999.

[16] G. J. Foschini, "Layered Space-Time Architecture for Wireless Communication in a Fading Environment When Using Multielement Antennas", Bell Labs Tech. J. pp. 41-59, Autumn 1996.

[17] G. J. Foschini, G.D. Golden, P.W. Wolniansky and R.A. Valenzuela, "Simplified Processing for Wireless Communication at High Spectral Efficiency," IEEE. Journal on Selected Areas in Communications, vol. 17, pp. 1841-1852, 1999.

[18] A. Salvekar, S. Sandhu, Q. Li, M. Vuong and X. Qian "Multiple-Antenna Technology in WiMAX Systems," Intel Technology Journal, vol 08, August 2004.

[19] 3GPP2 C.R1002-0, CDMA2000 Evaluation Methodology, December 2004.

Copyright 2006 WiMAX Forum
"WiMAX Forum™" and "WiMAX Forum CERTIFIED™" are trademarks of the WiMAX Forum™.

[20] 3GPP TSG-RAN-1, System-Level evaluation of OFDM - further Considerations", R1-031303, November 17-21, 2003.

[21] 3GPP TSG-RAN-1, "Effective SIR Computation for OFDM System-Level Simulations," R1-03-1370, Meeting #35, Lisbon, Portugal, November 2003.

[22] Hujun Yin and Siavash Alamouti, "OFDMA – A Broadband Wireless Access Technology," IEEE Proc. of Sarnoff Symposium, March 2006.

[23] "Can WiMAX Address Your Applications?", Westech on Behalf of the WiMAX Forum, October 24, 2005

Copyright 2006 WiMAX Forum
"WiMAX Forum™" and "WiMAX Forum CERTIFIED™" are trademarks of the WiMAX Forum™.