Volume 16 Number 13 1988 Nucleic Acids Research

High efficiency transformation of *E.coli* by high voltage electroporation

William J.Dower*, Jeff F.Miller[2] and Charles W.Ragsdale[1]

Molecular Biology Group and [1]Electrophoresis Engineering Group, Bio-Rad Laboratories, 1414 Harbour Way So., Richmond, CA 94804 and [2]Department of Medical Microbiology, Stanford Medical Center, Stanford, CA 94305, USA

Received April 13, 1988; Revised and Accepted May 31, 1988

ABSTRACT

E. coli can be transformed to extremely high efficiencies by subjecting a mixture of cells and DNA to brief but intense electrical fields of exponential decay waveform (electroporation). We have obtained 10^9 to 10^{10} transformants/μg with strains LE392 and DH5α, and plasmids pUC18 and pBR329. The process is highly dependent on two characteristics of the electrical pulse: the electric field strength and the pulse length (RC time constant). The frequency of transformation is a linear function of the DNA concentration over at least six orders of magnitude; and the efficiency of transformation is a function of the cell concentration. Most of the surviving cells are competent with up to 80% transformed at high DNA concentration. The mechanism does not appear to include binding of the DNA to the cells prior to entry. Possible mechanisms are discussed and a simple procedure for the practical use of this technique is presented.

INTRODUCTION

The efficient introduction of DNA into bacteria is a phenomenon of great practical importance in molecular biology. Methods of chemical treatment yielding 10^8 to 10^9 transformants/μg of DNA with some strains of *E. coli* have been described; but the preparation of such highly competent cells is affected by many factors and the level of competence obtained can vary considerably from batch to batch (1,2). Using a different approach, we have obtained transformation efficiencies exceeding those available with the best chemical methods. We have transformed several strains of *E. coli* to efficiencies consistently in the range of 10^9 to 10^{10} transformants/μg of pBR and pUC plasmids by subjecting concentrated suspensions of cells and DNA to electrical fields of very high amplitude.

Rendering eukaryotic cells permeable to nucleic acids by exposure to electrical fields is now a commonly used technique and is referred to as electroporation (3,4,5). Recently, intact bacteria of several species, both gram negative and gram positive, have been transformed to reasonable efficiencies with this technique (6, 7,8,9,10). Although a theoretical framework exists to explain this process (11) the actual mechanism of electrical field-induced DNA uptake is not understood.

© IRL Press Limited, Oxford, England.

PARSE EX.1011.001

Our results with *E. coli* were obtained with single pulses of exponential decay waveform generated by a commercially available device. The procedure for preparing the cells and applying the pulse is simple and reproducible. We believe that electroporation provides a significant advance over chemical means for transforming many strains of *E. coli* and a variety of other bacterial species, and we propose the term "electro-transformation" for this technique.

MATERIALS AND METHODS

Cells

E. coli strains LE392 [F^-, hsd R514 (r_k^-, m_k^+), sup E44, sup F58, lac Y1, gal k2, gal T22, met B1 trp R55, λ-] and DH5α [Ø80d lac ZΔ M15, end A1, rec A1, hsd R17 (r_k^-,m_k^+), sup E44, thi-1, λ^-, gyr A, rel A1, F^-, Δ(lac ZYA$^-$ arg F), U169] were grown in L-broth (10 gm Bacto tryptone, 5 gm Bacto yeast extract, 5 gm NaCl per liter) with vigorous shaking at 37° to an ABS_{600} of 0.5 to 1 (taking cells still in mid-log growth phase). The cells were harvested by chilling the flasks briefly on ice and centrifuging at 4000 x g_{max} for 15 min at 4°. Electroporation at the high voltages used in this study requires a cell suspension of very low conductivity. To achieve this, the ionic strength of the suspension was reduced by extensive washing as follows: The cells from a 1 liter culture were resuspended in 1 liter of either cold 1 mM HEPES (pH7), or water, centrifuged as above, resuspended in 0.5 liter of cold 1 mM HEPES, or water, centrifuged, resuspended in 20 ml of 10% glycerol, centrifuged, and finally resuspended in from 2 to 20 ml of 10% glycerol (a 50 to 500-fold concentration from the culture, depending on the experiment. See table 2 for high efficiency procedure). This concentrated suspension was distributed in small aliquots, frozen on dry ice, and stored at -70°.

DNA

pUC18 and pBR329 were prepared by alkaline lysis and double banded in CsCl. These preparations were about 90% supercoiled and 10% relaxed circles. The plasmids were resuspended in TE (10 mM tris-Cl pH 8.0, 1 mM EDTA) and stored in aliquots frozen at -20°. Because estimates of transformation efficiency are dependent on accurate DNA quantitation, the DNA concentration of these stocks was measured in two ways. First, we measured the ABS_{260} and calculated the concentration assuming a molar extinction coefficient of 1.3×10^4 L mol^{-1} cm^{-1} (1 ABS_{260} unit = 50 µg/ml). Agarose gel electrophoresis showed no contaminating, ethidium bromide-stained material that might contribute to the absorbance readings. Second, we linearized the plasmid DNA by restriction digestion, and compared the band intensity on an ethidium bromide-stained agarose gel with that of several other linear DNA species of known mass. These two methods were in agreement.

PARSE EX.1011.002

For comparison, competent DH5α cells ("Hanahan cells") were obtained from BRL and transformed with various DNA samples exactly according to the instructions of the supplier.

Electronics and electrodes

The exponential decay pulses were generated by a Gene Pulser™ apparatus (Bio-Rad Laboratories, Richmond, CA) set at 3 or 25 μF and from 0.2 to 2.5 kV. The output of the pulse generator was directed through a Pulse Controller unit (Bio-Rad) containing a high power, 20 Ω resistor in series with the sample, and a selection of resistors of 100 to 1000 Ω in parallel with the sample. The effective resistance placed in parallel with the electrodes is much lower than that of the sample, and determines the time constant of the pulse (for example, 200 Ω with the 25 μF capacitor gives a 5 msec time constant). Electrode gaps of either 0.15 cm with a special "mini-electrode", or 0.2 cm with the small gap, Potter-type cuvette (Bio-Rad) were used. These electrode configurations provided field strengths of up to 16.7 kV/cm and 12.5 kV/cm. The circuit and electrodes are illustrated and described in more detail in the appendix.

Transformation protocol

The concentrated cells were thawed at room temperature, and placed on ice. 40 μl of cells were transferred to a cold, 1.5 ml polypropylene tube; 1 to 2 μl of DNA solution (in a low ionic strength medium such as TE) was added to give a final concentration of from 10 pg/ml to 7.5 μg/ml, and the suspension was mixed vigorously by flicking the tube. The cell/DNA mixture was placed between the chilled electrodes, the electrode assembly or cuvette placed in the safety chamber, and the appropriate pulse applied. Following the pulse, the cells were immediately removed from the electrodes and mixed into 25 to 50 volumes of outgrowth medium (SOC: 2% Bacto tryptone, 0.5% Bacto yeast extract, 10mM NaCl, 2.5mM KCl, 10mM $MgCl_2$, 10 mM $MgSO_4$, 20 mM glucose) in a 17 x 100 mm polypropylene tube. The samples were incubated, with shaking at 225 RPM, for 1 hour at 37°. At the end of this expression period, the cells were diluted appropriately in SOC and plated on L-agar containing either ampicillin (100 μg/ml), tetracycline (10 μg/ml), or chloramphenicol (34 μg/ml) to screen for transformants. Transformation efficiency was calculated as CFU/μg of plasmid DNA added. Dilutions were plated on non-selective L-agar to assess cell survival. Transformation frequency was calculated as transformants/survivors.

RESULTS

Our initial attempts to transform *E. coli* using field strengths of up to 6 kV/cm were modestly successful, producing 10^5 to 10^6 transformants/μg. With improved

PARSE EX.1011.003

equipment we have evaluated some of the variables of bacterial electroporation; this has resulted in some understanding of the mechanism, and improved protocols yielding very high levels of transformation.

Electrical variables

The pulses we used were of exponential decay waveform generated by the discharge of a capacitor (see Appendix). These pulses are described by the peak voltage, V_0, and the RC time constant, τ. V_0 is the amplitude of the pulse, and τ is a convenient expression of the pulse length [τ (seconds) = R (ohms) x C (farads) = the time for V_0 to decline to V_0/e]. The voltage drop experienced by each cell depends on the size of the cell and the field strength, $E_0 = V_0/d$, where d is the distance between the electrodes. As we change V, R, and C, we also change current, power, charge, and energy applied to the sample. These, in turn may lead to changes in other effects such as heating and hydrolysis.

The effect of field strength and pulse length on transformation

Our preliminary experiments showed that both the viability and transformability of the cells is very sensitive to the initial electric field strength of the pulses. Therefore, we compared the effectiveness of pulses with a wide range of field strengths and two time constants. The results are shown in Fig. 1: With pulses of 20 msec (panel A), maximum transformation occurs with a field of about 7 kV/cm; with shorter pulses of 5 msec (panel B and C), fields greater than 11 kV/cm are required to obtain maximum transformation. It is noteworthy that pulses of either 7 kV/cm and 20 msec or 11 kV/cm and 5 msec produce about the same level of transformation. Cell survival declines steadily with increasing field strength; and in each case shown, the maximum transformation efficiency is reached when 30 to 40% of the cells survive the pulse.

The data in Fig. 1 also shows an effect of pulse length on transformation; we examined the role of pulse length in more detail. We varied the time constant from 0.4 to 18 msec by changing the size of the capacitor and the resistor in parallel with the sample. (When this resistor is much smaller than the resistance of the sample, it is the primary determinant of the pulse length and provides a convenient means for varying the time constant obtained with any given capacitor.) We did this experiment at three field strengths and the results are shown in Fig.2. In the strongest field (16.7 kV/cm, panel A), pulses as short as 2.3 msec produced high levels of transformation. In the weaker fields (12.5 and 7.0 kV/cm, panels B and C) pulses considerably longer were required to produce similar levels of transformation. At each field strength, increasing the pulse length caused transformation to rise and cell survival to decline. In each case, maximum transformation is reached when about 50 to 75 %

PARSE EX.1011.004

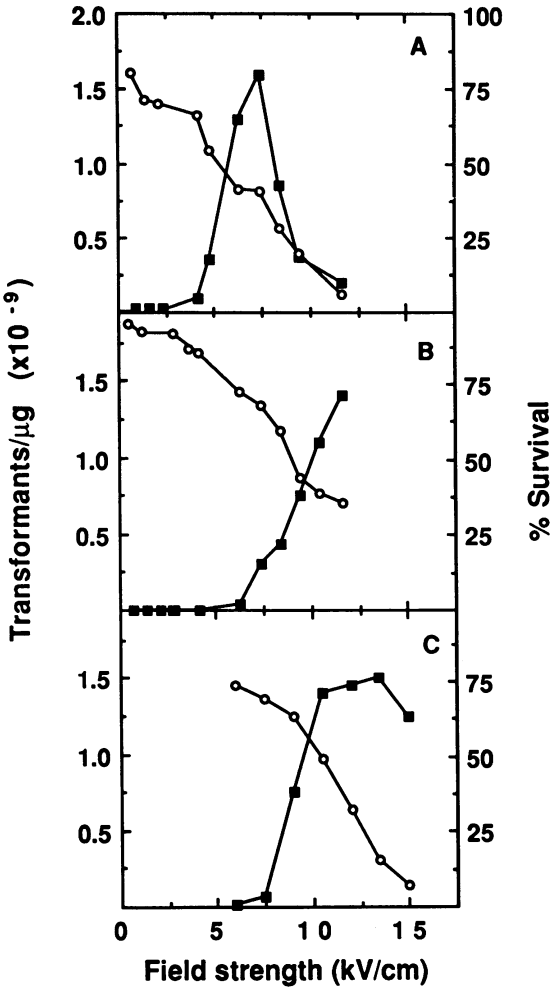

Figure 1. Effect of field strength on transformation

4 pg of pBR329 DNA was added to 40 µl of LE392 cell suspension (2.5 x 10^{10} cells/ml) and placed between cold electrodes of (**A** and **B**) 0.2 cm or (**C**) 0.15 cm gap, and pulsed at field strengths of 1 to 15 kV/cm with time constants of (**A**) 20 msec or (**B** and **C**) 5 msec. The transformation efficiency (■), and the percent of cells surviving the pulse (O) are displayed. The electrical conditions were, 200 to 2500 volts with a 25 µF capacitor, 20 Ω in series with the sample, and either (**A**) 1000 Ω, or (**B** and **C**) 200 Ω in parallel with the sample. Transformants were selected on ampicillin. The limit of detection in this experiment was 10^6 transformants/µg.

PARSE EX.1011.005

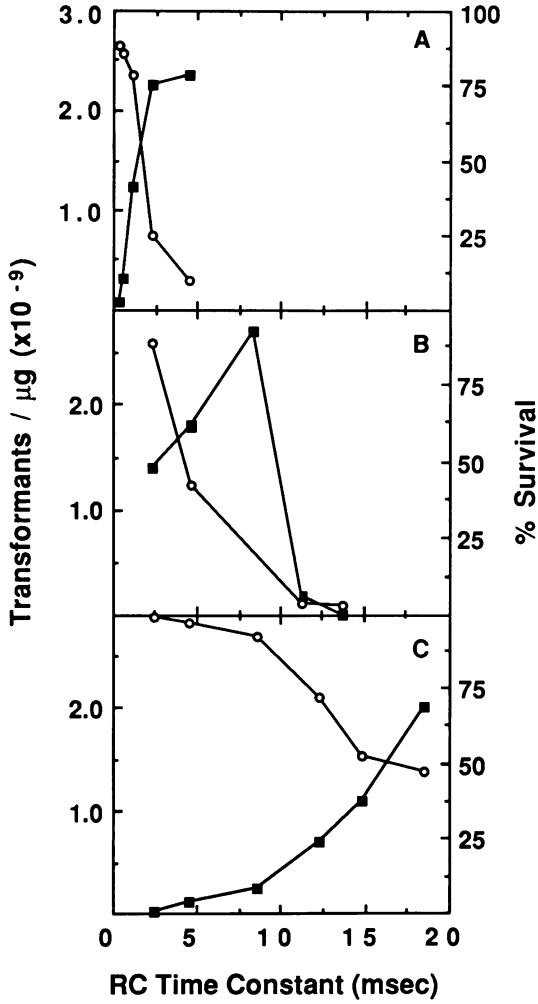

Figure 2. Effect of pulse length on transformation

4 pg pBR329 DNA was added to 40 µl of a suspension of LE392 cells (2.5 x 10^{10} cells/ml) and placed between cold electrodes of (**A**) 0.15 cm or (**B** and **C**) 0.2 cm gap and pulsed with time constants of 0.4 to 18 msec at field strengths of (**A**) 16.7 kV/cm, (**B**) 12.5 kV/cm, or (**C**) 7.0 kV/cm. The transformation efficiency (■), and the percentage of cells surviving the pulse (O) are displayed. The electrical conditions were (**A** and **B**) 2500 volts, or (**C**) 1400 volts, with (**A**) 3 µF, or (**B** and **C**) 25 µF capacitor, 20 Ω in series and 100 to 1000 Ω in parallel with the sample. Transformants were selected on ampicillin. The limit of detection in this experiment was 10^6 transformants/µg.

PARSE EX.1011.006

of the cells are killed. Further increases in pulse length caused still more cell death resulting in a decline in the recovery of transformants (Fig.2A,B).

These experiments demonstrate a compensatory relationship between the pulse amplitude and duration. Decreasing the field increased the length of the pulse required to maximally transform the cells; decreasing the pulse length increased the amplitude of the field required to maximally transform the cells, and each of these optimal combinations of field strength and pulse length produced similar efficiencies of transformation (2 to 3 x 10^9/μg) and cell death (50 to 75%).

Our ability to compensate for lower field strength by increasing the pulse length is quite limited, however. Under the conditions described above, but with fields of only 2.0 kV/cm and very long pulses (time constants up to 900 msec), we have been unable to detect transformation above 10^6/μg.

The effect of the concentration of DNA and cells on the recovery of transformants

We examined the effect of DNA concentration on electro-transformation of *E. coli.* Table 1 shows the result of pulsing the same volume of cell suspension (40 μl) with quantities of pBR329 DNA of 0.4 pg to 0.3 μg (10 pg/ml to 7.5 μg/ml). The recovery of transformants increased linearly with DNA input (and DNA concentration) over this very wide range. (The transformation efficiencies for these points were constant, within experimental variation, with a mean (± SD) of 2.9 ± 1.2 x 10^9/μg.) In contrast, varying the DNA concentration by pulsing the same mass of DNA with different volumes of cell suspension gave the same yield of transformants in a manner independent of DNA concentration. In each case. however, the transformation frequency (proportion of cells transformed) was related to the DNA concentration. To illustrate this relationship we have replotted some of the data from Table 1 and this is shown in Fig. 3. This indicates that under a given set of conditions, the DNA concentration determines the probability of any cell becoming transformed. In this case, the yield of transformants should increase with the number of cells present when the DNA concentration is held constant. To test this, we electroporated cells at concentrations of from 1.5 x 10^9/ml to 2.8 x 10^{10}/ml in the presence of a fixed DNA concentration. The data (Fig. 4) show a steady increase in transformants recovered over this range of cell concentration.

The effect of pre- and post-shock incubation of cells with DNA

If binding of DNA to the cells is required for electro-transformation, increased time of incubation of DNA with the cells prior to pulsing might increase the level of transformation; conversely, increased incubation time might be detrimental for transformation if, for example, nucleases are present in the cell suspension. We tested the effect of pre-shock incubation time and found very little difference over the range of 0.5 to 30 min (Fig. 5a), indicating that a binding step may not be necessary.

PARSE EX.1011.007

Table 1: The effect of the addition of DNA and cells on the recovery of transformants.

DNA (pg)	Vol (µl)	[DNA] (pg/ml)	Transformants	Efficiency (trans/µg x10^{-9})	Frequency (trans/survivor*)
A					
0.4	40	10	9.7×10^{2}	2.6	1.6×10^{-6}
1.0	40	25	3.8×10^{3}	4.3	6.2×10^{-6}
4.0	40	100	1.3×10^{4}	3.6	2.1×10^{-5}
10	40	250	2.4×10^{4}	2.5	3.9×10^{-5}
40	40	1.0×10^{3}	9.0×10^{4}	2.3	1.5×10^{-4}
100	40	2.5×10^{3}	2.8×10^{5}	2.8	4.6×10^{-4}
1×10^{3}	40	2.5×10^{4}	5.4×10^{6}	5.4	9.0×10^{-3}
1×10^{4}	40	2.5×10^{5}	3.6×10^{7}	3.6	6.0×10^{-2}
1×10^{5}	40	2.5×10^{6}	1.1×10^{8}	1.2	1.8×10^{-1}
3×10^{5}	40	7.5×10^{6}	4.8×10^{8}	1.6	7.8×10^{-1}
B					
4.0	40	100	2.8×10^{3}	0.7	9.3×10^{-6}
4.0	100	40	4.2×10^{3}	1.1	3.6×10^{-6}
4.0	200	20	3.4×10^{3}	0.8	1.8×10^{-6}
C					
40	40	1000	5.5×10^{4}	1.4	1.8×10^{-4}
40	100	400	5.1×10^{4}	1.3	6.7×10^{-5}
40	200	200	5.4×10^{4}	1.4	3.6×10^{-5}

See legend to Fig. 3 for experimental details.
A. 0.4 pg to 0.3 µg in 40 µl of cell suspension.
B. 4.0 pg of DNA in 40 to 200 µl of cell suspension.
C. 40 pg of DNA in 40 to 200 µl of cell suspension.
* Survival rate for all points was about 30 to 40 %

The effect of the time of incubation following the pulse (but preceeding the expression period) was also examined. The data in Fig. 5b shows that the post-shock incubation time had a profound effect on transformation efficiency, which decreased about 3-fold in the first minute of post-pulse incubation, and continued to decline by more than 20-fold in 30 min. We now transfer the sample directly from the electrodes to the SOC expression medium as quickly as possible following the pulse. Survivor data shows that a delay in transfer to the SOC medium reduces cell

PARSE EX.1011.008

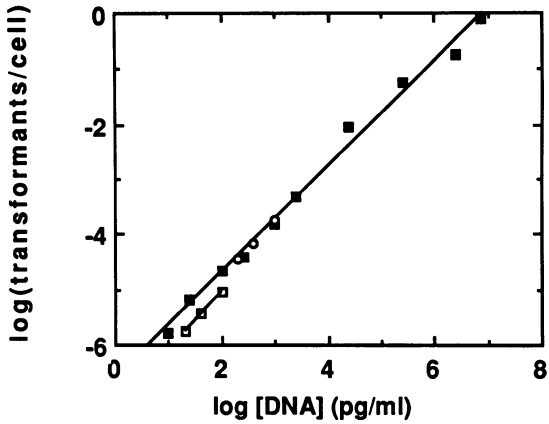

Figure 3. Effect of DNA concentration on transformation frequency

(■) From 0.4 pg to 0.3 μg of pBR329 DNA was added to 40 μl of LE392 cell suspension (3.6 x 10^{10} cells/ml); (□) 4 pg of pBR329 DNA was added to from 40 to 200 μl of an LE392 cell suspension (2.8 x 10^{10} cells/ml); and (O) 40 pg of pBR329 was added to from 40 to 200 μl of LE392 cell suspension (2.8 x 10^{10} cells/ml). One pulse of 12.5 kV/cm, 5 msec was applied to each sample and the cells were suspended in SOC and incubated as usual. Transformants were selected on ampicillin and surviving cells were estimated by plating on L-agar. Transformation frequency is calculated as transformants/survivors. The electrical conditions were 25μF, 2.5 kV, 200 Ω in parallel, 0.2 cm cuvette.

viability (data not shown). In general, our outgrowth protocol has been adapted from that used for chemically treated competent cells, and many of the same factors such as the use of SOC medium and shaking in large tubes also served to increase the efficiency of electro-transformation.

High efficiency electro-transformation protocol: comparison of strains and plasmids

By combining various improvements to the method, we have developed an optimized protocol for electro-transformation of *E. coli* (see Table 2). With this protocol we have compared strains LE392 and DH5α for the uptake of several plasmids. The results are shown in Table 3. The most efficient transformations were obtained with strain LE392, which yields up to 10^{10} transformants/μg of pUC18 with this protocol. The somewhat larger plasmid pBR329 consistently transforms LE392 to 2 to 4 x 10^9 transformants/μg, depending on the antibiotic selection regimen. Strain DH5α also transforms to extremely high efficiencies with these plasmids, though usually to about half that of LE392. This difference may be due to the reduced viability of rec A cells (DH5α). In these experiments the lower limit of detection was about 10^6 transformants/μg. At this level of sensitivity we saw no

PARSE EX.1011.009

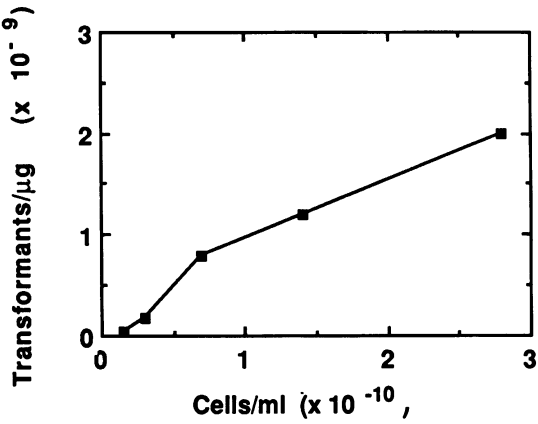

Figure 4. Effect of cell concentration on transformation efficiency
4 pg pBR329 DNA was added to 40 µl of a suspension of LE392 cells at a concentration of 1.5 x 10^9 to 2.8 x 10^{10} cells/ml in a cold 0.2 cm cuvette. The cells were pulsed at 12.5 kV/cm with a time constant of 5 msec. The electrical conditions were 2.5 kV, 25 µF capacitor, 200 Ω in parallel with the sample. Transformants were selected on ampicillin.

colonies when no DNA was added; no colonies when selecting for antibiotic resistance not carried by the plasmid; and no colonies when the cells and DNA were mixed but not subjected to an electric pulse.

Accuracy and reproducibility

The accuracy of the transformation efficiencies reported here depend on our ability to estimate plasmid DNA concentrations. The two methods we used to quantitate our concentrated plasmid stocks were quite consistent (described in materials and methods).

As a more general check on the quality of our DNA preparations and the accuracy of our estimates of transformation efficiency, we used our diluted plasmid stocks to transform commercially obtained competent DH5α cells. The supplier also provided a sample of control DNA (pUC19, 10 ng/ml stated concentration) and data on expected transformation efficiency with these cells and this DNA. This experiment would reveal any large systematic errors in our procedure, and would provide a direct comparison of chemically and electrically-mediated transformation. The data provided with the cells stated that this lot should transform at " >10^8/µg " with the control pUC19 DNA; we obtained 2.3 x 10^8/µg. Our preparations of plasmid DNA transformed these cells to 2.5 x 10^8/µg of pUC18, and 1 x 10^8/µg of pBR329 confirming the overall accuracy of our procedures.

PARSE EX.1011.010

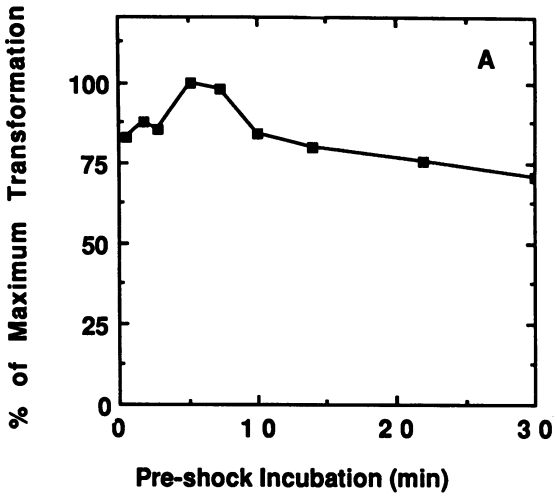

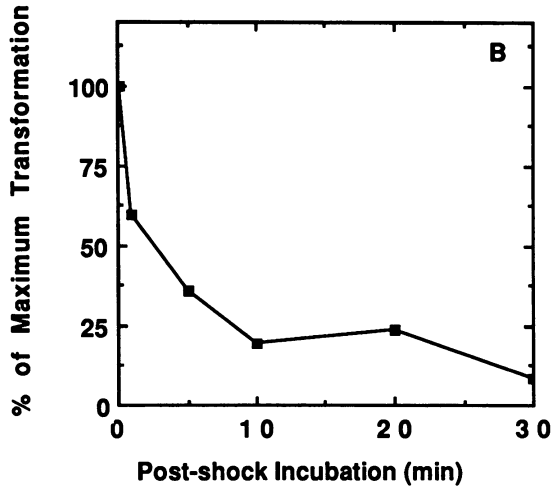

Figure 5. Effect of pre- and post-pulse incubation

A) 4 pg pBR329 DNA was added to 40 µl of a suspension of LE392 cells (2.1 x 10^{10}/ml), and incubated on ice for 0.5 to 30 min before applying one pulse of 12.5 kV/cm, 5 msec. The cells were outgrown as usual and screened on ampicillin. **B**) 4 pg pBR329 DNA was added to 40 µl of a suspension of LE392 cells (2.4 x 10^{10}/ml) and pulsed once at 12.5 kV/cm, 5 msec. Cells were transferred to tubes on ice to incubate for up to 30 min before adding SOC and beginning the outgrowth period. For the shortest time point, the cells were transferred directly to SOC, a manipulation that took about 0.1 min. After 1 hour at 37° the transformants were selected on ampicillin.

PARSE EX.1011.011

Table 2. Protocol for high efficiency electro-transformation of *E. coli*.

Cell preparation

1. Grow cells at 37° with vigorous shaking in L-broth.
2. Chill and harvest when the cells are still growing rapidly (0.5 to 1.0 ABS_{600} depending on the strain and growth conditions). See materials and methods for a detailed description of the harvest and wash procedure.
3. After washing, resuspend the cells (from a 1 liter culture) in a final volume of 2 to 3 ml of cold, 10% glycerol. The concentration of cells should be at least 2 to 4 x 10^{10}/ml. This suspension may be frozen in aliquots on dry ice and stored at -70°.

Transformation

1. Gently thaw the cells at room temperature and place them on ice.
2. To a cold, 1.5 ml polypropylene tube, add 40 µl of the cell suspension and 1 to 2 µl of DNA in a low ionic strength buffer such as TE. Mix well and let sit on ice ~1 min.
3. Set the pulse generator to the 25 µF capacitor, 2.5 kV, and 200 Ω in parallel with the sample chamber.
4. Transfer the mixture of cells and DNA to a cold, 0.2 cm electroporation cuvette, and shake the suspension to the bottom of the cuvette.
5. Apply one pulse at the above settings. This should result in a pulse of 12.5 kV/cm with a time constant of 4.5 to 5 msec.
6. Immediately add 1 ml of SOC medium (at room temperature) to the cuvette and gently but quickly resuspend the cells with a pasteur pipette.
7. Transfer the cell suspension to a 17 x 100 mm polypropylene tube and incubate at 37° for 1h (shaking the tubes at 225 RPM during this incubation may improve the recovery of transformants)
8. Plate the appropriate aliquots on selective medium.

Comparing the conventional transformation of highly competent DH5α cells and electro-transformation of cells grown from the same stock (Table 3b) shows electro-transformation to yield 10 to 20-fold more transformants per mass of DNA.

The reproducibility of electroporation of the same cell preparation is quite good, rarely varying more than 2-fold from one experiment to the next. Variation between different cell preparations has been somewhat greater, with occasional batches showing a 5 to 10-fold decrease in transformability. There are probably subtle

PARSE EX.1011.012

Table 3

A. Electroporation of *E.coli* LE392

pBR329 DNA (pg)	Ampicillin Resistant (Transformants)	Ampicillin Resistant (Transformants/ug)	Tetracycline Resistant (Transformants)	Tetracycline Resistant (Transformants/ug)
0	0	--	0	--
4	1.4×10^4	3.6×10^9	1.0×10^4	2.5×10^9
40	1.2×10^5	3.0×10^9	9.0×10^4	2.3×10^9
100	4.2×10^5	4.2×10^9	2.7×10^5	2.7×10^9
pUC18 DNA (pg)	**Ampicillin Resistant (Transformants)**	**Ampicillin Resistant (Transformants/ug)**	**Tetracycline Resistant (Transformants)**	**Tetracycline Resistant (Transformants/ug)**
0	0	--	0	--
4	4.8×10^4	1.2×10^{10}	0	$<10^6$
40	3.2×10^5	7.8×10^9	0	$<10^6$
100	8.8×10^5	8.8×10^9	0	$<10^6$

B: Electroporation of *E. coli* DH5a

pBR329 DNA (pg)	Ampicillin Resistant (Transformants)	Ampicillin Resistant (Transformants/ug)	Tetracycline Resistant (Transformants)	Tetracycline Resistant (Transformants/ug)
0	0	--	0	--
4	2.4×10^3	0.6×10^9	2.0×10^3	0.5×10^9
40	4.4×10^4	1.1×10^9	4.0×10^4	1.0×10^9
100	1.1×10^5	1.1×10^9	1.0×10^5	1.0×10^9
pUC18 DNA (pg)	**Ampicillin Resistant (Transformants)**	**Ampicillin Resistant (Transformants/ug)**	**Tetracycline Resistant (Transformants)**	**Tetracycline Resistant (Transformants /ug)**
0	0	--	0	--
4	1.3×10^4	3.2×10^9	0	$<10^6$
40	1.6×10^5	4.1×10^9	0	$<10^6$
100	2.4×10^5	2.4×10^9	0	$<10^6$

procedural differences that have large effects on the cells, and we are now further defining the important factors in the cell preparation. Using the present protocol we routinely obtain levels of transformation of 10^9 to 10^{10} transformants per µg of plasmid DNA depending on cell type and batch, plasmid, and antibiotic selection.

PARSE EX.1011.013

DISCUSSION

Transformation of *E. coli* to extremely high levels is possible with electroporation. We have examined some of the variables affecting the process to begin to understand the mechanism of bacterial electroporation and to improve the efficiency of the technique. We have described an electrical system that has allowed us to subject the cells to intense electrical fields and to easily vary some of the pulse parameters. We have shown that the amplitude of the field and the duration of its application are important effectors of electro-transformation, and that these effectors interact in a compensatory way. For example, exponential decay pulses of either 7 kV/cm and 20 msec or 12.5 kV/cm and 5 msec can produce the same level of transformation. We have not been successful in obtaining high efficiency transformation with low field strength (up to 2 kV/cm) even with very long pulses (up to 900 msec). In these experiments, we've used only pulses of exponential decay waveform, but other pulse shapes are also effective in producing very high levels of transformation (10; W.D and C.R. , unpublished data).

Our data provide some clues to the mechanism of electro-transformation, and that mechanism seems distinctly different from that of chemically-mediated transformation. First, the proportion of cells transformed continues to increase as a linear function of the DNA concentration to much higher levels than is the case for chemical transformation. Second, incubation of the cells with DNA for various times before applying the pulse has little effect on transformation frequency or efficiency. These two observations indicate that a much greater proportion of the cells are "competent" for electro-transformation (at least 80%), and that the mechanism probably does not include an intermediate step of DNA binding to the cells.

Two mechanisms consistent with these observations are (1) the opening of a new compartment-- the interior of the cell -- to passive diffusion of the DNA, and (2) the bulk flow of medium, containing the DNA, into the cell. Diffusion of molecules of this size would be quite slow, but the distances are very small and our calculations show this mechanism to be possible. Calculations based on the bulk-flow model estimate that the volume taken up by a cell would be about 10% of the volume of the cell. This seems reasonable and this model also appears possible. The bulk flow model should be greatly affected by the osmotic strength of the medium and we are now examining the effect of osmolarity on electro-transformation.

Our observation of the dependence of transformation frequency on DNA concentration has led to an understanding of the importance of high cell concentration in maximizing the transformation efficiency. With a given number of plasmid molecules, the frequency of transformation depends on the volume (i.e. DNA concentration); and the yield of transformants is a product of this frequency and the

PARSE EX.1011.014

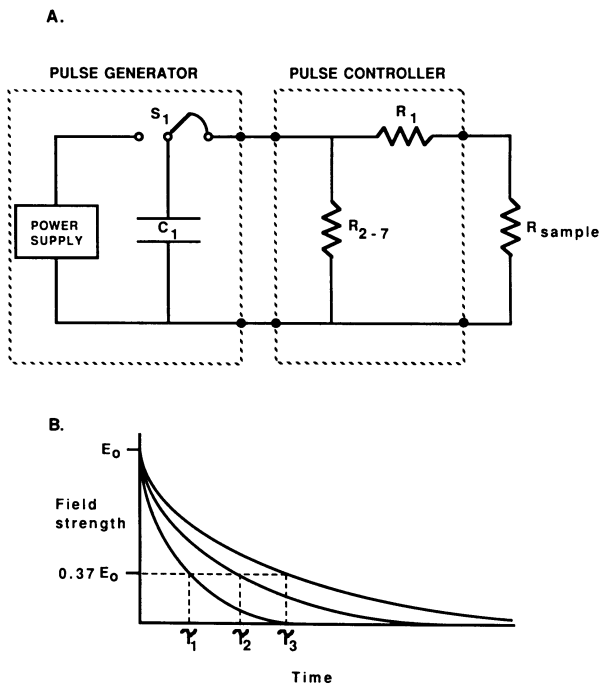

Figure 6. Electrical circuit for bacterial electroporation

(**A**) The exponential decay output from the pulse generator is directed through a pulse controlling circuit consisting of R_1 in series with the sample, and one of the resistors, R_{2-7}, placed in parallel with the sample. (**B**) An exponential decay wave form shown with three different time constants.

number of cells present. For purposes where a high efficiency , but a low frequency is required (for library construction where co-transformants are undesirable), a DNA concentration of less than 10 ng/ml and a cell concentration of greater than 3×10^{10} might be appropriate. In those cases where a high frequency is beneficial, a DNA concentration of 1 to 10 µg/ml can produce transformation of most of the surviving cells. We foresee the ability to transform such a large proportion of the cells to be useful for high frequency co-transformation of compatible plasmids, and even for the efficient recovery of transformants without the need for selection. In the examples cited above, we refer to the concentration of small, intact plasmids. In many applications, the concentration of clonable recombinant sequences is much less than than the total DNA concentration, and an emprical approach to determining the appropriate DNA concentration is required.

PARSE EX.1011.015

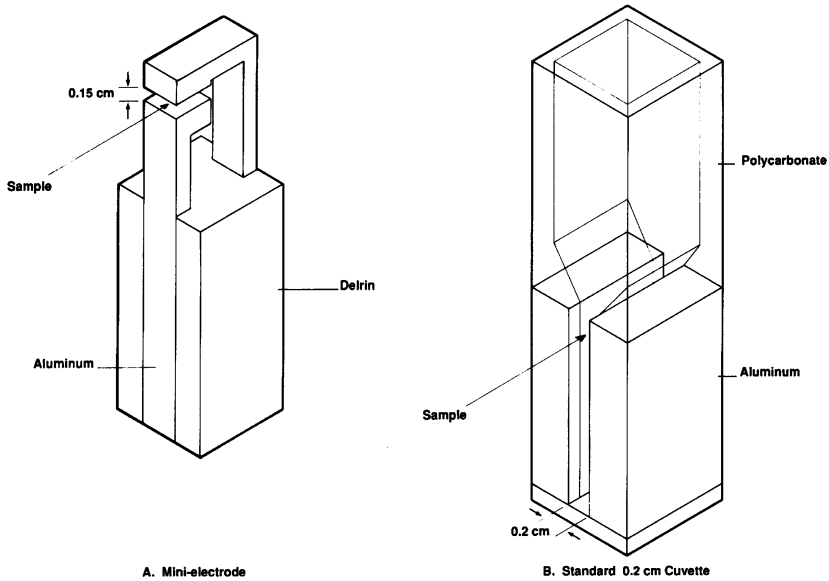

Figure 7. Electrode configurations.

(**A**) A "mini-electrode" with an adjustable gap was constructed to fit in the safety chamber of the Gene Pulser apparatus. The two electrodes overlap with an area of 0.25 cm^2 (0.5 x 0.5 cm). For these studies the gap was set at 0.15 cm. Samples of 35 to 40 µl placed in the gap were retained by capillary action. (**B**) The electrodes of the Potter-style cuvettes have a fixed gap of 0.2 cm, an electrode area of up to 2 cm^2 (1 x 2 cm), and contain up to 400µl. In these studies, samples of 40 to 200 µl were used.

With our current protocol, we have transformed several cell types to rather high efficiencies with various plasmids. With cells not specifically selected to transform well by electroporation, we routinely obtain efficiencies of 10^9 to 10^{10}/µg depending on the strain, plasmid, and selection regimen. The highest efficiencies, about 10^{10} transformants/µg, are obtained with strain LE392 and pUC18. Since 1 µg of pUC18 contains about 5 x 10^{11} molecules, as few as 2% of the plasmid molecules may be utilized in establishing transformants. Further improvements in efficiency seem possible.

We and others have shown electroporation to be useful in transforming a variety of bacterial species (6,7,8,9,10). Some of the improvements we describe here for greatly increasing the frequencies and efficiencies in *E. coli* may also be applicable to many other species.

PARSE EX.1011.016

APPENDIX

Simplified pulse generator and pulse controller circuits, and description of exponential waveform pulse characteristics.

The capacitor discharge circuit shown in Figure 6a generates an electric pulse of exponential decay waveform (Fig. 6b). The voltage of such a pulse rises quickly to a peak voltage, V_0, and declines over time as described by Eq 1.

$$V_{(t)} = V_0 [e^{-(t/\tau)}] \qquad (1)$$

Therefore, τ (the RC time constant) is the time that the voltage declines to 1/e (~37%) of the initial value.

The electric field (E) experienced by a sample placed between parallel electrodes is

$$E = V/d \qquad (2)$$

Where V is the voltage applied across electrodes separated by a distance d. Because the electrodes are fixed, E declines over time with the same kinetics as V:

$$E_{(t)} = E_0 [e^{-(t/\tau)}] \qquad (3)$$

In specifying the voltage or field strength of a pulse, we refer, in all cases, to the peak values V_0 and E_0. The pulse generator used in these studies produces a maximum potential of 2.5 kV. To obtain fields of up to 12.5 and 16.7 kV/cm, we used electrodes with gaps of 0.2 and 0.15 cm. These electrode configurations are shown in Fig.7.

The RC time constant, a convenient expression of the pulse length, is defined as

$$\tau = RC \qquad (4)$$

Where τ is in seconds, R, the resistance in ohms, and C, the capacitance in farads. In most eukaryotic electroporation arrangements, all of the charge from the capacitor is directed through the sample. In that case, the resistance of the sample determines the pulse length, τ. (For simplicity, we have assumed that the resistance of the sample remains constant during the pulse. In fact, the resistance changes somewhat with the voltage and this affects slightly the shape of the pulse.)

For bacterial electroporation, very high field strengths and small volumes are used, resulting in enormous energy densities that can cause arcing across the electrodes. To avoid this, we have employed the circuit shown in Fig. 6a. Part of the energy is

PARSE EX.1011.017

shunted around the sample and through one of several high power resistors (R_{2-7}) that can be switched into the circuit in parallel with the sample. This greatly reduces the likelihood of striking an arc. The resistance of the samples (~5000 Ω) is usually much higher than that of the parallel resistor, R_{2-7} (100 to 1000 Ω). In most cases, the total resistance of the circuit is determined primarily by the choice of parallel resistor, as follows,

$$\frac{1}{R_{total}} = \frac{1}{R_1 + R_{sample}} + \frac{1}{R_{2-7}} \qquad (5)$$

When $R_1 + R_{sample} >> R_{2-7}$, then $R_{total} \approx R_{2-7}$. Because it establishes the resistance of the circuit, R_{2-7} can be chosen to obtain a particular pulse length as described in Eq 4. However, when the value of R_{2-7} is closer to the resistance of the sample, the sample has a greater effect on the total resistance and the time constant. For example, a 1000 Ω resistor in parallel with a 4000 Ω sample will have a total resistance, as calculated by Eq. 5, of about 800 Ω, and this circuit will produce a time constant 20% shorter than the 1000 Ω resistor alone.

R_1 is a small resistor placed in series with the sample to limit the current and protect the instrument should an arc occur. R_1 is much smaller than R_{sample} and, during a normal pulse (no arc), a negligible voltage loss will occur across R_1.

ACKNOWLEDGEMENTS

We wish to thank Stanley Falkow for support and encouragement, Katherine Shigekawa for suggestions and comments, and Kim Green for help in preparing the manuscript. J.F.M. was supported by Damon Runyon-Walter Winchell Postdoctoral Fellowship DRG-911.

* To whom correspondence should be addressed.

REFERENCES

1. Hanahan, D. (1983). J. Mol. Biol. **166**: 557
2. Hanahan, D. (1985) in DNA Cloning Techniques: A Practical Approach, ed. D.M. Glover (IRL Press, Oxford) 1:109.
3. Potter, H., L. Weir, and P. Leder (1984) Proc. Natl. Acad. Sci. USA **81**: 7161-7165.
4. Fromm, M., L. P. Taylor, and V. Walbot (1985) Proc. Natl. Acad. Sci. USA **82**: 5824-5828.
5. Chu, G., H. Hayakawa, and P. Berg (1987) Nucleic Acids Res. **15**: 1311-1326.

PARSE EX.1011.018

6. Miller, J.F., W.J. Dower, and L.S. Tompkins (1988) Proc. Natl. Acad. Sci. USA **85**: 856-860.
7. Chassy, B.M. and J.L. Flickinger (1987) FEMS Microbiology Letters **44**: 173-177.
8. Harlander S.K. (1987) in Streptococcal Genetics, eds. Ferretti, J. and R. Curtiss III (American Society of Microbiology, Wash. DC) p229 -233.
9. Powell, I.B., M.G. Achen, A.J. Hillier, and B.E. Davidson (1988) Appl. Environ. Microbiology **54**:655-660.
10. Calvin, N. (1988) PhD Dissertation. Stanford University.
11. Neumann, E., M. Schaeffer-Ridder, V. Wang, and P.N Hofschneider (1982) EMBO J. **1**:841-845.

PARSE EX.1011.019