US 20100195364A1

(19) United States

(12) Patent Application Publication

Riho

(10) Pub. No.: US 2010/0195364 A1

(43) Pub. Date: Aug. 5, 2010

(54) SEMICONDUCTOR DEVICE

(75) Inventor: Yoshiro Riho, Tokyo (JP)

Correspondence Address:
MCGINN INTELLECTUAL PROPERTY LAW GROUP, PLLC
8321 OLD COURTHOUSE ROAD, SUITE 200
VIENNA, VA 22182-3817 (US)

(73) Assignee: ELPIDA MEMORY, INC., Tokyo (JP)

(21) Appl. No.: 12/656,485

(22) Filed: Feb. 1, 2010

(30) Foreign Application Priority Data

Feb. 5, 2009 (JP) 2009-024486

Publication Classification

(51) Int. Cl.
G11C 5/06 (2006.01)

(52) U.S. Cl. 365/63

(57) ABSTRACT

The invention provides a semiconductor device having, in each of stacked chip dies, not only vias the number of which corresponds to the number of signals input to and output from a single chip die but also vias the number of which corresponds to the number of signals input to and output from the stacked chip dies, and switches for controlling the input and output to and from the vias. The conduction and non-conduction of the switches are controlled by means of ROMs, whereby signals from the plurality of chip dies stacked can be output in parallel. This eliminates the need of increasing the data transfer speed of each chip die in accordance with the transfer speed of the system.

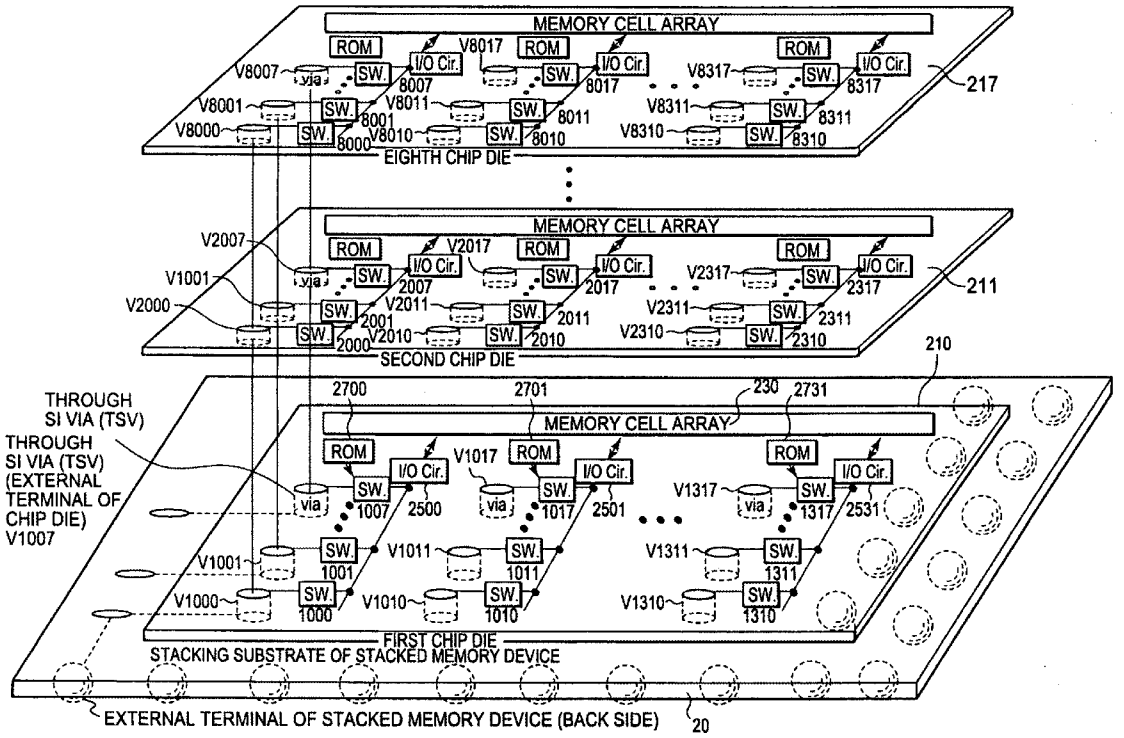

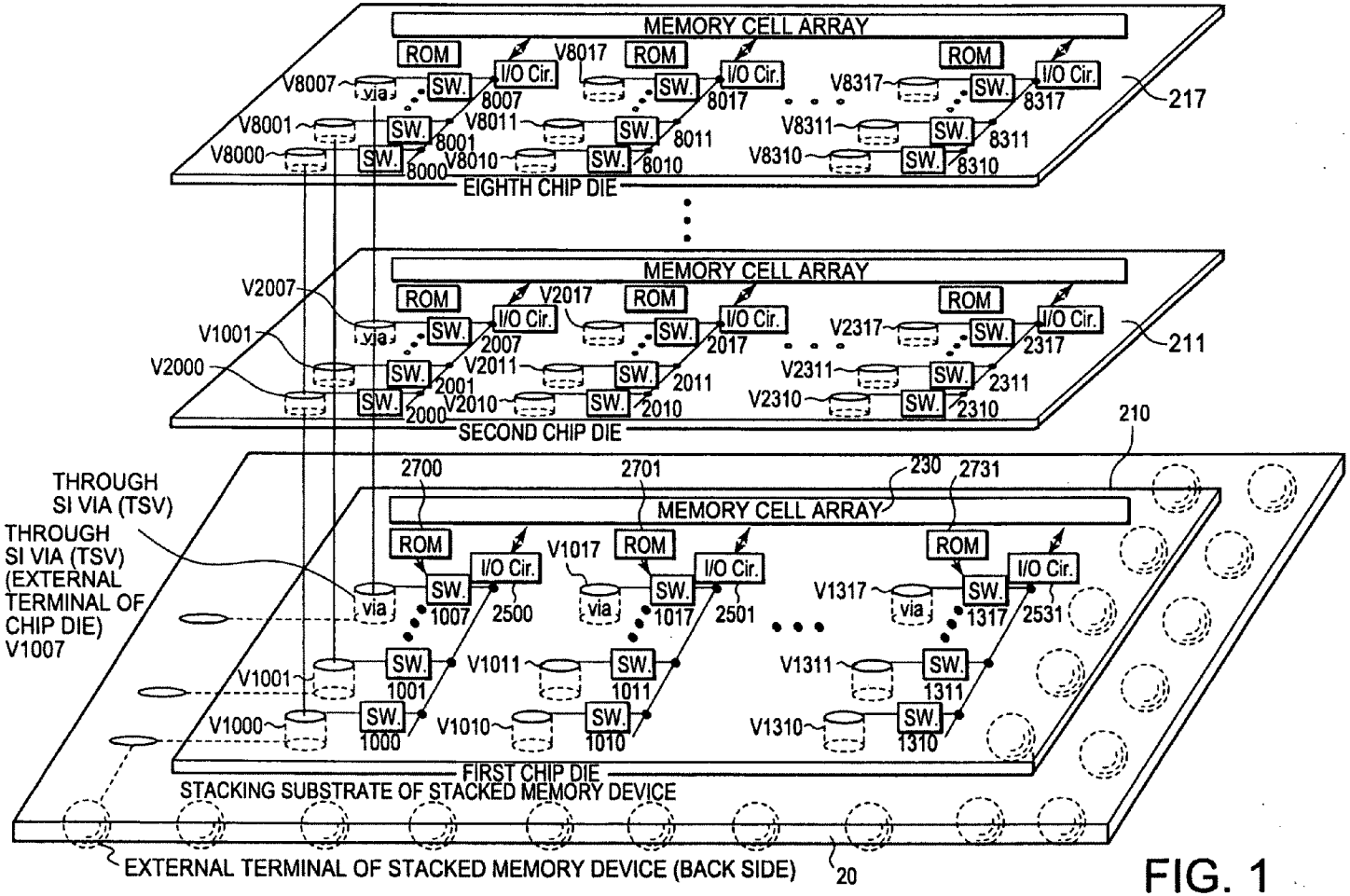
MEMORY CELL ARRAY
ROM
I/O Cir.
SW.
via
V8007
V8017
V8317
V8001
V8011
V8311
V8000
V8010
V8310
8007
8017
8317
8001
8011
8311
8000
8010
8310
217
EIGHTH CHIP DIE
V2007
V2017
V2317
V1001
V2011
V2311
V2000
V2010
V2310
2007
2017
2317
2001
2011
2311
2000
2010
2310
211
SECOND CHIP DIE
210
2700
2701
230
2731
THROUGH SI VIA (TSV)
THROUGH SI VIA (TSV) (EXTERNAL TERMINAL OF CHIP DIE) V1007
V1017
V1317
1007
2500
1017
2501
1317
2531
V1011
V1311
1001
1011
1311
V1000
V1010
V1310
1000
1010
1310
FIRST CHIP DIE
STACKING SUBSTRATE OF STACKED MEMORY DEVICE
EXTERNAL TERMINAL OF STACKED MEMORY DEVICE (BACK SIDE)
20

FIG. 1

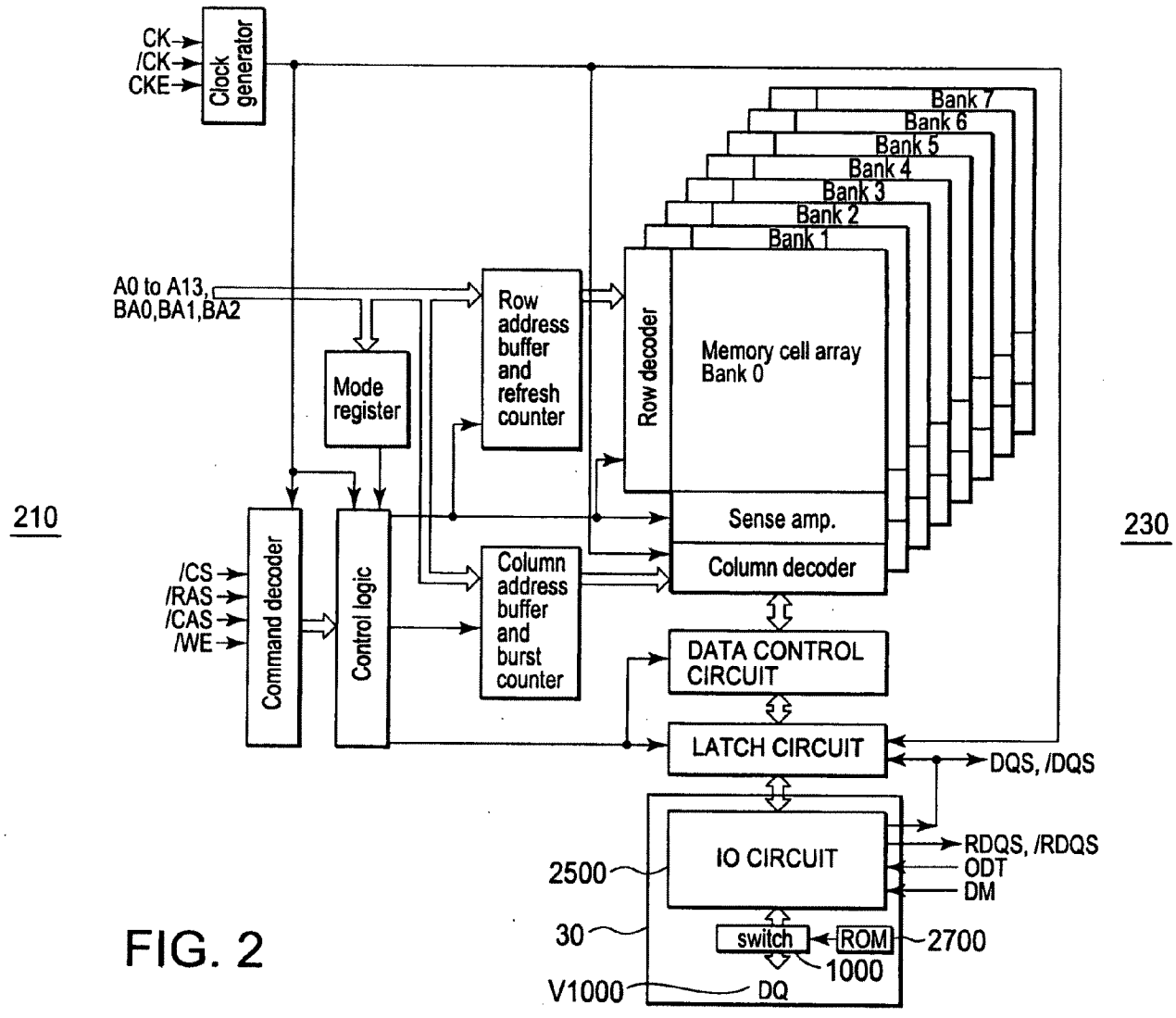
CK
/CK
CKE
Clock generator
A0 to A13,
BA0,BA1,BA2
Mode register
Row address buffer and refresh counter
Row decoder
Memory cell array Bank 0
Bank 1
Bank 2
Bank 3
Bank 4
Bank 5
Bank 6
Bank 7
210
230
/CS
/RAS
/CAS
/WE
Command decoder
Control logic
Column address buffer and burst counter
Sense amp.
Column decoder
DATA CONTROL CIRCUIT
LATCH CIRCUIT
DQS, /DQS
IO CIRCUIT
RDQS, /RDQS
ODT
DM
2500
30
switch
ROM
2700
1000
V1000
DQ

FIG. 2

FIG. 3A

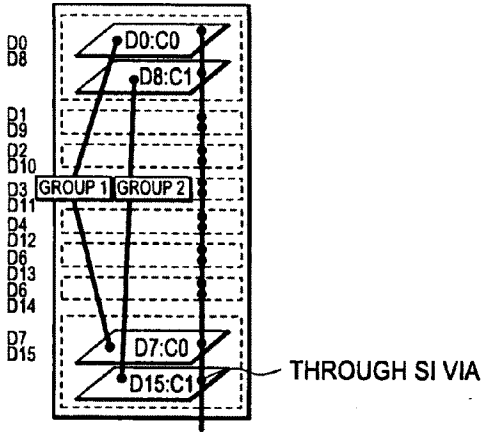
D0
D8
D1
D9
D2
D10
D3
D11
D4
D12
D6
D13
D6
D14
D7
D15
GROUP 1
GROUP 2
D0:C0
D8:C1
D7:C0
D15:C1
THROUGH SI VIA

FIG. 3B

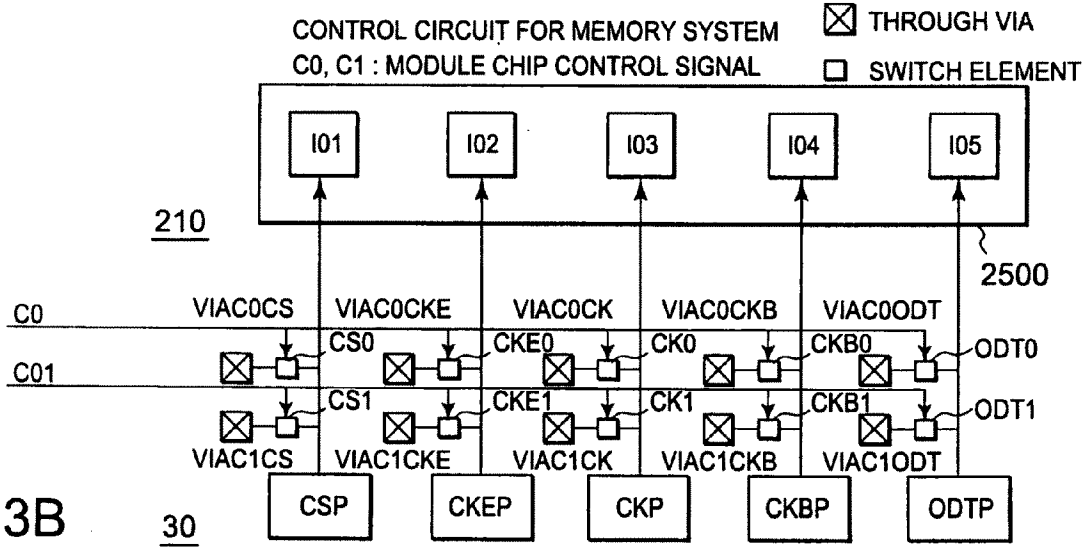
CONTROL CIRCUIT FOR MEMORY SYSTEM
C0, C1 : MODULE CHIP CONTROL SIGNAL
THROUGH VIA
SWITCH ELEMENT
I01
I02
I03
I04
I05
210
2500
C0
C01
VIAC0CS
VIAC0CKE
VIAC0CK
VIAC0CKB
VIAC0ODT
CS0
CKE0
CK0
CKB0
ODT0
CS1
CKE1
CK1
CKB1
ODT1
VIAC1CS
VIAC1CKE
VIAC1CK
VIAC1CKB
VIAC1ODT
CSP
CKEP
CKP
CKBP
ODTP
30

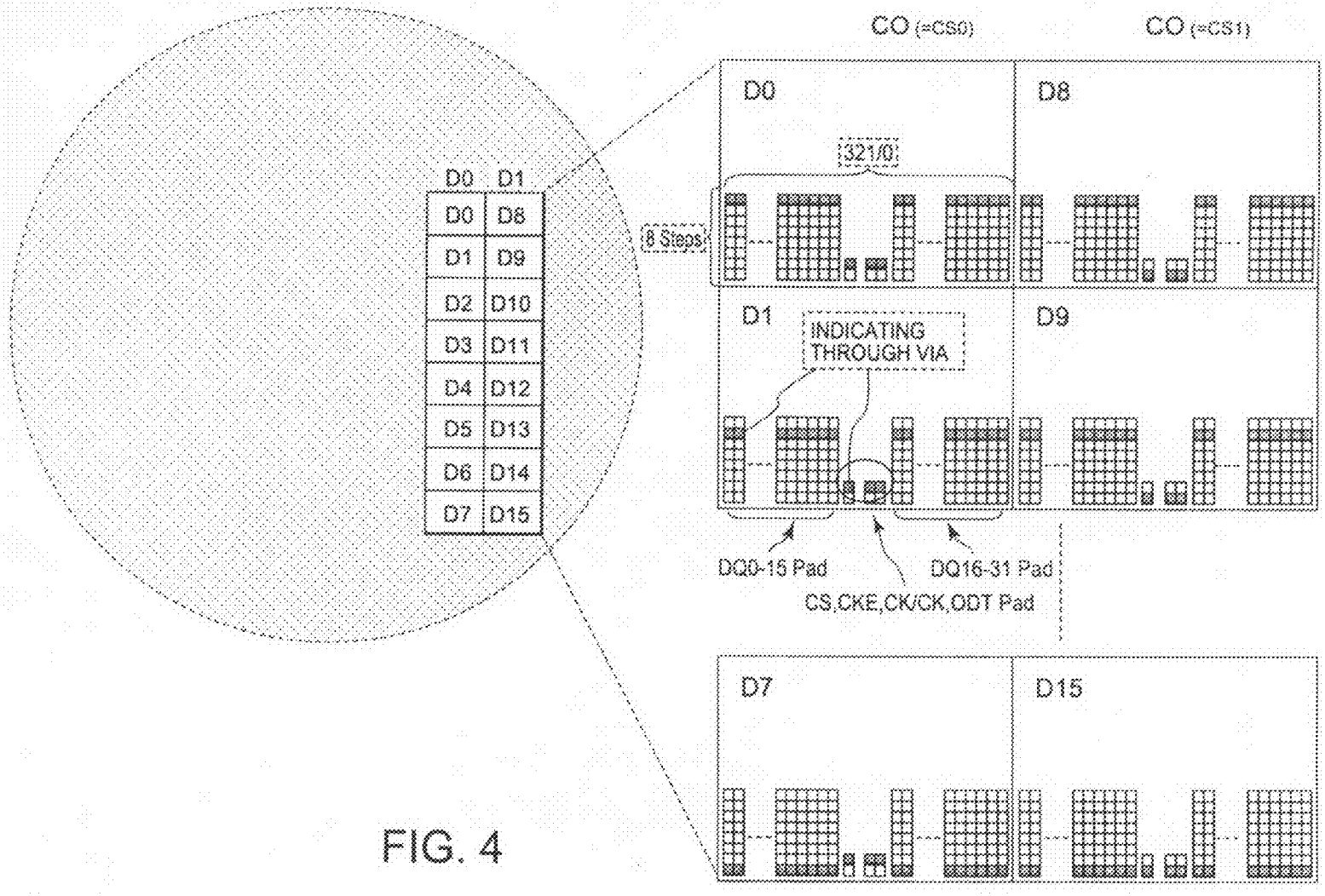
CO (=CS0)
CO (=CS1)
D0
D8
321/0
8 Steps
D1
D9
INDICATING THROUGH VIA
DQ0-15 Pad
DQ16-31 Pad
CS,CKE,CK/CK,ODT Pad
D7
D15
D0 D1
D0 D8
D1 D9
D2 D10
D3 D11
D4 D12
D5 D13
D6 D14
D7 D15

FIG. 4

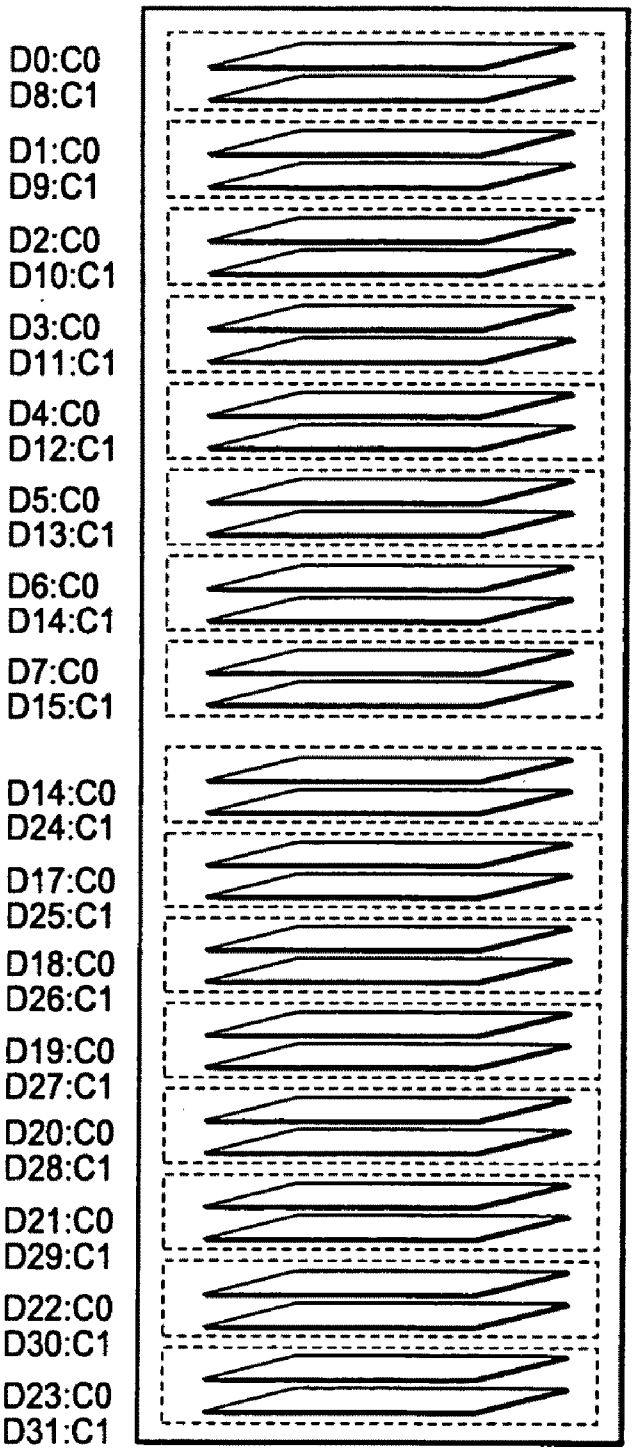
D0:C0
D8:C1
D1:C0
D9:C1
D2:C0
D10:C1
D3:C0
D11:C1
D4:C0
D12:C1
D5:C0
D13:C1
D6:C0
D14:C1
D7:C0
D15:C1
D14:C0
D24:C1
D17:C0
D25:C1
D18:C0
D26:C1
D19:C0
D27:C1
D20:C0
D28:C1
D21:C0
D29:C1
D22:C0
D30:C1
D23:C0
D31:C1

FIG. 5

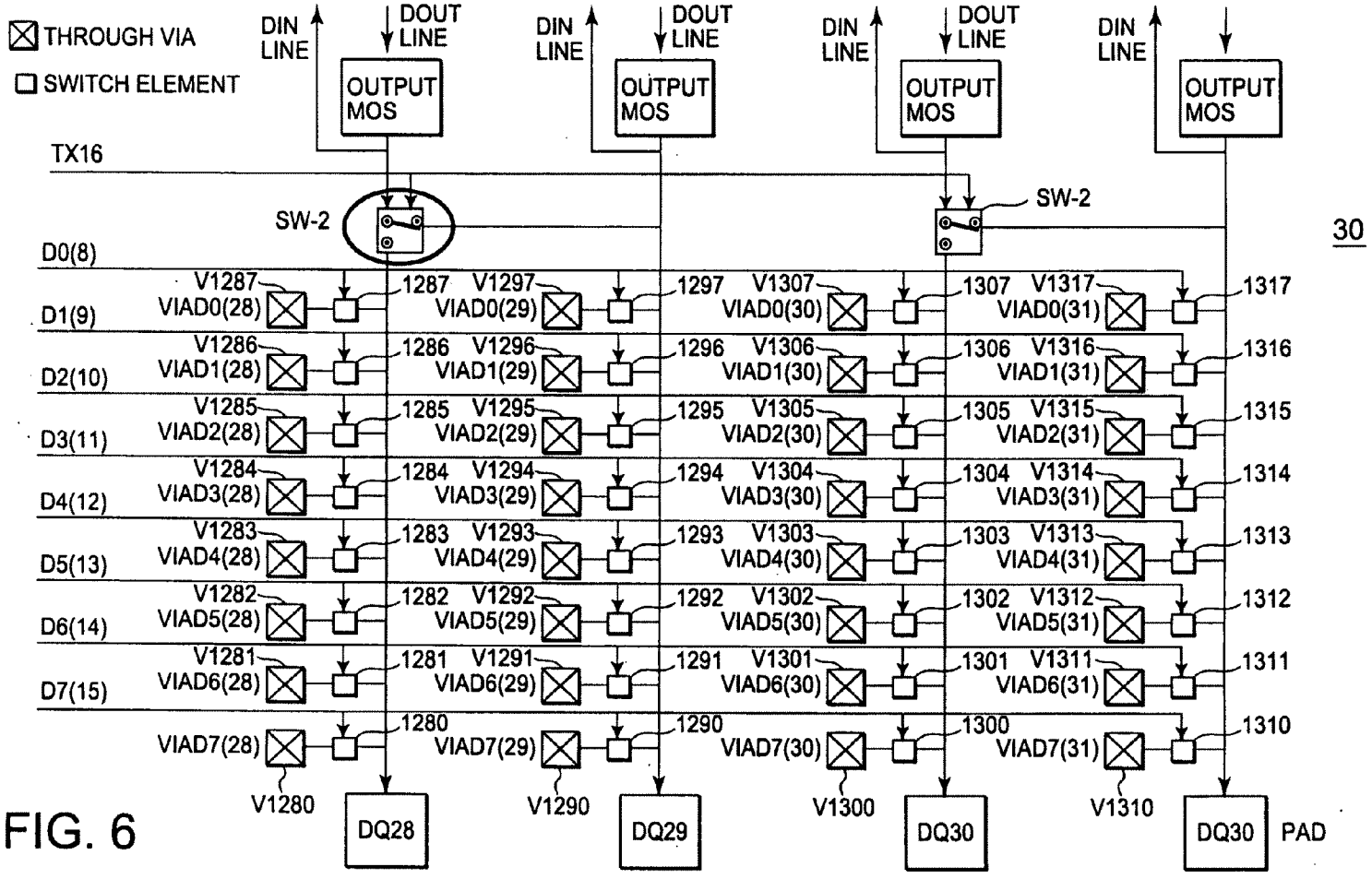
THROUGH VIA
SWITCH ELEMENT
DIN LINE
DOUT LINE
OUTPUT MOS
TX16
SW-2
30
D0(8)
D1(9)
D2(10)
D3(11)
D4(12)
D5(13)
D6(14)
D7(15)
V1287 VIAD0(28) 1287
V1297 VIAD0(29) 1297
V1307 VIAD0(30) 1307
V1317 VIAD0(31) 1317
V1286 VIAD1(28) 1286
V1296 VIAD1(29) 1296
V1306 VIAD1(30) 1306
V1316 VIAD1(31) 1316
V1285 VIAD2(28) 1285
V1295 VIAD2(29) 1295
V1305 VIAD2(30) 1305
V1315 VIAD2(31) 1315
V1284 VIAD3(28) 1284
V1294 VIAD3(29) 1294
V1304 VIAD3(30) 1304
V1314 VIAD3(31) 1314
V1283 VIAD4(28) 1283
V1293 VIAD4(29) 1293
V1303 VIAD4(30) 1303
V1313 VIAD4(31) 1313
V1282 VIAD5(28) 1282
V1292 VIAD5(29) 1292
V1302 VIAD5(30) 1302
V1312 VIAD5(31) 1312
V1281 VIAD6(28) 1281
V1291 VIAD6(29) 1291
V1301 VIAD6(30) 1301
V1311 VIAD6(31) 1311
VIAD7(28) 1280
VIAD7(29) 1290
VIAD7(30) 1300
VIAD7(31) 1310
V1280
V1290
V1300
V1310
DQ28
DQ29
DQ30
DQ30
PAD

FIG. 6

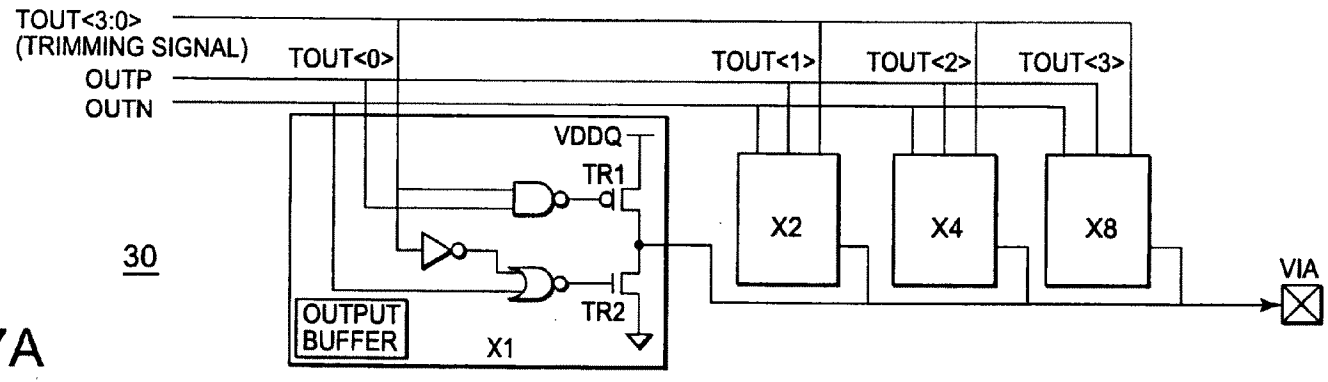
TOUT<3:0>
(TRIMMING SIGNAL)
OUTP
OUTN
TOUT<0>
TOUT<1>
TOUT<2>
TOUT<3>
VDDQ
TR1
TR2
30
OUTPUT BUFFER
X1
X2
X4
X8
VIA

FIG. 7A

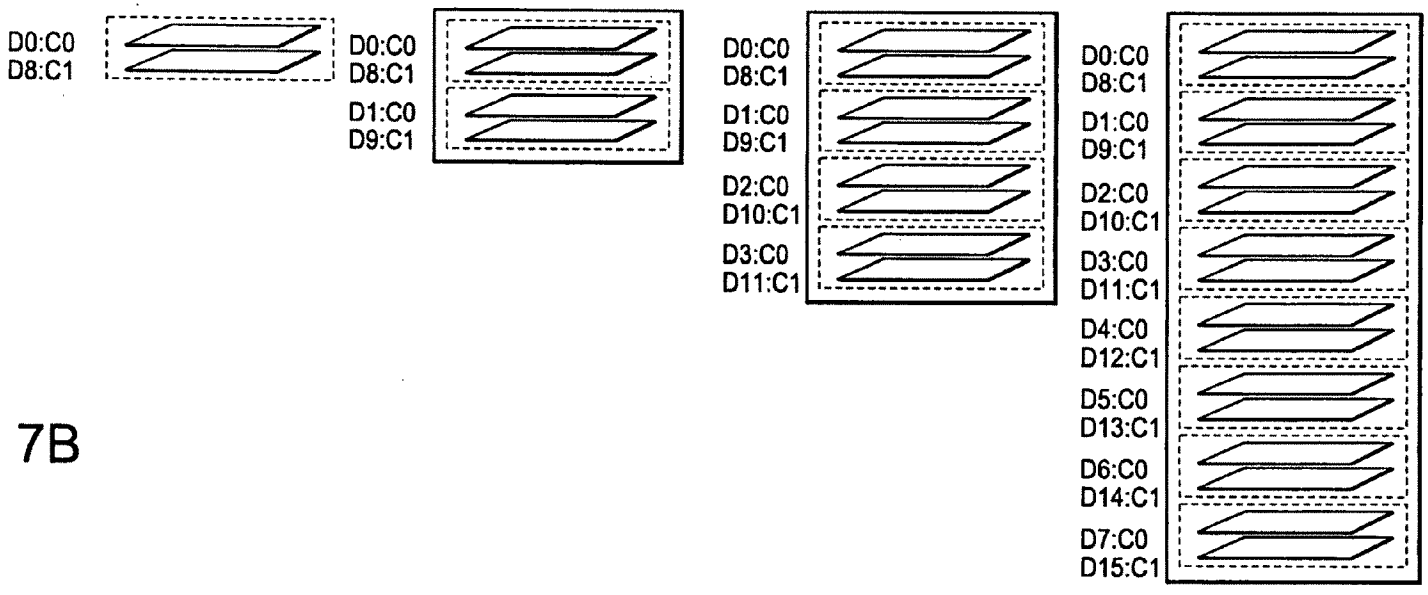
D0:C0
D8:C1
D1:C0
D9:C1
D2:C0
D10:C1
D3:C0
D11:C1
D4:C0
D12:C1
D5:C0
D13:C1
D6:C0
D14:C1
D7:C0
D15:C1

FIG. 7B

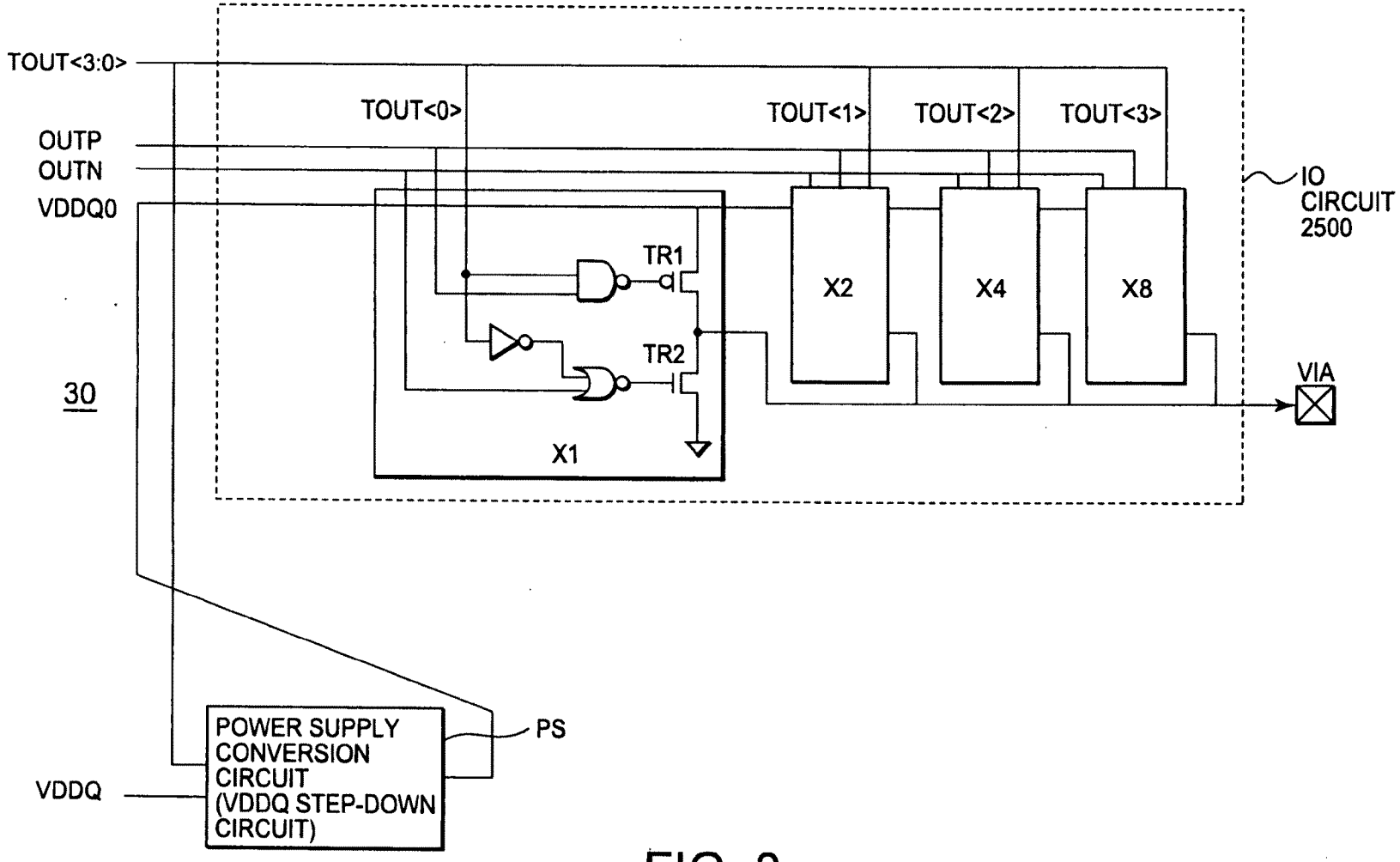
TOUT<3:0>
OUTP
OUTN
VDDQ0
30
TOUT<0>
TOUT<1>
TOUT<2>
TOUT<3>
TR1
TR2
X1
X2
X4
X8
IO CIRCUIT 2500
VIA
POWER SUPPLY CONVERSION CIRCUIT (VDDQ STEP-DOWN CIRCUIT)
PS
VDDQ

FIG. 8

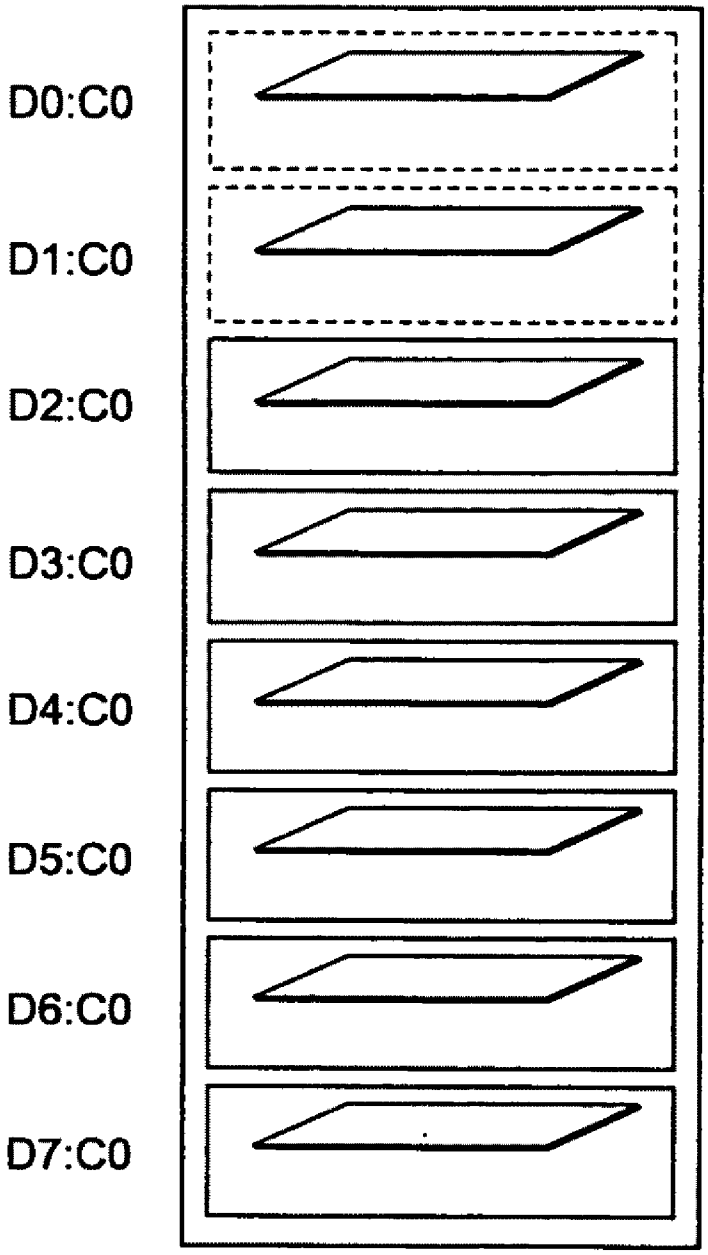

FIG. 9

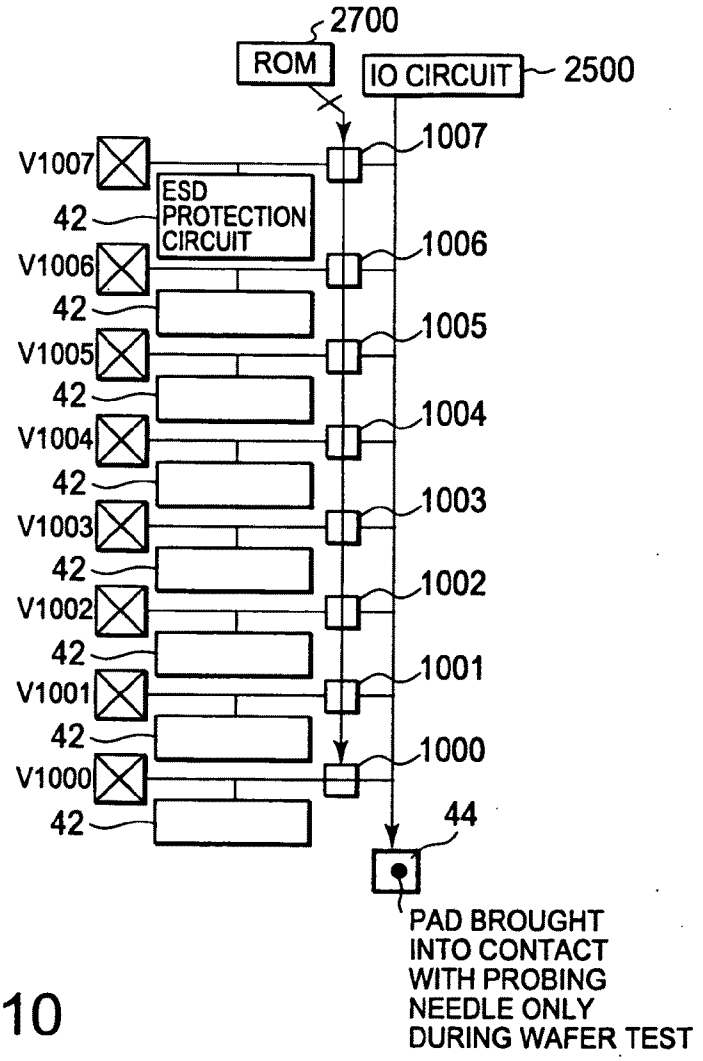
2700
ROM
IO CIRCUIT
2500
1007
V1007
ESD PROTECTION CIRCUIT
42
1006
V1006
1005
V1005
1004
V1004
1003
V1003
1002
V1002
1001
V1001
1000
V1000
44
PAD BROUGHT INTO CONTACT WITH PROBING NEEDLE ONLY DURING WAFER TEST

FIG. 10

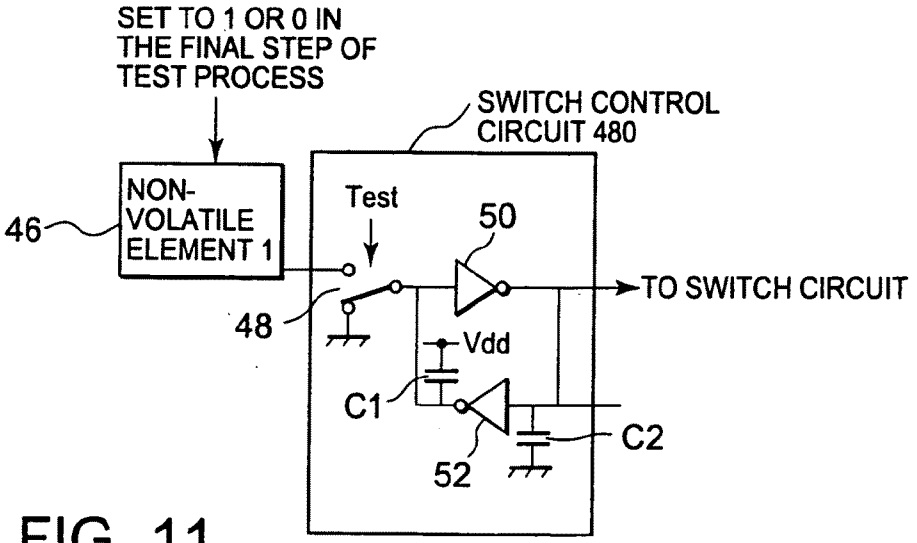
SET TO 1 OR 0 IN THE FINAL STEP OF TEST PROCESS
SWITCH CONTROL CIRCUIT 480
NON-VOLATILE ELEMENT 1
46
Test
50
TO SWITCH CIRCUIT
48
Vdd
C1
C2
52

FIG. 11

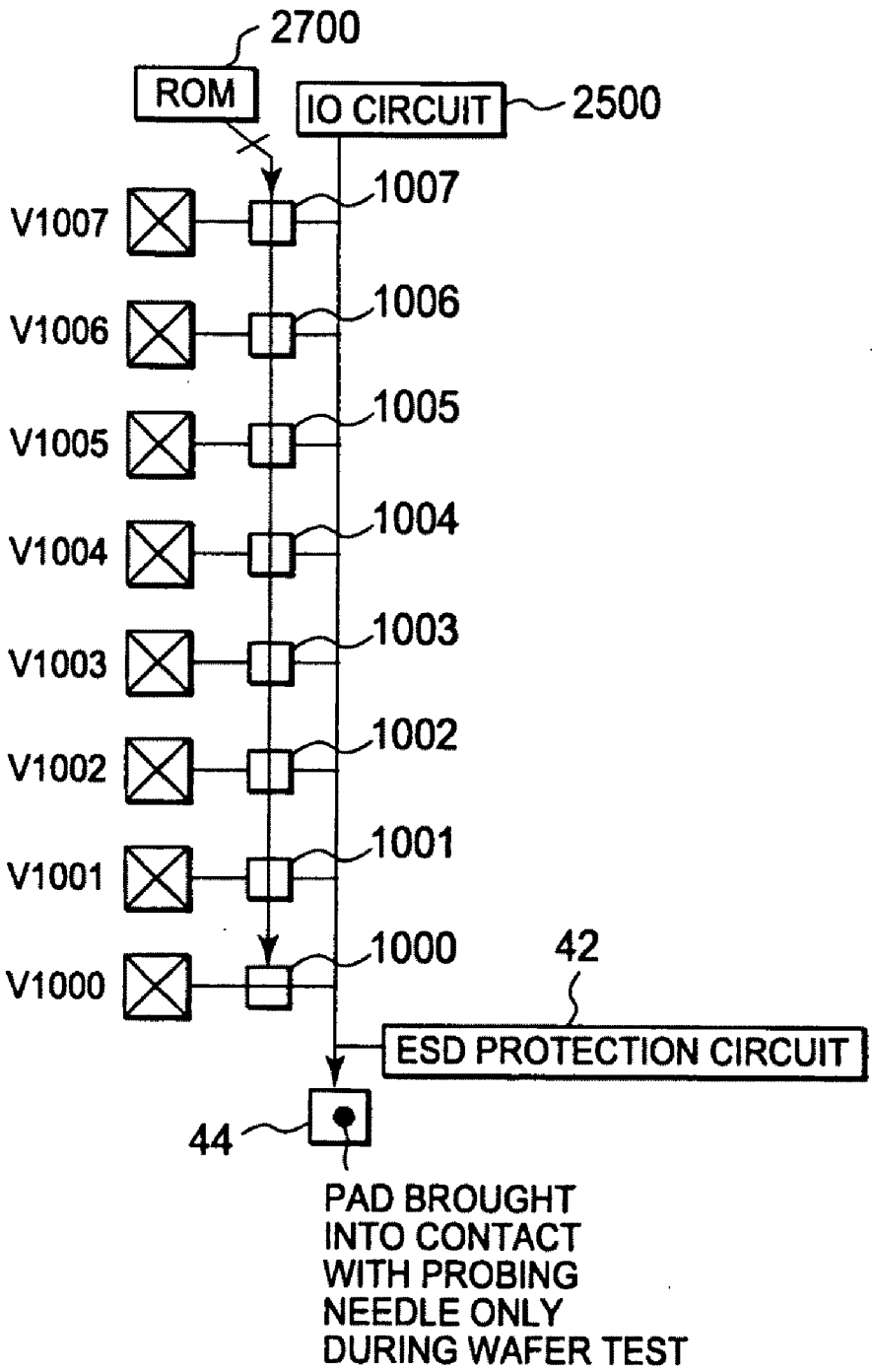
2700
ROM
IO CIRCUIT
2500
1007
V1007
1006
V1006
1005
V1005
1004
V1004
1003
V1003
1002
V1002
1001
V1001
1000
V1000
42
ESD PROTECTION CIRCUIT
44
PAD BROUGHT INTO CONTACT WITH PROBING NEEDLE ONLY DURING WAFER TEST

FIG. 12

FIG. 13A

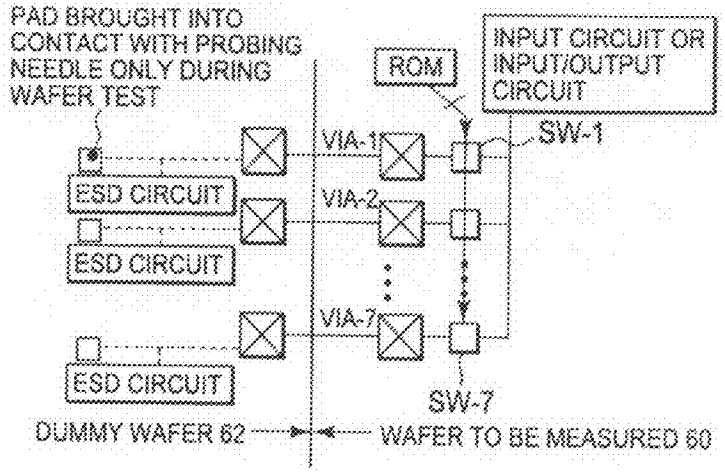

FIG. 13B

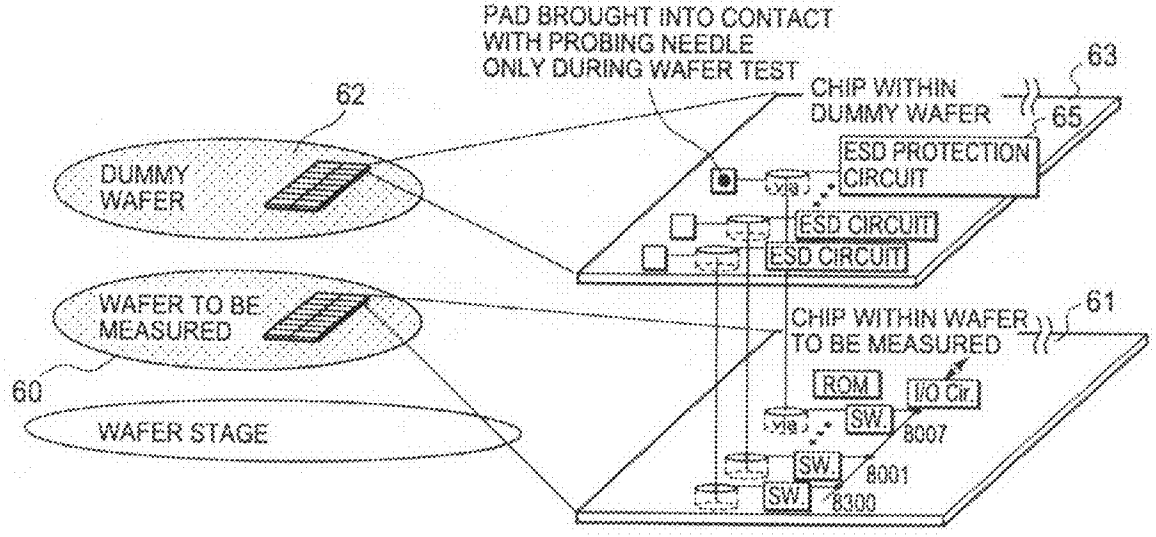

SEMICONDUCTOR DEVICE

[0001] This application is based upon and claims the benefit of priority from Japanese Patent Application No. 2009-024486, filed on Feb. 5, 2009, the disclosure of which is incorporated herein in its entirety by reference.

BACKGROUND OF THE INVENTION

[0002] 1. Field of the Invention

[0003] This invention relates to a semiconductor device having a DRAM or the like, and particularly to a semiconductor device formed by stacking a plurality of chip dies.

[0004] 2. Description of the Related Art

[0005] An example of this type of semiconductor devices is a semiconductor device in which a memory module is formed by stacking a plurality of DRAM chips on an IO chip mounted on an interposer board and connecting the DRAM chips to the IO chip by means of through electrodes formed within through silicon vias (Sivia) (see Japanese Laid-Open Patent Publication No. 2004-327474 (Patent Document 1) corresponding to U.S. Pat. No. 7,123,497 (Patent Document 2).

[0006] More specifically, according to Patent Document 1, each of the DRAM chips of the memory module has a plurality of vias and through electrodes formed within these vias in order to transfer data signals and data mask signals accompanied by the data signals.

[0007] A semiconductor device configured in this manner has advantages that the length of wiring lines connecting a plurality of DRAM chips can be shortened and a DLL, consuming a large amount of current, need be provided only on an IO chip.

SUMMARY

[0008] However, Patent Document 1 gives no consideration to the case in which the transfer speed of a data signal output from a semiconductor device having a plurality of DRAM chips stacked is increased. Specifically, Patent Document 1 does not mention problems which may occur when the data transfer speed from the stacked DRAM chips is increased, nor does solutions to such problems. In practice, it has been found that various problems such as increased power consumption and deteriorated yield would occur when the data transfer speed from the DRAM chips is increased.

[0009] Considering, for example, a case where a memory module having a total memory capacity of 2 GB (giga bytes) is formed of 16 DRAM chips, the memory module as a whole will have 64 data I/O through electrodes if each DRAM chip has four data I/O through electrodes. If it is assumed here that a data signal is input and output via each of the data I/O through electrodes at a transfer speed of 1600 Mbps, the data signal will be input and output via the data I/O through electrodes at a transfer speed of 102.4 Gbps (i.e., 12.8 GB/s) in the memory module as a whole.

[0010] However, if a data signal is input and output to and from the DRAM chips at a data transfer speed of 1600 Mbps, the current consumed by the DRAM chips will be increased significantly, resulting in increased consumption current and noise in the memory module as a whole. Further, in order to realize a data transfer speed as high as 1600 Mbps, the DRAM chips must be operated at a high frequency of 800 MHz even if the DDR (Double Data Rate) technology is employed. Thus, the fabrication of DRAM chips operating at high frequency will impose difficulties in terms of various product specification values (e.g., timing specification), deteriorating the yield of the product. Furthermore, it will make it difficult to ensure stable operation of the memory module during communication with a memory controller. These problems are attributable to the face that as the number of stacked chips is increased, the high frequency operation (at high data transfer rate) is affected more by total parasitic resistance or total parasitic capacitance of the through silicon vias and via-to-via connections proportional to the thickness of the stacked chips.

[0011] The present invention seeks to solve one or more of the above problems, or to improve upon those problems at least in part.

[0012] In one embodiment, a device comprises:

[0013] a semiconductor substrate;

[0014] a plurality of electrodes which pass through the semiconductor substrate;

[0015] switches which are connected to the electrodes, respectively;

[0016] a first signal line which is commonly connected to the switches; and

[0017] a first circuit which is connected to the first signal line,

[0018] wherein only one of the switches is selectively put into a conductive state.

BRIEF DESCRIPTION OF THE DRAWINGS

[0019] The above features and advantages of the present invention will be more apparent from the following description of certain preferred embodiments taken in conjunction with the accompanying drawings, in which

[0020] FIG. **1** is a perspective view showing a schematic configuration of a semiconductor device according to a first embodiment of this invention;

[0021] FIG. **2** is a diagram showing an electrical circuit configuration of the semiconductor device shown in FIG. **1**;

[0022] FIGS. **3**A and **3**B are diagrams for explaining a concept of a semiconductor device according to a second embodiment of the invention;

[0023] FIG. **4** is a diagram for explaining a via configuration and an arrangement of through electrodes of chip dies used in the semiconductor device shown in FIGS. **3**A and **3**B;

[0024] FIG. **5** is a diagram showing a semiconductor device according to a third embodiment of the invention which is configured using the chip dies shown in FIG. **4**;

[0025] FIG. **6** is a diagram showing a specific configuration of the chip dies used in the configuration shown in FIG. **5**;

[0026] FIGS. **7**A and **7**B are diagrams showing, respectively, a circuit used in a semiconductor device according to a fourth embodiment of the invention and an example of a memory module provided by the semiconductor device according to the fourth embodiment;

[0027] FIG. **8** is a diagram showing a power supply circuit used in the embodiment shown in FIGS. **7**A and **7**B;

[0028] FIG. **9** is a diagram showing a semiconductor device according to a fifth embodiment of the invention;

[0029] FIG. **10** is a diagram showing a semiconductor device according to a sixth embodiment of the invention and illustrating the connection positions of ESD protection circuits;

[0030] FIG. **11** is a diagram showing a test switch control circuit to be used during testing of the semiconductor device shown in FIG. **10**;

[0031] FIG. **12** is a diagram showing a modification example of the semiconductor device according to the sixth embodiment of the invention, in which the connection position of the ESD protection circuit differs from the sixth embodiment; and

[0032] FIGS. **13**A and **13**B are diagrams showing a connection during a test of a semiconductor device according to a seventh embodiment of the invention and wafers used for the test.

DESCRIPTION OF EXEMPLARY EMBODIMENTS

[0033] The invention will be now described herein with reference to illustrative embodiments. Those skilled in the art will recognize that many alternative embodiments can be accomplished using the teachings of the present invention and that the invention is not limited to the embodiments illustrated for explanatory purposes.

[0034] Referring to FIG. **1**, a semiconductor device according to a first embodiment of this invention will be described.

[0035] The shown semiconductor device has a stacking substrate **20** formed for example of an insulating material, and a plurality of chip dies (first to eighth chip dies **210** to **217** in this example) stacked on one surface of the stacking substrate **20**, whereby a memory module is formed. Although the following description of this exemplary embodiment will be made on the assumption that the chip dies **210** to **217** have a memory function, the chip dies according to this invention are not limited to those having a memory function. There are provided, on the opposite surface of the stacking substrate **20** to the surface where the chip dies are mounted, BGA (Ball Grid Array) terminals for external data signals, address signals, external control signals, and external clock signals, the BGA terminals being arranged corresponding to the mounting pitch on a packaging substrate (not shown) for mounting the semiconductor device The chip die **210** is generally called as a semiconductor chip by those skilled in the art since it is formed of a semiconductor substrate, particularly of a silicon chip.

[0036] An IO chip such as a controller for controlling the plurality of chip dies may be provided between the chip die **210** and the stacking substrate **20**, or, alternatively, the semiconductor device may have only the chip die **210** mounted on the stacking substrate **20**. When an IO chip is stacked together with the chip dies **210** to **217**, the IO chip is provided with a memory controller to form a memory system. On the other hand, when a controller is provided in the outside of the stacking substrate (outside the semiconductor device), a memory system is formed by the semiconductor device including the stacked chip dies and the controller provided outside thereof.

[0037] Each of the chip dies **210** to **217** has TSVs (Through-Silicon Vias) to be described later, and the chip dies are mutually connected by a technique using bumps or the like related to the TSV technique. The stacking substrate **20** and the chip dies are also mutually connected by means of bumps or the like.

[0038] Each of the chip dies **210** to **217**, as shown representatively by the first chip die **210**, has a memory array **230**, a plurality of IO circuits (in this example, 32 IO circuits **2500** to **2531**) connected to the memory array **230**, and a plurality of switches (in this example, eight switches **1000** to **1007**, **1010** to **1017**, . . . , **1310** to **1317**) connected to input/output lines extending from the IO circuits **2500** to **2531**.

[0039] In each of the reference numbers indicating these switches, for example in the reference number "**1310**", the most significant digit "1" indicates the number of the corresponding chip die, the first chip die in this case, the least significant digit "0" indicates the number allocated to the switch, and the two digits between the most significant and least significant digits "31" represent the last two digits in the number allocated to the corresponding IO circuit, the IO circuit **2531** in this case.

[0040] Eight switches are connected to each input/output line, and the switches **1000** to **1007**, for example, are connected to through electrodes provided within the eight vias V**1000** to V**1007**, respectively. Likewise, eight vias V**1010** to V**1017** are provided corresponding to the switches **1010** to **1017**, respectively. This applies to the other switches as well, and vias V**1310** to V**1317** are provided corresponding to the switches **1310** to **1317**, respectively. Accordingly, there are provided 256 vias in total in the first chip die **210** for the purpose of data transfer. Vias are also provided for a plurality of control signals as described later, in addition to those for the data transfer (IO signals) but also.

[0041] In the example shown in FIG. **1**, there are provided ROMs **2700** to **2731** each of which is set to select one of the eight switches connected to each input/output line. These ROMs **2700** to **2731** may be EEPROMs or may be configured as anti-fuses. The same applies to other ROMs to be described later. Although, in this embodiment, the ROMs **2700** to **2731** are provided respectively corresponding to the IO circuits **2500** to **2531** in a one-to-one relationship, a single ROM may be provided to cover all the switches **1000** to **1317** connected to the IO circuits **2500** to **2531**.

[0042] Second to eighth chip dies **211** to **217** have the same configuration as that of the first chip die **210**, and have switches **2000** to **2317**, . . . , and **8000** to **8317**, respectively. More specifically, like the first chip die **210**, the second chip die **211** is provided with 256 (32×8) data transfer vias V**2000** to V**2317** and data transfer through electrodes in correspondence with the switches **2000** to **2317**.

[0043] The eighth chip die **217** is also provided with 256 data transfer vias V**8000** to V**8317** in correspondence with the switches **8000** to **8317**.

[0044] As mentioned above, the first to eighth chip dies **210** to **217** have the same configuration and thus these chip dies can be manufactured using the same design, the same pattern layout, and the same manufacturing process.

[0045] Further, in the example shown in FIG. **1**, only one of the eight switches connected to each input/output line is rendered electrically conductive by the ROMs **2700** to **2731**. In the first chip die **210**, one of each set of the switches **1000** to **1007**, **1010** to **1017**, . . . , and **1310** to **1317** respectively connected to the circuits **2500** to **253** is selected to be rendered conductive by the ROMs **2700** to **2731**. Therefore, in this first chip die **210**, **32** switches are rendered electrically conductive at the same time. This means that 32-bit data signals are simultaneously input and output to and from the first chip die **210**.

[0046] In the second to eighth chip dies **211** to **217** as well, like the first chip die **210**, **32** switches are simultaneously rendered conductive by the ROMs, whereas the positions of the 32 switches rendered conductive are different among the chip dies **210** to **217**. For example, the switches **1000**, **1010**, . . . , and **1310** are made conductive in the first chip die **210**, and the switches **2001**, **2011**, . . . , and **2311** are made conductive in the second chip die **211**. The same rule is applied to

the other chip dies, and the switches **8007**, **8017**, . . . , and **8317** are made conductive in the eighth chip die **217**.

[0047] As a result, in the first chip die **210**, data signals of 32-bit width are transmitted and received via the switches **1000**, **1010**, . . . , and **1310** and the data transfer vias V**1000**, V**1010**, . . . , and V**1310** corresponding to these switches. Likewise in the second chip die **211**, data signals are transmitted and received via the switches **2001**, **2011**, . . . , and **2311** and the data transfer vias V**2001**, V**2011**, . . . , and V**2311** corresponding to these switches. In the eighth chip die **217**, data signals are transmitted and received via the switches **8007**, **8017**, . . . , and **8317** and the data signal transfer vias V**8007**, V**8017**, . . . , and V**8317** corresponding thereto.

[0048] The data signal transfer vias provided in the first to eighth chip dies **210** to **217** and connected to the non-conductive switches do not assume any role in the chip dies but only allow data signals from other chip dies to pass through.

[0049] Consequently, in the memory module as a whole, data signals (×256-bit data signals) are input and output through the data transfer through electrodes formed in 256 vias.

[0050] The shown memory module is thus characterized by having a number of vias (e.g., 256 vias) corresponding to the number of stacked chip dies and the number of bits of data signals input and output to and from an external circuit (e.g., a memory controller). As mentioned in the above, the data transfer through electrodes formed in the vias function as a single data line no matter how many chip dies are stacked. Although eight chip dies are stacked in this example, the number of stacked chip dies is not limited to eight. When 16 chip dies are stacked, for example, 16 switches and 16 through electrodes corresponding thereto are provided and the switches are controlled in the same manner as described above.

[0051] It is assumed here that the data transfer speed of the shown memory module is 12.8 Gbytes/sec (102.4 Gbits), and the memory module has a memory capacity of 2 Gbytes (16 Gbits).

[0052] In the memory module shown in FIG. **1** having eight chip dies, as described above, data signals are transmitted and received through the 256 data transfer through electrodes formed in the 256 vias. In this case, each data transfer through electrode only need be capable of transmitting and receiving data signals at a data transfer rate of 400 Mbps (102.4 Gbit/256). Thus, the data transfer rate of data signals transmitted and received through each data transfer through electrode of the chip dies **210** to **217** can be reduced in comparison with the transfer rate according to the conventional technique by increasing the number of vias the chip dies **210** to **217** according to the number of stacked chip dies. This enables the memory module to stably communicate with the memory controller at a low power consumption, and provides a memory module having a data transfer speed of 12.8 Gbytes/sec.

[0053] On the other hand, the memory controller has a parallel-serial conversion circuit (not shown). For example, during read data communication from the memory chip dies, the parallel-serial conversion circuit converts data transmitted by the chip dies at 400 Mbps into 1600-Mbps serial data signals and provides the same to a CPU or the like. Further, the memory controller also has a serial-parallel conversion circuit for converting 1600-Mbps serial data signals from the CPU or the like into 400-Mbps parallel data and transmitting the same to the chip dies.

[0054] According to the configuration as described above, the chip dies **210** to **217** can be operated at a lower speed compared to the conventional technique, and thus the consumption current can be reduced compared to the conventional chip dies operating at a higher speed. The configuration thus realizes stable communication and improves the manufacturing yield.

[0055] When the chip dies **210** to **217** are stacked on an IO chip having a controller (in other words, when at least a plurality of memory chips and a memory controller chip controlling the same are packaged together as a semiconductor device molded using a resin material), the IO chip is provided with the same number of vias as the vias provided in the chip dies **210** to **217**, and the data transfer through electrodes formed in these vias on the IO chip are connected to the data transfer through electrodes of the chip dies to transmit and receive data signals to and from the controller. The controller has a parallel-serial conversion circuit for parallel-serial converting data signals received from the chip dies **210** to **217** through the 256 data transfer through electrodes, and a serial-parallel conversion circuit for serial-parallel converting data signals from the outside.

[0056] In contrast, when no IO chip is provided (in other words, when a plurality of memory chips are packaged as a semiconductor device molded with a resin material while a memory controller controlling the same is provided as a separate semiconductor device by being packaged separately), the data transfer speed of data signals given through the BGA terminals of the stacking substrate **20** is converted by the controller arranged outside thereof.

[0057] Referring to FIG. **2**, an electrical circuit configuration of the chip dies (herein, description will be made taking the chip die **210** as an example). The chip die **210** shown in FIG. **2** has a memory cell array **230**, and an interface circuit **30** in which the switches **1000** to **1317**, IO circuits **2700** to **2731**, input/output lines, and through electrodes formed in the vias V**1000** to V**1317** as shown in FIG. **1** are integrated. Although the interface circuit **30** actually includes the IO circuits **2500** to **2531**, the switches **1000** to **1317**, the ROMs **2700** to **2731**, and the through electrodes (V**1000** to V**1317** (DQ)), only the IO circuit **2500**, the switch **1000**, the ROM **2700**, and the through electrode (DQ) **1000** formed in the via V**1000** are shown in the illustrated example for the sake of simplification.

[0058] The shown memory cell array **230** has banks **0** to **7**, and sense amplifiers, column decoders, and row decoders connected to the respective banks **0** to **7**. The memory cell array **230** is further provided with a row address buffer and refresh counter and a column address buffer and burst counter for receiving address signals A**0** to A**13** and bank addresses BA**0** to BA**2** supplied from the outside, and with a mode register.

[0059] Further, a command decoder and a control logic circuit are provided for receiving command signals /CS, /RAS, /CAS, and /WE supplied from the outside. The command decoder and the control logic circuit are supplied with clock signals from a clock generator.

[0060] The shown chip die **210** has the interface circuit **30**, as described above, arranged between the memory cell array **230** and the data transfer through electrodes (DQ). This interface circuit **30** is connected to the column decoders via a latch circuit and a data control circuit. The latch circuit and the data control circuit are controlled by the control logic circuit. The

clock signals from the clock generator are also supplied to the column decoder and the latch circuit.

[0061] The shown interface circuit **30** has all of the IO circuits, ROMs, switches, and data transfer through electrodes shown in FIG. **1**. The interface circuit **30** is further provided with terminals for on-die termination signals (ODT) and data mask signals (DM), a terminal for data strobe signals (DQS, /DQS), and a terminal for RDQS, /RDQS.

[0062] The components of the memory cell array **230**, such as the banks **0** to **7**, the column decoders, and the row decoders may be those used in conventional DRAMs. Accordingly, description thereof will be omitted here.

[0063] Although only the chip die **210** is illustrated in FIG. **2**, the other chip dies **211** to **217** also have the same configuration as the chip die **210**.

[0064] Referring to FIGS. **3**A and **3**B, a semiconductor device according to a second embodiment of this invention will be described. The semiconductor device shown in FIG. **3**A is a memory module including first to sixteenth chip dies D**0** to D**15**. Each of the chip dies D**0** to D**15** has 256 data transfer through electrodes (i.e., DQ pins), in the same manner as the semiconductor device according to the first embodiment shown in FIG. **1** in this respect. Accordingly, like the one in the first embodiment, this memory device is also capable of transferring data at a low speed from the chip dies D**0** to D**15** through the 256 data transfer through electrodes, and the power consumption of the memory module can be reduced.

[0065] However, the memory module according to the second embodiment shown in FIG. **3**A is different from the memory module of the first embodiment in the fact that the number of chip dies is doubled compared to the first embodiment and sixteen chip dies D**0** to D**15** are provided.

[0066] Describing more specifically, in the memory module shown in FIG. **3**A, the first to sixteenth chip dies D**0** to D**15** are divided into first and second groups, so that the first and second groups are switched over by using system control signals C**0** and C**1**. Specifically, the first group is composed of the first to seventh chip dies D**0** to D**7**, and the second group is composed of the eighth to sixteenth chip dies D**8** to D**15**.

[0067] Further, according to the second embodiment, the system control signals (i.e., group select signals) C**0** and C**1** for selecting the first and second groups are also used for selection of a chip select signal CS, a clock enable signal CKE, and clock signals CK and /CK. The chip select signal CS, clock enable signal CKE, and the clock signals CK and /CK are divided by the first and second groups, whereby the chip dies belonging to either the first or second group can be selectively operated.

[0068] When the chip dies D**0** to D**15** each have a 1-Gbit memory cell array, a memory module having 16 chip dies with a memory capacity of 2 GB in total and capable of inputting and outputting data signals having 256-bit width.

[0069] In this embodiment, each of the chip dies D**0** to D**15** is provided with 349 through electrodes in total, including 256 through electrodes (DQ**000** to DQ**031**, DQ**100** to **131**, . . . , and DQ**700** to DQ**731**) for transferring data signals (DQ), **32** DM through electrodes (DM**00** to DM**03**, DM**10** to DM**13**, . . . , and DM**70** to DM**73**), **32** through electrodes for data strobe signals (DQS**00** to DQS**03**, DQS**10** to DQS**13**, . . . , and DQS**70** to DQS**73**), **14** through electrodes for addresses (A**0** to A**13**), two through electrodes for bank addresses (BA**0** and BA**1**), three through electrodes for command signals (/RAS, /CAS, /WE), and ten through electrodes for control signals (CS**0**, CS**1**, CKE**0**, CKE**1**, CK**0**, CK**1**, /CK**0**, /CK**1**, ODT**0**, and ODT**1**). It should be noted that other through electrodes not related to this invention (such as power-supply through electrodes) are not disclosed here.

[0070] As is evident from the description above, the first group chip dies D**0** to D**7** and the second group chip dies D**8** to D**15** use in common the through electrodes for transferring data signals, the DM through electrodes, the through electrodes for data strobe signals, the through electrodes for bank addresses, the through electrodes for command signals, and the through electrodes for control signals.

[0071] Therefore, in the shown embodiment, it is necessary to identify, based on a control signal supplied to the through electrodes for control signals, which of the first and second group is using the through electrodes for transferring data signals, the DM through electrodes, the through electrodes for data strobe signals, the through electrodes for bank addresses, the through electrodes for command signals, and the through electrodes for control signals.

[0072] FIG. **3**B shows a circuit provided on each of the chip dies (e.g., the chip die **210**) for selecting the chip select signal CS, the clock enable signal CKE, the clock signal CK, /CK (CKB), and the on-die termination signal (ODT), in response to the system control signals C**0** and C**1**. The shown circuit is provided in the interface circuit **30** on each chip die (e.g., the chip die **210**), and has a chip select pad CSP, a clock enable pad CKEP, clock pads CKP and CKBP, and an ODT pad ODTP. Signals from these pads are supplied to respective corresponding input circuits IO**1** to IO**5** of the IO circuit (e.g., IO circuit **2500**).

[0073] In order to select various signals according to the chip die groups, there are provided switches and vias which are rendered electrically conductive by the system control signals C**0** and C**1**. Specifically, there are provided a chip select switch CS**0**, a clock enable switch CKE**0**, clock switches CK**0** and CKB**0**, and an ODT switch ODT**0** which are rendered conductive in response to the system control signal C**0**, and these switches are connected to through electrodes in the vias VIAC**0**CS, VIAC**0**CKE, VIAC**0**CK, VIAC**0**CKB, and VIAC**0**ODT.

[0074] On the other hand, there are provided a chip select switch CS**1**, a clock enable switch CKE**1**, clock switches CK**1** and CKB**1**, and an ODT switch ODT**1** which are rendered conductive in response to the system control signal C**1**, and these switches are connected to through electrodes in the vias VIAC**1**CS, VIAC**1**CKE, VIAC**1**CK, VIAC**1**CKB, and VIAC**1**ODT.

[0075] In the example shown in FIGS. **3**A and **3**B, when the shown chip die (**210**) belongs to the group to be controlled by the system control signal C**0**, the chip select switch CS**0**, the clock enable switch CKE**0**, the clock switches CK**0** and CKB**0**, and the ODT switch ODT**0** are made conductive are electrically conductive, whereby the signals received through the pads are supplied not only to the input circuit of the chip die (**210**), but also to the other chip dies of the same group through the through electrodes formed in the vias VIAC**0**CS, VIAC**0**CKE, VIAC**0**CK, VIAC**0**CKB, and VIAC**0**ODT.

[0076] When the chip die belongs to the group to be controlled by the system control signal C**1**, various control signals as described above are supplied to the other chip dies of the same group by way of the switches CS**1**, CKE**1**, CK**1**, CKB**1**, and ODT**1**, through the through electrode formed in the vias VIAC**1**CS, VIAC**1**CKE, VIAC**1**CK, VIAC**1**CKB, and VIAC**1**ODT.

[0077] In this manner, not only the data signals but also various control signals can be distributed to the respective groups by using the system control signals C**0** and C**1**.

[0078] FIG. **4** shows an arrangement of the chip dies and vias in the semiconductor device according to the second embodiment shown in FIGS. **3**A and **3**B. As shown in the left side of FIG. **4**, the first to sixteenth chip dies D**0** to D**15** shown in FIG. **3**A are fabricated and arranged on a wafer. In the example shown in FIG. **4**, the first to seventh chip dies D**0** to D**7** belonging to the first group and to be controlled by the system control signal C**0** are laid out in a vertical line on the wafer, and the eighth to sixteenth chip dies D**8** to D**15** belonging to the second group and to be controlled by the system control signal C**1** are arranged in a line adjacent to the line of the first to eighth chip dies D**0** to D**7**.

[0079] For the sake of simplification, description here will be on the assumption that all of the first to sixteenth chip dies D**0** to D**15** are non-defective. However, if any of the chip dies are defective, chip dies located in other regions on the wafer may be used.

[0080] In the right side of FIG. **4**, regions in the first to sixteenth chip dies D**0** to D**15** where the vias (TSV) are arranged are shown in enlargement. In each of the chip dies D**0** to D**15**, through electrodes (DQ) are provided by the data signal transfer vias in a number of rows corresponding to the number of stacked chip dies (here, eight rows in a vertical direction). More specifically, in each of the first to sixteenth chip dies D**0** to D**15**, **32** vias DQ**0-15** and DQ**16-31** corresponding to the data transfer through electrodes DQ to be used by the chip die are arranged in a row in a transverse (X) direction (represented by shades of gray), while the data transfer through electrodes DQ**0-15** and DQ**16-31** to be used by the other chip dies are provided in a number of rows corresponding to the number of the other stacked chip dies.

[0081] Further, between the data transfer through electrodes DQ**0-15** and the data transfer through electrodes DQ**16-31**, six via sets (represented by shades of gray) for system signals (CS, CKE, CK, /CK, ODT) serving as control signals controlling operation of the semiconductor chip are provided in two rows, the number of rows being corresponding to the number of the groups. These two rows of the system signal vias (TSV) are allocated to the groups, respectively. In the example shown here, the system signal via sets in the upper row represented by shades of gray are allocated to the first group controlled by the system signal C**0**, while the via set in the lower row are allocated to the second group controlled by the system signal C**1**.

[0082] As is seen from FIG. **4**, 32 data transfer vias arranged transversely in the first row (the uppermost row) represented by shades of gray are allocated to the first chip die D**0**, and 32 data transfer vias arranged transversely in the second row are allocated to the second chip die D**1**. Likewise, 32 data transfer vias in the eighth row are allocated to the eighth chip die D**7**.

[0083] To the eighth chip die D**8**, the ninth chip die D**9**, . . . and the sixteenth chip die D**15** forming the second group as well, 32 data transfer vias in the first, the second, . . . , and the eighth rows are allocated, respectively.

[0084] FIG. **5** shows a semiconductor device according to a third embodiment of this invention. The shown semiconductor device is a memory module formed by using the 32 chip dies as shown in FIG. **4**. The memory module is formed of the first to thirty-first chip dies D**0** to D**31**, and each of the chip dies D**0** to D**31** has 1-Gbit memory capacity and includes 256 data transfer through electrodes DQ**0** to DQ**31**. This memory module as a whole has 4-Gbyte (32-Gbit) memory capacity.

[0085] As shown in FIG. **5**, the first to eighth chip dies D**0** to D**7** form a first group controlled by a system control signal C**0**, while the ninth to sixteenth chip dies D**8** to D**15** from a second group controlled by a system control signal C**1**. Likewise, the 17th to 24th chip dies D**16** to D**23** shown in the lower part of FIG. **5** form the first group controlled by the system control signal C**0**, while the 25th to 32nd chip dies D**24** to D**31** from the second group controlled by the system control signal C**1**.

[0086] According to this configuration, like the second embodiment shown in FIG. **3**, the first and second groups are selectively switched over by the system control signals C**0** and C**1**. Compared to the embodiment shown in FIG. **3**, the number of chip dies is doubled (32 chip dies), whereby **16** data transfer through electrodes DQ among 256 of them are used in each of the chip dies. Accordingly, ×16-bit data signals are input and output from each chip die. In order to form the memory module shown in FIG. **5**, the chip dies inputting and outputting ×32-bit data signals must be changed over to input and output ×16-bit data signals DQ.

[0087] FIG. **6** shows a part of an interface circuit **30** for converting ×32-bit data signals into ×16-bit data signals. The shown interface circuit **30** is mounted on each of the chip dies. The first to eighth chip dies D**0** to D**7** have the same configuration as that of the ninth to sixteenth chip dies D**8** to D**15**. Thus, the figures in the parenthesis indicate an input/output line allocated to the ninth to sixteenth chip dies D**8** to D**15** and a data signal of the ninth to sixteenth chip dies D**8** to D**15**.

[0088] In the example shown in FIG. **6**, chip die select lines indicated as D**0**(**8**) to D**7**(**15**) to be selected by the ROM **2700** or the like shown in FIG. **1** (here, referred to as the first ROM), and in the same manner as in FIG. **1**, the chip die select lines are connected to switches **1280** to **1287**, **1290** to **1297**, **1300** to **1307**, and **1310** to **1317**, while the switches **1280** to **1317** (here, referred to as the first switches) are connected to vias V**1280** to V**1317**, respectively.

[0089] The shown interface circuit **30** of the chip die includes data signal pads DQ**28** to DQ**31**, data input/output lines DIN and DOUT and output MOS transistors respectively connected to the data signal pads (DQ**28** to DQ**31**).

[0090] Further, a second switch SW-**2** controlled by a control signal TX**16** is provided in alternate one of the data input/output lines (in the shown example, the data input/output lines connected to the data signal pads (DQ**28** and DQ**30**). The second switches SW-**2** are rendered electrically conductive or non-conductive by the control signal TX**16**. When non-conductive, the second switches SW-**2** prohibit the input and output to and from the data signal pads DQ**28** and DQ**30** while allowing the input and output to and from the data signal pads DQ**29** and DQ**31**. For example, data from the output MOS of DQ**28** is output to the data signal pad DQ**29**. When conductive, data from the output MOS of DQ**28** is output to the data signal pad DQ**28**. The same applies to inputting data. It should be noted that, during this operation, the intrinsic output MOS circuit of the data signal pad DQ**29** is not used according to control not shown here.

[0091] As is seen from the example shown in FIG. **6**, the second switches SW-**2** are rendered non-conductive by the control signal TX**16** when ×16-bit data signals are to be input or output. As a result, ×32-bit chip dies are changed into chip dies inputting and outputting ×16-bit data.

[0092] Thus, in the shown example, the control signal TX**16** controls such that x**32** data from the 32 output MOS circuits are output from 16 output MOS circuits. Thus, the control signal TX**16** serves as a signal for compression-controlling the data, and hence the control signal TX**16** will be herein referred to as the data compression-controlling signal.

[0093] A data compression-controlling signal for changing ×32-bit chip dies to chip dies for inputting and outputting ×16-bit data is generated by setting the state of a second ROM (different from the ROM **2700** for controlling the first switches) for controlling the second switches individually for each of the chip dies. In the chip die D**0**, for example, the second ROM is set to render the switches SW-**2** electrically non-conductive so that the data from the output MOS of DQ**28** is output to the data signal pad DQ**29**. On the other hand, in the chip die D**1**, the second ROM is set to render the switches SW-**2** conductive, so that the data from the output MOS of DQ**28** is output to the data signal pad DQ**28**. When the chip dies are stacked, the second switches SW-**2** provided in the interface circuits **30** of the chip dies are connected to the external terminals of the stacking substrate through the vias (TSV).

[0094] Referring to FIGS. **7**A and **7**B, description will be made of a semiconductor device according to a fourth embodiment of this invention. The semiconductor devices shown in FIG. **7**B are memory modules using the same chip dies as those shown in FIG. **4**. According to the fourth embodiment, several different types of products can be obtained by changing the number of the chip dies stacked.

[0095] In the example shown in FIG. **7**B, there are obtained a first memory module composed of two chip dies D**0** and D**8**, a second memory module composed of four chip dies D**0**, D**8**, D**1**, and D**9**, a third memory module composed of eight chip dies D**0**, D**8**, D**1**, D**9**, D**2**, D**10**, D**3**, and D**11**, and a fourth memory module composed of 16 chip dies D**0**, D**8**, D**1**, D**9**, D**2**, D**10**, D**3**, D**11**, D**4**, D**12**, D**5**, D**13**, D**6**, D**14**, D**7**, and D**15**. In the shown example, the chip dies are divided into first and second groups by system control signals C**0** and C**1**.

[0096] The first to fourth memory modules have 2-Gbit, 4-Gbit, 8-Gbit, and 16-Gbit memory capacities, respectively. When the memory modules have mutually different numbers of stacked chip dies as in the first to fourth memory modules, it is necessary to take into consideration that the parasitic capacitance and parasitic resistance of data transfer through electrodes formed in the vias (which depend on the thicknesses of the chip dies themselves (i.e., the thickness of the silicon substrates)) and the parasitic capacitance and parasitic resistance caused by bumps connecting between the chip dies (between the through electrodes) differ from one another, and hence the time constants defined by the total parasitic capacitance and total parasitic resistance also differ from one another. In the fourth embodiment, a configuration is provided to optimize the output drive capacity of output buffers according to the number of stacked chip dies, and preferably according to the number of stacked chip dies and the number of groups, and a third ROM is further provided to control the drive capacity. This third ROM may be provided either in the inside of the semiconductor device (e.g. in the IO chip) forming a memory module, or in the outside of the semiconductor device.

[0097] FIG. **7**A shows a circuit configuration for optimizing the output drive capacity of output buffers provided in the interface circuit **30**, according to a change in the time constant caused by parasitic capacitance and parasitic resistance. In the example shown here, there are provided four output buffers X**1**, X**2**, X**4**, and X**8** having mutually different drive capacities (the numerical values following the letter "X" indicate capacity ratios). Each of the output buffers X**1** to X**4** are formed by an inverter, and NAND, NOR, and CMOS transistors. They have the same circuit configuration, but their transistors are of mutually different sizes.

[0098] Each of the output buffers X**1** to X**8** is supplied with output signals OUTP and OUTN having different polarities as data signals to be output, and is also supplied with a trimming signal TOUT from a third ROM (not shown). According to this configuration, the first memory module for example is set such that only the output buffer circuit X**1** is caused to assume the operating by the trimming signal TOUT, whereas the second memory module is set such that the output buffer circuits X**1** and X**2**, for example, are caused to assume the operating state by the trimming signal TOUT. Likewise, the third memory module is configured such that the output buffer circuits X**1** and X**4** are r caused to assume the operating state by the trimming signal, and the fourth memory module is configured such that the output buffer circuits X**1** and X**8** are caused to assume the operating state. In this manner, in order to drive the signal lines connected to the IO circuit **2500**, a plurality of output buffers are provided in the circuit **2500**, and the number of output buffers to be activated can be controlled according to the number of stacked chip dies, that is, the number of chip dies or the number of groups. This means that the trimming signals TOUT generated by the third ROM are useful as control signals for controlling the number of output buffers to be activated in the semiconductor device according to this invention.

[0099] The configuration described above provides an advantage that memory modules having various different memory capacities can be fabricated using a single type of chip dies (by using the same design, the same pattern layout, and the same manufacturing process).

[0100] Further, when four different types of memory modules as shown in FIG. **7**B are selectively formed according to the fourth embodiment, it is desirable not only to select the output buffer circuits X**1** to X**4** but also to change the output supply voltage. Firstly, since the data transfer speed from the chip dies can be reduced to about 200 MHz compared to 800 MHz of conventional products, optimum operation can be realized at a lower voltage than the normal supply voltage VDD (1.8V). Secondly, optimum operation can be realized at a lower voltage than the normal supply voltage VDD (1.8V) according to a time constant defined by total parasitic capacitance and total parasitic resistance which are variable according to the number of stacked chip dies, preferably according to the number of stacked chip dies and the number of groups.

[0101] In fact, various different types of products formed by stacking the chip dies (stacked memory devices) have different operating frequencies and internal time constants from one another, and have different drive voltages corresponding to their optimum drive capacities. Accordingly, the aforementioned embodiment discloses a circuit configuration optimizing the output drive voltage of the output buffers by means of the third ROM.

[0102] FIG. **8** shows a supply voltage conversion circuit PS which uses the trimming signal TOUT shown in FIG. **7**A to supply a supply voltage appropriate for the memory module to an output transistor (TR**1**) within the IO circuit **2500**. The supply voltage conversion circuit PS supplies four supply voltages VDDQ**0** (1.8V, 1.5V, 1.2V, and 0.9V) appropriate for

the first to fourth memory modules (for the types of stacked memory devices) shown in FIG. **7**(B), from a power supply VDDQ given, exclusively for the output transistors, to the through electrodes (TSV) corresponding to the terminals (BGA) of the stacked memory devices or the supply terminals of the chip dies. The supply voltage conversion circuit PS is provided in the interface circuit **30**.

[0103] The level of the power supply pf a preceding logic element controlling the output transistor (TR**1**) may be shifted, if necessary, to the level of the supply voltage VDDQ**0** obtained by being converted from the power supply VDDQ.

[0104] FIG. **9** shows a semiconductor device according to a fifth embodiment of this invention. Whereas the embodiments described so far have a configuration in which a plurality of chip dies are divided into two groups and system control signals are used to select these groups, the fifth embodiment is applicable to a configuration in which chip dies are not divided into groups. The semiconductor device shown in FIG. **9** is an example of a memory module having a configuration in which first to eighth chip dies D**0** to D**7** are controlled by a single system control signal C**0**.

[0105] Each of the shown chip dies D**0** to D**7** has, as shown in FIG. **4**, 1-Gbyte memory capacity and 256 data transfer through electrodes (DQ). Thus, even this configuration using a single system control signal C**0** to control the chip dies can output ×32-bit wide data signals DQ from the chip dies D**0** to D**7** at a data transfer speed of about 200 MHz, and hence can reduce the power consumption of the chip dies.

[0106] Referring to FIG. **10**, a semiconductor device according to a sixth embodiment of this invention will be described. The shown semiconductor device forms a memory module. If a chip die forming a memory module comes into contact with a conductive material, human body or the like, a discharge path will be generated in a circuit to cause electrostatic discharge (ESD), possibly resulting in breakdown of the circuit. Therefore, it is a common practice in conventional memory modules such as DRAMs to provide an ESD protection circuit. However, no study has been made of an ESD protection circuit suitable for use in memory modules having stacked chip dies (stacked memory devices according to this invention).

[0107] As shown in FIG. **10**, ESD protection circuits **42** are provided respectively between data signal transfer through electrodes formed in the vias V**1000** to V**1007** of the chip die **210** shown in FIG. **1** and the switches **1000** to **1007** connected to the data signal transfer through electrodes. The provision of the ESD protection circuits **42** in association with the respective through electrodes makes it possible to reduce significantly the circuit scale of the ESD protection circuit **42** for each chip die, and for each through electrode (connected to the terminal (BGA) of the stacked memory device).

[0108] As described above with reference to FIG. **1**, the switches **1000** to **1007** are configured such that one of the eight switches is selected by the ROM **2700** (eight switch control signal lines are extended out from the ROM **2700**). Therefore, when viewed from the terminals (BGA) of the stacked memory device in which a plurality of chip dies have been stacked, the same number of ESD protection circuits **42** as that of the stacked chip dies are in an operable state, which makes it possible to obtain a memory module having sufficiently high resistance against ESD after being packaged (after the assembly process).

[0109] On the other hand, when chip dies are tested on the wafer (before the assembly process), a pad **44** is provided on each chip die as shown in FIG. **10** such that the pad **44** comes into contact with a probing pin only during testing of the wafer (in the state of FIG. **4**), and all the switches **1000** to **1007** are rendered conductive by turning high all the output signals from the ROM **2700** before the setting. This makes it possible to increase the capacity of a single ESD protection circuit **42** by eight times, and thus to prevent the breakdown due to ESD.

[0110] FIG. **11** shows a test switch control circuit **480** for rendering all the switches **1000** to **1007** conductive before setting the ROM **2700**. The shown circuit has a non-volatile element **46** which is an element of the ROM **270**, a switch **48**, a flip-flop formed by two inverter circuits **50** and **52**, and capacitors C**1** and C**2**. The shown switch **48** is formed by a high-voltage transistor having ESD resistance (an FET transistor having a gate insulation film with a greater thickness than that of a transistor in a general logic circuit, or an MOS/MIS-type FET transistor in which nodes of a diffusion layer are thicker or deeper than those in general transistors). The output of the inverter circuit **50** is supplied to the switches **1000** to **1007**.

[0111] According to the circuit configuration shown in FIG. **11**, when a test signal (Test) is given (i.e., a test signal is activated) during testing of a chip die, the switch **48** selects a low voltage side power supply (VSS), output data from the inverter **50** (information "1") is supplied to the switches **1000** to **1007** shown in FIG. **10**, whereby all the switches **1000** to **1007** are made conductive, and the eight ESD protection circuits **42** are connected to the pad **44**. This makes it possible to conduct a wafer test in the state in which sufficient ESD resistance is kept. In the last step of the wafer test, the non-volatile element **46** is set to information "0" (PROGRAM) or "1" (ERASE) according to ON/OFF of the corresponding switch for each type of products (see FIG. **4**). After completion of the assembly process (i.e., after the product has been mounted) and when no test is conducted, the switch connects between the non-volatile element **46** and the flip-flop. Accordingly, no bus fight will occur between IO circuits of different chip dies due to conduction (competition) with other switches. The test signal input to the switch **48** formed by a high voltage transistor is supplied through a probing pad (not shown). This is why the switch **48** is formed by a high voltage transistor. The capacitors C**1** and C**2** have functions to prevent the bus fight between IO circuits of different chip dies when the power is turned on (when the external power supply VDD of the device rises in the power-up sequence) during operation of the stacked memory device after the assembly process, and to keep the output of the respective flip-flops corresponding to all the switch circuits at information "0" (Low) until the output voltage of the non-volatile element **46** is determined.

[0112] FIG. **12** shows a modification example of the memory module according to the sixth embodiment of the invention. This example is different from the circuit shown in FIG. **10** in that an ESD protection circuit **42** is connected to each of the IO circuits **2500** of the chip dies. Like the circuit shown in FIG. **10**, the provision of the ESD protection circuit **42** for each of the IO circuits **2500** of the chip dies also makes it possible to reduce the circuit scale of the ESD protection circuit **42** in comparison with the conventional techniques.

[0113] Describing more specifically, when a stacked memory device has an IO chip such as a controller for controlling a plurality of chip dies provided between the chip die

210 and the stacking substrate **20** (in other words, when through silicon vias (TSV) of the chip die **210** are not connected to external terminals (BGA) of the stacked memory device), there is no need of taking into consideration of human model (HM) ESD resistance, but only of man machine model (MM) ESD resistance. This makes it possible to reduce the ESD circuit scale.

[0114] Further, like the description above (FIG. **11**), the test switch control circuit **480** is controlled to the low voltage side power supply (VSS) only during the wafer test (in the state shown in FIG. **4**), so that all the switches **1000** to **1007** are rendered conductive and the total parasitic capacitance of the eight vias V**1000** to V**1007** is used as the assist capacitance for the ESD circuit. This provides further improvement in the ESD resistance.

[0115] Referring to FIGS. **13**A and **13**B, a semiconductor device according to a seventh embodiment of this invention will be described. The semiconductor device according to this seventh embodiment has a wafer to be measured **60** on which chip dies having no ESD protection circuit are formed, and a dummy wafer **62** on which chip dies having at least an ESD protection circuit and a probing terminal mounted.

[0116] Describing more specifically, as shown in FIG. **13**B, each of the chip dies **61** on the wafer to be measured **60** has, like those shown in FIG. **1**, IO circuits, input/output lines, a plurality of switches (SW) connected to the input/output lines, through electrodes formed in TSV vias and connected to the respective switches, and ROMs.

[0117] On the other hand, each of the chip dies **63** on the dummy wafer **62** has TSV vias formed at the same positions as those in the chip dies on the wafer to be measured **60**, and ESD protection circuits **65** at least connected to the through electrodes. Further, in the chip dies **63** on the dummy wafer **62**, a pad is connected to each of the through electrodes, such that the pad comes into contact with a probing needle only during a wafer test. The chip dies **63** may be mounted with other functional circuits for conducting tests.

[0118] In order to conduct a wafer test on the chip dies **61** on the wafer to be measured **60**, as shown in FIG. **13**A, the wafer to be tested **60** is brought into contact (for example, into close contact) with the dummy wafer **62**, so that the vias of the wafer to be tested **60** are electrically connected to the vias of the dummy wafer **62**, and the probing needle is bought into contact with the pads on the dummy wafer **62**. This configuration provides an advantage that there is no need of providing ESD protection circuits or probing terminals in the chip dies **61** which will be a final product.

[0119] When a memory module (stacked memory device including an IO chip such as a controller) is fabricated by stacking the chip dies **61** obtained from the wafer to be measured and packaging them, the chip dies are electrically connected only to the memory controller through the vias but not connected to any terminal outside the memory module. Thus, an additional advantage is provided that the human model (HM) resistance need not be taken into consideration.

[0120] It should be understood that the invention is applicable regardless of fabrication methods and configurations of the TSVs and bumps.

[0121] Furthermore, according to this invention, it is obvious that information of the ROMs for controlling the switches or the like as disclosed here, or switch controlling information replaceable with the ROMs can be supplied by the controller to each of the chip dies stacked by means of the TSV technology.

[0122] Here are exemplary aspects of this invention.

[0123] A first aspect of this invention provides a semiconductor device including a plurality of electrodes passing through a semiconductor substrate; switches connected to the respective electrodes; first signal lines each connected in common to a plurality of the switches; and first circuits connected to the respective first signal lines, wherein only one of the switches is selectively rendered electrically conductive.

[0124] In a second aspect of this invention according to the first aspect, the invention provides the semiconductor device further including ROMs which are preset to a predetermined value for selectively rendering the switches electrically conductive.

[0125] In a third aspect of this invention according to the second aspect, the invention provides the semiconductor device wherein the ROMs are set in association with groups which at least data signals of the semiconductor device belong to.

[0126] In a fourth aspect of this invention according one of the first to third aspects, the invention provides the semiconductor device further including second switches for connecting a plurality of the first signal lines to one of the first circuits.

[0127] In a fifth aspect of this invention according to the fourth aspect, the invention provides the semiconductor device further including second ROMs which are preset to a predetermined value for selectively rendering the second switches electrically conductive, wherein it is set in the second ROMs whether data is compressed or not.

[0128] In a sixth aspect of this invention according to one of the first to fifth aspects, the invention provides the semiconductor device wherein each of the first signal line has a probing terminal which is used only during probing.

[0129] In a seventh aspect of this invention according to the sixth aspect, the invention provides the semiconductor device including an ESD protection circuit connected to each of the first signal lines.

[0130] In an eighth aspect of this invention according to one of the first to sixth aspects, the invention provides the semiconductor device including ESD protection circuits respectively connected to the plurality of electrodes.

[0131] In a ninth aspect of this invention according one of the first to eighth aspects, the invention provides the semiconductor device including a third switch and a latch circuit between the switches and the ROM.

[0132] In a tenth aspect of this invention according to the ninth aspect, the invention provides the semiconductor device wherein the third switch is supplied, by a test signal, with an input of a control signal to render the third switch electrically conductive.

[0133] In an eleventh aspect of this invention according to the tenth aspect, the invention provides the semiconductor device wherein a plurality of the electrodes are connected to the first signal lines by activation of the test signal.

[0134] In a twelfth aspect of this invention according to the first aspect, the invention provides the semiconductor device including ESD protection circuits respectively connected to the plurality of electrodes, and a third switch and a latch circuit between the switches and the ROM, wherein the third switch is rendered electrically conductive by a test signal, and a plurality of the ESD circuits are connected to the first signal lines by activation of the test signal.

[0135] In a thirteenth aspect of this invention according to the first aspect, the invention provides the semiconductor device wherein each of the first circuits has a plurality of

output transistors for driving the first signal lines, and a control signal is supplied to change the number of the output transistors to be activation-controlled according to the number of the semiconductor devices stacked.

[0136] In a fourteenth aspect of this invention according to the thirteenth aspect, the invention provides the semiconductor device further including a third ROM, the control signal being connected to the third ROM.

[0137] In a fifteenth aspect of this invention according to the first aspect, the invention provides the semiconductor device wherein the operating power supply voltage of the first circuits is changeable according to the number of stacked semiconductor devices.

[0138] In a sixteenth aspect of this invention according to the fifteenth embodiment, the invention provides the semiconductor device wherein each of the first circuits is a circuit for inputting and outputting stored information, and the stored information of multiple bits (I/O) is formed by a plurality of the electrodes.

[0139] In a seventeenth aspect of this invention, the invention provides a semiconductor device having a semiconductor substrate provided with a plurality of electrodes passing through the substrate, wherein the semiconductor substrate has switches connected to the respective electrodes, first signal lines each connected in common to a plurality of the switches, and first circuits connected to the respective first signal line, and is designed such that one of the plurality of the switches is selectively made electrically conductive, and wherein a plurality of the semiconductor substrates are stacked, the electrodes are connected to each other, and the switches selectively made conductive are located at mutually different positions among the semiconductor substrates.

[0140] In an eighteenth aspect of this invention according to the seventeenth aspect, the invention provides the semiconductor device wherein the electrodes connected to the respective switches made conductive at the mutually different positions form memory information of multiple bits (I/O).

[0141] In a nineteenth aspect of this invention according to the seventeenth aspect, the invention provides the semiconductor device wherein the electrodes connected to the respective switches made conductive at the mutually different positions form an activation select group (CS**0**, CS**1** or CLK) for the semiconductor substrates.

[0142] In a twentieth aspect of this invention according to one of the seventeenth to nineteenth aspects, the invention provides the semiconductor device having a second semiconductor substrate (controller chip) for controlling a plurality of the semiconductor substrates, wherein the mutually connected electrodes of the plurality of the semiconductor substrate are connected to electrodes of the second semiconductor substrate.

[0143] In a twenty-first aspect of this invention according to the twentieth aspect, the invention provides the semiconductor device wherein the electrodes of the second semiconductor substrate are connected to external electrodes of the semiconductor device.

[0144] In a twenty-second aspect of this invention according to the twentieth or twenty-first aspect, the invention provides the semiconductor device wherein ESD circuits are respectively connected to the stacked and mutually connected electrodes.

[0145] In a twenty-third aspect of this invention according the seventeenth aspect, the invention provides the semiconductor device wherein each of the first circuits has a plurality of output transistors for driving the first signal lines, and the semiconductor device further has a control signal for changing the number of the output transistors to be activation controlled according the number of the stacked semiconductor substrates.

[0146] In a twenty-fourth aspect of this invention according to the seventeenth aspect, the invention provides the semiconductor device wherein the operating power supply voltage of the first circuits is changeable according to the number of the stacked semiconductor substrates.

[0147] Although the above description of the exemplary embodiments of the invention has been made in terms of a case in which the invention is applied to a memory module formed of a DRAM, this invention is applicable not only to DRAM (volatile memory) but also to other semiconductor devices formed by stacking chips, for example a semiconductor device formed by stacking nonvolatile memories. For example, the semiconductor device including the memory chips of the invention may include other types of chips. Such chips may, for example, be a controller chip for controlling a plurality of memory chips performing high-bandwidth data communication through the memory chips and TSVs according to this invention. Specifically, such other types of chips include a CPU (Central Processing Unit), an MCU (Micro Control Unit), a DSP (Digital Signal Processor), an ASIC (Application Specific Integrated Circuit), an ASSP (Application Specific Standard Circuit) and so on. This invention is applicable in general to semiconductor products including these chips. A device to which this invention is applied is applicable to semiconductor devices such as a POP (Package on Package) or the like. Transistors used in the memory cells or logic circuits may be field effect transistors (FETs), and are applicable not only to an MOS (Metal Oxide Semiconductor) but also to various FETs such as an MIS (Metal-Insulator Semiconductor), and a TFT (Thin Film Transistor). Some of the transistors may be the types of transistors than FETs. Further, P-channel type transistors or PMOS transistors forming a so-called CMOS logic circuit are representative examples of first conduction type transistors, while N-channel type transistors or NMOS transistors are representative examples of second conduction type transistors. Further, the semiconductor substrates are not limited to P-type semiconductor substrates, but may be N-type semiconductor substrates, semiconductor substrates of an SOI (Silicon on Insulator) structure, or even other types of semiconductor substrates.

[0148] According to this invention, the degree of freedom in design can be improved by combining chip dies having the same configuration. Further, according to this invention, the data transfer speed of the memory module as a whole can be increased without the need of increasing the data transfer speed from the chip dies, which provides an advantage that the consumption current of the chip dies can be reduced. Still further, the chip dies can be operated at a low operating frequency, and thus the manufacturing yield of the chip dies can be enhanced.

What is claimed is:

1. A device, comprising:

a semiconductor substrate;

a plurality of electrodes which pass through the semiconductor substrate;

switches which are connected to the electrodes, respectively;

a first signal line which is commonly connected to the switches; and

a first circuit which is connected to the first signal line,

wherein only one of the switches is selectively put into a conductive state.

2. The device as claimed in claim **1**, further comprising:

a ROM which selectively puts the switches into the conductive state.

3. The device as claimed in claim **2**, wherein the ROM is set in association with a group which at least data signals of the semiconductor device belong to.

4. The device as claimed in claim **1**, further comprising:

a second switch which connects a plurality of the first signal lines to the first circuit.

5. The device as claimed in claim **1**, wherein the first signal line has a probing terminal which is used only during probing.

6. The device as claimed in claim **5**, further comprising:

an ESD protection circuit which is connected to any one of the first signal line and the electrodes.

7. The device as claimed in claim **2**, further comprising:

a plurality of ESD protection circuits which are connected to the electrodes, respectively; and

a third switch which is provided between the switches and the ROM;

a latch circuit;

wherein the third switch is put into the conductive state by a test signal, and the ESD circuits are connected to the first signal line by activation of the test signal.

8. The device as claimed in claim **1**, wherein an operating power supply voltage of the first circuit is variable depending upon the number of semiconductor devices to be stacked.

9. The device as claimed in claim **2**, wherein the first circuit is a circuit for inputting and outputting stored information, and the stored information of a plurality of bits (I/O) is input and output through the electrodes.

10. The device as claimed in claim **2**, wherein the first circuit is a control signal processing circuit for controlling the semiconductor substrate, and the semiconductor substrate is controlled by the electrodes.

11. A device having a plurality of stacked semiconductor substrates,

wherein each of the semiconductor substrates comprises:

a plurality of electrodes which pass through the semiconductor substrate;

switches which are connected to the electrodes, respectively;

a first signal line which is commonly connected to the switches; and

a first circuit which is connected to the first signal line;

wherein only one of the switches is selectively put into a conductive state,

the electrodes of the stacked semiconductor substrates are mutually connected, and

the switches of the stacked semiconductor substrates, which selectively are put into the conductive state, are located at mutually different positions among the semiconductor substrates.

12. The device as claimed in claim **11**, wherein the electrodes connected to the respective switches which are put into the conductive state at the mutually different positions input and output stored information of a plurality of bits (I/O) in parallel.

13. The device as claimed in claim **12**, wherein the electrodes connected to the respective switches which are put into the conductive state at the mutually different positions are electrodes for control signals controlling the semiconductor substrates.

14. The device as claimed in claim **11**, further comprising:

a second semiconductor substrate as a controller chip, which controls the semiconductor substrates,

wherein the mutually connected electrodes of the semiconductor substrates are connected to electrodes of the second semiconductor substrate.

15. The device as claimed in claim **14**, wherein the electrodes of the second semiconductor substrate are connected to an external electrode of the semiconductor device.

16. The device as claimed in claim **14**, wherein ESD circuits are respectively connected to the electrodes which are stacked and mutually connected.

17. The device as claimed in claim **11**, wherein the first circuit has a plurality of output buffers for driving the first signal line, and the output buffers are selectively operated depending upon the number of the stacked semiconductor substrates to change a driving capacity of the first circuit.

18. The device as claimed in claim **11**, wherein an operating power supply voltage of the first circuit is variable depending upon the number of stacked semiconductor substrates.

19. A chip die for inputting and outputting data signals of a predetermined number of bits in parallel, wherein the chip die comprises:

data signal transfer through electrodes, the number of which is determined by the predetermined number of bits and a number of the chip dies when the chip dies are stacked; and

switches for respectively selecting the data signal transfer through electrodes.

20. The chip die as claimed in claim **19**, further comprising:

through electrodes for control signals, which individually select the chip dies.

21. A system comprising:

a plurality of stacked chip dies; and

a controller for controlling the chip dies,

wherein each of the chip dies comprises:

data signal transfer through electrodes, the number of which is determined by a predetermined number of bits and a number of the chip dies when the chip dies are stacked; and

switches for respectively selecting the data signal transfer through electrodes, and

wherein the controller has a parallel-serial conversion circuit for converting data signals which are input to and output from the chip dies via the data signal transfer through electrodes selected by the switches.

22. The system as claimed in claim **21**, wherein the controller is formed on a chip stacked together with the chip dies.

23. The system as claimed in claim **21**, wherein the controller is provided outside the stacked chip dies.

* * * * *