UNITED STATES PATENT AND TRADEMARK OFFICE

BEFORE THE PATENT TRIAL AND APPEAL BOARD

NETFLIX, INC.,
Petitioner

v.

VL COLLECTIVE IP, INC.
Patent Owner

Case IPR2023-00891
Patent 8,605,794 B2

PATENT OWNER'S NOTICE OF APPEAL

Via EMAIL
efileSO@uspto.gov

Via P-TACTS
Patent Trial and Appeal Board

Via CM/ECF
United States Court of Appeals for the Federal Circuit

Pursuant to 35 U.S.C. §§ 141(c), 142, and 319, and 37 C.F.R. §§ 90.2(a), 90.3(a), and 90.3(b)(1), Patent Owner VL Collective IP LLC ("Patent Owner") provides notice that it appeals to the United States Court of Appeals for the Federal Circuit from the Final Written Decision of the Patent Trial and Appeal Board dated January 7, 2025 ("Final Written Decision") and from all underlying and related orders, decisions, rulings, and opinions regarding U.S. Patent No. 8,605,794 ("the '794 patent") in Inter Partes Review IPR2023-00891. In accordance with 37 C.F.R. 90.2(a)(3)(ii), the expected issues on appeal include, but are not limited to, the Patent Trial and Appeal Board's determination in its Final Written Decision that Petitioner Netflix, Inc. ("Petitioner") proved by a preponderance of the evidence that claims 1-22 of the '794 patent are unpatentable, and any other finding or determination supporting or related to that determination, as well as all other issues decided adversely to Patent Owner in any orders, decisions, rulings, or opinions. A copy of the decision being appealed is attached to this Notice.

Pursuant to 35 U.S.C. § 142 and 37 C.F.R. § 90.2(a), this Notice is being filed with the Director of the United States Patent and Trademark Office, and a copy of this Notice is being filed concurrently with the Patent Trial and Appeal Board. In addition, a copy of this Notice and the required docketing fees are being filed with the Clerk's Office for the United States Court of Appeals for the Federal Circuit via CM/ECF.

Date: March 10, 2025

By: /s/ Christine E. Lehman

Christine E. Lehman
PTO Reg. No. 38,535
REICHMAN JORGENSEN
LEHMAN & FELDBERG LLP
1909 K Street, NW, Suite 800
Washington, DC 20006
(202) 894-7311
clehman@reichmanjorgensen.com
Counsel for Patent Owner

CERTIFICATE OF SERVICE

The undersigned certifies that on March 10, 2025 that I caused a paper copy of **Patent Owner's Notice of Appeal** to be sent by an express carrier to lead counsel for respondent Netflix, Inc. at the following address:

Aliza George Carrano
WILLKIE FARR & GALLAGHER LLP
1875 K Street NW
Washington, DC 20006

Additionally, a copy was served by email, as agreed to by counsel, upon the following counsel for Petitioner:

Aliza George Carrano (Reg. No. 70,637)
accarrano@willkie.com
Dane Sowers (Reg. No. 79,653)
dsowers@willkie.com
WILLKIE FARR & GALLAGHER LLP
1875 K Street NW
Washington, DC 20006

Indranil Mukerji (Reg. No. 46,944)
imukerji@cov.com
Stephen A. Marshall (*pro hac vice*)
smarshall@cov.com
One CityCenter
850 Tenth Street, NW
Washington, DC 20001

In accordance with 37 C.F.R. §§ 90.2(a)(1) and 104.2(b), the undersigned hereby certifies that, in addition to being filed electronically through the Board's PTACTS System, **Patent Owner's Notice of Appeal** was filed and served by email on March 10, 2025 with the Director of the United States Patent and Trademark

Office, at the following address: efileSO@uspto.gov.

In accordance with 37 C.F.R. § 90.2(a)(2), the undersigned hereby certifies that on March 10, 2025 a true and correct copy of Patent Owner's Notice of Appeal was filed electronically with the Clerk's Office of the United States Court of Appeals for the Federal Circuit via CM/ECF.

Date: March 10, 2025

/s/ Christine E. Lehman
Christine E. Lehman
PTO Reg. No. 38,535
Counsel for Patent Owner

Trials@uspto.gov
571-272-7822

Paper 55
Date: January 7, 2025

UNITED STATES PATENT AND TRADEMARK OFFICE

BEFORE THE PATENT TRIAL AND APPEAL BOARD

NETFLIX, INC.,
Petitioner,

v.

VL COLLECTIVE IP LLC,
Patent Owner.

IPR2023-00891
Patent 8,605,794 B2

Before KARL D. EASTHOM, JEFFREY S. SMITH, and
DAVID C. McKONE, *Administrative Patent Judges*.

Opinion for the Board filed by Administrative Patent Judge EASTHOM.

Opinion Concurring filed by Administrative Patent Judge McKONE.

DECISION
Final Written Decision
Determining All Challenged Claims Unpatentable
35 U.S.C. § 314(a)

Unified Patents, LLC ("Petitioner") filed a Petition pursuant to 35 U.S.C. §§ 311–319 to institute an *inter partes* review of claims 1–22 of U.S. Patent No. 8,605,794 B2 (Ex. 1001, "the '794 patent"). Paper 2 ("Pet."). VL Collective IP LLC ("Patent Owner") filed a Preliminary Response. Paper 10 ("Prelim. Resp.").

After the Institution Decision (Paper 17, "Inst. Dec."), Patent Owner filed a Response (Paper 28, "PO Resp."), Petitioner filed a Reply (Paper 40, "Reply"), and Patent Owner filed a Sur-reply (Paper 44). After the briefing, the Board conducted an Oral Hearing and entered a Transcript thereof in the record. Paper 54 ("Tr.").

For the reasons set forth in this Final Written Decision pursuant to 35 U.S.C. § 318(a), we determine that Petitioner demonstrates by a preponderance of evidence that challenged claims 1–22 of the '794 patent are unpatentable.

I. BACKGROUND

A. The '794 Patent

The '794 patent describes methods and devices that "enable[] content-related first and second data segments to be synchronized." Ex. 1001, 2:24–27.

Figure 1 of the ’794 patent follows:

FIG 1

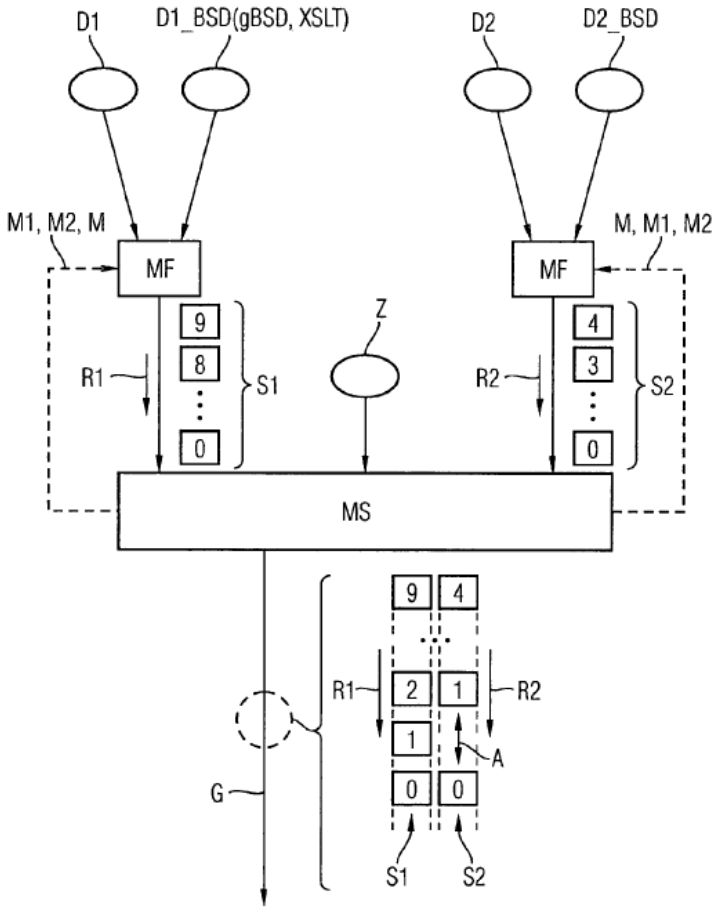

Figure 1 is a block diagram of a system and video and audio data streams that the system synchronizes. Ex. 1001, 3:46–47, 3:65–4:1. D1 represents the video data stream, illustrated as segmented into ten data segments S1. *Id.* at 4:3–5. Similarly, D2 represents the audio data stream, illustrated as segmented into five data segments S2. *Id.* at 4:6–8.

Synchronization module MS synchronizes the video and audio segments “on the basis of a predefinable assignment rule Z.” Ex. 1001, 5:10–13. In the illustrated example, where the number of video data segments is twice the number of audio data segments, assignment rule Z

outputs each audio data segment with every second video data segment (as indicated in the lower right portion of the drawing). *Id.* at 5:38–58. The '794 patent describes other examples of assignment rules. *Id.* at 5:59–6:42.

B. Illustrative Claim

Independent claim 1 is representative and follows:

> 1.[pre] A method for synchronizing content-related first data segments of a first data file and content-related second data segments of a second data file, the method comprising:
>
> [a][1] sequentially outputting, by a device for synchronizing content-related data, the content-related first data segments and the content-related second data segments according to their chronological sequence in such a way that
>
> [a][2] each of the content-related second data segments is output together with an associated one of the content-related first data segments on the basis of an assignment rule for assigning each one of the content-related second data segments to one of the content-related first data segments.

D. Asserted Grounds of Unpatentability

Petitioner challenges claims 1–22 on the following grounds. Pet. 3.

Claim(s) Challenged	35 U.S.C. §[1]	References
1–5, 9–13, 15–17, 20, 21	102(a), 102(e)	Comps[2]
6–8, 22	103(a)	Comps, Wan[3]

[1] The Leahy-Smith America Invents Act ("AIA"), Pub. L. No. 112-29, 125 Stat. 284, 287–88 (2011), amended 35 U.S.C §§ 102, 103(a) (effective Mar. 16, 2013). Petitioner contends that "the earliest possible priority date of . . . the '794 patent is April 12, 2005." Pet. 11 (citing Ex. 1001, codes (22), (30), (86)). Patent Owner "does not dispute this priority date here." PO Resp. 12. Accordingly, the pre-AIA version of §§ 102, 103(a) applies for the Final Written Decision.

[2] US Pat. No. 7,386,782 B2, filed Sept. 13, 2001, issued June 10, 2008. Ex. 1004.

[3] US Pub. No. 2004/0024898 A1, published Feb. 5, 2004. Ex. 1005.

Claim(s) Challenged	35 U.S.C. §[1]	References
14	103(a)	Comps, Ahn[4]
18, 19	103(a)	Comps, Kim[5]

Petitioner also relies on a Declaration by Benjamin B. Bederson, Ph.D. Ex. 1003. Patent Owner relies on a Declaration by Michael T. Goodrich, Ph.D. Ex. 2011.

E. Real Parties in Interest

Petitioner identifies itself as a real party in interest. Pet. 76. In addition to itself, Patent Owner identifies its parent, VL IP Holdings LLC, and VideoLabs, Inc., which is a parent of VL IP Holdings LLC, as real parties in interest. Paper 4, 2.

F. Related Matters

The parties collectively identify the following related matters as involving the '794 patent: *VideoLabs, Inc. v. Netflix Inc.*, No. 1:22-cv-00229 (D. Del.); *VideoLabs, Inc. v. Amazon.com, Inc.*, No. 6:22-cv-01167 (W.D. Tex.); *VideoLabs, Inc. v. Amazon.com, Inc.*, No. 2:22-cv-01451 (W.D. Wash.); *VideoLabs, Inc. v. Amazon.com, Inc.*, No. 6:22-cv-00079 (W.D. Tex.); *Starz Entertainment, LLC v. VL Collective IP, LLC*, No. 1:21-cv-01448 (D. Del.); *VideoLabs, Inc. v. Apple Inc.*, No. NDCA-3-23-cv-01307 (N.D. Cal.); *Unified Patents, LLC v. VL Collective IP, LLC*, IPR2022-01086, Paper 37 (PTAB Dec. 15, 2023) (final written decision holding

[4] US Pub. No. 2004/0098398 A1, published May 20, 2004. Ex. 1006.
[5] US Pub. No. 2003/0101364 A1, published May 29, 2003. Ex. 1007.

claims 1, 3, 5, 9, 12, 13, and 15 unpatentable, and claims 20 and 21 not unpatentable).[6] Pet. 76–77; Paper 4, 2; Paper 7, 2.

II. ANALYSIS

A. Legal Principles

Under 35 U.S.C. § 102, anticipation requires a single prior art reference to disclose each and every element in a claim, arranged as recited in the claim. *Net MoneyIN, Inc. v. VeriSign, Inc.*, 545 F.3d 1359, 1369 (Fed. Cir. 2008); *Karsten Mfg. Corp. v. Cleveland Golf Co.*, 242 F.3d 1376, 1383 (Fed. Cir. 2001). However, "the reference need not satisfy an *ipsissimis verbis* test." *In re Gleave*, 560 F.3d 1331, 1334 (Fed. Cir. 2009); *In re Bond*, 910 F.2d 831, 832–33 (Fed. Cir. 1990). Prior art references must be "considered together with the knowledge of one of ordinary skill in the pertinent art." *In re Paulsen*, 30 F.3d 1475, 1480 (Fed. Cir. 1994).

Under 35 U.S.C. § 103(a), a claim is unpatentable for obviousness if the differences between the claimed subject matter and the prior art are "such that the subject matter as a whole would have been obvious at the time the invention was made to a person having ordinary skill in the art to which said subject matter pertains." *KSR Int'l Co. v. Teleflex Inc.*, 550 U.S. 398,

---

[6] Patent Owner initially indicated that if it "prevails in" IPR2022-01086, it "intends to seek termination of this Petition on the theory that Petitioner is a real party-in-interest in IPR2022-01086." Prelim. Resp. 35 (citing 35 U.S.C § 315 (e), 35 U.S.C. §§ 314(a), 325(d); *Samsung Electronics Co., Ltd. v. MemoryWeb, LLC*, IPR2022-00222, Paper 44 (PTAB Aug. 22, 2023)). Although the parties filed extensive briefing on this issue including a request to terminate the instant proceeding after the Board ordered that Petitioner provide discovery related to an alleged real party-in-interest based on Patent Owner's request for same, Patent Owner does not raise the issue in the Patent Owner Response. *See* Papers 20–23, 26, 31, 33, 35, 37, 39 (Denying Patent Owner's Motion to Terminate the Proceeding).

406 (2007). The question of obviousness is resolved on the basis of underlying factual determinations, including (1) the scope and content of the prior art; (2) any differences between the claimed subject matter and the prior art; (3) the level of skill in the art; and (4) when in evidence (none here), objective indicia of nonobviousness, i.e., secondary considerations. *Graham v. John Deere Co.*, 383 U.S. 1, 17–18 (1966).

Additionally, the obviousness inquiry typically requires an analysis of "whether there was an apparent reason to combine the known elements in the fashion claimed by the patent at issue." *KSR*, 550 U.S. at 418 (citing *In re Kahn*, 441 F.3d 977, 988 (Fed. Cir. 2006) (requiring "articulated reasoning with some rational underpinning to support the legal conclusion of obviousness")); *accord In re Warsaw Orthopedic, Inc.*, 832 F.3d 1327, 1333 (Fed. Cir. 2016) (citing *DyStar Textilfarben GmbH & Co. Deutschland KG v. C.H. Patrick Co.*, 464 F.3d 1356, 1360 (Fed. Cir. 2006)).

B. Level of Ordinary Skill in the Art

Petitioner proposes that a person of ordinary skill in the art "would have had a bachelor's degree in electrical or computer engineering, or a closely related scientific field such as computer science, and two years of work experience with multimedia systems." Pet. 12. Petitioner adds that "[a] lack of experience could be remedied with additional education (*e.g.*, a master's degree), and likewise, a lack of education can be remedied with additional work experience (*e.g.*, 4–5 years)." *Id.* (citing Ex. 1003 ¶ 30). Patent Owner states that Dr. Goodrich "proposes a somewhat different level," but submits that its "Response establishes that Petitioner's arguments fail even under its definition." PO Resp. 12 (citing Ex. 2011 ¶¶ 50–54).

Petitioner's proposal is consistent with the level of skill reflected by the prior art and supported by the testimony of Dr. Bederson. *See* Ex. 1003 ¶¶ 28–30. Dr. Goodrich testifies that "Dr. Bederson and Petitioner offer a slightly different definition of the POSITA, which is similar to my definition" and that his "opinions would not change were" he "to adopt the definition of POSITA offered by Petitioner." Ex. 2011 ¶ 54. Accordingly, we adopt Petitioner's proposal, which is materially the same as Patent Owner's proposal for purposes of this Final Written Decision, as Dr. Goodrich testifies. *See Okajima v. Bourdeau*, 261 F.3d 1350, 1355 (Fed. Cir. 2001) (the prior art may reflect an appropriate level of skill in the art).

C. Claim Construction

The Board uses "the same claim construction standard that would be used to construe the claim in a civil action under 35 U.S.C. § 282(b), including construing the claim in accordance with the ordinary and customary meaning of such claim as understood by one of ordinary skill in the art and the prosecution history pertaining to the patent." 37 C.F.R. § 42.100(b) (2019); *see also Phillips v. AWH Corp.*, 415 F.3d 1303, 1312–13 (Fed. Cir. 2005) (en banc). "Petitioner applies the plain and ordinary meaning of all claim terms and contends that no claim terms require specific construction to resolve the unpatentability issues presented herein." Pet. 21. Patent Owner proposes certain constructions. PO Resp. 12–38.

Apart from some of the terms discussed below, it is not necessary to construe any other terms explicitly for purposes of this Final Written Decision. *See Nidec Motor Corp. v. Zhongshan Broad Ocean Motor Co.*, 868 F.3d 1013, 1017 (Fed. Cir. 2017) ("[W]e need only construe terms 'that are in controversy, and only to the extent necessary to resolve the

controversy.'" (quoting *Vivid Techs., Inc. v. Am. Sci. & Eng'g, Inc.*, 200 F.3d 795, 803 (Fed. Cir. 1999))).

1. *content-related data segments*

Claim 1 recites "content-related . . . data segments." Patent Owner construes this phrase as "segments of content data that have a syntactical meaning within the respective data file." PO Resp. 12. As Patent Owner notes, the '794 patent specification states that "[***t***]***he term 'content-related' is understood to mean that first and second data segments have a syntactical meaning within the respective data file***, such as e.g. *a plurality* of succeeding second data segments represent the speech signal of a specific speaker within a dialog sequence." *Id.* at 12–13 (quoting Ex. 1001, 4:9–22); Ex. 1001, 4:9–22 (second emphasis added).

The '794 specification supports Patent Owner's position that the emphasized sentence essentially defines the term "content-related . . . data segments." PO Resp. 13–15. However, as Petitioner argues, nothing in the sentence restricts "content-*related* data segments" to "content" only, for example, "sampled audio," instead of also including information relating to the content. *See* Reply 3 (arguing that "the phrase 'content data' appears nowhere in the '794 patent and was not part of the 'inventors' express lexicography' for 'content-related . . . data segments,' as P[atent] O[wner] incorrectly contends"). Petitioner points out that Patent Owner's reliance on the specification refers to "content-***related*** . . . data segments" and "content-***based*** data segments." *Id.* (emphasis by Petitioner) (quoting Ex. 1001, 4:9–22). Petitioner also contends that the specification refers to describing data, contradicting Patent Owner's position that the data segments must include content. *Id.* at 7 ("[A]ccording to ***at least one embodiment*** of the invention,

media data, in particular video or audio data, and/or metadata, in particular encoded according to the XML standard, ***are described by wa***y of the first and/or second data file.") (emphasis by Petitioner) (quoting Ex. 1001, 3:4–10). Moreover, as Petitioner argues, "the word 'data' should be given its plain and ordinary meaning," so that "even if the [unrecited] phrase 'content data' is included in the Board's construction . . . . the term 'content data' would include any *information* relating to the content." *Id.* at 4.

As noted above, both parties point to the specification's definition of "content-related . . . data segments": "The term 'content-related' is understood to mean that first and second data segments have a syntactical meaning within the respective data file, such as e.g. a plurality of succeeding second data segments represent the speech signal of a specific speaker within a dialog sequence." Ex. 1001, 4:9–22. This passage indicates that data segments are content-related or include content, such as a "speech signal," and that these *segments* "*have a syntactical meaning*" with respect to the source of the signal, such as a speaker. *See* Inst. Dec. 9 & n.8, 17 (observing that "[t]he term 'content-related' is somewhat subjective because there is not much guidance in the '794 patent specification as to what a 'syntactical meaning' encompasses"). In context, one plain meaning of the term "syntax" is "[t]he way in which words are put together to form phrases and sentences." Ex. 3002 (THE AMERICAN HERITAGE DICTIONARY OF THE ENGLISH LANGUAGE, 1305 (1976)). However, as indicated above, the '794 patent refers to video images and audio sounds with a syntactical meaning, showing that it embraces broader subject matter than the plain meaning of "syntax."

Patent Owner's argument that the '794 patent refers to "content-based" data segments does not show that "content-related" as claimed means "content" only. *See* Sur-reply 20–21 (Ex. 1001, 4:21–22). The specification states that "[i]n the following description data segments always refer to content-based data segments." Ex. 1001, 4:21–22. But the definition of content-related occurs before this "content-based" statement. *See* Ex. 1001, 4:14–19. Therefore, whatever impact "content-based" has on certain embodiments does not further narrow the definition of "content-related."

Accordingly, we construe "content-related . . . data segments" as "segments of content or data related to content that have a syntactical meaning within the respective data file."[7]

2. "*each of the content-related second data segments is output together with an associated one of the content-related first data segments*" and preamble

Patent Owner argues that "the claims of the '794 patent require assigning 'each' second data segment with a first data segment" such that "each" means "every" content-related second data segment of the second content file. *See* PO Resp. 51. Patent Owner's argument as to "each" with respect to a data file relies on construing the preamble as limiting. *See id.* at 19 ("The antecedent basis for each 'respective data file' is provided in the preamble, which recites "content-related first data segments *of a first data file*" and "content-related second data segments *of a second data file*." (emphasis added to original) (quoting Ex. 1001, claims 1, 9, 22)). As Patent

[7] As Petitioner notes, "the Board previously construed the term to mean "segments of content data that have a syntactical meaning." Reply 2 (citing '086 IPR, Paper 37, 18). However, the particular issue raised here of "content" versus "content-related" was not at issue in that proceeding.

Owner recognizes, however, Petitioner contends "that only certain events should be considered 'content-related . . . data segments'" in Comps so that it is not necessary to address this issue. *Id*. at 51.

That is, even if the preamble is limiting and claim 1 requires synchronizing all of the content-related second data segments of the second data file with at least one of the content-related data segments in the first data file, Petitioner shows that Comps anticipates the claims as set forth below.

Assuming for purposes of this trial that "each" means "every" content-related second data segment in a second data file and that the preamble is limiting, claim 1 does not recite "each" with respect to the first content-related data segments. That is, as discussed in the Institution Decision,

> *not every content-related first data segment need be output with an associated content-related second data segment*. Claim 1 only recites that each content-related second data segment is output together with *a* content-related first data segment. Consistent with the specification, . . . some first data segments might be left unassociated, while no second data segment is left unassociated.

Inst. Dec. 1 n.2 (J. McKone, concurring) (emphasis added).

3. "*assignment rule*"

Claim 1 recites "an assignment rule for assigning each one of the content-related second data segments to one of the content-related first data segments." Claims 9 and 22 recite similar limitations.

By its plain meaning, the "assignment rule for assigning" of claim 1 requires "assigning each one of the content-related second data segments to one of the content-related first data segments." In context, it forms the

"basis" that results in "sequentially outputting . . . the content-related first data segments and the content-related second data segments according to their chronological sequence" such that "each of the content-related second data segments is output together with an associated one of the content-related first data segments."

However, Patent Owner proposes limiting the "assignment rule for assigning each one of the content-related second data segments to one of the content-related first data segments" to narrow its plain meaning such that it becomes an "assignment rule for assigning each one of the content-related second data segments to one of the content-related first data segments, *wherein the assigning is not performed by adjusting the timing of the content-related data segments*." PO Resp. 26 (emphasis added). Patent Owner proposes a similar negative limitation and construction for claims 9 and 22. *See id.*

This negative limitation is not explicitly described in the specification. The whole purpose of synchronization in the '794 patent and the prior art is to adjust the timing at the output of data segments in one data stream relative to another to align the two data streams as desired. *See supra* § I.A; *infra* II.D; Ex. 1001, 2:24–27 ("At least one embodiment of the invention specifies . . . a method . . . or . . . a device which enables content-related first and second data segments to be synchronized in a simple and standard-compliant manner.").

Patent Owner does not point to requisite support in the specification or claim language for narrowing the plain meaning of the recited assignment rule by importing this negative timing limitation (i.e., *wherein the assigning is not performed by adjusting the timing of the content-related data*

segments"). Patent Owner generally argues "there are no embodiments or references where an assignment rule is implemented by adjusting the timing of any of the data segments that are being synchronized." PO Resp. 28 (citing Ex. 1001, 3:65–7:20).

However, even if there are no embodiments that employ an assignment rule that adjusts the timing, "[s]ilence is generally not disclosure" of a negative limitation. *Novartis Pharms. Corp. v. Accord Healthcare, Inc.*, 38 F.4th 1013, 1017 (Fed. Cir. 2022) (citing *Seabed Geosolutions (US) Inc. v. Magseis FF LLC*, 8 F.4th 1285, 1288 (Fed. Cir. 2021) ("[S]ilence does not support reading the claims to exclude gimbaled geophones." (citations omitted)); MPEP § 2173.05(i) (9th ed. Rev. 10.2019, June 2020) ("The mere absence of a positive recitation is not a basis for an exclusion.")). Although "[w]ritten description may take any form, so long as a skilled artisan would read the disclosure as describing the claimed invention," *id.*, our reviewing court states in the context of a "negative limitation," that "[it is] reluctant to read a written description to affirmatively exclude or disclaim an element *absent an express statement* to that effect," *Healthier Choices Mgmt. Corp. v. Philip Morris Prods. S.A.*, No. 2023-1529, 2024 WL 4866805, at *4 (Fed. Cir. Nov. 22, 2024) (emphasis added). Here, there is no express statement for the negative limitation. Although written description support for the negative limitation is a necessary condition, it is not a sufficient condition to import a limitation from the specification. Nevertheless, at the least, the logic of *Heathier Choices* suggests that a lack of an express statement for a negative limitation cautions against importing it into a claim. *See id.*

At one of the passages cited by Patent Owner, the '794 patent specification states that for "at least one" embodiment," "content-related data segments can be output together according to their chronological sequence," which "is of advantage, since the assignment is carried out *without the use of timestamps*." *See* Ex. 1001, 2:36–43 (emphasis added). On the other hand, the '794 patent specification also specifically states that it provides first and second data segments, in one embodiment, "*with an identical timestamp* ('time code')," which occurs at some point *during assignment*—before "output[ting] first and second data segments." *See id.* at 6:43–49 (emphasis added). Providing the segments with one timestamp versus another during assigning implies adjusting the timing of the segments during assigning, because the assignment rule relies on the timestamps for synchronization. *See id.* In other words, this embodiment contradicts Patent Owner's argument that "*in all embodiments*, content-related data segments are assigned to one another without reference to timing information." *See* PO Resp. 28 (emphasis added).

In addition, as indicated above, the specification does not expressly describe an "assignment rule for assigning each one of the content-related second data segments to one of the content-related first data segments, *wherein the assigning is not performed by adjusting the timing of the content-related data segments*." It is not necessary to decide if there is written description support for the negative limitation because even if there is, the specification here does not provide a "clear indication" to limit the

claims.[8] *See Liebel-Flarsheim Co v. Medrad, Inc.*, 358 F.3d 898, 913 (Fed. Cir. 2004) (explaining that "it is improper to read limitations from a preferred embodiment described in the specification—even if it is the only embodiment—into the claims absent a clear indication in the intrinsic record that the patentee intended the claims to be so limited").

As Petitioner states, claims 20 and 21 of the '794 patent, which depend from claims 1 and 9 respectively, recite "assignment rules" that are "not based on a timestamp." Reply 6. Therefore, Petitioner contends that claim differentiation suggests the negative time limitation proposed by Patent Owner is not implicit in the independent claims. *Id.* (citing *Liebel-Flarsheim Co.* 358 F.3d at 910 ("[T]he presence of a dependent claim that adds a particular limitation raises a presumption that the limitation in question is not found in the independent claim.")).

Patent Owner contends that "the doctrine of claim differentiation is a weak canon of construction that cannot overcome the extensive intrinsic and extrinsic evidence present here." Sur-reply 5. Contrary to this argument, there is little, if any, of such evidence to support the proffered negative limitation. As discussed above, at least one embodiment employs timestamps. *See* Ex. 1001, 6:43–49 (providing time stamps for RTP packets for first and second data segments). Asked about this embodiment during the Oral Hearing, Patent Owner stated that the data segments "have the same time[]stamp because they are intended to be output together" "[but] it's not saying that the assignment rule assigns the data segments based on the

[8] Also, the original claims do not recite any negative limitations involving timing. *See* Ex. 1002, 424–428 (substitute specification showing amendments to original claims 1–9).

timestamp"; rather, "some of the data segments, the ones that are assigned to one another using the assignment rule are provided with an identical timestamp." *See* Tr. 34:13–19.[9] However, it is not clear why the '794 patent employs a timestamp to output segments together if the timestamp is not used to identify which segments to output together, which implies that timestamps are part of the "assigning," at least in that embodiment, where claim 1 requires "sequentially outputting" the "data segments" in "chronological sequence" on "the basis of an assignment rule for assigning." *See* Ex. 1001, 6:43–49.

In any event, as noted above, the negative timestamp limitations of dependent claims 20 and 21 (which depend from claims 1 and 9 respectively) recite "wherein the assignment rule is not based on a timestamp." As also noted above, Patent Owner proposes construing claims 1 and 9 so that they effectively recite the "assignment rule for assigning . . . *wherein the assigning is not performed by adjusting the timing of the content-related data segments*." The question is what the overlap is between "assigning is not performed by adjusting the timing" as Patent Owner urges for independent claims 1 and 9, and an "assignment rule not . . . *based* on a timestamp," which dependent claims 20 and 21 recite. Patent Owner argues there is "no conflict with dependent claims 20 and 21." Sur-reply 5. But, absent requisite guidance in the specification or prosecution history or by the

[9] Patent Owner also asserted that use of timestamps was ubiquitous in the prior art and used in the '794 patent. *See id.* at 34:18–22 ("[T]he '794 specification references MPEG 2, MPEG 4, and a person of ordinary skill in the art is going to know that those all involve video and audio with time stamps. It's not that time stamps cease to exist in the context of the '794 patent.").

parties, it is not clear how claims 1 and 9 include *basing* an *assignment rule* on a timestamp (via implication from dependent claims 20 and 21) without *adjusting* the *timing* during assignment. This proposed negative limitation introduces an unnecessary level of ambiguity, and, in any event as noted above, the specification lacks a "clear indication" to limit all the claims with it even if it is somehow part and parcel of each embodiment. *See Liebel-Flarsheim Co.*, 358 F.3d at 913 ("[I]t is improper to read limitations from a preferred embodiment described in the specification—even if it is the only embodiment—into the claims absent a clear indication in the intrinsic record that the patentee intended the claims to be so limited.").

It is telling that Patent Owner relies on importing limitations from the disclosed embodiments that do not use timestamps to limit the claims with its negative limitation. Specifically, Patent Owner first argues that "the assignment rules operat[ing] without adjusting the timing of content-related data segments is an essential and distinguishing feature of the '794 patent," and then Patent Owner quotes the "Summary" section to support importing this negative limitation, arguing that "assignment rules are described as advantageous because 'the assignment is carried out *without the use of timestamps*.'" PO Resp. 27–28 (emphases added) (quoting Ex. 1001, 2:39–43). However, it is not clear how the disclosed "without the use of timestamps" embodiment (Ex. 1001, 2:39–43) supports the proposed negative limitation of "wherein the assigning is not performed by adjusting the timing of the content-related data segments."

Perhaps recognizing the absence of a clear intent to limit the claims via the specification with its negative limitation, Patent Owner argues that "[t]he prosecution history reinforces this understanding of assignment rules."

See PO Resp. 28. Patent Owner contends that "the patentee twice expressly distinguished the claims of the '794 patent over references that synchronized data segments in different data streams by adjusting the timing of the data segments, arguing that these references did not describe an 'assignment rule.'" *Id.*

Even if the patent applicant attempted to distinguish the claims on some basis involving the assignment rule, Patent Owner hedges here and does not argue clearly that the '794 patent applicant's statements during prosecution rise to the level of a clear disavowal. *See* PO Resp. 26–28 (arguing "[t]he prosecution history *reinforces* this understanding of assignment rules" (emphasis added)); Sur-reply 4–5 ("[C]onsistent with Federal Circuit precedent, the file history supports PO's construction *regardless of whether there is disclaimer* (citing *Personalized Media Commc'ns, LLC v. Apple Inc.*, 952 F.3d 1336, 1345 (Fed. Cir. 2020) ("Assuming without deciding that [the patentee's] statements and amendments were inadequate to give rise to a disclaimer, we still find that the prosecution history provides persuasive evidence that informs that meaning of the disputed claim phrase and addresses an ambiguity otherwise left unresolved by the claims and specification.")); Reply 5 (arguing "prosecution disclaimer is a high bar that requires a 'clear and unmistakable' disavowal of claim scope." (quoting *Thorner v. Sony Comput. Ent. Am. LLC*, 669 F.3d 1362, 1366–67 (Fed. Cir. 2012))).

In any event, as explained below, there was no clear disclaimer, disavowal of, or clarification of, the plain meaning of the assignment rule, as Petitioner argues. Contrary to Patent Owner's reliance on *Personalized Media*, there is no "ambiguity otherwise left unresolved by the claims and

specification" as to the plain meaning of the assignment rule, so the rationale of *Personalized Media* does not apply. *See Personalized Media,* 952 F.3d at 1345. As set forth above, and in distinction to *Personalized Media*, the assignment rule has a clear plain meaning. There is nothing ambiguous under the rubric of *Personalized Media* about the assignment rule to resolve.

As Petitioner also notes, the Board determined in the related final written decision that there was no clear disavowal of the assignment rule during prosecution. *See* '086 IPR, Paper 37, 15–18, 20–22 ("the prosecution history is more fairly characterized as 'the applicant argu[ing] that claim 1 was distinguishable over Shin . . . and Rosenau . . . because these references consider time information for synchronization, rather than using an assignment rule for synchronization'"); Reply 5 (same (quoting '086 IPR, Paper 37, 21–22)). As the Board and Patent Owner also noted in the '086 IPR, the district court in related litigation found in its *Markman* hearing that there was no "clear and unmistakable disclaimer of all assignment rules that perform assignments by using exact timing information." '086 IPR, Paper 37, 21 (quoting '086 IPR Ex. 1018, 109:15–22) & n.6 (noting that Patent Owner acknowledged that the "district court did not adopt the disclaimer at the claim construction stage").

The prosecution history supports these prior determinations. That is, during prosecution, the patent applicant did not argue with specificity and clarity how it distinguished claim 1 over Rosenau or Shin. For example, the patent applicant argued that "Applicants respectfully disagree" with the Examiner's finding that "Rosenau discloses an assignment rule for resynchronizing the video data and audio data based on *a sequence number*." Ex. 1002, 203 (emphasis added); *see also* PO Resp. 34 (quoting second

quotation). However, claim 1 did not, and does not, require basing an assignment rule on *a sequence number*. *See* Ex. 1002, 103 (listing claim 1 at the time of the argument). The patent applicant also argued that "Rosenau's "synchronization is done by utilizing a system time clock" and "synchronization is based on the timing information parsed from a data stream, which is loaded into a system time clock counter and incremented according to a predetermined clock frequency." Ex. 1002, 203–204; *see also* PO Resp. 34 (quoting same). However, merely pointing out features of Rosenau without specifically distinguishing the claims on the basis of those features is not a clear disavowal or clarification. *See* PO Resp. 34; Ex. 1002, 203–204.

The patent applicant did attempt to distinguish Rosenau from claim 1 on the basis that that "***the skipping and/or repeating of frames for resynchronization is not 'an assignment rule for assigning each one of the content-related second data segments to one of the content-related first data segments,' as required by Claim 1.***" PO Resp. 34 (quoting Ex. 1002, 204). But rather than a disavowal or clarification of the negative timing limitation, this is merely an argument that Rosenau's skipping and repeating frames does not read on the assignment rule as claimed.

With respect to Shin, the patent applicant argued that "[s]egments of one type of data are not assigned to segments of the other type; rather a synchronization time is calculated." Ex. 1002, 269; *see also* PO Resp. 31 (quoting same). At best, this argument is simply an argument that assigning segments to one another according to the claimed assignment rule does not read on calculating a synchronization time. Like the arguments noted above,

this is not an argument that even mentions the negative timing limitation at issue here.

Therefore, the record shows that the patent applicant did not distinguish Shin and Rosenau based on the negative limitation at issue here. As the Board essentially found, the patent applicant presented different reasons as to why the prior art references asserted by the Examiner did not disclose the assignment rule. *See* '086 IPR, Paper 37, 15–18, 20–22. In any event, as Petitioner argues, the patent applicant did not disavow or somehow clarify an ambiguous meaning of the assignment rule to justify incorporating the negative limitation at issue here, "the assigning is not performed by adjusting the timing of the content-related data segments." *See* Reply 5–6 ("[R]egardless of whether the supposed disclaimer was of 'exact timing information' or of "adjusting the timing," as the patentee made no disavowal regarding 'adjusting the timing.'"). The record supports Petitioner. Patent Owner does not point to anywhere in the prosecution history where the patent applicant argued that the claims require that the "assigning is not performed by adjusting the timing of the content-related data segments."

The '794 patent's claimed process necessarily *results* in an adjustment of the timing of the outputted data segments by lining them up with one another. That is, different assignment rules in the '794 patent result in a different timing scheme. *See, e.g.*, Ex. 1001, 8:17–20 (claim 7 reciting "*determining*, based upon a content-related marker, *which content-related first data segments and content-related second data segments are to be output first in time*"); *compare* Ex. 1001, Fig. 1 (audio segments S2 output with every other video segment S1), *with id.* at Fig. 5 (audio segments S2

output with varying time spaces between video segments S1 that are different than those in Figure 1).

Petitioner correctly points out that Patent Owner seeks to narrow the same claims of the ’794 patent differently here than it did in the ’086 proceeding:

> For example, in the ’086 IPR, PO proposed that the “assignment rule” limitations mean “wherein the assignment is not performed by using exact timing information.” ’086 IPR, Paper 37, 19. PO’s construction now proposes “assignment rule” mean the “assigning is not performed by adjusting the timing of the content-related data segments.” POR, 26. This “new” construction simply substitutes the phrase “adjust the timing” in place of “exact timing information.”

Reply 5. It follows that the patent applicant did not clearly disavow (or clarify) the plain meaning of the assignment rule with the two different meanings Patent Owner proffers across the two IPRs (i.e., here and the ’086 IPR). Reading two different meanings from the same prosecution history record by the same entity at different times signifies the opposite of a clarified or disavowed meaning.

In summary, Patent Owner effectively seeks to amend the plain meaning of the assignment rule in claim 1 via its claim construction without a clear disclaimer or requisite clarification during prosecution and without a clear indication that the inventor intended to incorporate limitations from the specification. In any event, as Petitioner argues, “no construction is necessary, as Comps teaches an ‘assignment rule’ even under PO’s current proposed construction.” Reply 7.

4. *Effect of Prosecution History in Applying Comps*

Patent Owner contends that Comps’s SYNCH commands “adjust the timing of certain data segments by causing them to be processed at an earlier

or later time." PO Resp. 46. Therefore, according to Patent Owner, this eliminates Comps as prior art here because the '794 patent applicant distinguished allegedly similar prior art with respect to the assignment rule during the prosecution of the '794 patent. *See id.* at 43–47. As determined above, however, there is no proper basis to import the negative limitation into the assignment rule as there was no disavowal during prosecution.

Even if we were to incorporate the negative limitation, as Petitioner argues, and as discussed further below in connection with claims 20 and 21, "the SYNCH commands in Comps are designed 'to avoid the use of timestamps.'" Reply 21 (citing Ex. 1003 ¶¶ 89, 125). As Petitioner also points out, "Comps discloses that its SYNCH commands 'are not temporal commands.'" *Id.* (quoting Ex. 1004, 3:44–47). In addition, as indicated in the previous section, the '794 patent's different assignment rules result in certain data segments "be[ing] processed at an earlier or later time" (*see* PO Resp. 46), depending on the rule. *Compare* Ex. 1001, Fig. 1 (audio segments S2 output with every other video segment S1), *with id.* at Fig. 5 (audio segments S2 output with varying time spaces between video segments S1 that are different than those in Figure 1).

Patent Owner also argues that Comps and Rosenau are "indistinguishable . . . in every way that matters." Sur-reply 6. The record does not support these arguments. Patent Owner lists timestamps as an example that both Comps and Rosenau disclose. *See id.* Contrary to this argument, Comps does not describe assigning timestamps anywhere, let alone to instigate, or even during, the processing of its SYNCH commands. And as Patent Owner acknowledged during the Oral Hearing in the instant case, Rosenau's system uses timing information for synchronization, instead

of using SYNCH commands, which Comps uses. *See* Tr. 48:20–49:6, 46:20–47:16. Even if Comps implicitly employs timestamps somehow, as noted above, Patent Owner acknowledged that the ’794 patent also does, as indicated above. *Id.* at 41:5–22 (“[W]e’re talking about MPEG 2, MPEG 4, they have time stamps in the ’794 patent, I guess essentially any item of content is going to have time stamps, . . . that was the state of the art, there was time stamps everywhere and in everything . . . we’re outputting content synchronously, there’s got to be some kind of time connotation and again, that’s the novelty of the ’794 patent.”).

Petitioner also shows that Comps does not use timestamps or any timing information:

> Comps makes clear that its SYNCH commands “are not temporal commands . . . but are instead dependent on a specific event,” and they are not “present in the tracks at regular time intervals.” EX1004, 3:44–47. The function of the SYNCH commands is to dictate which commands are executed when the master and slave tracks fall out of sequence, which is accomplished by assigning the “content related . . . data segments” in tracks 2 and 3 to the “content-related . . . data segments” in track 1. *See id.*, 4:29–50. That is, the SYNCH commands do not operate by adjusting timing information.

Reply 12. This is a crucial distinction (in the event the negative limitation applies). Comps relies on a SYNCH *event*, *not timing*, to perform synchronization.

Comps also does not employ a clock to determine how far out of sync two streams are. *See* Ex. 1004, 3:44–47 (“The synchronization commands are not temporal commands, as in the prior art, *but are instead dependent on a specific event*. Thus *the fields SYNCHi are not present in the tracks at regular time intervals*.” (emphasis added)), Fig. 3. Accordingly, the ’794

patent applicant did not clearly disavow or clarify an assignment rule that precludes the method of Comps as a prior art method. As indicated above, although not arising to the level of a disclaimer by clearly distinguishing the claims, the ’794 patent applicant specifically argued during prosecution that Rosenau’s “synchronization is done by utilizing a system time clock,” and further, “[t]he synchronization is based on the timing information parsed from a data stream, which is loaded into a system time clock counter and incremented according to a predetermined clock frequency.” Ex. 1002, 203–204.

For the reasons noted above, the prosecution history does not preclude Comps as prior art even if we were to import the negative limitation urged by Patent Owner.

D. Overview of Comps (Ex. 1004)

Comps’s system relates to synchronizing data output from “at least two separate computer files (track1, track 2) called the first file, the second file, etc.” Ex. 1004, code (57). In Comps’s method, “*at least one synchronization command* is inserted in each file, characterized in that said synchronization command is inserted before each event-related command characterizing an important event.” *Id.* (emphasis added).

Comps describes the data as follows:

> Each track of the file 50 can contain a single type of data. For example, track 60 can be a MIDI (Musical Instrument Digital Interface) format track for sound, track 70 can contain a sequence of pictures, and track 80 can contain sequences of texts. The different tracks *may be intended to be scanned by microprocessors and presented simultaneously to a user*. The different microprocessors therefore scan the tracks at the same time.

Ex. 1004, 2:60–67 (emphasis added).

Figure 3 of Comps follows:

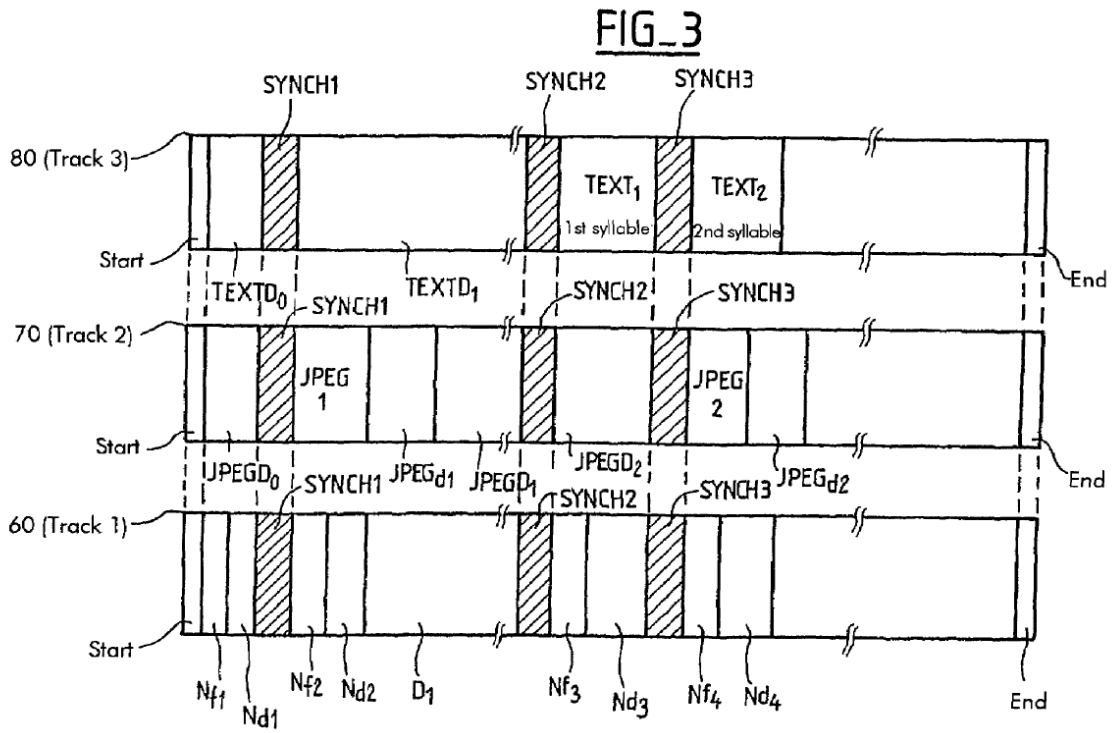

Figure 3 illustrates an embodiment of Comps's method. As noted above, "[t]he different tracks [i.e., Tracks 1–3] may be intended to be scanned by microprocessors and presented simultaneously to a user." Ex. 1004, 2:64–68. To ensure the processors do not lose synchronization, a master processor reads Track 1, and the SYNCH commands "force[] the other microprocessors in charge of the other tracks, referred to as slaves, to synchronize with it." *Id.* at 3:48–54.

After the start and playing of a first note Nf_1 for duration Nd_1 on Track 1, the SYNCH1 command signifies that second musical note field Nf_2 (for duration Nd_2) on Track 1 is output in synch with first image field JPEG1 (for duration $JPEGd_1$) on Track 2. Ex. 1004, 3:7–4:28, Fig. 3. The $TEXTD_1$ field on Track 3 represents a "waiting time[] between text." *Id.* at 3:41. Similarly, after a waiting period D_1 in Track 1, the SYNCH2 command

forces second musical note field Nf_3 (for duration Nd_3) on Track 1 to output in synch with text field $TEXTD_1$ on Track 3 and with waiting time between images $JPEGD_2$ in Track 2. *See id.* at 3:8–4:24.

In general, Comps describes its invention as follows:

> The data in a multimedia file according to the invention can comprise either time values or sound, text or picture coding values. The time values can represent a note duration, an image display time, a track start or end time, or a waiting time between two events. According to the invention, the tracks of the multimedia file also include synchronization commands related to the various events included in the track (note, picture, text, etc.).

Ex. 1004, 2:43–52.

Also, Comps contemplates data files with and "at least one-event related command," with "at least one synchronization command is inserted in each file, characterized in that said synchronization command is inserted before each event-related command characterizing an important event." *See* Ex. 1004, code (57).

E. Challenges over Comps

Petitioner asserts that Comps anticipates claims 1–5, 9–13, 15–17, 20, and 21. Pet. 3, 26–49.

1. Independent Claim 1

Alleging anticipation of independent claim 1, Petitioner draws the following correspondences between elements recited in claim 1 and Comps: (1) the recited "content-related first data segments" and musical note fields in Comps's Track 1; (2) the preamble's "first data file" and Comps's Track 1; (3) the recited "content-related second data segments" and Comps's video or text fields on Comps's Tracks 2 and 3, respectively; (4) the preamble's "second data file" and Comps's Track 2 (or Track 3); (5) the recited "device

for synchronizing content-related data" and Comps's computer system of multiple processors; and (6) the recited "assignment rule" and Comps's use of the SYNCH commands. Pet. 26–35.

Petitioner's annotated version of Comps's Figure 3 follows (Pet. 14):

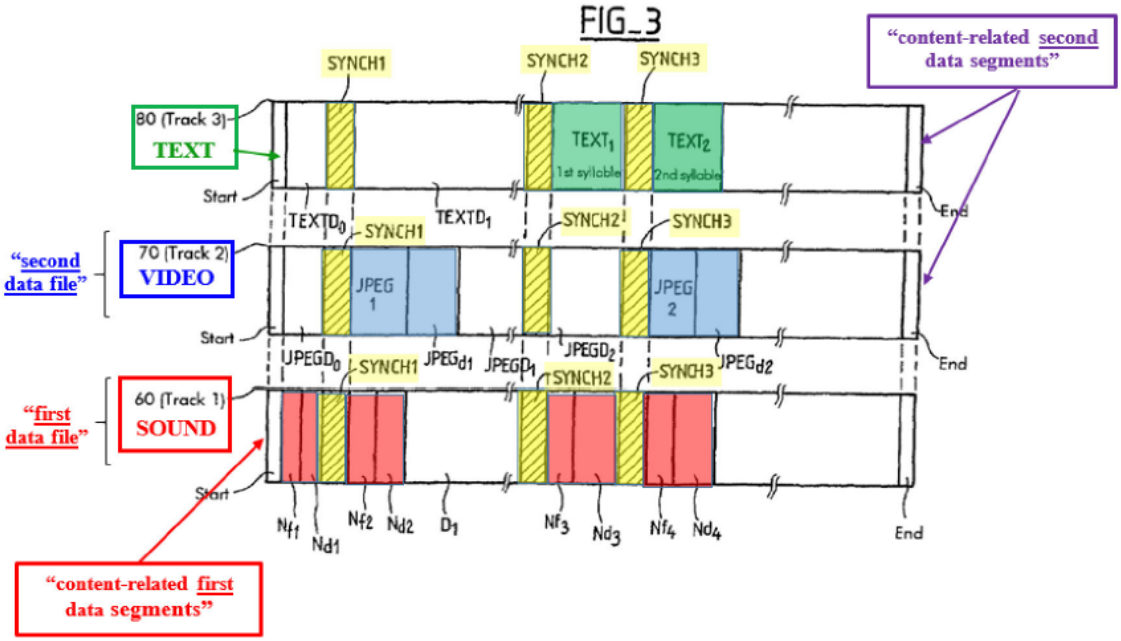

Comps's Figure 3 above as annotated by Petitioner illustrates how Petitioner reads the claimed first and second content related data segments onto an example of Comps's method. Pet. 14; *accord* Pet. 34 (similar annotation). As annotated by Petitioner, Figure 3 illustrates content-related first data segments Nf_2:Nd_2 (red) output in synch with content-related second data segments $JPEG_1$ (red). Annotated Figure 3 also illustrates content-related first data segments Nf_3:Nd_3 (blue) output in synch with content-related second data segments $TEXT_1$ (green). Similarly, annotated Figure 3 illustrates content-related first data segments Nf_4:Nd_4 (red) output in synch

with content-related second data segments $JPEG_2$ (blue) and $TEXT_2$ (green). *See id.* at 14, 34.[10]

Petitioner explains that "tracks 60, 70, and 80 in *Comps* have inserted SYNCH commands that control which content from each track is synchronized with content from the other tracks, so that they can be 'output together' or transmitted together simultaneously." Pet. 33. Petitioner contends that claim 1's "'assignment rule' which 'assign[s] each one of the content-related second data segments to one of the content-related first data segments' is the synchronization commands being executed by the microprocessors." *Id.* Petitioner explains that similar to the '794 patent's disclosed assignment rule, which synchronizes data segments S1 with data segments S2 (Ex. 1001, Fig. 1), "tracks 60, 70, and 80 in *Comps* have inserted SYNCH commands that control which content from each track is synchronized with content from the other tracks, so that they can be 'output together' or transmitted together simultaneously." *Id.* (citing Ex. 1001, 6:4–27).

Patent Owner disputes Petitioner's showing of anticipation "[b]ecause every embodiment and disclosure in Comps is about synchronizing *a* ***subset*** of the outputted events instead of ***each*** outputted event." PO Resp. 47 (citing Ex. 2011 ¶¶ 103–117) (emphasis added). Patent Owner contends that "Comps does not meet these claim limitations because ***there is no disclosure***

[10] Comps's Figure 3 employs a subscript for text fields (e.g., $TEXT_1$), but other portions of Comps do not (e.g., TEXT1). *Compare* Ex. 1004, Fig. 3, *with id.* at 3:39–40. For consistency, this Decision employs a subscript for the numeral in all of Comps's fields (except for SYNCH1, SYNCH2, etc.) even when quoting the parties' briefing.

in Comps in which 'each' of the outputted events in a track are assigned to an event in a second." *Id.* at 49–50.

Patent Owner observes that "Petitioner identifies $JPEG_1/JPEGd_1$ and $JPEG_2/JPEGd_2$ as the 'content-related second data segments' (or alternatively $TEXT_1$ and $TEXT_2$)." PO Resp. 47 (citing Pet. 27–28). According to Patent Owner, however, Petitioner does not identify "[t]he events $JPEGD_0$, $JPEGD_1$, and $JPEGD_2$ in Track 2 (or $TEXTD_0$ and $TEXTD_2$ in Track 3)" as content-related data segments, and they "are not output together with events in Track 1 on the basis of a SYNCH command." *See id.* at 47–48. Patent Owner is correct. However, this observation is not relevant to Petitioner's showing for claim 1, because claim 1 requires outputting *content-related* second data segments with content-related first data segments. As illustrated above in Petitioner's annotated version of Comps's Figure 3, Petitioner does not rely on "[t]he events $JPEGD_0$, $JPEGD_1$, and $JPEGD_2$ in Track 2 (or $TEXTD_0$ and $TEXTD_2$ in Track 3)," which represent waiting times, as content-related second data segments. *See* Ex. 1004, 3:36–41 (identifying "waiting times" between images and texts); Pet. 34 (identifying content-related first and second data segments by annotating Comps's Figure 3).

Patent Owner asserts that "Comps specifically discloses that SYNCH commands are only to be used for a subset of events, i.e., the 'important' events." PO Resp. 50 (citing Ex. 1004, 1:4–10, 1:41–2:23, 2:60–4:2, 4:18–50.).[11] Therefore, Patent Owner asserts that "Petitioner only alleges that a subset of the events in Tracks 2 and 3 are assigned to events in Track 1

[11] As discussed below, Patent Owner also argues that a user in Comps can designate any type of event as important. *See* PO Resp. 52.

because that is all that Comps discloses." *Id.* Again, Patent Owner's assertions, even if correct, fail to address or undermine Petitioner's anticipation showing. As illustrated above in Petitioner's annotated version of Comps's Figure 3, Petitioner identifies important events with SYNCH commands before them as content-related data segments corresponding to claim 1. *See* Reply 14 ("[T]he '794 claims do not require every event in Comps be outputted together on the basis of an 'assignment rule'; the claims only require '***each of the content-related second data segments*** is output together with an associated one of the ***content-related first data segments*** on the basis of an assignment rule.'").

Patent Owner also contends that "***none*** of the events in Comps are content-related data segments because they do not contain ***content*** *data*." PO Resp. 52–53; *accord* Sur-reply 22–23 (similar arguments). The record does not support this claim construction argument, because the claims recite "content-*related* . . . data segments," and the '794 patent specification does not limit "content-related" data segments to content only. *See supra* § II.C.1 (Claim Construction). Patent Owner agrees that "Comps'[s] events . . . *relat[e] to content*." Sur-reply 22 (emphasis added).

Even if we were to adopt Patent Owner's claim construction argument as correct, contrary to Patent Owner's arguments, Comps discloses embodiments wherein each track consists of only content, which includes data, as opposed to commands, as Petitioner shows. *See* Sur-reply 22–23 (arguing Comps discloses instructions instead of content); Reply 7–8 (citing Ex. 1004, 1:42–45, 2:10–14, 2:61–62, 3:23). For example, as Petitioner shows, Comps discloses that "track 70 can contain ***a sequence of pictures***, and track 80 can contain ***sequences of texts***." Reply 8 (emphases to

original) (quoting Ex. 1004, 3:11–19). And for track 60, "[*t*]*he* ***sound data could consist of sampled sounds*** (speech, miscellaneous noises such as applause or microphone noise, etc.)" *Id.* (emphasis to original) (quoting Ex. 1004, 2:60–64. Also "[t]rack 80 . . . contains only ***data corresponding to text messages***" and the "***data could equally be video data.***" *Id.* (emphasis to original) (quoting Ex. 1004, 3:11–19). And "[t]rack 60 . . . contains only ***MIDI sound data***." *Id.* (emphasis to original) (quoting Ex. 1001, 3:51).

Patent Owner's focus on instructions or commands in Comps does not undermine Petitioner's showing as to pictures, texts, and sound as the claimed "content-related . . . *data* segments." *See* PO Resp. 41–43 (focusing on Comps's MIDI and JPEG disclosures); Sur-reply 22–24 (same).

Also, as Petitioner shows, claim 1 reads on Comps's embodiment of two tracks—Track 1's content-related first data segments (Nf_3:Nd_3 and Nf_4:Nd_4) synchronized/output with all of Track 3's content-related second data segments, ($TEXT_1$ and $TEXT_2$). *See* Pet. 28 ("The sound segments in track 60 and the text segments in track 80 shown in *Comps*, Figure 3 could also correspond to 'content-related first data segments' and 'content-related second data segments' of claim 1, respectively."); Ex. 1004, 2:6–9 ("[T]he invention provides a method of synchronizing data in a multimedia document (50) comprising *at least two* separate data files (track1, track2) referred to as the first file, the second file, etc., in which method . . . ." (emphasis added)); Reply 18 (arguing that "in Comps'[s] Figure 3, 'content-related second data segments,' which can be $TEXT_{[1]}$ and $TEXT_{[2]}$, are sequentially outputted 'according to their chronological sequence' together with the third note in Track 1 (Nf_3:Nd_3) and the fourth note in Track 1 (Nf_4:Nd_4), respectively, which are the claimed 'content-related first data

segments.'"). Comps supports Petitioner and states that "two syllables represented by the fields $TEXT_{[1]}$ and $TEXT_{[2]}$ *must be presented to the user*." Ex. 1004, 3:39–40 (emphasis added). Accordingly, Petitioner persuasively maps each of these text fields to an "associated one of the content-related first data segments [Nf_3 and Nf_4, respectively] on the basis of an assignment rule [the SYNCH process]," as claim 1 requires.

Patent Owner does not undermine or specifically address Petitioner's showing that relies only on two tracks, Tracks 1 (notes) and 3 (text) of Comps's Figure 3.

Rather, Patent Owner contends that

> if waiting times [(e.g., (e.g., D1, $JPEGD_1$, $TEXTD_1$)] are not content-related data segments because they do not contain content data, then it necessarily follows that note durations [(e.g., Nd_3, Nd_4)] are also not content-related data segments because they also do not contain content data (or alternatively they must both be content-related data segments — the point is that there must be consistency in the analysis).

PO Resp. 53. According to Patent Owner, Petitioner "does not explain why two events ($JPEG_{[1]}/JPEG_{d1}$, $JPEG_2/JPEGd_{[2]}$, Nf_3/Nd_3, Nf_4/Nd_4) can constitute a single data segment." *Id.* at 52; *accord* Sur-reply 14–16 ("Comps'[s] grouping together of events to define a *note* is irrelevant to whether multiple events can be a single *data segment*."). Patent Owner also argues that "Petitioner does not view waiting time events (e.g., D_1, $JPEGD_1$, $TEXTD_1$) as content-related data segments." PO Resp. 52 (citing Pet. 14, 27–28, 36). Therefore, Patent Owner contends that "it is illogical to view certain sound and picture events (e.g., Nf_2, $JPEG_{[1]}$) and the events that describe the durations of those events (e.g., N_{d2} and $JPEG_{d1}$) as not being 'content-related . . . data segments' when considered separately, yet

simultaneously view their combination as a single content-related data segment." *Id.* Patent Owner contends that one plain meaning of a segment is "a portion cut off from a geometric figure by one or more points, lines, or planes." Sur-reply 16.

Patent Owner also argues that "[n]o specification embodiment combines data *segments* into a single *segment*." Sur-reply 13. Patent Owner also argues that "the Examiner distinguished references during prosecution for not assigning "each" content-related second data segment to a content-related first data segment." *Id.* (citing Ex. 1001, 4:9–6:42, Figs. 1–5, claims 1–22; Ex. 1002, 39–40, 203–205).

Patent Owner's arguments are unavailing. It is not clear how the '794 patent groups bytes of data into data segments. *See* Ex. 1001, 4:30–33 (noting a data file includes 2877 bytes without describing how the bytes relate to data segments). Patent Owner's citations to the '794 patent and prosecution history do not support its argument. On pages 39–40 of Exhibit 1002, for example, the Examiner simply underlines a portion of claim 1, which includes the assignment rule, in distinguishing a prior art reference to Yamane. On pages 203–205 of Exhibit 1002, the '794 patent applicant argues that the combined teachings of Rosenau and Yamane do not teach the assignment rule. Patent Owner's citations to over two columns in the '794 patent and to generic arguments in the prosecution history fail to support its data segments arguments.

Even if "two events" in Comps are separate and constitute two data segments, and the second "events that describe the durations of those events (e.g., Nd_2 and $JPEG_{d1}$)" are not "content-related . . . data segments" as Patent Owner implies, Petitioner's mapping still shows that Comps anticipates the

claims. *See, e.g.*, Pet. 34 (annotating Comps's Fig. 3). That is, if one assumes the time durations and/or waiting times in Comps's Figure 3 are not content-related data segments based on Patent Owner's arguments, Comps still anticipates. Claim 1 only requires synchronizing content-related data segments. Therefore, more specifically, Comps still anticipates under Petitioner's showing even if we were to agree with Patent Owner that time durations in Tracks 1 and 2 (e.g., Nd_2 and $JPEG_{d1}$) are not part of a content-related data segment, because, for example, Petitioner still shows that Comps syncs $TEXT_1$ and $TEXT_2$ with Nf_3 and Nf_4, respectively. *See* Ex. 1004, Fig. 3; Pet. 28 (annotating Ex. 1004, Fig. 3). Similarly, Petitioner still shows that Comps syncs $JPEG_1$ and $JPEG_2$ with Nf_2 and Nf_4, respectively. *See* Ex. 1004, Fig. 3; Pet. 28 (annotating Ex. 1004, Fig. 3).

Assuming one cannot ignore the image and note time durations because Petitioner identifies them as such (even though Patent Owner argues otherwise), Petitioner persuasively explains that two events ($JPEG_1/JPEGd_1$, $JPEG_2/JPEGd_2$, Nf_3/Nd_3, Nf_4/Nd_4) constitute a single data segment. *See* Reply 16–17 (citing Ex. 1004, 3:22–25). Moreover, the two events also satisfy Patent Owner's dictionary evidence of plain meaning, because the two events together constitute "a portion cut off from a geometric figure [such as Figure 3] by one or more points, lines, or planes." *See* Sur-reply 16 (citing Ex. 2041; 2042). The two events also meet another plain meaning offered by Patent Owner, "one of the parts into which something naturally separates or is divided; a division, portion, or section." *See* Ex. 2041, 1; Sur-reply 16 (citing Ex. 2041). As set forth by Petitioner (Reply 16–17), Comps's two events define a note or image and therefore represent a "naturally separate[d] . . . division, portion, or section" (Ex. 2041, 1).

Either way (i.e., whether one ignores the time durations or not), as found above, Petitioner relies on Comps's disclosure of using only two tracks, specifically Track 3 and Track 1. Ex. 1004, 2:6–16 ("at least two separate data files"), Fig. 3; Pet. 28; Reply 18 (citing Pet. 27–28). As depicted in Figure 3 and as explained above, Comps shows that all the data segments depicted in Track 3 ($TEXTD_1$, $TEXT_1$, and, $TEXT_2$) coincide via a SYNCH command with content-related first data segments Track 1 (Nf_2/Nd_2 Nf_3/Nd_3 Nf_4/Nd_4).

In other words, as Petitioner similarly argues:

> For example, in Comps' Figure 3, "content-related second data segments," which can be $TEXT_{[1]}$ and $TEXT_{[2]}$, are sequentially outputted "according to their chronological sequence" together with the third note in Track 1 (Nf_3:Nd_3) and the fourth note in Track 1 (Nf_4:Nd_4), respectively, which are the claimed "content-related first data segments."

Reply 18 (citing Pet. 27–28).

Patent Owner also appears to argue that Comps's "squiggly lines" in Figure 3 represent more data segments and prevent chronological output of the data segments:

> For instance, for Track 1, without accounting for event D_1 (and any other events indicated by the squiggly lines in the event), all the ensuing events will not be in their chronological order — they will be too early, and so out of alignment with the other tracks. (EX1004, Fig. 3.) This is similarly true for Tracks 2 and 3.

PO Resp. 56 (citing Ex. 1004, Fig. 3). That is, Patent Owner contends Comps's method of skipping data segments in a slave track (e.g., Figure 3's Track 2 or 3) when the slave track is out of sync with the master track (e.g., Figure 3's Track 1) results in slave track data segments (whether between the squiggly lines or not) not being output "according to their chronological

sequence" as claim 1 requires. *See id.* at 56–57; Ex. 1004, 4:30–36 (describing the skipping of unimportant commands to the next SYNCH command when a slave track gets SYNCH data from the master processor and "is lagging behind" the master track). Patent Owner similarly argues that Comps does not disclose sequentially outputting Comps's "events," "because fields such as D_1 in Track 1, $JPEGD_1$ and JPEGD2 in Track 2, and $TEXTD_1$ in Track 3 are output in between the alleged content-related data segments." PO Resp. 55 (citing Ex. 1004, 3:22–43, 3:57–4:2).

These arguments are unavailing. Even if Comps suggests additional data segments in Tracks 1, 2, and 3 between the "squiggly" lines in Figure 3, Comps does not disclose skipping *content-related* data segments in either the slave tracks or a master track, so that the content-related data segments are always output sequentially with respect to one another, as Petitioner argues. *See* Reply 18 (arguing waiting times are not "content-related" so they "do not prevent the 'content-related . . . data segments from being outputted 'sequentially' and in 'chronological sequence'"); 19–20 ("The SYNCH commands are placed in such a manner that important events [(content-related data segments)] will get executed. Only unimportant events may not have their commands executed if the slave track is lagging."). Comps supports Petitioner, stating that "different tracks are resynchronized *before any important command, if necessary*." Ex. 1004, 4:48–50 (emphasis added). And Comps states that "the important event corresponds to a command to display a text, a command to display a picture, or a command to reproduce a sound." *Id.* at 2:20–24.

As to the master track (Track 1), Patent Owner agrees that "Comps discloses executing the events in its master track *in a timewise order* (though

as described above, that is not necessarily true for the events in the slave tracks, as events may be skipped)." PO Resp. 56 (citing Ex. 1004, 2:43–64, Fig. 3) (emphasis added). So Comps's system never skips anything in master Track 1, because it resynchronizes only the slave tracks. *See* Ex. 1004, 3:47–51 ("In the FIG. 3 example, musical notes included in the track 1 data must not be interrupted. Synchronizing the three tracks must not entail interrupting the music heard by the user."); *id.* at 4:38–50 (describing "[t]wo situations" that cause re-synchronization is slave tracks).

With respect to both the slave and master tracks, as indicated above, Comps discloses that the preferred option is to synchronize each data segment that a user deems important, placing control of the designation in the user so that the user adds a SYNCH command for each data segment the user deems "necessary," with preference for data content, for example, a sound in SYNCH with text or pictures only. *See* Reply 19–20 (arguing all "important events will get executed" because Comps discloses that "different tracks are resynchronized before any important command, if necessary" (quoting Ex. 1004, 4:45–50)); Ex. 1004, 2:20–24 ("The method is advantageously characterized in that the important event corresponds to a command to display a text, a command to display a picture, or a command to reproduce a sound."), 4:44–50 ("[E]ach important command . . . must not be interrupted, [as it] is represented by a given field preceded by a . . . synchronization command. . . . [which] is at the same place in all the other tracks. . . . [such that] different tracks are resynchronized before any important command, if necessary.").

As Petitioner also argues, and as indicated above, "[n]othing in Comps suggests that the 'squiggly lines' in the respective delay periods in

tracks 1, 2, and 3 are an indication that there are important events before SYNCH2 other than Nf_2:Nd_2 and JPEG1." Reply 20. That is, "[i]f there were additional important events, such as multiple notes after the second note before SYNCH2, *then the next note after SYNCH2 would not be the third note*." *Id.* (citing Ex. 1004, Fig. 3, 3:57–4A:2) (emphasis added).

In other words, Petitioner shows that claim 1 reads on Comps's disclosure because Comps generally teaches as part of its invention always outputting all content-related second data segments (important events) in synchronization with all content-related first data segments, which results in "sequentially outputting . . . the content-related first data segments and the content-related second data segments according to their chronological sequence . . . on the basis of an assignment rule" as claimed. *See Hewlett–Packard Co. v. Mustek Sys., Inc.*, 340 F.3d 1314, 1326 (Fed. Cir. 2003) (explaining that "a prior art product that sometimes, but not always, embodies a claimed method nonetheless teaches that aspect of the invention" even if "merely changing one setting on the [prior art] device causes it to behave in a [different] manner" so that it does not anticipate); *Bell Commc'ns Research, Inc. v. Vitalink Commc'ns Corp.*, 55 F.3d 615, 622–23 (Fed. Cir. 1995) ("[A]n accused product that sometimes, but not always, embodies a claimed method nonetheless infringes."); *cf. Apple, Inc. v. Samsung Elecs. Co.*, No. 11-CV-01846-LHK, 2011 WL 7036077 (N.D. Cal. Dec. 2, 2011), *aff'd in part, vacated in part, remanded*, 678 F.3d 1314 (Fed. Cir. 2012) (characterizing *Hewlett-Packard*, 340 F.3d at 1326 as "holding that a prior art scanner still embodies a limitation of a method patent *even if changing a setting causes the scanner to fail to perform the limitation*" (emphasis added)).

More specifically, by analogy to the facts in *Hewlett-Packard* (as characterized by the District Court in *Apple*) wherein the user could select an option such that the prior art either did or did not anticipate the claim, the user in Comps has the (preferred) option of always synching important events together with SYNCH commands so that Comps always performs the claimed method. *See Hewlett-Packard*, 340 F.3d at 1326. In addition, as discussed above, Comps discloses an embodiment that consists of a small number of data segments and SYNCH commands ("at least one") in each file (that is, embodiments without the squiggly lines of Figure 3). Ex. 1004, code (57); *accord* Tr. 38:23–26 (not disputing that Comps discloses an embodiment with a data file of only three notes and one SYNCH command), 66:7–9 (agreeing that Comps contemplates "a small number of segments, but not with sync commands before all of them"); Ex. 1004, 4:63–68 (claim 1 reciting a "*plurality* of fields" for "storing data of a first type in the first data file and data of a second type in the second data file," with "*at least one* event-related command").[12] Patent Owner agrees that Comps "discloses that

[12] As we noted in the Institution Decision,

> an artisan of ordinary skill would "at once envisage" all of Comps's (content-related) TEXT commands in Track 3 (e.g., $TEXT_1$, $TEXT_2$) and all of its waiting times (e.g., $TEXTD_1$), of a contemplated text file, will *each* follow a SYNCH command (as the three examples do in Figure 3) and are the only types of commands or data segments contemplated throughout Track 3. Thus, a skilled artisan would "at once envisage" an example of a data file with two content-related second data segments $TEXT_1$, $TEXT_2$, where "each of the content-related second data segments is output together with an associated one of the content-related first data segments" Nf_3, Nf_4 as claimed. Further, even were we to consider $TEXTD_1$ as content-related, it is output together with associated first data segment Nf_2.

'at least one' SYNCH command can be used." Sur-reply 13 (citing Ex. 1004, code (57), 1:41–2:34).[13]

Patent Owner argues that "while Comps does distinguish between important and unimportant events, *any type of event can fall into either category*." PO Resp. 52 (emphasis added). Even if Patent Owner's characterization is correct, it shows that Comps discloses the claimed invention for another reason—a user can ensure *all events* in Track 2 and/or Track 3 are important events synched together with all important events in Track 1. Nevertheless, per Petitioner's showing, Comps at least discloses a preference for important commands to consist of data content only (i.e., not waiting times). Ex. 1004, 2:20–23. Patent Owner agrees that Comps discloses that "important event[s] correspond[] to a command to display a

---

See Inst. Dec. 23 n.12 (citing *Kennametal, Inc. v. Ingersoll Cutting Tool Co.*, 780 F.3d 1376, 1381 (Fed. Cir. 2015) ("[A] reference can anticipate a claim even if it 'd[oes] not expressly spell out' all the limitations arranged or combined as in the claim, if a person of skill in the art, reading the reference, would 'at once envisage' the claimed arrangement or combination." (alteration in original) (quoting *In re Petering,* 301 F.2d 676, 681 (1962))); *see id.* at 1382 (A "person of skill in the art reading Grab would immediately envisage examples using one metal as a binder and one type of coating.")).

[13] Although Patent Owner also argues that Comps "cautions against using SYNCH commands frequently," Patent Owner also notes that the object of Comps is "to reduce the size of multimedia files, to optimize the quantity of data exchanged, and to provide optimum synchronization." *Id.* at 13–14 (quoting Ex. 1004, 2:3–5). Contrary to Patent Owner's characterization of cautioning against SYNCH commands, Comps describes using SYNCH "if necessary" to achieve this goal without describing any limit to the number of SYNCH commands. *See* Ex. 1004, 4:44–50; Tr. 69:4–23 (disputing Patent Owner's characterization and arguing that Comps describes "a lot of synchronization data" in the prior art as a problem, which Comps's system solves by inputting a SYNCH command for every important event).

text, a command to display a picture, or a command to reproduce a sound" (Sur-reply 16 (quoting Ex. 1004, 2:20–23)), and argues that these commands are "a *preferred* way to use important events," instead of "a *requirement* for how they must be used" (*id.*). Nevertheless, even if Comps only discloses a preference for synching all of the content-related data segments such as text, image, and notes, this preference is a specific feature in Comps that applies to all its embodiments, which Petitioner persuasively relies upon to show anticipation, contrary to Patent Owner's position that Comps must disclose a requirement for synchronizing these important content-related data segments to anticipate. *See id.* at 16–17; Ex. 1004, 4:44–47 ("Thus *each important command*, *i.e. a command whose execution must not be interrupted*, is represented by a given field preceded by a field representing a synchronization command." (emphasis added)). Patent Owner also agrees that "[t]he user [in Comps] absolutely determines what is important," and this includes time durations such as "JPEP D2" and "D1." Tr. 64:16–17.

Although Petitioner disagrees that Comps's user can specify any type of data segment as important, it is not necessary to resolve this factual issue where Comps discloses at least a preference that important data segments include only content data such as text, sound, or pictures. *See* Reply 14–15 (arguing that in Comps, "[a]n 'important event corresponds to a command to display a text, a command to display a picture, or a command to reproduce a sound'" (quoting Ex. 1004, 2:20–24). A person of ordinary skill in the art reading Comps's disclosure that "different tracks are resynchronized before any important command" (Ex. 1004, 4:48–49) would "at once envisage" synching each of the content-related second data segments as important events. *See Kennametal,* 780 F.3d at 1383 (quoted *supra* note 12).

Therefore, because of Comps's disclosure to provide a SYNCH command for all important commands (content-related data segments), Patent Owner's arguments that Comps's system may skip unimportant data segments when Tracks 2 or 3 are out of synchronization with Track 1 are unavailing. *See* PO Resp. 56 ("More broadly, Comps'[s] SYNCH commands may lead to entire events in the slave tracks being skipped. . . . Thus, by design, Comps does not meet the limitation of 'sequentially' outputting 'each' alleged data segment in the tracks."). As explained above, Comp's system does not skip any data segments when the user exercises the option provided in every embodiment to place a SYNCH command before every data segment the user deems important, i.e., "if necessary." Ex. 1004, 4:48–50.

In general, Comps states that its data is in a sequence or is part of a sound, picture, or text track: "[T]rack 60 can be a MIDI (Musical Instrument Digital Interface) format track for sound, track 70 can contain a sequence of pictures, and track 80 can contain sequences of texts." Ex. 1004, 2:61–64. Comps also generally states that a "user . . . sees text and pictures whilst hearing sounds." *Id.* at 1:24–25. Comps also describes a "problem" as "match[ing] the text to the music and the pictures, i.e. to synchronize the different types of data contained in the same multimedia file." *Id.* at 1:26–28. Comps states that "[t]he present invention relates to a method of synchronizing different types of data in a multimedia file." *Id.* at 1:4–5. Therefore, Comps tracks the '794 patent and at least implies that music, pictures, and text on selected tracks have a syntactical meaning within each data track and file that Comps's system synchronizes together to form a coherent output for a user.

Patent Owner does not argue that Comps fails to disclose synchronizing syntactical data of one track/file to that in another track/file in its briefing or otherwise. *See* Tr. 60:17–18 (contending that "syntactically related" is "not an issue that's been debated"); *id.* at 61:1–2 ("I don't understand that issue to be in dispute in this proceeding, so I'm not sure that determination needs to really be made here in this proceeding."; *id.* at 61:16–18 ("Well it also has to have a syntactical meaning with respect to data files [in Comps], but I don't think anyone disputes that it does . . . ."). Rather, as outlined above, Patent Owner argues that "every embodiment and disclosure in Comps is about synchronizing a ***subset*** of the outputted events instead of ***each*** outputted event," and therefore, "the Petition fails to establish the invalidity of any claims." PO Resp. 47 (citing Ex. 2011 ¶¶ 103 –117).

Patent Owner similarly argues as follows:

> Petitioner alleges that events Nf_1/Nd_1, Nf_2/Nd_2, Nf_3/Nd_3, and Nf4/Nd4 are "content-related first data segments" and $JPEG_1/JPEGd_1$ and $JPEG_2/JPEGd_2$ in Track 2 and $TEXT_1$ and TEXT2 in Track 3, are "content-related second data segments." (Pet., 13–14, 27–28, 36.) However, these events are not output sequentially because [waiting time] fields such as D_1 in Track 1, $JPEGD_1$ and $JPEGD_2$ in Track 2, and $TEXTD_1$ in Track 3 are output in between the alleged content-related data segments.

PO Resp. 55 (citing Ex. 1004, 3:22–43, 3:57–4:2). Similar to its other arguments, this argument assumes that waiting time fields, "D_1 in Track 1, $JPEGD_1$ and JPEGD2 in Track 2 and $TEXTD_1$ in Track 3" are "content-related data segments." *See id.* at 48 (arguing that "Petitioner does not explain why it cherry picks certain outputted events in each track and ignores others."). Petitioner shows that they are not, as discussed above and further below.

Alternatively, even if a user of Comps's system deems these waiting time fields as important, as explained above, the parties agree that Comps allows the user the option of placing a SYNCH command before any important data segments. *See* Reply 19 ("The SYNCH commands are placed in such a manner that important events will get executed."); PO Resp. 50 ("Comps specifically discloses that SYNCH commands are only to be used for a subset of events, i.e., the 'important' events." (citing Ex. 1004, 1:4–10, 1:41–2:23, 2:60–4:2, 4:18–50)), 52 ("And while Comps does distinguish between important and unimportant events, any type of event can fall into either category."); Tr. 64:16–17 (Patent Owner stating that "[t]he user [in Comps] absolutely determines what is important").

Assuming a user in Comps does not place a SYNCH command before waiting time data segments, Petitioner explains persuasively why time duration data segments such as D_1 in Track 1, and $JPEGD_1$ and $JPEGD_2$ in Track 2, and Text D_1 in Track 3, for example, are not "content-related data segments." *See* Reply 18 ("Comps'[s] waiting times in each track (e.g. D_1, $JPEGD_1$, $TEXTD_1$) are not 'content-related . . . data segments,' and therefore they do not need to be output 'sequentially' and in 'chronological sequence' based on the 'assignment rule.'"). Petitioner explains that these waiting times are not "important" events in Comps so that they are not "content-related." *See* Pet. 34 (annotating Fig. 3); Reply 14–15 (arguing waiting times are unimportant events). Petitioner explains that "silence ***within content***" is distinct from "waiting time between successive notes, images, and text," because the latter "are categorically not part of the content." *Id.* at 15–16. As Petitioner argues and as found below, distinguishing between waiting times between notes, text, or images, and note (or image) durations,

with the latter "content-related" and the former not "content-related," is consistent with the '794 patent specification.

As Petitioner explains with respect to note durations, "Comps makes clear that ***both*** the frequency and duration fields, *i.e.*, Nf_2 and Nd_2, 'define' a note." Reply 16 (citing Ex. 1004, 3:22–24, 3:24–25 ("[F]ields N[f]$_2$ and Nd_2 ***define*** a second note."), 3:27–28; Ex. 1024, 85:13–17 (Dr. Goodrich, testifying that he "agree[s]" that Nf_2 and Nd_2 "define a second note"). In other words, "considering Nf_2 and Nd_2 as separate, independent events, as [Patent Owner] suggests, would run afoul of Comps'[s] disclosure that requires both components to define a note." *Id.* at 17. Similarly, "the Petition never analyzes or considers . . . $JPEG_{[1]}$ and $JPEGd_1$ as separate events, because they are not independent events." *Id.*

Petitioner's showing comports with our claim construction. A note's duration in Comps is content-related segment data in that it specifies how long to play the note within that same data segment and represents a time period for which that note (content) continues in that segment. Similar reasoning applies to image time durations such as $JPEGd_1$.

Also, Petitioner explains that "Comps'[s] text fields ($TEXT_{[1]}$ and $TEXT_{[2]}$) do not have duration information for displaying text syllables, so 'each' text field, which is the claimed 'content-related second data segments' is 'output together with an associated' sound segment, *i.e.*, the claimed 'content-related first data segments,' and PO does not dispute this." Reply 17. As indicated above, claim 1 reads on only two tracks in Comps, text slave track 3 and image master track 1.

As Petitioner also explains, "Petitioner's mapping is consistent with the '794 patent and Comps." Reply 16. Patent Owner's arguments that

waiting times are content-related by referring to musical analogies does not rely on the '794 patent specification to support its argument that a waiting time *between data segments* is content-related. *See* Sur-reply 16–19.[14]

Turning to the '794 patent specification, it does not specifically address if a time duration of data segments or waiting times between data segments are "content-related." Patent Owner argues in general with respect to the timing related to the '794 patent's data segments and Figure 1 as follows: "That there are 10 video segments and only 5 audio segments *could indicate* that the audio segments are *twice as long timewise* as the video segments *or* that *the total duration of every set of 2 video segments is the same as the duration* of each consecutive audio segment." PO Resp. 5 (emphases added). But "[*t*]*he precise duration of any individual data segment*, and *the absolute point in time at which any given data segment is output*, *need not be known for the synchronization techniques of the '794 patent to operate*." *Id.* (emphasis added). In essence, Patent Owner argues that the '794 patent specification is agnostic as to the waiting times between data segments (because audio segments may or may not be as long as video segments and the time of output of each is not specified. *See* Ex. 1001, Fig. 1). Patent Owner also essentially argues that the disclosed method somehow accounts for time durations within or at the end of a data segment and also the waiting times between data segments. *See id.*

---

[14] As indicated above, Patent Owner also argues that nothing in Comps is content-related. *Compare* Tr. 54:11–12 (arguing "we don't think anything in Comps is a content-related data segment"), *with* 54:17–18 (arguing "none of it is [content-related in Comps], but if any of it is, then all of it has to be").

Corresponding to the waiting times between data segments that Patent Owner tangentially references (*see* PO Resp. 5), Figures 1 and 5 of the '794 patent reveal spaces or gaps between each of the video data segments 0–9 of S1 and between each of the audio data segments 0–4 of S2. As Patent Owner's arguments indicate, the '794 patent simply does not explain how much time elapses between, for example, audio data segments 1 and 0 in S2. *See* Ex. 1001, Fig. 1, 4:1–8; PO Resp. 5. As noted above, Patent Owner argues that Figure 1 "could indicate" that the audio data segments have no waiting time between them (because "the audio segments are twice as long timewise as the video segments"), but Patent Owner does not say, nor does the '794 patent. *See* PO Resp. 5. Asked during the Oral Hearing how the '794 patent determines the time spaces between video segments, Patent Owner stated that "[t]he claims don't speak to that, so I think there's a number of ways you could do that, because that doesn't implicate what the assignment rule must be or must not be, so I think that's left to the implementer to decide on their own." *See* Tr. 78:8–11.

The '794 patent appears to describe assigning a group of successive bytes of data (based on byte addresses) to a data segment or a group of data segments, but it is unclear as to how it creates data segments. *See* Ex. 1001, 4:30–33 ("Thus, for example, the line identified by a reference symbol X1 shows that an intracoded video object plane (I-VOP) begins at a byte address 26 within the first data file D1 and comprises 2877 bytes."), Fig. 2 (computer language for same at X1). Thereafter, the program appears to assign varying numbers of bytes to other data segments, but it is not clear if the various number of bytes correspond to data segments. *See id.* at Fig. 2

(assigning lengths 64, 17, 16).[15] More importantly, the '794 patent also does not indicate how these bytes or groups of bytes include time durations or waiting times. *See id.* at 4:23–41.

In any event, Patent Owner's arguments and the '794 patent specification indicate that the '794 patent is largely agnostic as to waiting times *between* data segments. It follows that the '794 patent does not describe waiting times *between* content-related data segments as "content-related." By referring to and defining "content-related . . . data segments" in the '794 patent specification without referring to the waiting times *between* the segments as content-related implies that the waiting times between segments are not "content-related."

This comports with our claim construction, because the '794 patent does not describe time durations (silence) *between* data segments as "segments of content or data related to content that have a syntactical meaning within the respective data file." *See supra* § II.C.1. As Petitioner argues, "Comps'[s] waiting times do not contain content or information about content" in that particular segment. *See* Reply 16. Stated differently, each waiting time segment in Comps represents silence and therefore is not content or data related to content *within that time duration segment.* *See* Ex. 2012, 40:12–16 (Dr. Bederson testifying waiting time in Comps are not content because "[i]t is waiting time in order to present content"). Based on the discussion above, this is in contrast to Comps's note and image durations (e.g., Nd_2, $JPEGd_1$,), which refer to content within that particular segment to

[15] As indicated above, this further suggests that Patent Owner's argument that a data segment is only one element lacks support.

help define a note or image therein by defining the content duration (e.g., Nf_2/Nd_2, $JPEG_1/JPEGd_1$).

Patent Owner cites to this deposition testimony by Dr. Bederson and argues that "waiting time events in Comps . . . present silence" and that the "parties' experts thus agree that silence in audio content—i.e., waiting times in Comps—are content-related data segments." Sur-reply 18 (citing Ex. 2012, 39:16–44:11). However, Dr. Bederson testifies that waiting times in Comps represent times *between content*—as opposed to content within the waiting time segment. *See* Ex. 2012, 40:12–16. And importantly, the cited deposition testimony does not reveal a basis in the '794 patent that describes waiting times between data segments as "content-related."

In contrast to note or image durations in Comps, $TEXT_1$ and $TEXT_2$ data segments define the length of sound heard (i.e., collectively, "two syllables," with a first syllable represented by $TEXT_1$ followed by a second syllable represented by $TEXT_2$). *See* Ex. 1004, 3:38–40. The '794 patent similarly gives an example of a data segment containing "Good" followed by another data segment containing "Morning," which may be "individual spoken words in an audio sequence" and "which have a content-related meaning for the first data file." *See* Ex. 1001, 4:49–60. Although there is necessarily a time duration for how long a speaker takes to say the words "Good" and "Morning" depending on the recorded speaker, the '794 patent does not explicitly mention it. Nevertheless, the inherent time duration of the sound (audible text) is part and parcel of the data segment in the '794 patent. *See* PO Resp. 5 (arguing that there is no "need" to "know[]" "[t]he precise *time duration of any individual data segment*" (emphasis added)).

This is similar to how Petitioner and Comps treat the duration of notes or duration of video segments in Comps, although Comps explicitly accounts for the time durations. For example, in Comps, Nf_1/Nd_1, Nf_2/Nd_2, Nf_3/Nd_3, and Nf_4/Nd_4 are "content-related first data segments" because the note durations Nd_1, Nd_2, Nd_3, and Nd_4 remain with their respective notes Nf_1, Nf_2, Nf_3, and Nf_4, just like any audio durations in the '794 patent remain with their respective data segments. Similarly, Comps's video duration $JPEGd_1$ remains with its video image $JPEG_1$ as one data segment, $JPEG_1/JPEGd_1$, and video duration $JPEGd_2$ remains with video image $JPEG_2$ as one data segment, $JPEG_2/JPEGd_2$. And as noted, $TEXT_1$ and $TEXT_2$ are "content-related second data segments" like the example audio of "Good" and "Morning" in the '794 patent. That is, the '794 patent implies that note, text, and image content time durations are part and parcel of content-related data segments, and Petitioner shows that Comps treats these in the same manner. Accordingly, the record supports Petitioner's reading of content-related data segments in Comps.[16]

Patent Owner's arguments that Comps's SYNCH commands result in a timing shift and therefore fail to read on the assignment rule are unavailing. *See* Sur-reply 2–7. As construed above, claim 1 does not incorporate the negative timing limitation urged by Patent Owner. *See supra*

---

[16] The Concurrence appears to read the Majority as distinguishing between duration times and waiting times in Comps based on what "syntactically-related" means and whether one or the other times is important. However, the Majority distinguishes between duration times and waiting times on the basis of what is consistent with the specification's description of "content-related" apart from any distinction between importance or syntactical relationship. And as noted above, the parties do not contest whether any data segment in Comps is syntactically related.

§ II.C.3–4. Even if it does, claim 1 still reads on Comps, because Comps's SYNCH commands operate in a similar fashion as the disclosed assignment rule, wherein both result in synchronizing different tracks of data segments (ultimately, at the end of the process of outputting the data segments together, by shifting the relative timing between the segments in each track). Comps's system does so without using any timing information as part of the assignment rule to instigate or cause the shift. *See supra* § 1.A, II.C.3–4, II.D; *infra* § E.6 (analyzing claims 20 and 21, which recite a negative timing limitation—"wherein the assignment rule is not based on a timestamp"); Ex. 1003 ¶ 89 (testifying that the SYNCH commands in Comps "are not temporal commands . . . but are instead dependent on a specific event" and "avoid the use of timestamps" (first quote quoting Ex. 1004, 44–47; citing Ex. 1004, 2:20–23; 3:49–52, 4:22–28), 125 (similar); Reply 20 (citing Ex. 1003 ¶¶ 89, 125)).

Patent Owner's argument that Petitioner relies on an improper new theory in its Reply relative to how Comps's SYNCH commands function is also unavailing. *See* Sur-reply 8. The Reply simply responds to the Response's new claim construction theory and arguments that rely on importing a negative timing limitation into the assignment rule in an attempt to distinguish the claims over Comps. *See* Reply 11–14.

Patent Owner also argues that Petitioner's reliance "on the SYNCH commands in isolation" precludes the assignment rule from reading on the SYNCH commands. *See* Sur-reply 9 (arguing that "without the additional acts, important events will not be output together synchronously, and thus are not 'assigned' to one another"). According to Patent Owner, "[i]f the acts that speed up or slow down subsequent events are not included, SYNCH

commands do not 'assign[] each one of the content-related second data segments to one of the content-related first data segments,' as required by the claims." *Id.* This line of argument is unavailing even under Patent Owner's claim construction, which requires incorporating the negative time limitation into the claims. That is, processing the SYNCH commands (assignment rule) instigates the *alignment* of specific and respective content-related data segments in at least two tracks based on the SYNCH *event*, and then, outputting the segments together sequentially and chronologically is the result of that alignment. The claim phrase "an assignment rule for assigning" requires no more.

In summary, Petitioner shows that claim 1 reads on Comps's disclosure of assigning SYNCH commands to all content-related data segments even if there are more content-related data segments between the squiggly lines in Comps's Figure 3. In addition, Petitioner persuasively reads the claimed content-related second data segments separately onto Comps's teachings of an embodiment with a limited (small) number of SYNCH commands and content-related data segments. And finally, Petitioner persuasively reads claim 1 on the two track embodiment disclosed in Comps, wherein the slave track includes only text (e.g., $TEXT_1$ and $TEXT_2$).

Based on the foregoing discussion and after considering the full record, we determine that Petitioner shows by a preponderance of evidence that Comps anticipates claim 1.

2. Independent Claim 9

Independent device claim 9 is similar to independent method claim 1. Petitioner's analysis of independent claim 9 relies on its analysis of

independent claim 1, adapted to account for claim 9's recitation of a "device" rather than a "method." *See* Pet. 42–43.

Patent Owner presents a separate argument for claim 9 in a footnote. PO Resp. 54–55 n.5. In the footnote, Patent Owner argues as follows:

> Petitioner also does not show how "***each*** one of the content-related second data segments" is assigned to "***each*** one of the content-related first data segments." (EX1001, claim 9.) Specifically, Petitioner identifies Track 1 as containing the "content-related first data segments," but does not contend that any alleged content related second data segments (from Tracks 2 or 3) are assigned to the events Nf_1 and Nd_1 in Track 1. This is a clear failure of proof in the Petition.

PO Resp. 54–55 n.5. Prior to this footnote, which is in the middle of the section directed to claims 1, 9, and 22, Patent Owner treats claims 1, 9, and 22 together, indicating that the phrase at issue for each of these claims is the same for purposes of this trial. *See id.* at 47 (arguing that "*every* petitioned claim requires assigning ***each*** outputted content-related data segment in a first data file *with content-related data segments of a second data file*") (emphasis added) (citing "[Ex.] 1001, claims 1, 9, 22"), 49 (grouping claims 1, 9, and 22 together for one argument). Similarly, in its claim construction section, Patent Owner treats the relevant phrases of claims 1 and 9 exactly the same, proposing the assignment rule for both as including the phrase "assignment rule for assigning each one of the content-related second data segments *to one of the content-related first data segments*." *Id.* at 26 (emphasis added); *accord* Sur-reply 2 (construing the assignment rule for "claim 1, and similar[ly] for claims 9 and 22" as "assignment rule for assigning each one of the content-related second data segments to *one of the content-related first data segments*" (emphasis added)).

Assuming Patent Owner did not waive or forfeit the footnote argument under these circumstances, claim 9 recites "an assignment rule for assigning each one of the content-related second data segments to each one of the content-related first data *segment*." *See SmithKline Beecham Corp. v. Apotex Corp.*, 439 F.3d 1312, 1320 (Fed. Cir. 2006) ("arguments raised in footnotes are not preserved") (citing cases). Contrary to Patent Owner's argument, it does not recite "an assignment rule for assigning each one of the content-related second data segments to each one of the content-related first data *segments*." There is no antecedent basis in claim 9 for "each one of the content-related first data *segment.*" The phrase "each one of the content-related first data *segment*" is singular and implies there is only one content-related first data segment to satisfy under the assignment rule. Accordingly, Patent Owner's argument that relies on interpreting the phrase as requiring a synchronization to all of the content-related first segments in Track 1 of Comps, including Nf_1 and Nd_1 the start, is unavailing.

Alternatively, even if, as Patent Owner argues in the footnote, "each" refers to "every" content-related data segment in relation to the first and second content-related data segments, Patent Owner does not dispute that Comps contemplates a small number of data segments in each track and one or two SYNCH commands. *See* Ex. 1004, code (57) ("at least one"); Tr. 38:23–26 (not disputing that Comps discloses an embodiment with a data file of only three notes and one SYNCH command), 66:7–8 (agreeing that Comps contemplates "a small number of segments, but not with sync commands before all of them"); Ex. 1004, 4:63–68 (claim 1 reciting a "*plurality* of fields" for "storing data of a first type in the first data file and data of a second type in the second data file," with "*at least one* event-

related command"); Inst. Dec. 23 n.12 (preliminarily finding that claim 1 reads on a small number of data segments and SYNCH commands in Comps). Petitioner also notes that "Comps is definitive; 'each important command' is 'a command whose execution must not be interrupted.'" Reply 19 (quoting Ex. 100 4:44–50).

In its general description of the invention, Comps does not mention a start command. *See* Ex. 1004, code (57), 2:6–37 (describing the "invention" as a method wherein "at least one synchronization command is inserted into each file, which method is characterized in that said synchronization command is inserted before each event-related command characterizing an important event"). Describing Comps, the Petition cites to overlapping portions of column 2. *See* Pet. 12–13. In other words, Petitioner generally relies on Comps's SYNCH commands and shows that Comps contemplates putting a SYNCH command before all notes, so that Petitioner shows that Comps contemplates not including a note at the start position or starting the process at a SYNCH command. For example, addressing similar claim 1 (and relying on that showing to address claim 9), the Petition generally states that Comps discloses that

> each track may contain a different type of content such as *e.g.*, track 60 can be data relating to sound such as sequence of musical notes or a Musical Instrument Digital Interface ('MIDI') format track for sound, track 70 can contain a sequence of pictures (or video data), and track 80 can contain sequences of texts.

Pet. 27 (citing Ex. 1001, 2:54–64, 3:8–19, 3:48–49, Fig. 2). The Petition also explains that Comps employs SYNCH commands to ensure that "musical notes included in the track 1 data must not be interrupted," and "[s]ynchronizing the three tracks must not entail interrupting the music

heard by the user." *Id.* at 31 (quoting Ex. 1001, 3:48–51). Petitioner also explains that in Comps, "microprocessors sequentially execute synchronization commands (*i.e.*, $SYNCH_1$, $SYNCH_2$, $SYNCH_3$) to 'output together' the picture segments and/or text segments stored in tracks 70 and 80 (the 'content-related second data segments') with the 'associated' sound segments in track 60 (the 'content-related first data segments')." *Id.* at 32.

This generic reliance in the Petition does not rely on a note at the start position, even if the example of Comps's Figure 3 depicts one. Therefore, and for reasons similar to those explained in connection with claim 1, Petitioner shows that Comps contemplates embodiments for which each content-related data segment has a SYNCH command before it such that a note does not begin at the start position. Furthermore, claim 9 is a device claim. Not all sound tracks contemplated by Comps require a note at the start position in the master track. And as found above in connection with claim 1, Comps's system is configured to, or at the least, reasonably capable of, providing a SYNCH command for every content-related first and second data segment, which inherently includes, or implies, a SYNCH command at the start position, "if necessary."[17] *See* Ex. 1004, 4:48–50 ("[D]ifferent tracks are resynchronized before any important command, if necessary."); *In re Schreiber*, 128 F.3d 1473, 1478 (Fed. Cir. 1997) (reasoning that "[i]t is well settled that the recitation of a new intended use for an old product does not make a claim to that old product patentable," and the prior art inherently taught the patent's requirement that the claimed device "allows several kernels of popped popcorn to pass through at the same time" while

[17] The Start command operates just like a SYNCH0 command. *See* Ex. 1001, Fig. 1.

"permit[ting] the dispensing of only a few kernels" at a time); *ParkerVision, Inc. v. Qualcomm Inc.*, 903 F.3d 1354, 1361 (Fed. Cir. 2018) ("[A] prior art reference may anticipate or render obvious an apparatus claim—depending on the claim language—if the reference discloses an apparatus that is reasonably capable of operating so as to meet the claim limitations . . . ."). By not mentioning the start position for all of its embodiments via its generic description of "the invention," Comps shows that its system operates without the use of a start command and with a SYNCH command for each note, text, or image field.

Based on the foregoing discussion and after considering the full record, we determine that Petitioner shows by a preponderance of evidence that Comps anticipates claim 9.

3. Claim 2

Claim 2 recites

> [t]he method as claimed in claim 1, wherein the assignment rule is formed in such a way that each of the content-related second data segments are assigned to precisely one of the content-related first data segments and a further assignment is carried out after a number of sequentially succeeding content-related first data segments.

As it does for claim 1, Petitioner relies on Comps's Figure 3 for claim 2. Pet. 36–37. Petitioner contends that $JPEG_1$:$JPEGd_1$ is assigned precisely to Nf_2:Nd_2, $JPEG_2$:$JPEGd_2$ is assigned precisely to Nf_4:Nd_4, and the assignment between $JPEG_2$:$JPEGd_2$ and Nf_4:Nd_4 "is performed after one 'sequentially succeeding content-related first data segment[]' *i.e.*, Nf_3:Nd_3." Pet. 36 (citing Ex. 1004, 3:25–27, 3:65–4:2, Fig. 3).[18]

---

[18] The '794 patent specification describes an embodiment wherein

> the predefinable assignment rule is formed in such a way that *a*

Patent Owner relies partly on its unavailing argument for claim 1, for example, that Nf_2:Nd_2 is not a single content-related first data segment. *See* PO Resp. 61; *accord* Sur-reply 11–12. As found above and as Petitioner persuasively argues, Nf_2:Nd_2 defines one note, and $JPEG_1$:$JPEG_{d1}$ defines a single image, so each is a single content-related first data segment. *See* Reply 16–17.

Patent Owner also argues that "the alleged assignment is not carried out after a number of sequentially succeeding content-related first data segments," because "[t]here could be any number of first data segments between the assignment." PO Resp. 61–62. Patent Owner reasons that "the squiggly lines near the middle of Track 1 and 2 in Figure 3 indicate that any number of data segments could exist between the alleged first data segments." *Id.* at 62.

For the reasons noted in connection with claim 1 above, this line of argument is unavailing. That is, contrary to Patent Owner's argument, and as Petitioner shows, Comps does not disclose any content-related first data

---

> second data segment is assigned precisely to a first data segment and a further assignment is carried out following a number of sequentially succeeding first data segments. In this way the assignment rule can be described merely by specification of the number."

Ex. 1001, 2:47–52 (emphasis added). Unlike claim 2, this embodiment does not require *each* of the content-related second data segments to be assigned to precisely one of the content-related first data segments. In any event, it is evident from Petitioner's showing that Petitioner interprets the "further assignment" as to each of the content-related second data segments as simply another condition of the assignment rule. Patent Owner does not dispute this interpretation. *See* PO Resp. 61–62 (referring to the "alleged assignment" as one assignment).

segments between the "squiggly lines." *See* PO Resp. 62; Reply 20 ("Nothing in Comps suggests that the 'squiggly lines' in the respective delay periods in tracks 1, 2, and 3 are an indication that there are important events before SYNCH2 other than Nf_2:Nd_2 and $JPEG_1$."), 24 (referring to its arguments for claim 1).

That is, as Petitioner persuasively argues with respect to claim 1, Comps Figure 3 shows that it numbers each SYNCH command, which signifies there are no important events between the squiggly lines. Alternatively, even if there are important events between the squiggly lines, as also explained above in connection with claim 1 and as Petitioner argues, Comps provides a user option to designate each important event with a SYNCH command, thereby creating a specified number of first data segments "between the assignment." *See* Reply 24 ("[E]ven if the 'squiggly lines' meant that additional data segments could be present in the tracks, PO fails to square that suggestion with Comps'[s] express disclosure that important events (*i.e.*, 'content-related . . . data segments') are always preceded by a SYNCH command." (citing Ex. 1004, 4:44–47)).

The record supports Petitioner's showing. *See* Pet. 35–36. Based on the foregoing discussion and after considering the full record, we determine that Petitioner shows by a preponderance of evidence that Comps anticipates claim 2.

4. Claim 3

Claim 3 recites

> [t]he method as claimed in claim 1, wherein the assignment rule is formed in such a way that, for each of the content-related second data segments, the content-related first data segments are assigned by specification of a number, the

> number representing a position of the content-related first data segments within the order of content-related first data segments.

Similar to its showing for claim 1, the Petition annotates Comps's Figure 3, and in addition, relies on the numbering of Comps's SYNCH commands. *See* Pet. 38–39. Specifically, Petitioner contends that "[u]sing the numbered synchronization commands, *i.e.*, SYNCH1, SYNCH3, each of the picture segments $JPEG_1$:$JPEGd_1$, $JPEG_2$:$JPEGd_2$ is assigned to an associated one of the sound segments, *i.e.*, Nf_2:Nd_2, Nf_4:Nd_4, respectively." *Id.* at 38 (citing Ex. 1004, 3:57–4:18, Fig. 3). And "[t]he number (i.e., 1, 2, 3) of the synchronization commands, i.e., SYNCH1, SYNCH2, SYNCH3 that are executed by the microprocessors (i.e., 'the assignment rule', 'represent[s] the position of' the sound segments (i.e., 'content-related first data segments') 'within the order of' the sound segments, Nf_1:Nd_1, Nf_2:Nd_2, Nf_3:Nd_3, Nf_4:Nd_4." *Id.* (citing Ex. 1004, 3:57–4:2; Fig. 3).

Patent Owner contends that Comps's SYNCH commands, "which Petitioner alleges does the assigning, does not represent the position of the events within the order of the tracks." PO Resp. 62. Patent Owner also argues that "the data segment numbers do not assign the data segments to one another," and "multiple events in the same track have the same numbers." *Id.*

These arguments are unavailing as they largely rely on arguments addressed above in connection with claim 1. Also, claim 3 does not require the data segments to assign numbers. As determined above with respect to claim 1, Petitioner persuasively relies on content-related first data segments and treats notes and their duration as one content-related first data segment so that each content-related first data segment represents a different number and position, corresponding to the number of a respective SYNCH

command. *See* Pet. 37–38; Reply 24–25. Therefore, "the content-related first data segments are assigned by specification of a number"—assigned by specification of the number of the SYNCH command—so that the SYNCH "number represent[s] a position of the content-related first data segments within the order of content-related first data segments." *See* Reply 25 ("The numbers of the SYNCH commands are numbered in accordance with the ordering of the 'content-related first data segments' in the master track."); Pet. 37–38.

The record supports Petitioner's showing. *See* Pet. 37–30. Based on the foregoing discussion and after considering the full record, we determine that Petitioner shows by a preponderance of evidence that Comps anticipates claim 3.

5. Dependent Claims 4, 5, 10–13, and 15–17

Each of claims 4, 5, 10–13, and 15–17 depend directly or indirectly from one of independent claims 1 or 9. Petitioner provides citations to Comps and the testimony of Dr. Bederson to support its showing of anticipation. *See* Pet. 39–48.

For these dependent claims, Patent Owner relies on its same unavailing argument addressed above, namely that "Comps does not disclose any embodiments in which the events contain content data, such as WAV, MPEG, or text data," because "[t]he events in Comps only ever contain computer instructions for presenting these types of data." PO Resp. 43.

More specifically, Patent Owner states that "for the same reasons,"

> Comps does not meet the claim limitations in dependent claims that require the content-related data segments to contain specific

> kinds of content data. (EX1001, claim 5 ("media data"), claim 12 ("video and audio data"), claim 13 ("media data and metadata"), claim 14 ("metadata encoded according to the XML standard"), claim 15 ("media data").

PO Resp. 43 (citing Ex. 2011 ¶¶ 83–96).

Claim 5 recites "[t]he method as claimed in claim 1, wherein media data are represented by at least one of the first data file and the second data file." Claim 5 does not specify that media data are "content-related." In any event, Petitioner persuasively identifies Comps's two data files containing JPEG images, video data, and text messages, as media data, which are "content-related," for the reasons noted above in connection with claim 1. Pet. 41–42 (citing Ex. 1004, 2:6–14, 3:10–19; Ex. 1003 ¶ 100).

Claim 12 recites "[t]he method as claimed in claim 5, wherein the media data include at least one of video and audio data."

Claim 13 "[t]he method as claimed in claim 1, wherein at least one of media data and metadata are represented by at least one of the first data file and the second data file."

Claim 15 recites "[t]he method as claimed in claim 13, wherein the media data include at least one of video and audio data."

Similar to its showing for claim 5, Petitioner persuasively identifies video and audio sound data and media data, which are content-related, in addressing claims 12–15. Pet. 44–46 (citing Ex. 1004, 3:10–17, 3:48–49, Fig. 3; Ex. 1003 ¶¶ 111–115).

Accordingly, the record supports Petitioner's persuasive showing and does not support Patent Owner's arguments. Based on the foregoing discussion and after considering the full record, we determine that Petitioner

shows by a preponderance of evidence that Comps anticipates claims 4, 5, 10–13, and 15–17.

6. Dependent Claims 20 and 21

Claim 20 recites "[t]he method of claim 1, wherein the assignment rule is not based on a timestamp." Similarly, claim 21 recites "[t]he device of claim 9, wherein the assignment rule is not based on a timestamp."

The Petition shows that *Comps* discloses "[t]he synchronization commands are *not temporal commands*, as in the prior art, but are instead *dependent on a specific event*. Thus, the fields SYNCHi are not present in the tracks at regular time intervals." Pet. 49 (quoting Ex. 1004, 3:10–17 (emphasis added); citing *id*. at 2:20–23 ("The method is advantageously characterized in that *the important event corresponds to a command* to display a text, a command to display a picture, or a command to reproduce a sound.") (emphasis altered in original)). The Petition also states that "[a]ccordingly, the synchronization commands SYNCH1, SYNCH2, SYNCH3 that are executed by the microprocessors disclosed in *Comps* are 'not based on a timestamp.'" *Id.*

Patent Owner argues that in Comps, "the SYNCH commands of Comps synchronize important events by forcing the slave tracks to follow the precise timing data (i.e., the 'timestamps') of the master track." PO Resp. 57. Patent Owner provides a number of other arguments in an attempt to support of the contention that Comps's SYNCH commands use timestamps. *See id.* at 57–59 (citing Ex. 2011 ¶¶ 128–135).

As Petitioner argues, the record does not support these arguments and testimony. As Petitioner notes, Comps states that its SYNCH commands are "*not temporal commands*." Pet. 49 (emphasis to original) (quoting Ex. 1001,

3:44–47); *accord* Reply 20–21. As Dr. Bederson testifies, "the SYNCH commands in Comps are designed 'to avoid the use of timestamps.'" Reply 21 (quoting Ex. 1003 ¶¶ 89, 125). As Petitioner shows, Comps supports this credible testimony: "Comps makes clear that its SYNCH commands 'are not temporal commands . . . but are instead dependent on a specific event," and they are not 'present in the tracks at regular time intervals.'" Reply 20 (quoting Ex. 1004, 3:44–47).

Dr. Goodrich does not dispute that SYNCH commands are not temporal commands. *See* Ex. 2011 ¶ 130 ("The fact that synchronization commands are not temporal commands merely indicates that the synchronization commands are not placed at specific time intervals in the tracks."). However, Dr. Goodrich states that "Comps expressly requires slave tracks to follow the timing data (i.e., timestamps) of the master track." *Id.* ¶ 133. Dr. Goodrich does not cite any support for this testimony. *See id.* Comps does not describe anything about "timestamps." *See id.* Dr. Goodrich testifies that in Comps, "[t]he notes, duration of each of these notes, and wait time are executed at absolute time or time ranges" and a "synchronization command in the master track is encountered after these timestamps." *Id.* Dr. Goodrich also testifies that "the execution of the slave tracks is forced to catch up or slow down to match the timing of the master track." *Id.* ¶ 134.

However, even if correct, none of this testimony shows that the assignment rule is based on a timestamp. Dr. Goodrich appears to base his conclusory opinion on the assertion that Comps inherently uses timestamps to keep track of segments. But as Patent Owner recognized during the Oral Hearing and as discussed above, the '794 patent also employs timestamps.

Asked about column 6, line 46 of the ’794 patent, Patent Owner stated that “it’s talking about how the data segments could be transmitted, and it says you could use this RTP protocol, and it says that some of the data segments, the ones that are assigned to one another using the assignment rule are provided with an identical timestamp.” Tr. 34:11–16. He also states that “they have the same time stamp because they are intended to be output together,” and “the ’794 specification references MPEG 2, MPEG 4, and a person of ordinary skill in the art is going to know that those all involve video and audio with time stamps,” because “[i]t’s not that time stamps cease to exist in the context of the ’794 patent, it’s just that they’re not what are being used to assign data segments to one another.” *Id.* at 34:21–26.

As found above, Comps does not even mention timestamps, but to the extent they are inherent in audio and video data, Comps uses non-temporal SYCNH commands to assign data segments to one another and does not use time stamps when it sends data about the SYNCH command from the master to the slave processor (or thereafter). *See* Ex. 1004, 4:25–50 (describing how the master processor sends SYNCH data to the slave microprocessors when it encounters a SYNCH command); Ex. 1003 ¶ 89 (Comps discloses “[t]he synchronization commands are not temporal commands, as in the prior art, but are instead dependent on a specific event.” (quoting Ex. 1004, 3:44–47), 125 (similar)). As Dr. Bederson also testifies, “the synchronization commands in Comps being executed by the microprocessors, which is the ‘assignment rule’ would not be performed by using exact timing information for the data segments for example, by using data segment timestamp information.” *Id.* ¶ 89. Comps aligns with Dr. Bederson’s testimony more than it does with that of Dr. Goodrich,

because Comps does not mention timestamps and Comps states that the SYNCH commands are not temporal. Similar to how Patent Owner described the '794 patent's system, timestamps in Comps "[are] not what are being used to assign data segments to one another"—non-temporal SYNCH commands are. *See* Tr. 34:21–26.

Based on the foregoing discussion and after considering the full record, we determine that Petitioner shows by a preponderance of evidence that Comps anticipates claims 20 and 21.

F. Challenges over Comps and Wan, Claims 6–8 and 22

Petitioner challenges dependent claims 6–8 and independent claim 22 as unpatentable for obviousness over Comps and Wan. Pet. 50–59. Petitioner identifies particular passages in the prior art as teaching or suggesting the subject matter additionally recited in these dependent claims and provides reasons for combining the teachings. *Id.*

1. Claim 6

Petitioner identifies particular passages in Comps and Wan as teaching or suggesting the subject matter additionally recited in claim 6 and provides reasons for combining the teachings. Pet. 50–51. The record supports Petitioner's showing. *See id.*

Patent Owner does not provide separate arguments for claim 6. *See generally* PO Resp. Based on the full record, we determine that Petitioner shows by a preponderance of evidence that Comps and Wan render claim 6 unpatentable.

2. Claims 7, 8, and 22

Claim 7 recites "[t]he method as claimed in claim 1, further comprising: determining, based upon a content-related marker, which

content-related first data segments and content-related second data segments are to be output first in time."

Petitioner contends that "*Comps* discloses all of the elements in claim 7 except 'determining, based upon a content-related marker, which content-related first data segments and content-related second data segments are to be output first in time.'" Pet. 52.

To provide context, Petitioner notes that the '794 patent describes the following:

> [I]t can be beneficial to determine the first and second data segments S1, S2 to be output first in time in each case within the first and second files D1, D2 on the basis of a marker M . . . . In the example according to FIG.4, a first and a second marker M1, M2 are inserted, the first marker M1 being identified by means of a text 'Start 1' and the second marker by way of a text 'Start 2'.

Ex. 1001, 6:50–63.

Petitioner contends that, similar to the '794 patent, Wan describes content markers within a scene description stream 46, which in turn point to object descriptors ODn in an object descriptor stream 47. Pet. 52 (citing Ex. 1005 ¶ 53, Fig. 4C). Petitioner explains that Wan's scene marker descriptions also provide a temporal relationship to stream elements and determine what content from different segments are output first in time, while also allowing a viewer access to multiple camera angles in a single video stream. *See id.* at 53 ("*This is to be contrasted with arbitrary descriptions which have no definable temporal relationship with the streamed content*." (quoting Ex. 1005 ¶ 54) (emphasis added to original)).

Patent Owner argues it would not have been obvious to modify Comps in view of Wan's content-related markers because "[t]here is no need

to determine which event is to be output first in Comps, as it will always be the one at the beginning of the track." PO Resp. 63 (citing Ex. 1004, 2:60–67, 4:18–42; Ex. 2011 ¶ 147). This argument is close to a concession that Comps's Start command is a marker. *See* Ex. 1004, Fig. 3; Reply 25 ("Even assuming there is no independent need to determine which event in Comps is to be output first . . . .").

In any event, this argument does not address Petitioner's additional rationale, which Wan supports, that Wan's markers allow a viewer access to multiple camera angles in a single video stream. *See* Pet. 53–54; Reply 25–26. The argument also does not address Petitioner's related rationale that Comps describes resource constraints for processing multimedia files including the computation power to process large files and Wan teaches that using descriptive markers is relatively efficient: "[T]he description does not have to be repeated as frequently as the AV content because the description changes much less frequently and, at the same time, *consumes significantly fewer computing resources* at the decoder end." *See* Reply 21–23 (citing Ex. 1003 ¶ 149 (quoting Ex. 1005 ¶ 73)), 25–26 (citing Reply Section VIII).

Petitioner's showing is persuasive. Even if Comps already provides information as to what outputs are first in time, Wan suggests a similar method of determining what outputs are first in time while providing added descriptive information and multiple viewing angles.

Claim 8 recites "[t]he method as claimed in claim 7, wherein at least one of a scene change in an image sequence and a change of speaker in a speech sequence is identified by way of at least one of the first content-related markers and the second content-related markers." As Petitioner

notes, there is no antecedent basis for "'the first content-related markers' or 'the second content-related markers.'" Pet. 54 n.7.

Nevertheless, Petitioner contends that Comps discloses "the limitations in claim 8 except 'wherein at least one of a scene change in an image sequence and a change of speaker in a speech sequence is identified by way of at least one of the first content-related markers and the second content-related markers.'" Pet. 54. Petitioner relies on Wan's disclosure of "scene description stream 46 that is separate from content that can be used for transmitting *updates to scene graphs*, which are 'content-related markers.'" *Id.* at 55 (citing Ex. 1005 ¶ 47). Petitioner contends that Wan "establishes the advantages of an XML-based metadata stream with a separate content stream, and how that is more 'efficient' and can work well with a 'low bandwidth communication link.'" *Id.* at 55 (quoting Ex. 1005 ¶¶ 3–4, 38–39).

According to Petitioner,

> [*Comps*] teaches that a display of the pictures represented by fields JPEG1 and JPEG2 would be identified by fields JPEG1:JPEGd_1 and JPEG2:JPEGd_2, respectively. . . . The use of media segments in a stream corresponds to *Wan's* teaching of media streams 41 and 42. . . . Thus, a POSITA would have known that *Wan's* teaching the use of the scene description stream 46 for transmitting updates to scene graphs can similarly be used with the media data segments in *Comps* to cause a "scene change in an image sequence" "identified by way of . . . content-related markers" as recited in claim 8.

Pet. 56 (citing Ex. 1004, 3:31–37; Ex. 1005 ¶ 53, Fig. 4C; Ex. 1003 ¶ 137).

Patent Owner refers to its arguments for claim 7, and contends that "Petitioner does not make any showing of how the updates to scene graphs can be used in Comps to determine which of the alleged content-related data

segments are to be output first in time." PO Resp. 63. Patent Owner also asserts that "Wan is completely silent whether updates to scene graphs can be used for determining which of the alleged content-related data segments are to be output first in time." *Id.* at 63–64 (citing Ex. 2011 ¶ 148).

These arguments are unavailing. Petitioner relies on Wan's scene description stream to "define a temporal relationship among the streamed content." *See* Pet. 59 (citing Ex. 1005 ¶ 54; Ex. 1003 ¶ 34); Reply 26 (citing Ex. 1003 ¶¶ 135–137, 141). Based on Wan's disclosure, Petitioner contends that "a POSITA would have known that the markers determine which content from different segments are 'output first in time.'" Pet. 53–54. In addition, claim 8's "first content-related markers and the second content-related markers" do not refer back explicitly or inferentially to claim 7's "a content-related marker," so it is not clear how the recited markers in claim 8 must require the segments in claim 7 to be first in time according to claim 8's markers. And Patent Owner does not explain what claim 8 requires in this context to the extent that it undermines Petitioner's showing.

Claim 22 recites limitations that are similar to claim 1, and in addition, includes limitation 22.a.2 (according to Petitioner's notation), directed to first and second "content-related markers," as follows: "the content-related first data segments being ordered according to corresponding first content-related markers and the content-related second data segments being ordered according to corresponding second content-related markers." Petitioner relies on Comps and its showing for claim 1 to address the other limitations for claim 22. *See* Pet. 56–63 (citing Ex. 1003 ¶¶ 138–151); Ex. 1003 ¶¶ 138–140, 143–146. Petitioner relies on the combination of Wan and Comps to address limitation 22.a.2. *See* Ex. 1003 ¶¶ 141–142, 147–151.

In particular, Petitioner contends that Wan and Comps both similarly disclose synchronizing audio and video files, wherein Wan employs an internal time graph. *See* Pet. 61–62 (citing Ex. 1005 ¶¶ 43–45; Ex. 1003 ¶ 148). As indicated above, Petitioner contends that Wan satisfies resource constraint issues raised by Comps while also providing scene descriptors. *See id.* at 62–64 (citing Ex. 1003 ¶¶ 149, 151). Dr. Bederson explains that Wan teaches "that separating the metadata from the content so that the XML metadata document can be parsed as soon as a sufficient portion of it is received will be 'most useful in the case of a low bandwidth communication link and/or a device with very limited resources.'" Ex. 1003 ¶ 149 (citing Ex. 1005 ¶¶ 38–39).

Petitioner contends that Comps already discloses data segments that perform functions similar to the first and second content-related markers as contemplated by Wan. *See* Pet. 59–60 ("The sound fields Nf_1:Nd_1, Nf_2:Nd_2, Nf3:Nd3, Nf4:Nd4 are 'first content-related markers' and the picture fields $JPEG_1$:$JPEGd_1$, $JPEG_2$:$JPEGd_2$, and text fields $TEXT_1$, $TEXT_2$ are 'second content related markers.'" (citing Ex. 1004, 3:22–37)). Petitioner contends that Wan's "markers . . . define a temporal relationship among the streamed content." *Id.* at 59 (citing Ex. 1005 ¶ 54). Therefore, combining Wan's teachings with Comps's method results in treating Comp's data segments as metadata markers in one data stream that define temporal relationships and point to instructions or data in another data stream in order to address problems of resource constraints in Comp while also providing scene descriptors. *See* Pet. 59–61; Ex. 1003 ¶ 149.

Patent Owner contends that "Petitioner has failed to make a prima facie case of why such modifications to Comps would be obvious to the

POSITA." PO Resp. 61. Patent Owner argues that it would not have been obvious to modify "Comps with Wan's alleged content-related markers to determine the order of outputting the alleged data segments." *Id.* at 60. According to Patent Owner, "Comps only describes tracks in which the desired order of the alleged data segments is already determined, as the microprocessors scan each track linearly." *Id.* citing (Ex. 1004, Fig. 3, 3:55–4:24.) Patent Owner also argues that "[a]dding Wan's alleged content-related markers to Comps to determine the order of outputting the alleged data segments would require reconfiguring the microprocessors to scan the tracks based on the content-related markers." *Id.* Therefore, Patent Owner posits that "[t]his would require additional non-obvious modifications to SYNCH commands so that Comps can maintain its essential functionality of forcing the slave tracks to be synchronized with the master track by adjusting the timing of events." *Id.* Patent Owner also argues that "[a]dding Wan's alleged content markers to Comps would further complicate matters as the microprocessors would have to first determine the order of the alleged data segments based on the content markers and then determine if the encountered SYNCH commands in the different tracks correspond with each other." *Id.* at 61.

Patent Owner's arguments are unavailing. As indicated above, the combination simply results in modifying Comps so that its data segments act as metadata markers that point to data in another stream without appreciably altering the SYNCH technique of Comps. Dr. Bederson further explains that "[a] combination of *Comp* and *Wan* would have simply added the scene description stream of *Wan* to the multiple tracks of *Comp* in a way that was already disclosed by Wan." Ex. 1003 ¶ 151. Therefore, according to

Dr. Bederson, "[t]he result would have been predictable since it would use the technology described in *Wan along with the multiple tracks, files, and synchronization commands described in Comps.*" *Id.* (emphasis added). Dr. Bederson also explains as follows:

> Especially given the strong background knowledge about synchronization of multimedia content that a POSITA would be familiar with, and the use of well-known technologies such as XML and streaming content, the specific combination of *Comps* with *Wan* would have been technically straightforward and there would be a reasonable expectation of success. In particular, *Comp* discloses multiple streaming tracks of content in different files, and *Wan* also discloses multiple streaming tracks of content in different files as well as an additional scene description stream . . . .

Id. (citing Ex. 1005, Fig. 3, ¶ 43).

Patent Owner's arguments fail to rebut Dr. Bederson's testimony and Petitioner's showing that the combination does not alter the process of Comps appreciably and provides certain benefits related to resource constraints and added scene descriptions based on well-known marker techniques as described by Wan.

Based on the foregoing and a review of the record, we determine that Petitioner shows by a preponderance of evidence that claims 6–8 and 22 would have been obvious over Comps and Wan.

G. Challenges over Comps and Anh, Claim 14

Petitioner challenges dependent claim 14 as unpatentable for obviousness over Comps and Ahn. Pet. 64–68. Petitioner provides citations to Comps and Any and the testimony of Dr. Bederson to support its obviousness showing. *See id.* (citing Ex. 1003 ¶¶ 153–160).

The record supports Petitioner's showing. *See* Pet. 64–68. As outlined above, Petitioner identifies particular passages in the prior art as teaching or suggesting the subject matter additionally recited in claim 14 and provides reasons for combining the teachings. *Id.* Patent Owner does not address claim 14 separately. *See generally* PO Resp.

Based on the full record, we determine that Petitioner shows by a preponderance of evidence that Comps and Anh would have rendered claim 14 unpatentable.

H. Challenges over Comps and Kim, Claims 18 and 19

Petitioner challenges dependent claims 18 and 19 as unpatentable for obviousness over Comps and Wan. Pet. 68–72.

Claim 18 recites "[t]he method of claim 1, wherein the assignment rule is maintained in a file separate from the first data file and the second data file." Claim 19 similarly recites "[t]he device of claim 9, wherein the assignment rule is maintained in a file separate from the first data file and the second data file." Claims 18 and 19 are materially similar for purposes of this trial.

Petitioner relies partly on its showing for claim 1, contending that Comps discloses "an assignment rule," "a first data file," and "a second data file." Pet. 68. Petitioner acknowledges that "*Comps* does not disclose that the 'assignment rule is maintained in a file separate from the first data file and the second data file.'" *Id.*

Petitioner turns to Kim and contends that Kim discloses lyric or user data related to a recorded song, and further contends that Kim's system stores the lyric or user data "*in a file separated from the management information file storing* management information *for controlling*

reproduction of all of recorded audio data." Pet. 69 (quoting Ex. 1007, claim 7; citing *id.* ¶¶ 32, 34, 40–45; Ex. 1003 ¶¶ 162–166). According to Petitioner, it would have been obvious to store Comps's assignment rule, or SYNCH IDs, which is information regarding management of content information, in a file separate from the first and second data files, as a well-known method for synchronizing different types of data, where both Kim and Comps disclose synchronizing different types of data, and where only two possibilities exist, storing management information in the same file as the data or a different file. *See id.* at 70 (citing Ex. 1004, 2:6–9; Ex. 1003 ¶¶ 168–170).

Patent Owner contends that using a separate file to maintain the "assignment rule" of Comps "would break Comps" and "would require additional coordination between the tracks and the different file(s)." PO Resp. 64–65 (citing Ex. 2011 ¶¶ 149–151). Patent Owner also contends that Petitioner relies on SYNCH IDs and not SYNCH commands, with the latter the assignment rule. Patent Owner also argues that Petitioner "ignore[s] Goodrich's analysis," and "moving SYNCH commands into a different file changes the principal operation underpinning Comps." Sur-reply 27.

Contrary to these arguments, Petitioner shows that an artisan of ordinary skill would have had a reasonable expectation of success in maintaining the assignment rule in a separate data file where the technique of separating management instructions from data in separate files was well-known as Wan teaches. *See* Pet. 69–71 (citing Ex. 1003 ¶¶ 165–171). As Wan specifically teaches, the method provides control of the reproduction of the data. *See id.* at 60 (quoting Ex. 1007, claim 7). Dr. Bederson refers to SYNCH IDs and also states that a "POSITA would look to *Kim* and learn

that any kind of information regarding management of information files could be stored in a file that was separate from the information files. This would include *the SYNCH commands* of *Comps*, wh[ich] is information regarding management of content information." Ex. 1003 ¶ 165 (emphasis added). In other words, Dr. Bederson relies on keeping the SYNCH designations in Comps's data tracks, with those designations pointing to SYNCH IDs, which is what Petitioner and Dr. Bederson refer to as the portion of the command that specifies what the SYNCH actually does. *See* Ex. 1003 ¶ 165; Tr. 29:10–30:7. Dr. Bederson's analysis is persuasive in contrast to Dr. Goodrich's conclusory testimony, which does not address the thrust of Petitioner's combination that keeps the SYNCH designations in Comps's tracks as pointers to other information. *See* Ex. 2011 ¶¶ 149–151 (providing testimony tracking Patent Owner's arguments). Given that Comps does not specify where it stores the actual microprocessor instructions that inform the processor how to respond to a SYNCH event in the data file, modifying Comps as Kim suggests does not appreciably alter the method of Comps.[19]

After a full review of the record, we determine that Petitioner establishes by a preponderance of evidence that claims 18 and 19 would have been obvious over Comps and Kim.

---

[19] *See* Ex. 1004, 4:25–29 ("The master microprocessor, which is dedicated to track 1, reaches the first synchronization command, corresponding to the field SYNCH1, and sends first synchronization data to the other microprocessors."). The slave microprocessors respond differently to the SYNCH commands than the master microprocessor, indicating that the slaves each separately store instructions for implementing the commands depending on the timing lag or lead of each slave relative to the master processor. *See id.* at 4:30–44.

III. CONCLUSION

For the reasons discussed above, Petitioner has shown by a preponderance of the evidence that claims 1–22 of the '794 patent are unpatentable.

The following table summarizes our conclusions: [20]

Claim(s)	35 U.S.C. §	Reference(s)/ Basis	Claim(s) Shown Unpatentable	Claim(s) Not shown Unpatentable
1–5, 9–13, 15–17, 20, 21	102(a), 102(e)	Comps	1–5, 9–13, 15–17, 20, 21	
6–8, 22	103(a)	Comps, Wan	6–8, 22	
14	103(a)	Comps, Anh	14	
18, 19	103(a)	Comps, Kim	18, 19	
Overall Outcome			1–22	

IV. ORDER

In consideration of the foregoing, it is hereby

[20] Should Patent Owner wish to pursue amendment of the challenged claims in a reissue or reexamination proceeding subsequent to the issuance of this decision, we draw Patent Owner's attention to the April 2019 *Notice Regarding Options for Amendments by Patent Owner Through Reissue or Reexamination During a Pending AIA Trial Proceeding*. *See* 84 Fed. Reg. 16,654 (Apr. 22, 2019). If Patent Owner chooses to file a reissue application or a request for reexamination of the challenged patent, we remind Patent Owner of its continuing obligation to notify the Board of any such related matters in updated mandatory notices. *See* 37 C.F.R. § 42.8(a)(3), (b)(2).

ORDERED that Petitioner establishes by a preponderance of evidence that challenged claims 1–22 are unpatentable; and

FURTHER ORDERED that, because this is a Final Written Decision, parties to the proceeding seeking judicial review of the decision must comply with the notice and service requirements of 37 C.F.R. § 90.2.

MCKONE, *Administrative Patent Judge*, concurring:

As explained in my Concurrence to the Institution Decision (and not otherwise repeated here), my reading of claim 1 (and the similar limitations of claims 9 and 21) is that the preamble is limiting and that claim 1 requires that each content-related second data segment of a second data file, rather than certain ones of a subset, is output together with an associated content-related first data segment of a first data file.[1]

The Majority construes "content-related . . . data segments" to mean "segments of content or data related to content that have a syntactical meaning within the respective data file."[2] However, the Majority fails to explain what "syntactical meaning within the respective data file" means, or apply that term in a workable manner. As the Majority observed in the Institution Decision (and acknowledges now), "[t]he term 'content-related' is somewhat subjective because there is not much guidance in the '794 patent specification as to what a 'syntactical meaning' encompasses." Inst. Dec. 17; *see also id.* at 9 n.8 ("We also recognize that whether two segments have 'syntactical meaning' between them may be somewhat subjective.").[3]

---

[1] Patent Owner argues that the preamble is limiting. PO Resp. 17–23. Petitioner takes no position as to whether it is limiting. Tr. 4:23–5:2, 30:12–14.

[2] I agree with the Majority that content-related data segments are not limited to content itself (such as sampled audio) and can include data related to content.

[3] If the problem is that the '794 patent does not provide sufficient guidance as to what "syntactical meaning" is, then the claims might be indefinite, a ruling we cannot make in an *inter partes* review. On the other hand, if the '794 patent, as read by a skilled artisan, does provide sufficient guidance, and the parties have not shown that to us, this is a failure that should be borne by Petitioner, as the party bearing the burden of persuasion.

The Majority cites to a general-purpose dictionary to define "syntax" as the way in which terms are combined to form phrases and sentences, but reasons that the term embraces broader subject matter than this purported plain meaning. In applying claim 1 to Comps, the Majority appears to embrace Petitioner's view that certain of Comps's commands have syntactical meaning because they are subjectively "important," and other commands do not have syntactical meaning because they are unimportant.

Petitioner does not introduce any evidence to show that syntactical meaning and subjective importance are the same, or even that they are related.[4] More relevant dictionary definitions do not support equating the two. *See* IEEE 100, THE AUTHORITATIVE DICTIONARY OF IEEE STANDARDS TERMS 1143, 7th ed. (2000) (Ex. 3003) ("**syntax** . . . (**2**) (**software**) The structural or grammatical rules that define how the symbols in a language are to be combined to form words, phrases, expressions, and other allowable constructs. . . . (**4**) The structural components or features of a language and rules that define the ways in which the language constructs may be assembled together to form sentences. . . . (**6**) The structure of expressions in a language and the rules governing the structure of a language."). According to the '794 patent, the preferred embodiment of data files include "media data, in particular video or audio data, and/or metadata, in particular

[4] Patent Owner offers no meaningful help either. However, Petitioner has the burden to prove unpatentability. *See* 35 U.S.C. § 316(e). And Petitioner has an obligation under our rules to "identify . . . . [h]ow the challenged claim is to be construed." 37 C.F.R. § 42.104(b)(3). Thus, if neither party provides sufficient evidence to support their respective positions on a dispositive point (which is the situation here), it is Petitioner who should lose on that point.

encoded according to the XML standard." Ex. 1001, 3:4–8. Document [1], referred to in the '794 patent (Ex. 1001, 1:62–63, 7:30–34), provides detailed examples of bitstream syntax for XML files conforming to MPEG standards. G. Panis et al., *Bitstream syntax description: a tool for multimedia resource adaptation within MPEG-21*, 18 IMAGE COMMUNICATION 721–47 (2003) (Ex. 3004). A segment of a media file that has syntactical meaning would appear to be a segment that is a structural component or feature of the file (in the preferred embodiment, a segment of a specialized XML file) that helps define how the content of the file should be assembled together and presented. Whether a command in a file has subjective importance to the consumer or producer of the media is not relevant to whether that command is a structural component of a file that is combined with other commands to form expressions and is part of the presentation of the file.

On the other hand, a construction of "content-related . . . data segments" that rules a segment in or out based on subjective importance is impermissible. *See PLR Worldwide Sales, Ltd. v. Flip Phone Games Inc.*, IPR2024-00133, Paper 12 at 7 (Aug. 22, 2024) (on Director Review) ("the Board's claim construction of the term 'a non-promotional background object' was improperly based on the subjective views of the user."); *Amazon.com, Inc. v. Barnesandnoble.com, Inc.*, 239 F.3d 1343, 1353 (Fed. Cir. 2001) ("We are not prepared to assign a meaning to a patent claim that depends on the state of mind of the accused infringer."). Comps itself illustrates why Petitioner's framework breaks down. Comps describes inserting SYNCH commands "before each event-related command characterizing an important event." Ex. 1004, 2:17–19. An "important

command" is, "i.e. a command whose execution must not be interrupted." *Id.* at 4:44–45. "In the FIG. 3 example, musical notes included in the track 1 data must not be interrupted. Synchronizing the three tracks must not entail interrupting the music heard by the user." *Id.* at 3:48–51. Thus, the important events in this example are on Track 1, not Tracks 2 or 3. The SYNCH commands are used to line up Tracks 2 and 3 to the important events of Track 1. *Id.* at 3:57–4:17. Under Petitioner's reasoning, none of the images or texts of Tracks 2 or 3 would be content-related, as they can be interrupted in order to synchronize Tracks 2 and 3 to Track 1; thus, commands on Track 2 and 3 are unimportant.

Assuming commands on Tracks 2 and 3 can be important, Petitioner would exclude commands such as $JPEGD_1$ and $JPEGD_2$, commands that represent time delay, from content-related data segments because they are unimportant. Pet. 33–34; Reply 18–20. The Majority endorses this view, in part because they find that the '794 patent does not provide specific examples of delay time being considered content-related. This is problematic for two reasons. First, the '794 patent does not exclude aspects of timing or delay from having syntactical meaning in the XML files of its examples. Second, Comps describes different files (with different syntax) than those of the '794 patent's preferred embodiments; thus, the proper framework is to determine whether Comps's commands, including delay commands, have syntactical meaning within the files it describes. The various aspects of Comps's timing in Track 2, including the duration to display a picture (e.g., $JPEG_{d1}$) and a delay when no picture is displayed (e.g., $JPEGD_1$), are commands in the file of Track 2 that determine how visual data are presented, including when they are presented relative to the

audio of Track 1 and, thus, would appear to have syntactical meaning within the file of Track 2. Ex. 1004, 3:57–4:17. I do not see a reason, supported by evidence, to exclude either type of delay command from content-related data segments. That one delay ($JPEG_{d1}$) specifies how long data will be displayed and another ($JPEGD_1$) specifies a time in which no data is displayed does not provide a sufficient distinction, as the Majority has construed "content-related . . . data segments" to include "segments of . . . data related to content" as well as segments of content data.[5]

Thus, I would not find that Petitioner has shown that, in the example of Comps's Tracks 1 and 2, each content-related second data segment of a second data file is output together with an associated content-related first data segment of a first data file. Instead, there appear to be some content-related data segments of Track 2 (e.g., $JPEGD_1$) that are not output together with an associated content-related first data segment. It follows, then, that Petitioner has not met its burden to show, by a preponderance of the evidence, that the example of Comps's Track 1 and 2 anticipates or renders obvious any claim of the '794 patent.

---

[5] If the Majority is reading "content-related . . . data segments" as Petitioner argued at the hearing, i.e., "it's got to be content related and it's got to have some syntactical meaning to it," Tr. 72:23–24, that would be improperly reading into the construction an additional limitation beyond the express definition in the specification, i.e., "[t]he term 'content-related' is understood to mean that first and second data segments have a syntactical meaning within the respective data file." Ex. 1001, 4:14–17. In other words, a segment is content-related because it has a syntactical meaning within the data file, not because it also contains something besides silence or delay.

Nevertheless, I would find that Petitioner has met its burden for the example of Comps's Tracks 1 and 3 of Figure 3. In this example, if track 3 is denominated the second file and track 1 the first file, it appears that each command in track 3 (whether important or unimportant) is output together with a command in track 1. This appears to be the case whether delay, such as $TEXTD_1$ is considered content-related or not. Track 3 does not appear to have the situation where an interval between successive SYNCH commands has both a TEXT and a TEXTD command. In other words, in Track 3, there is only one command executed in each such interval (either a TEXT or a TEXTD), and that command will be output together with a command in Track 1. Thus, I concur with the Majority's findings as to this example and with the ultimate conclusion that claims 1–22 of the '794 are unpatentable.

For PETITIONER:

Aliza Carrano
Indranil Mukerji
Dane Sowers
WILLKIE FARR & GALLAGHER LLP
acarrano@willkie.com
imukerji@willkie.com
dsowers@willkie.com

For PATENT OWNER:

Christine Lehman
Michael Matulewicz-Crowley
Naveed Hasan
Jaime Cardenas-Navia
REICHMAN JORGENSEN LEHMAN & FELDBERG LLP
clehman@reichmanjorgensen.com
mmatulewicz-crowley@reichmanjorgensen.com
nhasan@reichmanjorgensen.com
jcardenas-navia@reichmanjorgensen.com