WO

IN THE UNITED STATES DISTRICT COURT
FOR THE DISTRICT OF ARIZONA

Extremity Medical, LLC, Plaintiff, v. Fusion Orthopedics, LLC, Defendant.	No. CV-22-00723-PHX-GMS **ORDER**

Pending before the Court are the parties' briefs addressing claim construction. (Docs. 60, 63, 68). Also pending is Defendant Fusion Orthopedics, LLC's ("Fusion") Motion for Leave to File Sur-Reply Regarding Claim Construction (Doc. 70). The Court held a *Markman* Hearing on June 22, 2023, at which the parties presented additional arguments. For the reasons set forth below, the Court makes the following constructions and interpretations of the disputed claims. Further, Defendant's Motion for Leave (Doc. 70) is denied.

BACKGROUND

I. Parties and Underlying Lawsuit

Extremity Medical, LLC ("Extremity") is a medical engineering company that designs, manufactures, and sells surgical devices, specifically, "products for fusion, fixation and motion-preserving systems for the upper and lower extremities of the human body, including the hands and feet." (Doc. 1 at 4.) On April 12, 2022, the United States Patent

Extremity Medical, LLC
EXHIBIT 2015
Fusion Orthopedics v. Extremity Medical
Case IPR2023-00894

and Trademark Office ("USPTO") issued U.S. Patent No. 11,298,166, entitled "Fixation System, an Intramedullary Fixation Assembly and Method [o]f Use" (the "166 Patent"). Extremity owns the 166 Patent and claims that Fusion, a medical device company founded by a former Extremity employee, has developed, sold, and manufactured an infringing product, its "IntraLock System." Thus, Extremity filed a civil action for patent infringement in this Court on April 28, 2022.

II. 166 Patent

The 166 Patent is a three-piece surgical implant that stabilizes fractured bones and facilitates a healing process known as bone fusion (osteosynthesis), wherein broken bones "fuse" back together. The implant is drilled into the hollow middle of a patient's bones (intramedullary, i.e., bone canal) after an injury or during other corrective bone surgery (osteotomy).

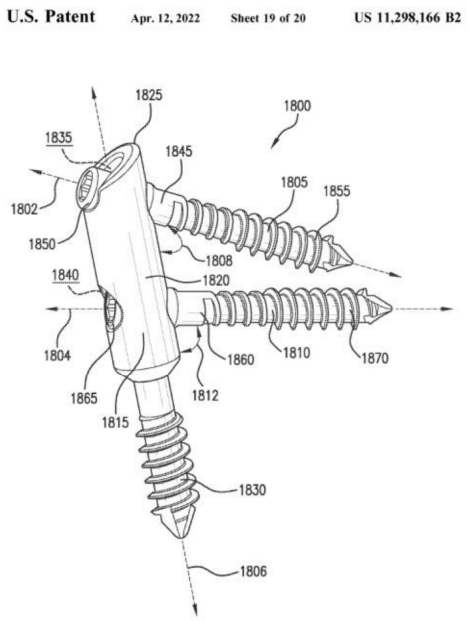

FIG. 18

The implant (depicted above) has two primary sections: a hollow cylindrical base with an opening at the top and a screw-like end. Together, these sections comprise the "third member" or "bone nail." The third member's screw-like end is inserted into a

patient's unbroken bone and is drilled until the opening at the top of the nail is near (or flush with) the bone's surface. The third member's hollow base has two holes. One hole is the opening at the top of the bone nail. A second hole runs perpendicularly through the side of the hollow base. The parties sometimes refer to these holes as boring holes or apertures.

Two bone screws (members) can be positioned through these holes and placed at different angles (boring angles) relative to the hollow base. The parties (and the relevant specification) refer to the top screw as "the first member" and the bottom screw as "the second member." The first member enters a patient's broken bone and secures a fracture. The second member also enters a bone and secures the third member to an unbroken bone; thus, the bottom screw is often called a "locking screw" because it stably aligns the bones in a fixed position until bone fusion occurs. (Doc. 63 at 6.) The first and second members each are made up of a base surrounded by a helical structure called a "thread." (Doc. 63 at 12.)

In its Opening Brief, Extremity notes that the 166 Patent arose from U.S. Patent Application No. 17/323,923, which is related to a series of other patent applications. (Doc. 60 at 7.) Two of these applications, U.S. Patent Application No. 15/884,048, and U.S. Patent Application No. 12/658,680, are relevant to the parties' proposed constructions and will be discussed in more detail below.

III. Claims

The parties dispute terms within Claims One and Twelve of the 166 Patent. The Claims are outlined below, and the disputed terms are underlined.[1] **Claim One** states:

> The invention claimed is:
>
> 1. An assembly for bone fusion, comprising:

[1] In the parties' Joint Claim Construction and Prehearing Statement, Fusion indicated that it planned to ask the Court to construe the term "torque transmitting aperture" as it appears in Claim Four. (Doc. 59 at 2.) Fusion withdrew this request in its Response. (Doc. 63 at 6, n.1.)

a first member comprising a first elongated body extending from a first end to a second end along a first longitudinal axis, wherein the first member comprises a shaft portion having an external surface and a head portion having an exterior surface, said first member further comprising a first thread having a first thread height extending radially outward from the external surface of said shaft portion;

a second member comprising a second elongated body extending from a first end to a second end along a second longitudinal axis, wherein the second member comprises a shaft having an external surface, said second member further comprising a first thread having a first thread height extending radially outward from the external surface of said shaft;

a third member comprising a third elongated body extending along a straight line from a first end to a second end along a third longitudinal axis, wherein the third member comprises a first aperture at a terminal end of the first end of the third elongated body, and a first bore extending along a first bore axis from the first aperture to a second aperture on an exterior surface of the third member, wherein the first bore comprises an interior surface at the first aperture, wherein there are no threads adjacent to the second aperture on the exterior surface of the third member, and wherein the third longitudinal axis and the first bore axis define a first angle,

wherein the third member further comprises a third aperture on the exterior surface of the third member, and a second bore extending along a second bore axis from the third aperture to a fourth aperture on an exterior surface of the third member, wherein the third longitudinal axis and the second bore axis define a second angle,

wherein the first member couples to the third member by inserting the first end of the first member into the first aperture, through the first bore, and out of the second aperture,

wherein the second member couples to the third member by inserting the first end of the second member into the third aperture, through the second bore, and out of the fourth aperture,

wherein the first angle is in the range of about 0 degrees to about 90 degrees,

wherein the second angle is in the range of about 0 degrees to about 90 degrees, and

wherein the second bore axis is substantially perpendicular to the third longitudinal axis.

Claim Twelve states:

12. An assembly for bone fusion, comprising:

a first member comprising a first elongated body extending from a first end to a second end along a first longitudinal axis, wherein the first member comprises a shaft portion having an external surface and a head portion having an exterior surface, said first member further comprising a first thread having a first thread height extending radially outward from the external surface of said shaft portion;

a second member comprising a second elongated body extending from a first end to a second end along a second longitudinal axis, wherein the second member comprises a shaft having an external surface, said second member further comprising a first thread having a first thread height extending radially outward from the external surface of said shaft;

a third member comprising a third elongated body extending along a straight line from a first end to a second end along a third longitudinal axis, wherein the third member comprises a first aperture at a terminal end of the first end of the third elongated body, and a first bore extending along a first bore axis from the first aperture to a second aperture on an exterior surface of the third member, wherein the first bore comprises an interior surface at the first aperture, wherein there are no threads adjacent to the second aperture on the exterior surface of the third member, and wherein the third longitudinal axis and the first bore axis define a first angle,

wherein the third member further comprises a third aperture on the exterior surface of the third member, and a second bore extending along a second bore axis from the third aperture to a fourth aperture on an exterior surface of the third member, wherein the third longitudinal axis and the second bore axis define a second angle,

wherein the first member couples to the third member by inserting the first end of the first member into the first aperture, through the first

> bore, and out of the second aperture,
>
> wherein the second member couples to the third member by inserting the first end of the second member into the third aperture, through the second bore, and out of the fourth aperture,
>
> wherein the second angle is in the range of about 0 degrees to about 90 degrees, and
>
> wherein the second bore axis is substantially perpendicular to the third longitudinal axis.

DISCUSSION

I. Motion for Leave

Fusion moves for leave to file a sur-reply (Doc. 70). "A sur-reply is appropriate when a party raises new issues or new evidence in a reply brief." *ML Liquidating Trust v. Mayer Hoffman McCann P.C.*, 2011 WL 10451619, at *1 (D. Ariz. Mar. 11, 2011). Courts "only allow for sur-replies in the most extraordinary of circumstances," as sur-replies "are generally discouraged as they usually are a strategic effort by the nonmoving party to have the last word on a matter." *Briggs v. Montgomery*, No. CV-18-02684-PHX-EJM, 2019 WL 13039282, at *2 (D. Ariz. Mar. 19, 2019) (citing *id.*). Here, Fusion alleges that the "requested Sur-Reply is necessary" to respond to "new evidence set forth for the first time in Extremity's Reply Claim Construction Brief . . . including an expert declaration submitted by Extremity and selected portions of Fusion's expert's deposition testimony that is mischaracterized by Extremity in its Reply Brief." (Doc. 70 at 2.)

In its Reply, Extremity repeatedly cites the declaration of a previously undisclosed expert, Mr. Eric Ledet. (*See* Doc. 68 at 6–8, 10–15.) Fusion had no opportunity to depose Mr. Ledet before the *Markman* hearing. Mr. Ledet's statements primarily concern how people of ordinary skill in the relevant art would understand specific claim terms. (*See* Doc. 68 at 6–8, 10–15.) Each of his statements, however, is responsive to matters raised in Defendant's Response or by Fusion's technical expert's testimony. The declaration does not advance any new arguments. *Sekera v. Allstate Ins. Co.*, 763 F. App'x 629, 632 (9th

Cir. 2019) ("The district court did not err in denying Sekera's request because Allstate did not introduce new arguments in its reply to warrant the sur-reply.") (cleaned up). Further, as the analysis below will indicate, Mr. Ledet's declaration had a di minimis effect on the Court's ultimate constructions. Thus, allowing Fusion to respond to Mr. Ledet's declaration would not be "helpful to the resolution" of the currently pending matters. *Liberty Corp. Cap. Ltd. v. Steigleman*, No. CV-19-05698-PHX-GMS, 2020 WL 2097776, at *1 (D. Ariz. May 1, 2020) (noting that a district court must consider whether a sur-reply would be helpful to resolve pending matters).

To the extent that Fusion's motion seeks leave to address mischaracterizations of "selected portions of Fusion's expert's deposition testimony," it is also denied. The Court had access to the relevant transcripts and considered them carefully. It did not unthinkingly embrace Extremity's characterizations in reaching its final constructions. Of particular importance here, Fusion had an opportunity to discuss these concerns at the *Markman* hearing. At that time, Fusion adequately explained its claim construction arguments and expressed its position on Mr. Ledet's declaration. After considering those positions and other arguments outlined in Defendant's Motion, Fusion does not allege the extraordinary circumstances that warrant leave to file a sur-reply. This result does not prejudice the parties. *Id.* (noting that a district court must consider prejudice to the nonmovant in determining whether to grant a motion for leave to file a sur-reply).

Accordingly, Defendant's Motion for Leave (Doc. 70) is denied.

II. Claim Construction

a. Legal Standard

Claim construction is the first step in patent infringement analysis. *See Markman v. Westview Instruments, Inc.,* 517 U.S. 370, 372–74 (1996). Its purpose is to "determin[e] the meaning and scope of the patent claims asserted to be infringed." *Markman v. Westview Instruments, Inc.*, 52 F.3d 967, 976 (Fed. Cir. 1995) (en banc), *aff'd* 517 U.S. 370 (1996). If a disputed claim term has a plain and ordinary meaning that needs no clarification or explanation, the Court need not adopt a construction beyond that plain meaning. *Clim-A-*

Tech Indus. Inc. v. Ebert, No. CV-15-00873-PHX-GMS, 2018 WL 1182549, at *2 (D. Ariz. Mar. 7, 2018) (citing *U.S. Surgical Corp. v. Ethicon, Inc.*, 103 F.3d 1554, 1568 (Fed. Cir. 1997)). The general rule is that the ordinary meaning of a claim term is the meaning the term would have to a person of ordinary skill in the art ("POSITA"), read "not only in the context of the particular claim in which the disputed term appears, but in the context of the entire patent." *Phillips v. AWH Corp.*, 415 F.3d 1303, 1313 (Fed. Cir. 2005). Claim construction is exclusively within the province of the Court. *Markman*, 517 U.S. at 372.

When construing claim terms, courts look first (and primarily) to intrinsic evidence, including the patent's claims, specification, and prosecution history. *Ericsson, Inc. v. D-Link Sys., Inc.,* 773 F.3d 1201, 1217 (Fed. Cir. 2014). The claims' language provides substantial guidance as to the meaning of the terms but must be read in light of the specification. *Phillips*, 415 F.3d at 1313 ("[T]he specification is always highly relevant to the claim construction analysis.") (internal punctuation omitted). Likewise, prosecution history, which "consists of the complete record of the proceedings before the [Patent Office] and includes the prior art cited during" the patent's examination "provides evidence of how the [Patent Office] and the inventor understood the patent." *Id.* at 1317. Courts also consider statements made during the prosecution of related patents. *See, e.g.*, *E.I. du Pont de Nemours & Co. v. Unifrax I LLC*, 921 F.3d 1060, 1068–70 (Fed. Cir. 2019) (citations omitted) (citing *Wang Labs., Inc. v. Am. Online, Inc.*, 197 F.3d 1377, 1383–84 (Fed. Cir. 1999)).

Extrinsic evidence, like expert testimony or dictionaries, may also be considered in claim construction. For example, expert testimony can help explain any relevant background or understand how relevant POSITAs would understand the terms at issue. *Phillips*, 415 F.3d at 1313. However, extrinsic evidence is generally viewed as less reliable than intrinsic evidence and, thus, is considered less "unlikely to result in a reliable interpretation of patent claim scope unless considered in the context of the intrinsic evidence." *Id*. at 1318–19.

b. Construction of Disputed Terms

i. Term One: "a third member comprising a third elongated body extending along a straight line from a first end to a second end along a third longitudinal axis."

Claims One and Twelve state that the 166 Patent has "a third member comprising a third elongated body extending along a straight line from a first end to a second end along a third longitudinal axis." (Doc. 60-2 at 33, c.15, 11:13); (Doc. 60-2 at 33, c.16, 24:26.) Extremity asks the Court to construe "extending along a straight line from a first end to a second end" to mean "wherein the [third] member extends along a straight line from a first end to a second end." (Doc. 60 at 11.) Fusion objects to this construction because it "would require the entire third member to extend along a straight line," when the claims' language only requires a "portion of the third member called the 'third elongated body' to extend along a straight line." (Doc. 63 at 15.)

First, the Court considers the claims' text. According to Claims One and Twelve, the "third elongated body" extends from "a first end" to "a second end." Under Extremity's construction, the distance between the "first end" and the "second end" is the entire length of the third member. Fusion notes that the claims' text does not explicitly define the distance between the ends. Contrary to Fusion's position, however, the text also fails to explicitly limit "a third elongated body" to any portion of the third member.

Next then, the Court turns to the specification. While "[t]he specification is the primary basis for claim construction and the best source for understanding a technical term in the proper context," it is not particularly useful in this instance. *Clim-A-Tech Indus. Inc. v. Ebert*, No. CV-15-00873-PHX-GMS, 2018 WL 1182549, at *3 (D. Ariz. Mar. 7, 2018). Figure 18 depicts a third member consisting of two primary sections—a hollow base and a screw-like end—and a longitudinal axis extending beyond the third member's edges. It does not label the third member (or any portion of the third member) as "a third elongated body."

Thus, the Court considers the relevant prosecution history. During the prosecution of U.S. Patent Application No. 15/884,048 ("048 Application"), an application to which the 166 Patent claims priority, Extremity made a disclaimer that limits Term One to its proposed construction. A disclaimer allows a court to deviate from the general rule that claim terms should be given their ordinary meaning (as understood by a POSITA) when "the patentee disavows [or "disclaims"] the full scope of a claim term either in the specification or during prosecution." *Thorner v. Sony Comput. Entm't Am. LLC*, 669 F.3d 1362, 1365 (Fed. Cir. 2012). Importantly, "prosecution disclaimer may arise from disavowals made during the prosecution of ancestor patent applications." *Ormco*, 498 F.3d at 1314 (citing *Raytek Corp.,* 334 F.3d at 1333).

The 166 Patent is a continuation of the 048 Application, which depicted the following device:

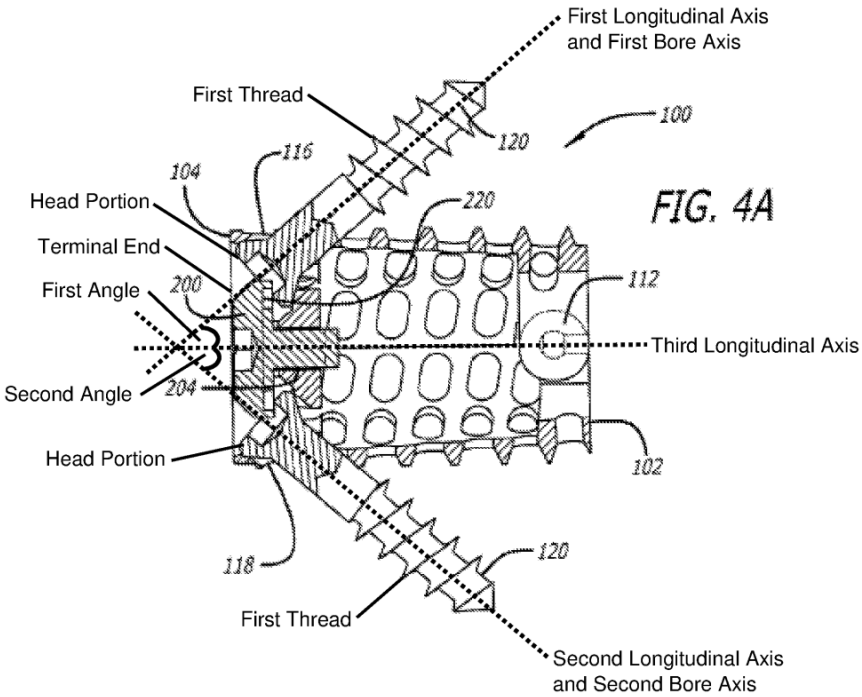

During the 048 Application's prosecution, an Examiner initially rejected Extremity's second claim as anticipated by U.S. Patent Publication No. 2006/0149257 ("Orbay Patent"). In relevant part, Claim Two stated that the device depicted in Figure 4A

had "a third member (implant 100) comprising a third elongated body extending from a first end (trailing end 104) to a second end (leading end 102) along a third longitudinal axis (see Fig. 4A inset) . . . ." (Doc. 60-3 at 6.) The Examiner found this language was anticipated by the Orbay Patent, which also disclosed "a third member (device 10) comprising a third elongated body extending from a first end (end adjacent hole 22) to a second end (end adjacent portion 46) along a third longitudinal axis. . . ." (Doc. 60 at 12 (citing Doc. 60-3 at 10).) Device 10 is depicted below:

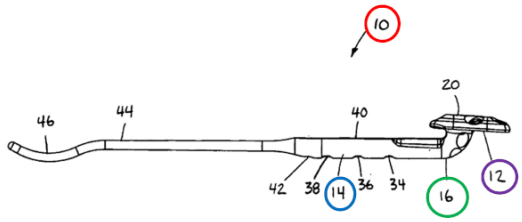

FIG. 1

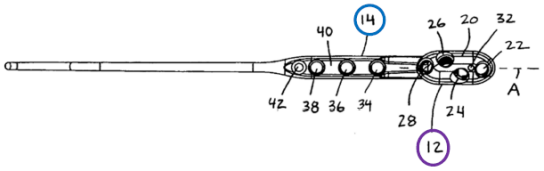

FIG. 2

In light of the Examiner's rejection, Extremity amended Claim Two to reflect the language it requests here: "a third member comprising a third elongated body ***extending along a straight line*** from a first end to a second end along a third longitudinal axis. . . ." (*See* Doc. 60 at 10 (citing Doc. 60-5 at 3) (emphasis in the original).) The remarks accompanying Extremity's proposed amendment specifically distinguished the device depicted in Figure 4A from the Orbay Patent by noting that "Device 10 disclosed in Orbay does not extend along a straight line from a first end to a second end," and, instead, "bends along [the] neck portion." (Doc. 60-5 at 8.) The Examiner did not sustain the initial rejection.

As an initial matter, "[e]xplicit statements made by a patent applicant during

prosecution to distinguish a claimed invention over prior art may serve to narrow the scope of a claim." *Omega Eng'g, Inc, v. Raytek Corp.*, 334 F.3d 1314, 1324 (Fed. Cir. 2003) (citing *Spectrum Int'l, Inc. v. Sterilite Corp.,* 164 F.3d 1372, 1378 (Fed. Cir. 1998)). And when "the application of prosecution disclaimer involves statements from prosecution of a familial patent relating to the same subject matter as the claim language at issue in the patent being construed, those statements in the familial application are relevant in construing the claims at issue." *Ormco*, 498 F.3d at 1314.

The amended language in Claim Two is identical to the language in Term One. (*Compare* Doc. 60-5 at 2 *with* Doc. 60 at 10.) And, like the third member disclosed in the 166 Patent, the third member disclosed in the 048 Application is entirely straight. (Doc. 60-3 at 9.) Of particular relevance here is that Claim Two's language explicitly described the third member's "third elongated body" as extending "from a first end (trailing end 104) to a second end (leading end 102)." According to the labeling on Figure 4A, the distance between those points is the entire length of the third member, not any particular portion. By noting that a "third elongated body" extended "along a straight line," Extremity limited the scope of the phrase "a third elongated body extending along a straight line from a first end to a second end" to its proposed construction for Term One, i.e., "wherein the [third] member extends along a straight line from a first end to a second end."

Nevertheless, Fusion argues that the Court should not adopt Extremity's construction because the figures from the Orbay patent "clearly show an intramedullary nail [] that extends along a straight line for a portion of the nail (third elongated body)." (Doc. 63 at 16.) However, it is unclear how this point undermines Extremity's proposed construction. By amending Claim Two to include the phrase "extending along a straight line," Extremity differentiated the third elongated body on the Orbay device, which was only partially straight, from the third elongated body disclosed in Figure 4A, which was entirely straight.

Accordingly, the Court adopts Extremity's construction of Term One.

ii. Term Two: "terminal end"

The phrase "terminal end" appears in Claims One and Twelve as part of a larger clause: "wherein the third member comprises a first aperture at a terminal end of the first end of the third elongated body." (Doc. 60-2 at 33, c.15, 13:14); (Doc. 60-2 at 33, c.16, 26:28 (emphasis added).) Extremity asks the Court to construe "terminal end" to mean "the very tip" because of an alleged disclaimer it made during the prosecution of another patent application to which the 166 Patent claims priority, U.S. Patent Application No. 12/658,680 ("680 Application"). The 680 Application included Claims One and Fifty-One, which described "a second screw member" that "includes a second elongated body having first and second ends," comprising in part "a first aperture at a terminal end of the second end of the second elongated body." (Doc. 60-6 at 2, 11.)

Initial Rejection of Terminal End. In rejecting these claims, the Examiner noted the specification did not comply with the written description requirement under 35 U.S.C. § 112, because it failed to support "a terminal end," among other claim terms. (Doc. 60-6 at 19). Extremity responded by explaining that "a 'terminal end' is 'disclosed as end 1120 shown in Figure 11 and described in paragraph [0060]." (*Id.*).

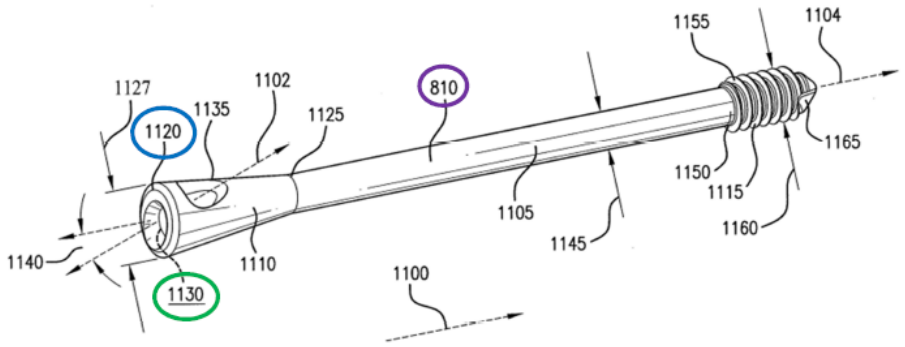

FIG. 11

In the description accompanying Figure 11, Extremity identified a "tapered portion 1110" that is "generally tubular in shape and tapers from end 1120 to end 1125." (Doc.

60-8 at 27.) It further noted that "first end 1120 has a tapered aperture 1130, which traverses tapered portion 1110 along axis 1102, which causes tapered aperture 1130 to emanate from surface 1135." (*Id.*) The Examiner withdrew the rejection.

Chang Patent. At another point in the prosecution, "the Examiner cited U.S. Patent Publication No. 2009/0240252 ("Chang Patent") as a prior art reference that disclosed the claimed inventions." (Doc. 60 at 16 (citing Doc. 60-7 at 8–13.).) Figure 5 depicts the Chang Patent:

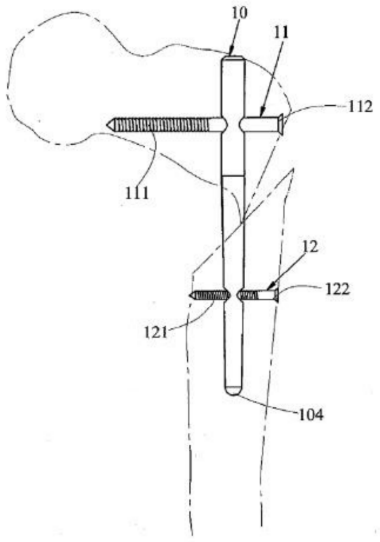

FIG. 5

To distinguish the 680 Application from the Chang Patent, Extremity noted that Figure 5 only disclosed holes "along the shaft of the nail." (Doc. 60 at 17 (citing Doc. 60-6 at 20).) The Chang Patent did "not discuss or disclose a structure having an aperture at a terminal end of the nail." (Doc. 60 at 17 (citing Doc. 60-6 at 20–21).)

Analysis. Neither the initial rejection nor the Chang Patent disclaimers support construing "terminal end" as "the very tip." The Examiner's initial rejection demonstrates that "1120" is the member's terminal end with "tapered aperture 1130." But Extremity never used the words "the very tip" to describe the portions of the device labeled at 1120

and 1130. Further, while Extremity's description of the Chang Patent also supports its position that 1120 is the member's "terminal end" with a tapered aperture, it also did not describe 1120 or 1130 as the member's "very tip." Together, the initial rejection and the Chang Patent suggest that portion 1120 is the device's "terminal end," but they do not support calling that end "the very tip." As Fusion notes, "the word 'tip'. . . appears nowhere in the file history statements on which Extremity relies," (Doc. 63 at 13), and a POSITA might understand "the very tip" to mean "the pointed end that is inserted into the bone first," (Doc. 63 at 14).

After reviewing the parties' briefings and representations from the *Markman* hearing, the Court is persuaded that a POSITA would understand that the 166 Patent's "terminal end" is the open end of the third member's hollow base.

Accordingly, the Court rejects Extremity's proposed construction and declines to construe Term Two.

iii. Term Three: a "first member further comprising a first thread having a first thread height" and a "second member further comprising a first thread having a first thread height."

Claims One and Twelve describe a "first member further comprising a first thread having a first thread height" and a "second member further comprising a first thread having a first thread height." (Doc. 60-2 at 33, c.15, 1:3, 8:9); (Doc. 60-2 at 33, c.16, 12:14, 19:21.) Fusion asks the Court to construe these terms as "the first thread height is the same for the first thread of the first member and the first thread of the second member." Extremity opposes this construction as contrary to "accepted claim drafting principles." (Doc. 60 at 18.)

The Court starts with the claims' text. Generally, "the introduction of a new element is accomplished through the use of an indefinite article," such as "a" or "an," and "not through the use of a definite article," such as "the." *Tuna Processors, Inc. v. Haw. Int'l Seafood, Inc.*, 327 F. App'x 204, 210 (Fed. Cir. 2009). For example, in *Tuna Processors*, a claim described a multi-step process for curing tuna fish. The first step included "passing

the produced smoke through a filter," the second step required "cooling the smoke passed through the filter," and the third step involved smoking the tuna by exposing it "to the smoke cooled to between 0° and 5° C." *Id.* at 206. A party in that case alleged that "the smoke" mentioned in the third step was distinct from "the smoke" mentioned in previous steps. *Id.* at 210. However, the Federal Circuit rejected that construction by noting that "the definitive article THE is used to refer to an ELEMENT which has been established earlier in a claim." *Id.* (quoting Robert C. Faber, *Faber on Mechanics of Patent Claim Drafting*, App. D–1 (6th ed. 2008) (capitalization in the original)). Thus, "the smoke" in step three was the same as "the smoke" in steps one and two. Under this general drafting principle, the indefinite articles preceding "a first thread" and "a first thread height" suggest that the terms refer to distinct threads and thread heights even though their wording is identical.

However, Fusion suggests that other drafting principles cut against this conclusion. For example, "claim terms are normally used consistently throughout the patent" so that "the usage of a term in one claim can often illuminate the meaning of the same term in other claims." *Phillips v. AWH Corp.*, 415 F.3d 1303, 1314 (Fed. Cir. 2005). And, as Fusion notes, throughout Claims One and Twelve, "[t]he patent owner chose to use terms like first, second, and third to refer to different structures or components, such as first member, second member and third members." (Doc. 63 at 13.) Thus, according to Fusion, the patent owner would similarly refer to "first" and "second" thread heights if the thread heights were different. Fusion further claims that Figure 18, "which shows both screws with the same thread height," also supports this conclusion. (Doc. 63 at 13.)

On balance, Fusion's arguments are unpersuasive for three reasons. First, "no portion of the '166 Patent['s] [specification] indicates that the thread heights of the two members are the same." (Doc. 68 at 8–9.) Second, "it is improper to read limitations from a preferred embodiment described in the specification—even if it is the only embodiment—into the claims absent a clear indication in the intrinsic record that the patentee intended the claims to be so limited." *Liebel-Flarsheim Co. v. Medrad, Inc.,* 358

F.3d 898, 913 (Fed. Cir. 2004). Fusion points to no such indication.

Third, and most importantly, Extremity's use of indefinite and definite articles throughout the 166 Patent's specification appears consistent with the drafting principle mentioned above. Wherever an assembly component is modified by an ordinal term in Claims One and Twelve, the text introduces the component with indefinite articles, such as "a first member," (Doc. 60-2 at 32, 14:63), "a second aperture," (Doc. 60-2 at 33, 15:17), or "a third longitudinal axis," (Doc. 60-2 at 33, 15:13). When the assembly component is mentioned a second time, it is always referenced with a definite article, such as the "the first member," (Doc. 60-2 at 32, 14:65), "the second aperture," (Doc. 60-2 at 32, 15:20), or "the third longitudinal axis," (Doc. 60-2 at 32, 14:21).

Accordingly, the Court rejects Fusion's proposed construction for Term Three.

iv. Indefiniteness

The parties do not seek any further claim construction. Instead, Fusion argues that the remaining terms are indefinite. The Patent Act requires a patent specification to "conclude with one or more claims particularly pointing out and distinctly claiming the subject matter which the applicant regards as [the] invention." 35 U.S.C. § 112; *Nautilus, Inc. v. Biosig Instruments, Inc.*, 572 U.S. 898, 901 (2014). Thus, "a patent is invalid for indefiniteness if its claims, read in light of the specification delineating the patent, and the prosecution history, fail to inform, with reasonable certainty, those skilled in the art about the scope of the invention." *Nautilus*, 572 U.S. at 901. "'Reasonable certainty' does not require 'absolute or mathematical precision.'" *BASF Corp. v. Johnson Matthey Inc.*, 875 F.3d 1360, 1365 (Fed. Cir. 2017). Nevertheless, "[a] lack of definiteness renders invalid 'the patent or any claim in suit,'" *Nautilus*, 572 U.S. at 902, and a patent challenger has the "burden of proving indefiniteness by clear and convincing evidence," *United Access Techs., LLC v. AT&T Corp.*, 757 F. App'x 960, 9699 (Fed. Cir. 2019).

1. Terms Four and Five: "wherein the first angle is in the range of about 0 degrees to about 90 degrees"/ "wherein the second angle is in the range of about 0 degrees to about 90 degrees."

Claim One contains the term "wherein the first angle is in the range of about 0 degrees to about 90 degrees." (Doc. 60-2 at 33, c.15, 38:39.) Claims One and Twelve contain the term "wherein the second angle is in the range of about 0 degrees to about 90 degrees." (Doc. 60-2 at 33, c.15, 41:42); (Doc. 60-2 at 33, c.16, 53:54.) Fusion alleges these terms are indefinite because "a range of 'about 0 degrees to about 90 degrees' for angles between two axes [] is too broad of a range to adequately describe the invention." (Doc. 63 at 9.) Fusion also alleges that because the angles are defined by the two axes they intersect, the claims could refer to any one of four angles, and, thus, "there is no way to tell which angle is referred to in the claims." (*Id.* (noting that the first angle is defined by the "third longitudinal axis and the first bore axis," and the second angle is defined by the "third longitudinal axis and the second bore axis.").) The former allegation is easily refuted by Figure 18, which clearly labels the relevant angles at 1808 and 1812, respectively. There is thus no legitimate confusion about which angles are referred to in Claims One or Twelve. The latter allegation, however, requires more consideration.

Fusion's technical expert testified that if the first or second angles were oriented at near 0 degrees, they would be parallel with the third member and, thus, would not serve any useful purpose. (Doc. 68-3 at 19, 1:2 ("[A]t 0 degrees nothing much is happening. All you have is a nail with no screws.").) He further testified that if the first or second angles were at or near 5 degrees, the device would also not serve a useful purpose because "if you try to compress something at a very acute angle all you're really doing is creating some tilting or rotation of the bone fragment and not really good perpendicular compression bone on bone." (Doc. 68-3 at 19, 11:12 ("[The assembly] would not be an effective capture of any bone at five degrees.").) Likewise, Fusion's expert noted that if the first member were positioned at 90 degrees, "the body of the screw would be extremely close to the outer surface of the bone and not provide proper quality fracture fixation." (Doc. 63 at 10); (Doc. 68-3 at 21, 8:9 ("[I]t's possible you could use it at 90 degrees, but you certainly wouldn't").) According to Fusion, these observations provide clear and convincing evidence that the Terms are indefinite because for "a person skilled in the art, the claimed

value of near 0 degrees and near 90 degrees would have no practical use or significance for the device to perform as intended." (Doc. 63 at 10.)

Even accepting these observations, the Terms are not indefinite. Ultimately, the ranges are expressed in terms of degree, which have "long been found definite where [they] provided enough certainty to one of skill in the art when read in the context of the invention," *Interval Licensing LLC v. AOL, Inc.*, 766 F.3d 1364, 1370 (Fed. Cir. 2014), and provide "some standard for measuring that degree," *Advanced Aerospace Techs., Inc. v. United States*, 124 Fed. Cl. 282, 291 (2015). Here, Fusion's expert admits that in the context of the assembly, a device for facilitating healing after bone fractures, a POSITA would "have a very good idea of what the angle of the projected screw should be for that particular nail and the particular fracture pattern." (Doc. 68-3 at 18, 1:3.) And the standard for measuring the degree of that angle is "about 0 to 90 degrees," which "provide[s] objective boundaries for those of skill in the art." *Liberty Ammunition, Inc. v. United States*, 835 F.3d 1388, 1396 (Fed. Cir. 2016).

Further, the word "about" does not render the Terms indefinite. Although "'about' does not have a universal meaning in patent claims," *Pall Corp. v. Micron Separations, Inc.*, 66 F.3d 1211, 1217 (Fed. Cir. 1995), precise limits need not "always be attached to the term" because its "usage can usually be understood in light of the technology embodied in the invention," "the context," and "the precision or significance of the measurements used." *Zoltek Corp. v. United States*, 48 Fed. Cl. 290, 300 (2000). In this context, the 166 Patent's specification notes that the assembly is useful in many cases because it allows surgeons to adjust the first and second angles to secure specific fractures. (*See, e.g.*, Doc. 60-2 at 13:45–50 ("It should be appreciated that fixed angles 1808 and 1812 may be any angle less than 90 degrees to allow a surgeon the flexibility of determining the angle for internal fixation of bones in the human body.").) While the angle measurement a surgeon uses in one operation will be precise and significant in the context of that fracture, it might not be relevant in any future operations. Thus, Extremity's use of "about 0 degrees to about 90 degrees" is appropriate here because the word "about" specifically "avoids a strict

numerical boundary to the specified parameter" to provide surgeons with flexibility. *Pall*, 66 F.3d at 1217 (Fed. Cir. 1995).

Accordingly, Fusion has not provided clear and convincing evidence that Terms Four and Five are indefinite, and the Court will not construe them.

2. Term Six: "wherein the second bore axis is substantially perpendicular to the third longitudinal axis."

Claims One and Twelve state, "wherein the second bore axis is substantially perpendicular to the third longitudinal axis." (Doc. 60-2 at 33, c.15, 43:44); (Doc. 60-2 at 33, c.16, 53:54.) Fusion asks the Court to find the term "substantially perpendicular" indefinite. Like the word "about," the word "substantially" is a term of degree, which, in this context, is used to "avoid a strict numerical boundary to the specified parameter." *Ecolab, Inc. v. Envirochem, Inc.,* 264 F.3d 1358, 1367 (Fed. Cir. 2001); *see also Cordis Corp. v. Medtronic Ave*, 339 F.3d 1352, 1360 (Fed. Cir. 2003) ("The patents do not set out any numerical standard by which to determine whether the thickness of the wall surface is 'substantially uniform.' The term 'substantially,' as used in this context, denotes approximation."). The word "perpendicular" means "at an angle of 90° to a horizontal line or surface." *Perpendicular*, Cambridge Dictionary, https://dictionary.cambridge.org/us/dictionary/english/perpendicular (last visited June 30, 2023). Thus, the "phrase 'substantially perpendicular' envisions some amount of deviation from" 90 degrees. *Parker Compound Bows, Inc. v. Hunter's Mfg. Co.*, Inc., No. 5:14CV00004, 2016 WL 617464, at *19 (W.D. Va. Feb. 12, 2016) (quoting *Anchor Wall Sys., Inc. v. Rockwood Retaining Walls, Inc.*, 340 F.3d 1298, 1311 (Fed. Cir. 2003)).

As mentioned above, the assembly was designed to give surgeons flexibility when positioning the first and second members to secure fractures. (Doc. 60-2 at 13, 45:50.) Because a surgeon could position the second member at numerous angles, the second bore axis and third longitudinal axis might intersect in a manner that cannot be described as completely "perpendicular." The axes would only be completely perpendicular if the

second member were placed into the second aperture at a 90-degree angle. However, by including the word "substantially," Extremity indicated to POSITAs that the lines might intersect in more variable ways. *Parker Compound Bows, Inc. v. Hunter's Mfg. Co., Inc.*, No. 5:14CV00004, 2016 WL 617464, at *19 (W.D. Va. Feb. 12, 2016) ("Here, the patentee plainly used the word 'substantially' to describe the relationship between two lines—i.e., their perpendicularity or parallelity, as the case may be—in a way that does not require exactness.").

Extremity also provided objective boundaries for understanding the phrase "substantial perpendicularity." As mentioned above, the assembly allows surgeons to position the second member through the second aperture at various angles, depending on the nature of a given fracture. The angle at which a surgeon inserts the second member into the second aperture determines the position of the second bore axis. Thus, the degree to which the second bore axis and the third longitudinal axis intersect is also determined by the angle at which a surgeon inserts the second member, which is limited to "the range of about 0 degrees to about 90 degrees." Thus, the degree of perpendicularity is also limited to this range, and the measurement is not "purely subjective." *Niazi Licensing Corp. v. St. Jude Med. S.C., Inc.*, 30 F.4th 1339, 1348 (Fed. Cir. 2022).

Accordingly, "substantial perpendicularity" is not indefinite.

3. Term Seven: "wherein there are no threads adjacent to the second aperture on the exterior surface of the third member"

Finally, Fusion asks the Court to find Term Seven—"wherein there are no threads adjacent to the second aperture on the exterior surface of the third member"—indefinite. (Doc. 60-2 at 33, c.15, 19:21); (Doc. 60-2 at 33, c.16, 33:35.) Fusion alleges that the word "adjacent," like the words "about" and "substantially perpendicular," is a subjective term of degree. (Doc. 63 at 12.) Specifically, it alleges that a POSITA "would not be able to determine just how near the threads would have to be to the second aperture to fall within the scope of this phrase." (*Id.*) Fusion further notes that it is also "unclear if there are no threads inside the second aperture, which is on the exterior surface of the third member, or

if there are no threads on the portion of the exterior surface of the third member that is adjacent to the second aperture." (*Id.*)

To start, courts routinely decline to construe "adjacent" in patent claims and afford the word its conventional definition. *Webasto Thermo & Comfort N. Am., Inc. v. Bestop Inc.*, No. 2:16-cv- 3456-PDB-RSW, 2018 U.S. Dist. LEXIS 218799, at *52-53 (E.D. Mich. Nov. 29, 2018) (citing *GeoDynamics, Inc. v. DynaEnergetics US, Inc.*, No. 2:15-CV-1546-RSP, 2016 U.S. Dist. LEXIS 147143, 2016 WL 6217181, at *6 (E.D. Tex. Oct. 25, 2016); *Wise v. Techtronic Indus. Co.*, No. 8:10-3005-HMH, 2011 U.S. Dist. LEXIS 170195, at *16 (D.S.C. Oct. 3, 2011) (citing *Phillips v. AWH Corp.*, 415 F.3d 1303, 1314 (Fed. Cir. 2005)). Fusion's expert offered a definition that aligns with these decisions by testifying that "adjacent to" means "alongside or tangent to." (Doc. 68-3 at 25, 13:14.) This definition is sufficient to inform "with reasonable certainty, those skilled in the art about the scope of the invention," *Nautilus*, 572 U.S. at 901, although it does not define the absence of threads with "absolute or mathematical precision." *BASF Corp. v. Johnson Matthey Inc.*, 875 F.3d 1360, 1365 (Fed. Cir. 2017).

Fusion's argument that "there are two possible locations where there could be no threads" does not change this conclusion. (Doc. 68 at 15.) Under the definition offered by its expert, Term Seven cannot plausibly suggest that "there are no threads inside the second aperture." Put simply, "alongside or tangent to" means "next to" not "inside of." Further, the 166 Patent's specification unambiguously states that the third member's hollow base "has a smooth exterior." (Doc. 60-2 at 32, 13, 3537.) Thus, there is no legitimate confusion about where there are no threads.

Accordingly, the Court will not find Term Seven indefinite and will not construe "adjacent to."

CONCLUSION

For the preceding reasons, the claims are construed under *Markman v. Westview Instruments, Inc.*, 517 U.S. 370 (1996), as specified below.

IT IS HERBY ORDERED that "a third member comprising a third elongated body

extending along a straight line from a first end to a second end along a third longitudinal axis" is construed as "wherein the [third] member extends along a straight line from a first end to a second end."

IT IS FURTHER ORDERED that no construction is necessary for any other terms, and they will be understood according to their plain and ordinary meanings.

IT IS FURTHER ORDERED that Defendant's Motion for Leave to File Sur-Reply Regarding Claim Construction (Doc. 70) is **DENIED.**

Dated this 7th day of July, 2023.

G. Murray Snow
Chief United States District Judge