UNITED STATES PATENT AND TRADEMARK OFFICE

BEFORE THE PATENT TRIAL AND APPEAL BOARD

FUSION ORTHOPEDICS, LLC,
Petitioner,

v.

EXTREMITY MEDICAL, LLC,
Patent Owner.

Case IPR2023-00894
U.S. Patent No. 11,298,166

PATENT OWNER'S CONTINGENT MOTION TO AMEND UNDER 35 U.S.C. § 316(d) AND 37 C.F.R § 42.121

PRELIMINARY GUIDANCE SOUGHT PURSUANT TO 84 FED. REG. 9497

Table of Contents

Page

I. Introduction 1

II. Statement of Relief Requested 2

III. The Substitute Claims Meet All the Requirements of 37 C.F.R. § 42.121 2

IV. The Original Non-Provisional Application and its Parent Support the Limitations Added to Proposed Substitute Claims 16-30 4

V. Level of Ordinary Skill in the Art 15

VI. Claim Construction 15

VII. The Proposed Substitute Claims Are Patentable Over the Prior Art 15

- **A.** None of the References, Alone or in Combination, Teach Having the Exterior Surface of the Head of the First Member Abut the Interior Surface of the First Bore of the Third Member at the Second Aperture 16
  - **1.** Cognet (Ex. 1004) Does Not Disclose Having the Exterior Surface of the Head of the First Member Abut the Interior Surface of the First Bore of the Third Member at the Second Aperture 19
  - **2.** Brumfield (Ex. 1006) Does Not Disclose Having the Exterior Surface of the Head of the First Member Abut the Interior Surface of the First Bore of the Third Member at the Second Aperture 20
  - **3.** Ferrante (Ex. 1007) Does Not Disclose Having the Exterior Surface of the Head of the First Member Abut the Interior Surface of the First Bore of the Third Member at the Second Aperture 21
  - **4.** Simon (Ex. 1008) Does Not Disclose a First Member Having a Head, and Therefore Does Not Disclose Having the Exterior Surface of a Head of a First Member Abut the Interior Surface of the First Bore of the Third Member at the Second Aperture 22
  - **5.** Leu (Ex. 1009) Does Not Disclose Having the Exterior Surface of the Head of the First Member Abut the Interior

Surface of the First Bore of the Third Member at the Second Aperture 23

VIII. Conclusion 25

Table of Authorities

Page(s)

Cases

In re Aqua Products, Inc.,
872 F.3d 1290 (Fed. Cir. 2017).....2, 15

MasterImage 3D, Inc. v. RealD Inc.,
IPR2015-00040, Paper 42 (PTAB July 15, 2015) 15, 16

Nike, Inc. v. Adidas AG,
812 F. 3d 1326 (Fed. Cir. Feb. 11, 2016) 16

VMWare, Inc. v. Clouding Corp.,
IPR2014-01292, Paper 23 (PTAB April 7, 2015) 16

Statutes

35 U.S.C. § 112 4

35 U.S.C. § 316(d) 1, 25

Other Authorities

37 C.F.R. § 42.11 16

37 C.F.R § 42.121 .....1, 2, 25

37 C.F.R. § 42.121(a)(2)(i) 3

37 C.F.R. § 42.121(a)(2)(ii) 2, 4

37 C.F.R. § 42.121(a)(3) 4

84 Fed. Reg. 9497 (March 15, 2019) 1, 25

List of Exhibits

Exhibit No.	Exhibit Description
2001	Declaration of Michael J. Zinna in Support of Patent Owner's Motion For Pro Hac Vice Admission Pursuant To 37 C.F.R. § 42.10(c)
2002	Complaint from Parallel District Court Case: *Extremity Medical, LLC vs. Fusion Orthopedics*, LLC, Case No. 2:22-cv-00723-PHX-GMS (D. Ariz.) (ECF 1)
2003	Case Management Order from Parallel District Court Case (ECF 49)
2004	July 10, 2023 Scheduling Order from Parallel District Court Case (ECF 74)
2005	July 28, 2023 Scheduling Order from Parallel District Court Case (ECF 76)
2006	Patent Owner's infringement contentions served in the Parallel District Court Case
2007	Petitioner's invalidity contentions served in the Parallel District Court Case and Exhibits A2 and A6 thereto
2008	*Markman* Order issued by the Court in the Parallel District Court Case (ECF 73)
2009	Printout from www.docketnavigator.com
2010	July 15, 2021 "List of References cited by applicant and considered by examiner" for U.S. Patent Application No. 17/323,923
2011	Selected Pages of the Transcript from the June 7, 2023 Deposition of Leonel Dominguez
2012	Declaration of Dr. Eric H. Ledet
2013	Transcript from the January 18, 2024 Deposition of Leonel Dominguez

Exhibit No.	Exhibit Description
2014	U.S. Patent Publication No. 2009/0240252 ("Chang")
2015	Claim Construction Order issued in Extremity Medical, LLC vs. Fusion Orthopedics, LLC, Case No. 2:22-cv-00723-PHX-GMS (D. Ariz.)),
2016	Transcript from the June 7, 2023 Deposition of Leonel Dominguez
2017	U.S. Patent No. 10,357,299
2018	Printout from the website https://www.machinistguides.com/counterbores-all-about/
2019	Reserved
2020	Prosecution History for U.S. Patent Application No. 17/323,923
2021	Prosecution History for U.S. Patent Application No. 12/658,680

I. Introduction

Pursuant to 35 U.S.C. § 316(d) and 37 C.F.R. § 42.121, Patent Owner Extremity Medical, LLC ("Patent Owner") respectfully submits this contingent Motion to Amend ("Motion") to substitute challenged Claims 1-15 of U.S. Patent No. 11,298,166 ("the '166 Patent") for proposed Claims 16-30, contingent on the outcome of this *inter partes* review. In the event the Patent Trial and Appeal Board ("Board") finds one or more of Claims 1-15 unpatentable, Patent Owner respectfully requests that the Board grant this Motion and issue the corresponding substitute Claims 16-30 presented herein. On January 25, 2024, the Board authorized Patent Owner to file this Motion. Paper 21.

Patent Owner also requests preliminary guidance from the Board on this Motion. *See Notice Regarding a New Pilot Program Concerning Motion to Amend*, 84 Fed. Reg. 9497 (March 15, 2019) ("MTA Pilot Program").

As evident from this Motion and the accompanying declaration of Dr. Eric H. Ledet (Exhibit 2012), the Motion and the substitute claims meet all of the requirements of 37 C.F.R § 42.121: (1) the contingent amendment is responsive to one or more grounds of alleged unpatentability involved in this proceeding, (2) the amendment does not seek to enlarge the scope of the claims or introduce new subject matter, (3) the amendment only proposes 15 substitute claims for the 15 challenged claims, Claims 1-15, and (4) the Motion shows the changes sought and

the support in the original disclosure of the patent and in an earlier-filed disclosure for each of the substitute claims.

On November 17, 2023, the Board issued a Decision finding Petitioner met its burden to show a reasonable likelihood that Claims 1-15 of the ’166 Patent are unpatentable. *See* Paper 15 at 25, 35. Although Patent Owner does not bear the burden of either persuasion or production regarding the patentability of the amended claims as a condition of allowance, *see In re Aqua Products, Inc.*, 872 F.3d 1290, 1296 (Fed. Cir. 2017), the instant Motion and supporting declaration of Dr. Eric H. Ledet demonstrate that the proposed amended claims are patentable over the references at issue in this proceeding.

II. Statement of Relief Requested

To the extent the Board finds one or more of original Claims 1-15 unpatentable in this proceeding, Patent Owner respectfully requests the Board to grant this Motion to Amend with respect to the corresponding substitute claims presented herein. The Board should not consider this Motion if it finds all of Claims 1-15 to be patentable.

III. The Substitute Claims Meet All the Requirements of 37 C.F.R. § 42.121

As shown in the attached Claims Appendix, proposed substitute Claims 16-30 retain all the features of original Claims 1-15, respectively, and do not enlarge the scope of the claims in any way. *See* 37 C.F.R. § 42.121(a)(2)(ii). Rather, the

contingent amendments add only narrowing features. Specifically, substitute independent Claim 16 adds the following limitations to original independent Claim 1: (1) the head portion of the first member comprising a head having an exterior surface; (2) the first bore of the third member comprising an interior surface at the second aperture; and (3) wherein the exterior surface of the head of the first member abuts the interior surface of the first bore at the second aperture. Substitute independent Claim 27 adds similar limitations to original independent Claim 12. Minor changes were made to the original dependent claims, Claims 2-11 and 13-15 to update claim dependencies and for consistency with the amendments made to the substitute independent claims.

The proposed substitute independent claims are responsive to one or more grounds of unpatentability at issue in this proceeding. *See* 37 C.F.R. § 42.121(a)(2)(i). Specifically, Petitioner in this proceeding has contended that the asserted prior art references disclose aspects of original Claims 1 and 12, which this Motion conditionally seeks to amend. *Compare* Petition, Paper No. 1 at 8-63 with Claims Appendix, *infra*.

Patent Owner proposes only one substitute claim for each challenged claim: substitute Claims 16-30 for original Claims 1-15. The proposed substitute claims therefore fit the "presumption . . . that only one substitute claim would be needed

to replace each challenged claim," and this Motion presents a reasonable number of substitute claims. 37 C.F.R. § 42.121(a)(3).

As demonstrated below, the proposed substitute claims are supported by the original non-provisional patent application that led to the '166 Patent as well as the patent application to which that application claims priority, so it does not introduce any new subject matter. *See* 37 C.F.R. § 42.121(a)(2)(ii).

IV. The Original Non-Provisional Application and its Parent Support the Limitations Added to Proposed Substitute Claims 16-30

The '166 Patent issued from U.S. Patent Application No. 17/323,923 ("Application 17/323,923"), which claims priority to U.S. Patent Application No. 12/658,680 ("Application 12/658,680"), filed February 11, 2010.

For purposes of this Motion, Patent Owner identifies the below portions of Application 17/323,923 (Exhibit 2020) and Application 12/658,680 (Exhibit 2021) that provide written description support pursuant to 35 U.S.C. § 112 for proposed substitute Claims 16-30. As demonstrated below and in the accompanying declaration of Dr. Ledet (Exhibit 2012), one of ordinary skill in the art would have understood based on the disclosures of Application 17/323,923 and Application 12/658,680 that the inventors of the '166 Patent possessed the substitute claims' assembly for bone fusion at the time of each of those applications. *See* Ex. 2012 at ¶¶ 85-98.

Substitute Claim Text[1]	Support in Application 17/323,923[2]	Support in Application 12/658,680[3]
Substitute Claim 16		
16. An assembly for bone fusion, comprising:	Exhibit 2020, p. 17-20, 34-38, 43-45; Figs. 9-11, 18.	Exhibit 2021, p. 21-27, 35-37, 40-54; Figs. 9-11, 18.
a first member comprising a first elongated body extending from a first end to a second end along a first longitudinal axis, wherein the first member comprises a shaft portion having an external surface and a head portion comprising a head having an exterior surface, said first member further comprising a first	Exhibit 2020, p. 17-20, 34-38, 43-45; Figs. 9-11, 18. 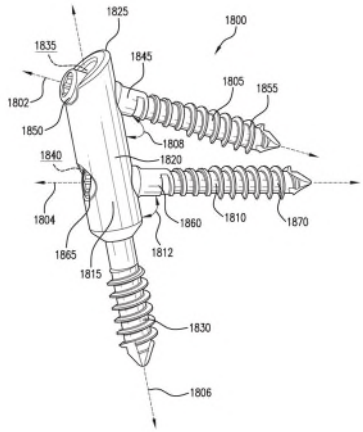 FIG. 18	Exhibit 2021, p. 21-27, 35-37, 40-54; Figs. 9-11, 18. 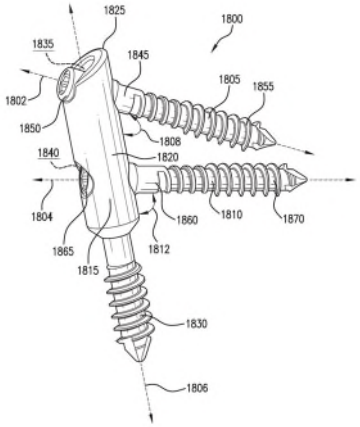 FIG. 18

[1] Deletions from the original claims are shown by red brackets surrounding red text, and additions are shown in blue underlining.

[2] The citations in this column are made to Exhibit 2020, which is the publicly available file history of Application 17/323,923. The citations are to the exhibit page numbers provided by Patent Owner.

[3] The citations in this column are made to Exhibit 2021, which is the publicly available file history of Application 12/658,680. The citations are to the exhibit page numbers provided by Patent Owner.

Substitute Claim Text[1]	Support in Application 17/323,923[2]	Support in Application 12/658,680[3]
thread having a first thread height extending radially outward from the external surface of said shaft portion;		
a second member comprising a second elongated body extending from a first end to a second end along a second longitudinal axis, wherein the second member comprises a shaft having an external surface, said second member further comprising a first thread having a first thread height extending radially outward from the external surface of said shaft;	Exhibit 2020, p. 17-20, 34-38, 43-45; Figs. 9-11, 18.	Exhibit 2021, p. 21-27, 35-37, 40-54; Figs. 9-11, 18.
a third member comprising a third elongated body extending along a straight line from a first end to a second end along a third longitudinal axis, wherein the third member comprises a first aperture at a terminal end of the first end of the third elongated body, and a first bore extending	Exhibit 2020, p. 17-20, 34-38, 43-45; Figs. 9-11, 18.	Exhibit 2021, p. 21-27, 35-37, 40-54; Figs. 9-11, 18.

Substitute Claim Text[1]	Support in Application 17/323,923[2]	Support in Application 12/658,680[3]
along a first bore axis from the first aperture to a second aperture on an exterior surface of the third member, wherein the first bore comprises an interior surface at the first aperture and an interior surface at the second aperture, wherein the exterior surface of the head of the first member abuts the interior surface of the first bore at the second aperture, wherein there are no threads adjacent to the second aperture on the exterior surface of the third member, and wherein the third longitudinal axis and the first bore axis define a first angle,		
wherein the third member further comprises a third aperture on the exterior surface of the third member, and a second bore extending along a second bore axis from the third aperture to a fourth aperture on an exterior surface of the third member, wherein the third longitudinal	Exhibit 2020, p. 17-20, 34-38, 43-45; Figs. 9-11, 18.	Exhibit 2021, p. 21-27, 35-37, 40-54; Figs. 9-11, 18.

Substitute Claim Text[1]	Support in Application 17/323,923[2]	Support in Application 12/658,680[3]
axis and the second bore axis define a second angle,		
wherein the first member couples to the third member by inserting the first end of the first member into the first aperture, through the first bore, and out of the second aperture,	Exhibit 2020, p. 17-20, 34-38, 43-45; Figs. 9-11, 18.	Exhibit 2021, p. 21-27, 35-37, 40-54; Figs. 9-11, 18.
wherein the exterior surface of the head of the first member abuts the interior surface of the first bore at the second aperture,	Exhibit 2020, p. 17-20, 34-38, 43-45; Figs. 9-11, 18.	Exhibit 2021, p. 21-27, 35-37, 40-54; Figs. 9-11, 18.
wherein the second member couples to the third member by inserting the first end of the second member into the third aperture, through the second bore, and out of the fourth aperture,	Exhibit 2020, p. 17-20, 34-38, 43-45; Figs. 9-11, 18.	Exhibit 2021, p. 21-27, 35-37, 40-54; Figs. 9-11, 18.
wherein the first angle is in the range of about 0 degrees to about 90 degrees,	Exhibit 2020, p. 17-20, 34-38, 43-45; Figs. 9-11, 18.	Exhibit 2021, p. 21-27, 35-37, 40-54; Figs. 9-11, 18.
wherein the second angle is in the range of about 0 degrees to about 90 degrees, and	Exhibit 2020, p. 17-20, 34-38, 43-45; Figs. 9-11, 18.	Exhibit 2021, p. 21-27, 35-37, 40-54; Figs. 9-11, 18.
wherein the second bore axis is substantially	Exhibit 2020, p. 17-20, 34-38, 43-45; Figs. 9-11,	Exhibit 2021, p. 21-27, 35-37, 40-54; Figs. 9-11,

Substitute Claim Text[1]	Support in Application 17/323,923[2]	Support in Application 12/658,680[3]
perpendicular to the third longitudinal axis.	18.	18.
Substitute Claim 17		
The assembly of claim [[1]] 16, wherein the head [[portion]] of the first member resides at least partially within the first bore.	Exhibit 2020, p. 17-20, 34-38, 43-45; Figs. 9-11, 18.	Exhibit 2021, p. 21-27, 35-37, 40-54; Figs. 9-11, 18.
Substitute Claim 18		
The assembly of claim [[2]] 17, wherein the exterior surface of the head [[portion]] of the first member abuts the interior surface of the first bore at the first aperture.	Exhibit 2020, p. 17-20, 34-38, 43-45; Figs. 9-11, 18.	Exhibit 2021, p. 21-27, 35-37, 40-54; Figs. 9-11, 18.
Substitute Claim 19		
The assembly of claim [[3]] 18, wherein the head [[portion]] of the first member comprises a torque transmitting aperture.	Exhibit 2020, p. 17-20, 34-38, 43-45; Figs. 9-11, 18.	Exhibit 2021, p. 21-27, 35-37, 40-54; Figs. 9-11, 18.
Substitute Claim 20		
The assembly of claim [[1]] 16, wherein the first aperture of the third member is aligned on the first bore axis.	Exhibit 2020, p. 17-20, 34-38, 43-45; Figs. 9-11, 18.	Exhibit 2021, p. 21-27, 35-37, 40-54; Figs. 9-11, 18.
Substitute Claim 21		
The assembly of claim [[5]] 20, wherein the head [[portion]] of the first member resides at least partially within the	Exhibit 2020, p. 17-20, 34-38, 43-45; Figs. 9-11, 18.	Exhibit 2021, p. 21-27, 35-37, 40-54; Figs. 9-11, 18.

Substitute Claim Text[1]	Support in Application 17/323,923[2]	Support in Application 12/658,680[3]
first bore.		
Substitute Claim 22		
The assembly of claim [[6]] 21, wherein the exterior surface of the head [[portion]] of the first member abuts the interior surface of the first bore at the first aperture.	Exhibit 2020, p. 17-20, 34-38, 43-45; Figs. 9-11, 18.	Exhibit 2021, p. 21-27, 35-37, 40-54; Figs. 9-11, 18.
Substitute Claim 23		
The assembly of claim [[1]] 16, wherein the head portion of the first member is tapered.	Exhibit 2020, p. 17-20, 34-38, 43-45; Figs. 9-11, 18.	Exhibit 2021, p. 21-27, 35-37, 40-54; Figs. 9-11, 18.
Substitute Claim 24		
The assembly of claim [[1]] 16, wherein the first bore axis and the second bore axis intersect outside the third member.	Exhibit 2020, p. 17-20, 34-38, 43-45; Figs. 9-11, 18.	Exhibit 2021, p. 21-27, 35-37, 40-54; Figs. 9-11, 18.
Substitute Claim 25		
The assembly of claim [[1]] 16, wherein the first end of the first member includes a self-tapping edge for removing bone material.	Exhibit 2020, p. 17-20, 34-38, 43-45; Figs. 9-11, 18.	Exhibit 2021, p. 21-27, 35-37, 40-54; Figs. 9-11, 18.
Substitute Claim 26		
The assembly of claim [[10]] 25, wherein the first end of the second member includes a self-tapping edge for removing bone	Exhibit 2020, p. 17-20, 34-38, 43-45; Figs. 9-11, 18.	Exhibit 2021, p. 21-27, 35-37, 40-54; Figs. 9-11, 18.

Substitute Claim Text[1]	Support in Application 17/323,923[2]	Support in Application 12/658,680[3]
material.		
Substitute Claim 27		
An assembly for bone fusion, comprising:	Exhibit 2020, p. 17-20, 34-38, 43-45; Figs. 9-11, 18.	Exhibit 2021, p. 21-27, 35-37, 40-54; Figs. 9-11, 18.
a first member comprising a first elongated body extending from a first end to a second end along a first longitudinal axis, wherein the first member comprises a shaft portion having an external surface and a head portion comprising a head having an exterior surface, said first member further comprising a first thread having a first thread height extending radially outward from the external surface of said shaft portion;	Exhibit 2020, p. 17-20, 34-38, 43-45; Figs. 9-11, 18. 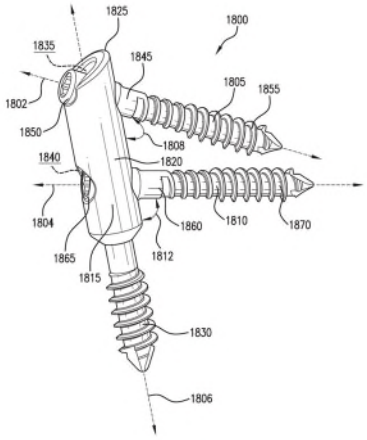 FIG. 18	Exhibit 2021, p. 21-27, 35-37, 40-54; Figs. 9-11, 18. 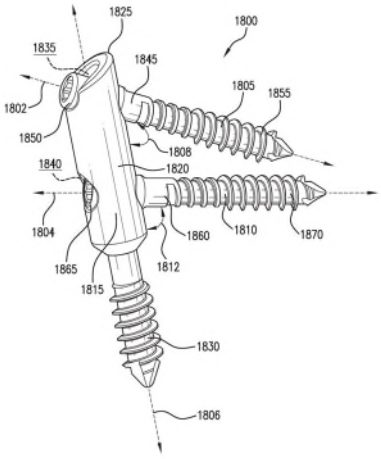 FIG. 18
a second member comprising a second elongated body extending from a first end to a second end along a second longitudinal axis, wherein the second member comprises a shaft having an external surface, said second	Exhibit 2020, p. 17-20, 34-38, 43-45; Figs. 9-11, 18.	Exhibit 2021, p. 21-27, 35-37, 40-54; Figs. 9-11, 18.

Substitute Claim Text[1]	Support in Application 17/323,923[2]	Support in Application 12/658,680[3]
member further comprising a first thread having a first thread height extending radially outward from the external surface of said shaft;		
a third member comprising a third elongated body extending along a straight line from a first end to a second end along a third longitudinal axis, wherein the third member comprises a first aperture at a terminal end of the first end of the third elongated body, and a first bore extending along a first bore axis from the first aperture to a second aperture on an exterior surface of the third member, wherein the first bore comprises an interior surface at the first aperture and an interior surface at the second aperture, wherein there are no threads adjacent to the second aperture on the exterior surface of the third member, and wherein the third	Exhibit 2020, p. 17-20, 34-38, 43-45; Figs. 9-11, 18.	Exhibit 2021, p. 21-27, 35-37, 40-54; Figs. 9-11, 18.

Substitute Claim Text[1]	Support in Application 17/323,923[2]	Support in Application 12/658,680[3]
longitudinal axis and the first bore axis define a first angle,		
wherein the third member further comprises a third aperture on the exterior surface of the third member, and a second bore extending along a second bore axis from the third aperture to a fourth aperture on an exterior surface of the third member, wherein the third longitudinal axis and the second bore axis define a second angle,	Exhibit 2020, p. 17-20, 34-38, 43-45; Figs. 9-11, 18.	Exhibit 2021, p. 21-27, 35-37, 40-54; Figs. 9-11, 18.
wherein the first member couples to the third member by inserting the first end of the first member into the first aperture, through the first bore, and out of the second aperture,	Exhibit 2020, p. 17-20, 34-38, 43-45; Figs. 9-11, 18.	Exhibit 2021, p. 21-27, 35-37, 40-54; Figs. 9-11, 18.
wherein the exterior surface of the head of the first member abuts the interior surface of the first bore at the second aperture,	Exhibit 2020, p. 17-20, 34-38, 43-45; Figs. 9-11, 18.	Exhibit 2021, p. 21-27, 35-37, 40-54; Figs. 9-11, 18.
wherein the second member couples to the third member by inserting the first end of	Exhibit 2020, p. 17-20, 34-38, 43-45; Figs. 9-11, 18.	Exhibit 2021, p. 21-27, 35-37, 40-54; Figs. 9-11, 18.

Substitute Claim Text[1]	Support in Application 17/323,923[2]	Support in Application 12/658,680[3]
the second member into the third aperture, through the second bore, and out of the fourth aperture,		
wherein the second angle is in the range of about 0 degrees to about 90 degrees, and	Exhibit 2020, p. 17-20, 34-38, 43-45; Figs. 9-11, 18.	Exhibit 2021, p. 21-27, 35-37, 40-54; Figs. 9-11, 18.
wherein the second bore axis is substantially perpendicular to the third longitudinal axis.	Exhibit 2020, p. 17-20, 34-38, 43-45; Figs. 9-11, 18.	Exhibit 2021, p. 21-27, 35-37, 40-54; Figs. 9-11, 18.
Substitute Claim 28		
The assembly of claim [[12]] 27, wherein the head [[portion]] of the first member resides at least partially within the first bore.	Exhibit 2020, p. 17-20, 34-38, 43-45; Figs. 9-11, 18.	Exhibit 2021, p. 21-27, 35-37, 40-54; Figs. 9-11, 18.
Substitute Claim 29		
The assembly of claim [[13]] 28, wherein the head portion of the first member is tapered.	Exhibit 2020, p. 17-20, 34-38, 43-45; Figs. 9-11, 18.	Exhibit 2021, p. 21-27, 35-37, 40-54; Figs. 9-11, 18.
Substitute Claim 30		
The assembly of claim [[12]] 27, wherein the head portion of the first member is tapered.	Exhibit 2020, p. 17-20, 34-38, 43-45; Figs. 9-11, 18.	Exhibit 2021, p. 21-27, 35-37, 40-54; Figs. 9-11, 18.

See Ex. 2012 at ¶¶ 85-98.

V. Level of Ordinary Skill in the Art

Patent Owner asserts that one of ordinary skill would be a person with a Bachelor's Degree in biomedical and/or mechanical engineering or similar training and would have at least three years of experience with implant devices used for internal fixation of bones. *See* Ex. 2012 at ¶¶ 30-34.

VI. Claim Construction

In this Motion, Patent Owner does not rely on specific claim constructions to demonstrate patentability of the proposed substitute claims over the prior art. Rather, Patent Owner demonstrates patentability based on the new limitations of the proposed substitute claims. The meanings of the new limitations are discernible from the context of Application 17/323,923, Application 17/002,005, Application 15/884,048, Application 15/181,435, Application 14/599,671, Application 12/658,680, Application 12/456,808, and Provisional 61/132,932, and would be readily understood by those of ordinary skill in the art. Ex. 2012, ¶ 99.

VII. The Proposed Substitute Claims Are Patentable Over the Prior Art

Patent Owner does not bear the burden of either persuasion or production regarding the patentability of the amended claims as a condition of allowance. *See In re Aqua Products*, 872 F.3d at 1296. Patent Owner nonetheless confirms that no combination of the prior art of record teaches or suggests the subject matter of the proposed claims. This Motion and the supporting declaration of Dr. Ledet (Ex. 2012, ¶¶ 100-118) discuss the asserted prior art in this proceeding. *See*

MasterImage 3D, Inc. v. RealD Inc., IPR2015-00040, Paper 42 at 2 (PTAB July 15, 2015); *Nike, Inc. v. Adidas AG*, 812 F. 3d 1326, 1350-51 (Fed. Cir. Feb. 11, 2016). Patent Owner is not aware of any other prior art material to the claimed elements or the claimed assembly as a whole. Consistent with its duty under 37 C.F.R. § 42.11, Patent Owner discloses and distinguishes below the closest references that might be deemed material to the claimed features. *See VMWare, Inc. v. Clouding Corp.*, IPR2014-01292, Paper 23 at 2 (PTAB April 7, 2015).

A. None of the References, Alone or in Combination, Teach Having the Exterior Surface of the Head of the First Member Abut the Interior Surface of the First Bore of the Third Member at the Second Aperture

The substitute independent claims add the following limitations to the existing scope of the original independent claims: (1) the head portion of the first member <u>comprising a head</u> having an exterior surface; (2) the first bore of the third member comprising <u>an interior surface at the second aperture</u>; and (3) <u>wherein the exterior surface of the head of the first member abuts the interior surface of the first bore at the second aperture</u>. The Petition in this proceeding cites to five prior art references for its alleged grounds of invalidity: French Patent Application Publication No. FR 2,861,576 ("Cognet"); U.S. Patent No. 4,827,917 ("Brumfield"); U.S. Patent Application Publication No. 2003/0187447 ("Ferrante"); U.S. Patent Application Publication No. 2006/0206044 ("Simon"); and U.S. Patent No. 6,270,499 ("Leu"). Paper 1 (Petition) at 6; Paper 15

(Institution Decision) at 3. None of Petitioner's prior art references, alone or in combination, teach the above added limitations in combination with the other limitations recited in the proposed substitute claims. *See* Ex. 2012 at ¶¶ 100-118.

The substitute claims all require a first member that couples to the third member where "the exterior surface of the head of the first member abuts the interior surface of the first bore [of the third member] at the second aperture." Figure 18 of the '166 Patent shows this specific claimed configuration (annotations added to show the exterior surface of the head of the first member abutting the interior surface of the first bore of the third member at the second aperture). *See* Ex. 2012 at ¶¶ 95-96.

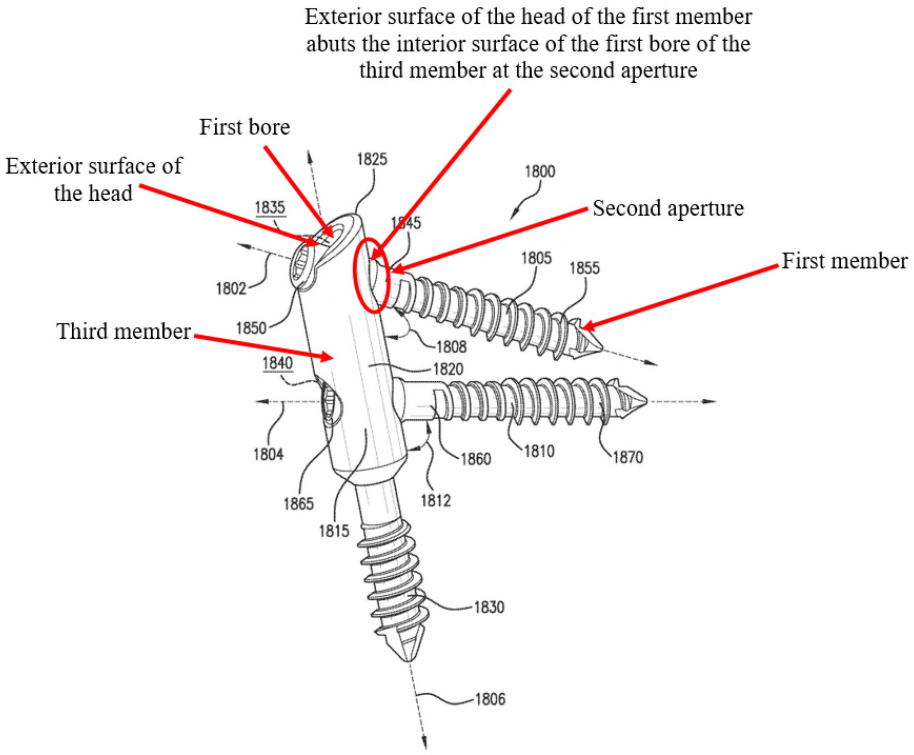

FIG. 18

Notably, Figure 18 shows that the bottom of the head of the first member protrudes out from the second aperture of the third member such that the exterior surface of the head of the first member abuts the interior surface of the first bore at the second aperture. *See* Ex. 2012 at ¶¶ 95-96. Figure 9 also shows a similar configuration where the bottom of the head of a lag screw 815 protrudes out from the second aperture of a tapered screw 810 such that the exterior surface of the head of the lag screw 815 abuts the interior surface of the bore at the second aperture. *See* Ex. 2012 at ¶ 97. Figure 9 is provided below, annotated to show the exterior surface of the head of the lag screw 815 abutting the interior surface of the bore of the tapered screw 810 at the second aperture. *See* Ex. 2012 at ¶ 97.

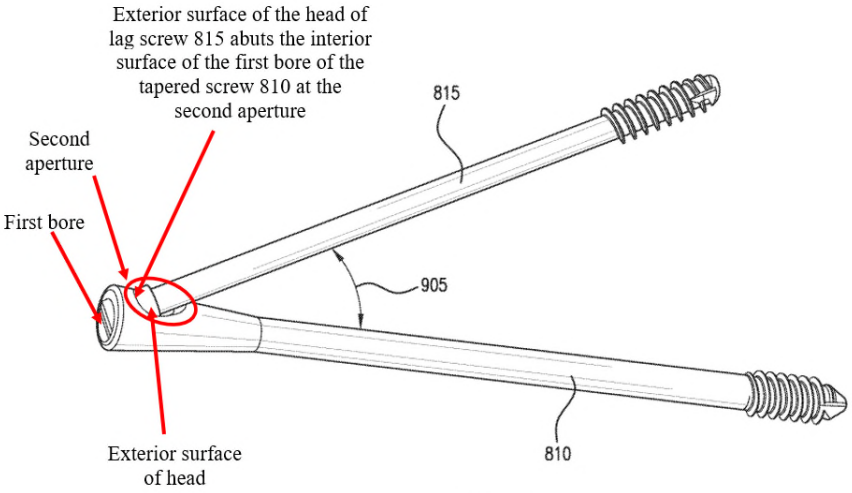

FIG. 9

None of Petitioner's asserted references disclose this claimed configuration, as recited in proposed substitute independent Claims 16 and 27. *See* Ex. 2012 at ¶¶ 100-118.

1. Cognet (Ex. 1004) Does Not Disclose Having the Exterior Surface of the Head of the First Member Abut the Interior Surface of the First Bore of the Third Member at the Second Aperture

Petitioner alleges that Cognet discloses a first member (screw) that couples to a third member (nail) by inserting the first end of the first member/screw into the first aperture of the third member/nail (Figure A, below), through the tunnel running through the third member/nail (Figure B, below), and out of the second aperture (Figure C, below), as shown by Figure 1 of Cognet. Paper 1 at 20-21.

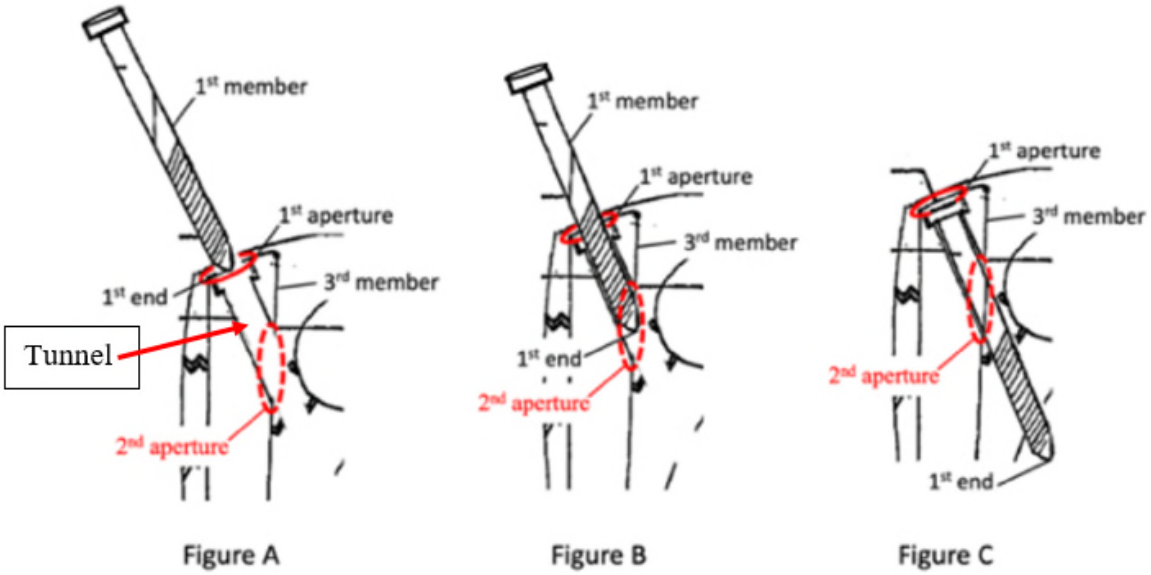

As shown in the annotated image below of Cognet's Figure 1, however, the head of first member (screw 4) clearly does not reach the second aperture and therefore does not disclose "<u>wherein the exterior surface of the head of the first member abuts the interior surface of the first bore at the second aperture</u>," as required by all the proposed substitute claims. Ex. 2012 at ¶ 104.

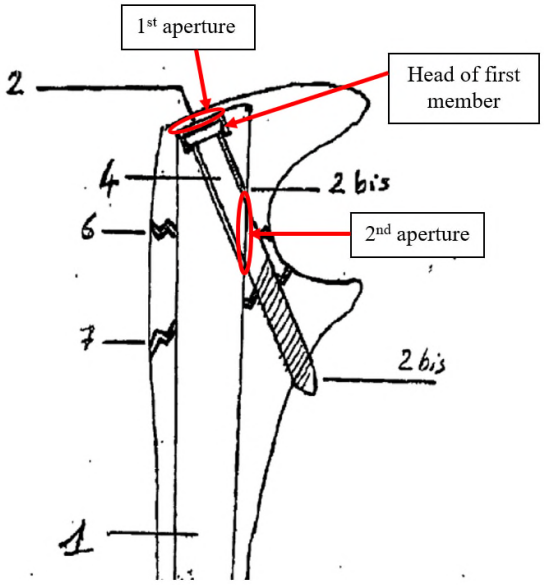

Ex. 1004 at Figure 1; Ex. 2012 at ¶ 104. There is no other disclosure in Cognet that teaches this limitation. Ex. 2012 at ¶¶ 104-105.

2. Brumfield (Ex. 1006) Does Not Disclose Having the Exterior Surface of the Head of the First Member Abut the Interior Surface of the First Bore of the Third Member at the Second Aperture

Brumfield likewise does not disclose having the exterior surface of the head of any component that could be deemed the first member (i.e., either anchoring means 90 or screw 50) abut the interior surface of the first bore of the third member (rod 20) at the second aperture, as required by all the substitute claims. *See* Ex. 2012 at ¶ 106. Rather, Brumfield discloses attaching members (anchoring means 90 and screw 50) that abut the patient's bone, as shown below in annotated Figure 1 of Brumfield:

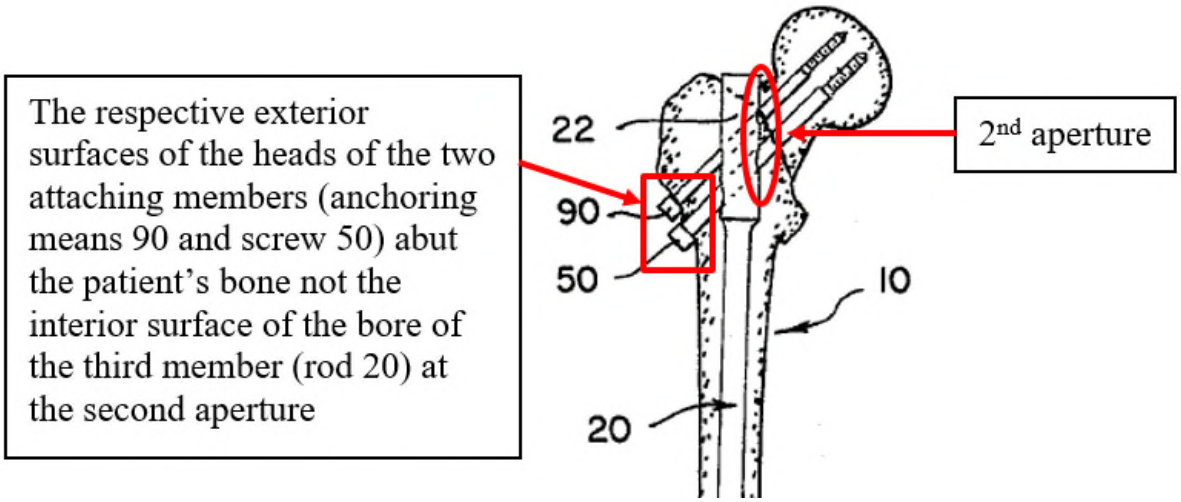

Ex. 1006 at Figure 1; Ex. 2012 at ¶106. There is no other disclosure in Brumfield that teaches an assembly for bone fusion "wherein the exterior surface of the head of the first member abuts the interior surface of the first bore at the second aperture," as required by all the proposed substitute claims. Ex. 2012, ¶¶ 107-108.

3. Ferrante (Ex. 1007) Does Not Disclose Having the Exterior Surface of the Head of the First Member Abut the Interior Surface of the First Bore of the Third Member at the Second Aperture

Ferrante also does not disclose having the exterior surface of the head of the first member (screw 30) abut the interior surface of the first bore of the third member (nail 126) at the second aperture, as required by all the substitute claims. Ex. 2012 at ¶ 109. Rather, similar to Brumfield, Ferrante discloses a screw (30) having a head that abuts the patient's bone (132), as shown below in annotated Figure 15 of Ferrante:

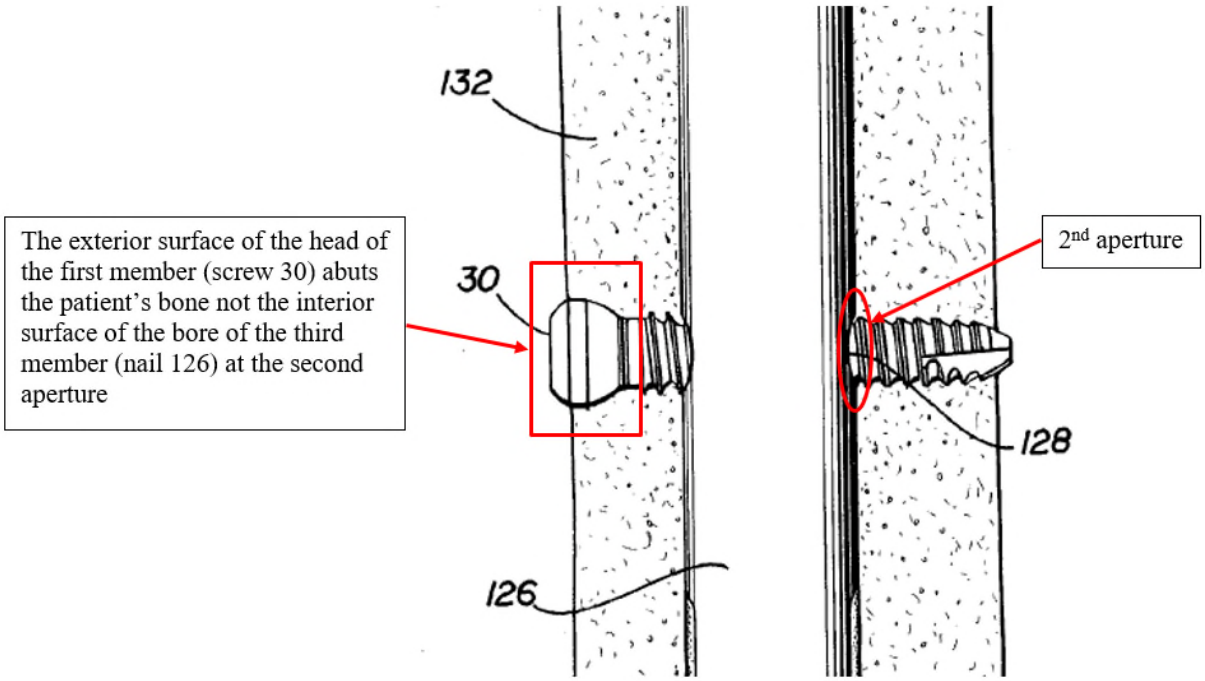

Ex. 1007 at Figure 1; Ex. 2012 at ¶ 109. There is no other disclosure in Ferrante that teaches an assembly for bone fusion "wherein the exterior surface of the head of the first member abuts the interior surface of the first bore at the second aperture," as required by all the proposed substitute claims. Ex. 2012, ¶¶ 110-111.

4. Simon (Ex. 1008) Does Not Disclose a First Member Having a Head, and Therefore Does Not Disclose Having the Exterior Surface of a Head of a First Member Abut the Interior Surface of the First Bore of the Third Member at the Second Aperture

Simon does not disclose screws that have heads and therefore does teach having the exterior surface of a head of the first member (screw 20) abut the interior surface of the first bore of the third member (nail 10) at the second

aperture, as required by all the substitute claims. Ex. 2012 at ¶ 112. For example, see annotated Figure 1 below:

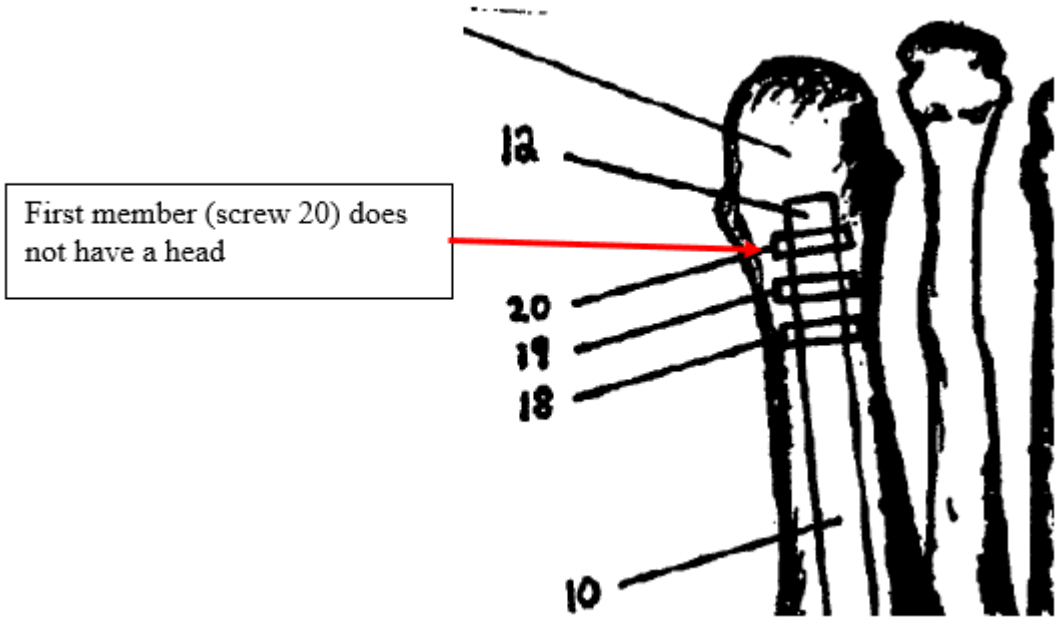

Ex. 1008 at Figure 1; Ex. 2012 at ¶ 112. There is no other disclosure in Simon that teaches an assembly for bone fusion "wherein the exterior surface of the head of the first member abuts the interior surface of the first bore at the second aperture," as required by all the proposed substitute claims. Ex. 2012 at ¶¶ 113-114.

5. Leu (Ex. 1009) Does Not Disclose Having the Exterior Surface of the Head of the First Member Abut the Interior Surface of the First Bore of the Third Member at the Second Aperture

Leu does not disclose having the exterior surface of the head (16) of the first member (screw 12) abut the interior surface of the first bore of the third member (nail 1) at the second aperture, as required by all the substitute claims. Ex. 2012 at ¶ 115. Rather, as shown in the annotated images below of Leu's Figures 1-3, the

thin head (16) of first member (screw 12) rests completely on the lip just below the first aperture of the first bore and clearly does not reach the second aperture of the first bore. Ex. 2012 at ¶ 115. As such, the exterior surface of the head (16) of the first member (screw 12) does not abut the interior surface of the first bore of the third member (nail 1) at the second aperture, as required by all the proposed substitute claims. Ex. 2012 at ¶ 115.

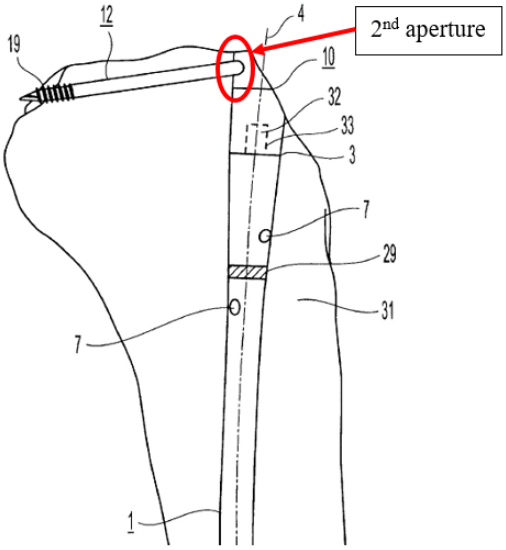

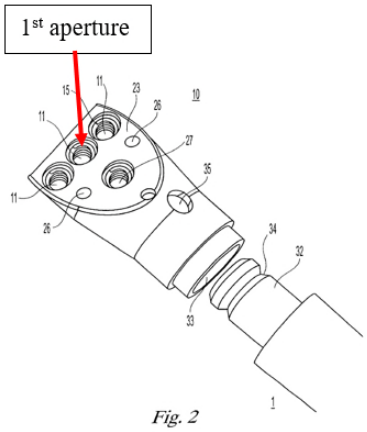

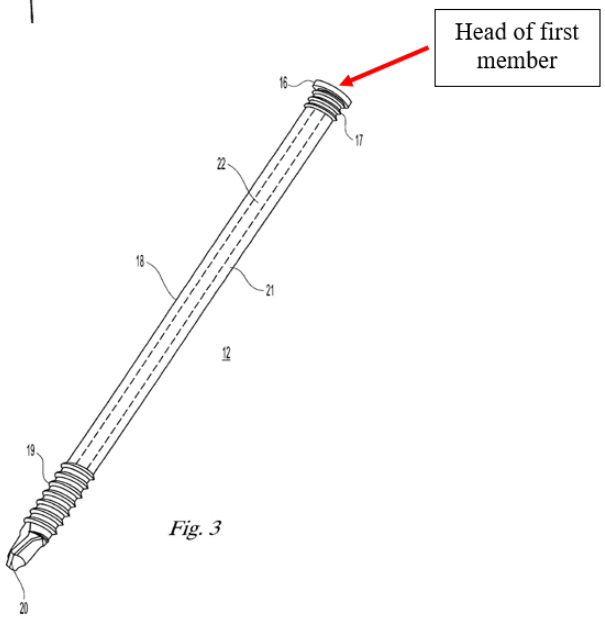

Ex. 1009 at Figures 1-3; Ex. 2012 at ¶ 115. There is no other disclosure in Leu that teaches an assembly for bone fusion "wherein the exterior surface of the head of the first member abuts the interior surface of the first bore at the second aperture," as required by all the proposed substitute claims. Ex. 2012 at ¶¶ 116-117.

* * *

Because, as explained above, none of Cognet, Brumfield, Ferrante, Simon, and Leu, alone or in combination, teach, disclose, or suggest the limitation, "wherein the exterior surface of the head of the first member abuts the interior surface of the first bore at the second aperture," substitute independent Claims 16 and 27, and the claims that depend directly or indirectly therefrom (Claims 17-26 and 28-30), are patentable over these asserted references. Ex. 2012 at ¶¶ 100-118.

VIII. Conclusion

Patent Owner submits that this contingent Motion to Amend meets the requirements of 35 U.S.C. § 316(d) and 37 C.F.R. § 42.121. If the Board finds original Claims 1-15 unpatentable, Patent Owner respectfully requests that the Board grant this Motion as to substitute Claims 16-30. Patent Owner requests preliminary guidance from the Board concerning this contingent Motion to Amend. 84 Fed. Reg. 9497.

Respectfully submitted,

Dated: February 8, 2024

By: /David G. Lindenbaum/

David G. Lindenbaum
Michael J. Zinna
KELLEY DRYE & WARREN LLP
One Jefferson Road
Parsippany, NJ 07054
Telephone: (212) 808-7800
Facsimile: (212) 808-7897
E-mail: dlindenbaum@kelleydrye.com
E-mail: mzinna@kelleydrye.com

Attorneys for Patent Owner Extremity Medical, LLC

CLAIMS APPENDIX

Proposed substitute claims are shown in marked-up form below. Underlining indicates proposed additions to the original claims, double brackets indicate deletions from the original claims.

Claim 16. [Proposed substitute for Claim 1] An assembly for bone fusion, comprising:

a first member comprising a first elongated body extending from a first end to a second end along a first longitudinal axis, wherein the first member comprises a shaft portion having an external surface and a head portion having <u>a head having</u> an exterior surface, said first member further comprising a first thread having a first thread height extending radially outward from the external surface of said shaft portion;

a second member comprising a second elongated body extending from a first end to a second end along a second longitudinal axis, wherein the second member comprises a shaft having an external surface, said second member further comprising a first thread having a first thread height extending radially outward from the external surface of said shaft;

a third member comprising a third elongated body extending along a straight line from a first end to a second end along a third longitudinal axis, wherein the third member comprises a first aperture at a terminal end of the first end of the third elongated body, and a first bore extending along a first bore axis from the first aperture to a second aperture on an exterior surface of the third member, wherein the first bore comprises an interior surface at the first aperture <u>and an interior surface at the second aperture</u>, wherein there are no threads adjacent to the second aperture on the exterior surface of the third member, and wherein the third longitudinal axis and the first bore axis define a first angle,

wherein the third member further comprises a third aperture on the exterior surface of the third member, and a second bore extending along a second bore axis from the third aperture to a fourth aperture on an exterior surface of the third member, wherein the third longitudinal axis and the second bore axis define a second angle,

wherein the first member couples to the third member by inserting the first end of the first member into the first aperture, through the first bore, and out of the second aperture,

wherein the exterior surface of the head of the first member abuts the interior surface of the first bore at the second aperture,

wherein the second member couples to the third member by inserting the first end of the second member into the third aperture, through the second bore, and out of the fourth aperture,

wherein the first angle is in the range of about 0 degrees to about 90 degrees,

wherein the second angle is in the range of about 0 degrees to about 90 degrees, and

wherein the second bore axis is substantially perpendicular to the third longitudinal axis.

Claim 17. [Proposed substitute for Claim 2] The assembly of claim [[1]] 16, wherein the head [[portion]] of the first member resides at least partially within the first bore.

Claim 18. [Proposed substitute for Claim 3] The assembly of claim [[2]] 17, wherein the exterior surface of the head [[portion]] of the first member abuts the interior surface of the first bore at the first aperture.

Claim 19. [Proposed substitute for Claim 4] The assembly of claim [[3]] 18, wherein the head [[portion]] of the first member comprises a torque transmitting aperture.

Claim 20. [Proposed substitute for Claim 5] The assembly of claim [[1]] 16, wherein the first aperture of the third member is aligned on the first bore axis.

Claim 21. [Proposed substitute for Claim 6] The assembly of claim [[5]] 20, wherein the head [[portion]] of the first member resides at least partially within the first bore.

Claim 22. [Proposed substitute for Claim 7] The assembly of claim [[6]] 21, wherein the exterior surface of the head [[portion]] of the first member abuts the interior surface of the first bore at the first aperture.

Claim 23. [Proposed substitute for Claim 8] The assembly of claim [[1]] 16, wherein the head portion of the first member is tapered.

Claim 24. [Proposed substitute for Claim 9] The assembly of claim [[1]] 16, wherein the first bore axis and the second bore axis intersect outside the third member.

Claim 25. [Proposed substitute for Claim 10] The assembly of claim [[1]] 16, wherein the first end of the first member includes a self-tapping edge for removing bone material.

Claim 26. [Proposed substitute for Claim 11] The assembly of claim [[10]] 25, wherein the first end of the second member includes a self-tapping edge for removing bone material.

Claim 27. [Proposed substitute for Claim 12] An assembly for bone fusion, comprising:

a first member comprising a first elongated body extending from a first end to a second end along a first longitudinal axis, wherein the first member comprises a shaft portion having an external surface and a head portion having a head having an exterior surface, said first member further comprising a first thread having a first thread height extending radially outward from the external surface of said shaft portion;

a second member comprising a second elongated body extending from a first end to a second end along a second longitudinal axis, wherein the second member comprises a shaft having an external surface, said second member further comprising a first thread having a first thread height extending radially outward from the external surface of said shaft;

a third member comprising a third elongated body extending along a straight line from a first end to a second end along a third longitudinal axis, wherein the third member comprises a first aperture at a terminal end of the first end of the third elongated body, and a first bore extending along a first bore axis from the first aperture to a second aperture on an exterior surface of the third member, wherein the first bore comprises an interior surface at the first aperture <u>and an interior surface at the second aperture</u>, wherein there are no threads adjacent to the second aperture on the exterior surface of the third member, and wherein the third longitudinal axis and the first bore axis define a first angle,

wherein the third member further comprises a third aperture on the exterior surface of the third member, and a second bore extending along a second bore axis from the third aperture to a fourth aperture on an exterior surface of the third member, wherein the third longitudinal axis and the second bore axis define a second angle,

wherein the first member couples to the third member by inserting the first end of the first member into the first aperture, through the first bore, and out of the second aperture,

wherein the exterior surface of the head of the first member abuts the interior surface of the first bore at the second aperture,

wherein the second member couples to the third member by inserting the first end of the second member into the third aperture, through the second bore, and out of the fourth aperture,

wherein the second angle is in the range of about 0 degrees to about 90 degrees, and

wherein the second bore axis is substantially perpendicular to the third longitudinal axis.

Claim 28. [Proposed substitute for Claim 13] The assembly of claim [[12]] 27, wherein the head [[portion]] of the first member resides at least partially within the first bore.

Claim 29. [Proposed substitute for Claim 14] The assembly of claim [[13]] 28, wherein the head portion of the first member is tapered.

Claim 30. [Proposed substitute for Claim 15] The assembly of claim [[12]] 27, wherein the head portion of the first member is tapered.

CERTIFICATE OF SERVICE

Pursuant to 37 C.F.R. 42.6(e)(1), the parties have agreed to accept service by electronic means. I hereby certify that on February 8, 2024, I caused a copy of the foregoing document to be served via electronic mail to the following addresses:

Jennifer Brinkerhoff	Jen@FusionOrthopedics.com
Corby Vowell	Corby@vowelllawfirm.com
Samuel Rocereta	Sam@FusionOrthopedics.com

By: /David G. Lindenbaum/
David G. Lindenbaum, Reg. No. 51,951