US 20080202235A1

(19) United States

(12) Patent Application Publication

Laps et al.

(10) Pub. No.: US 2008/0202235 A1

(43) Pub. Date: Aug. 28, 2008

(54) SENSOR ASSEMBLY

(75) Inventors: **Larry D. Laps**, Canton, OH (US); **Scott Warren**, Dover, OH (US); **Ernie Wanner**, Massillon, OH (US); **Robert D. Ringle**, Canton, OH (US); **Timothy J. Krabill**, Louisville, OH (US); **Greg Piotrowski**, North Canton, OH (US)

Correspondence Address:
POLSTER, LIEDER, WOODRUFF & LUCCHESI
12412 POWERSCOURT DRIVE SUITE 200
ST. LOUIS, MO 63131-3615 (US)

(73) Assignee: **THE TIMKEN COMPANY**, Canton, OH (US)

(21) Appl. No.: **11/996,163**

(22) PCT Filed: **Jul. 20, 2006**

(86) PCT No.: **PCT/US06/28421**

§ 371 (c)(1), (2), (4) Date: **Jan. 18, 2008**

Related U.S. Application Data

(60) Provisional application No. 60/701,047, filed on Jul. 20, 2005, provisional application No. 60/731,708, filed on Oct. 31, 2005.

Publication Classification

(51) **Int. Cl.**
G01D 11/24 (2006.01)

(52) **U.S. Cl.** **73/431**

(57) **ABSTRACT**

A sensor assembly. A sensor assembly **34** that has a sensing element **26** is mountable in a housing **5**. The housing has an inner surface **12**, an outer surface **14**, a bore **16** disposed there through and further has a sensed object **24** positioned across a gap from the sensing element **26**. The sensor assembly **34** comprises a sensor body **35** having a first portion **36** and a second portion **38**, the first portion **36** and the second portion **38** being positioned within the bore **16**. The second portion **38** positions the sensing element **26** at an end of the second portion **38**. The sensor assembly **34** further comprises an anti-corrosion member **56** positioned within the bore **16**. Additionally, the sensor assembly **34** comprises a retaining member **58** removably fastened to the first portion **36** wherein the retaining member **58** such that the anti-corrosion member **56** isolates the sensing element **26** from the outer surface **14** to prevent contaminants from contacting the sensing element **26**.

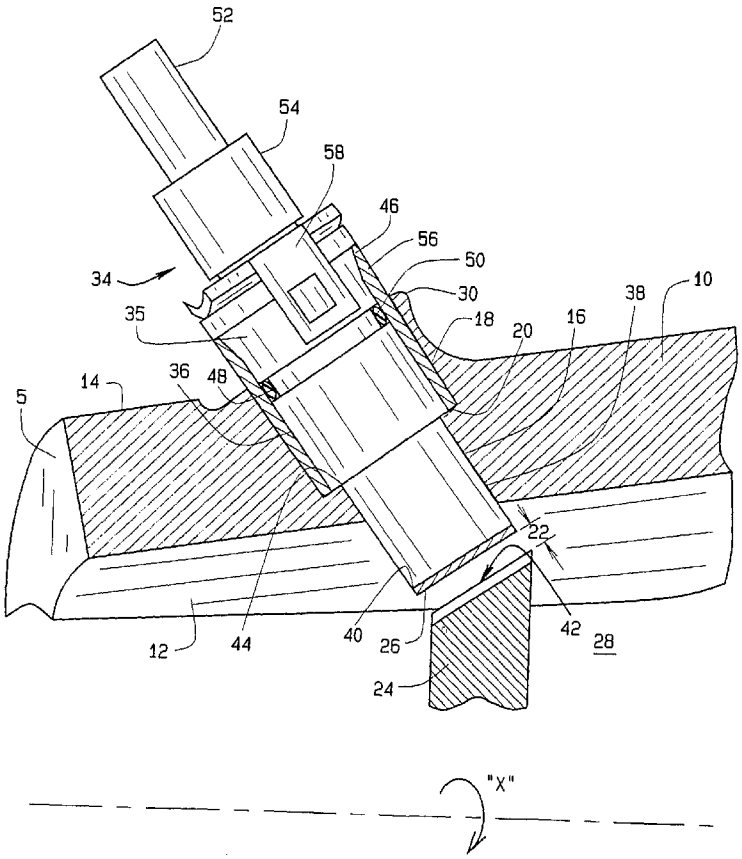

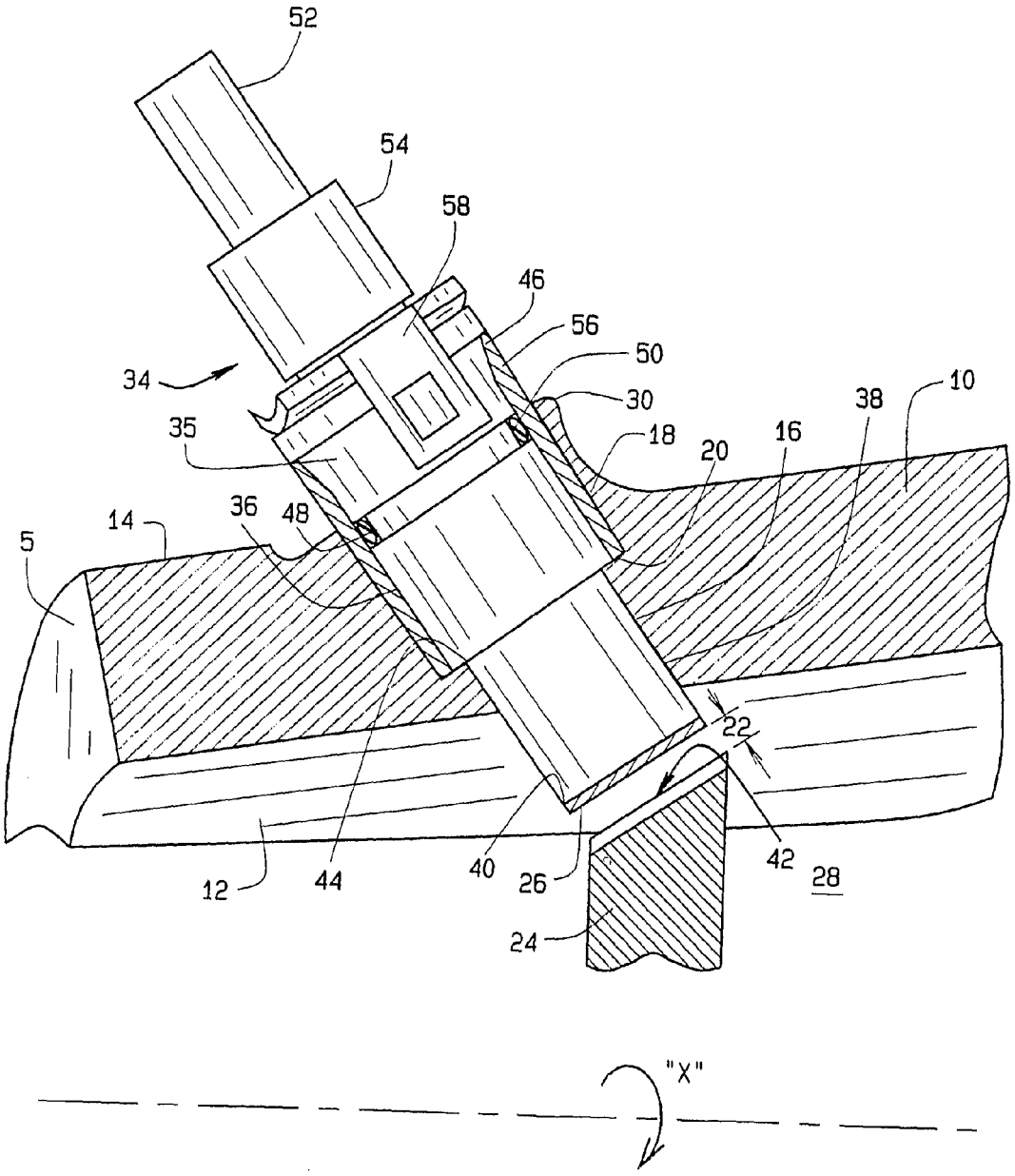
52
54
58
46
56
50
30
34
35
18
20
16
38
10
14
36
48
5
22
42
28
12
44
40
26
24
"X"

FIG. 1

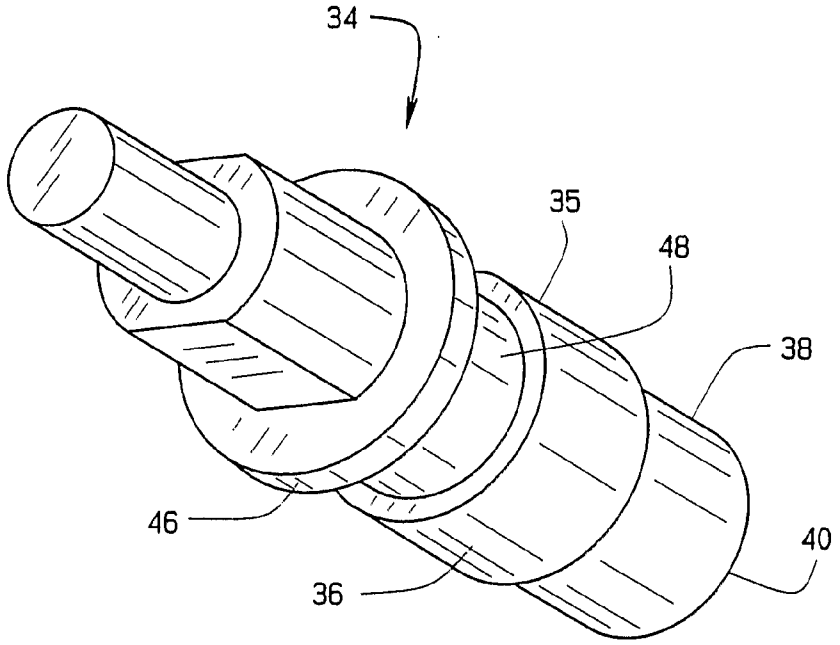

FIG. 2

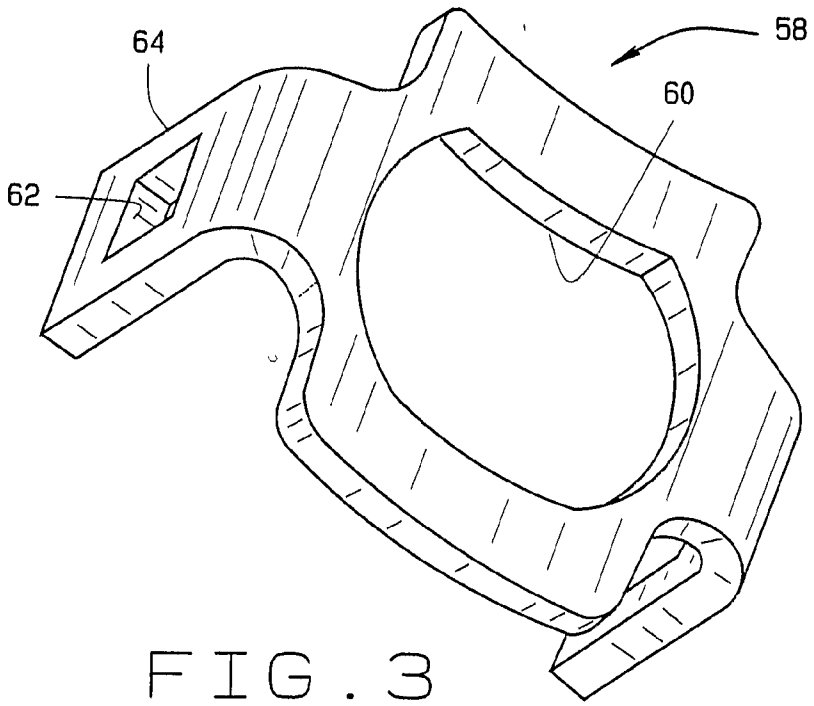

FIG. 3

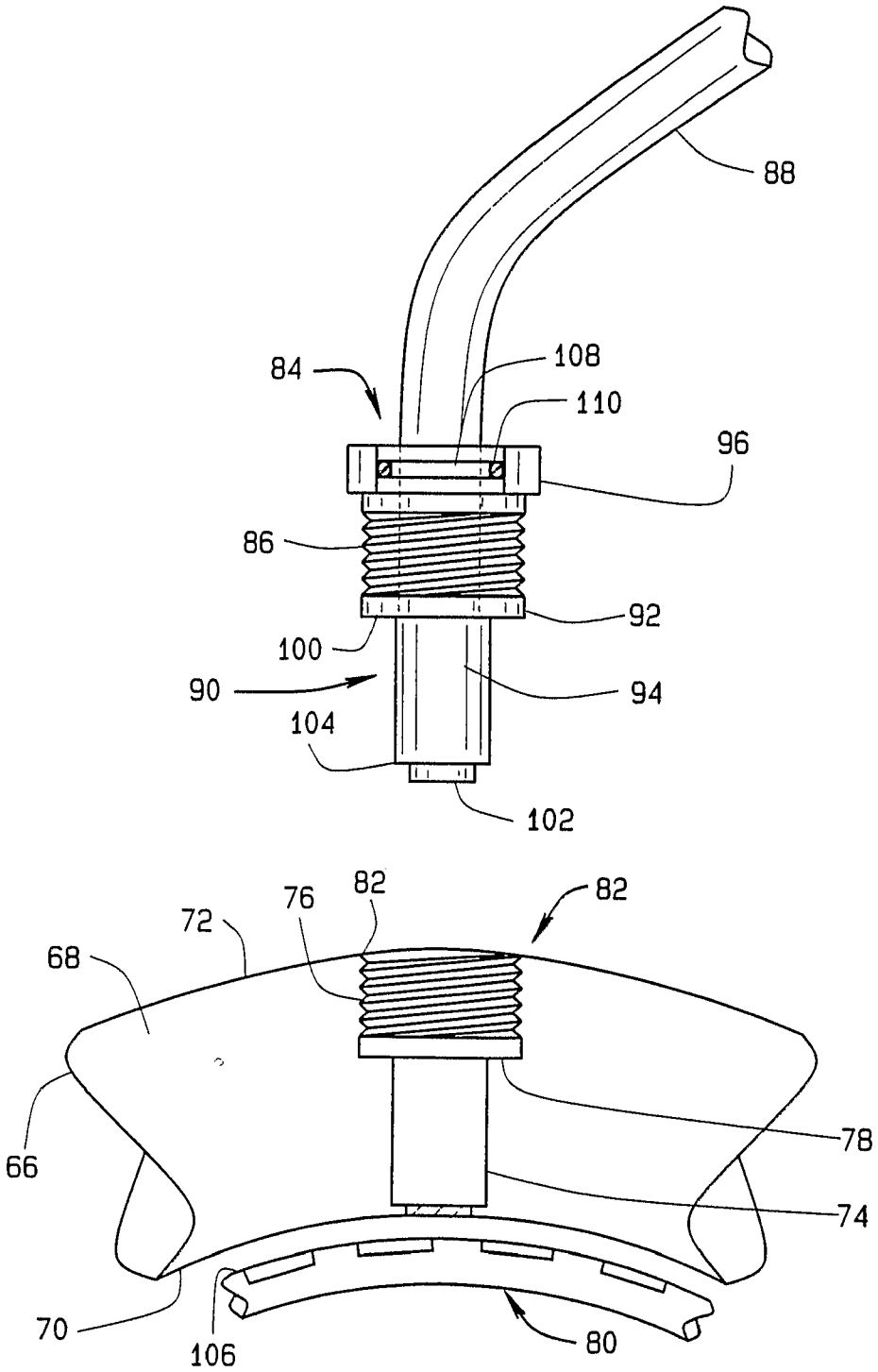
88
84
108
110
96
86
92
100
90
94
104
102
82
76
82
72
68
78
66
74
70
106
80

FIG. 4

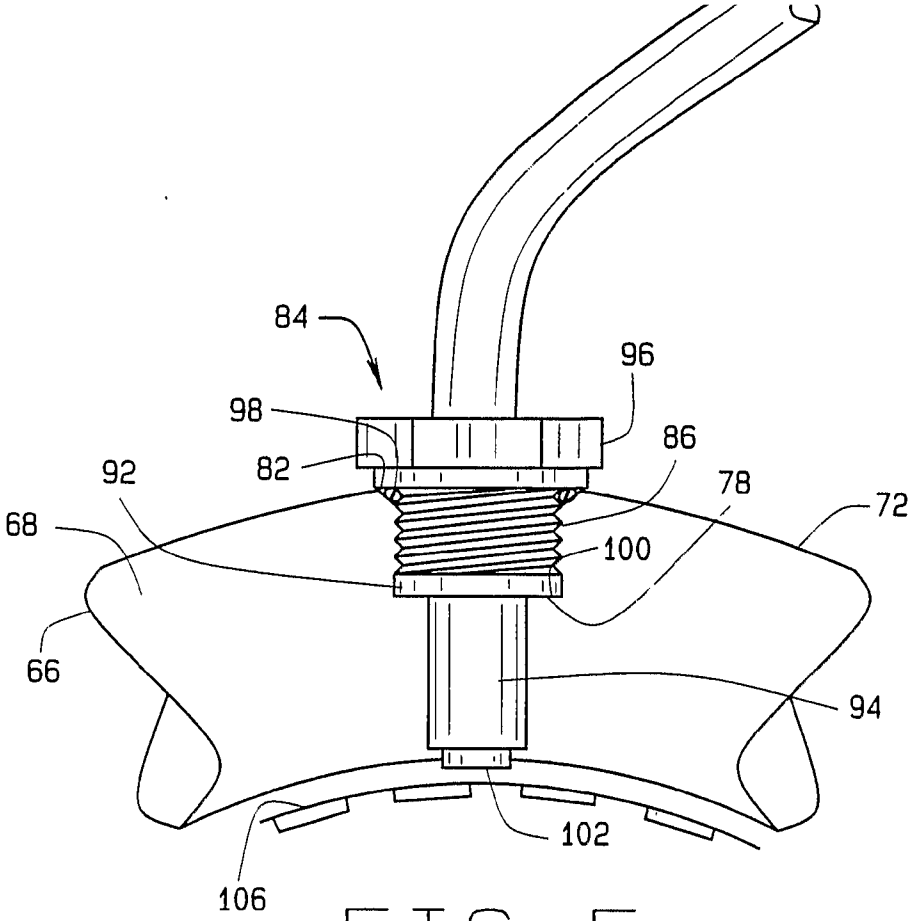
84
96
98
86
82
92
78
72
68
100
66
94
102
106

FIG. 5

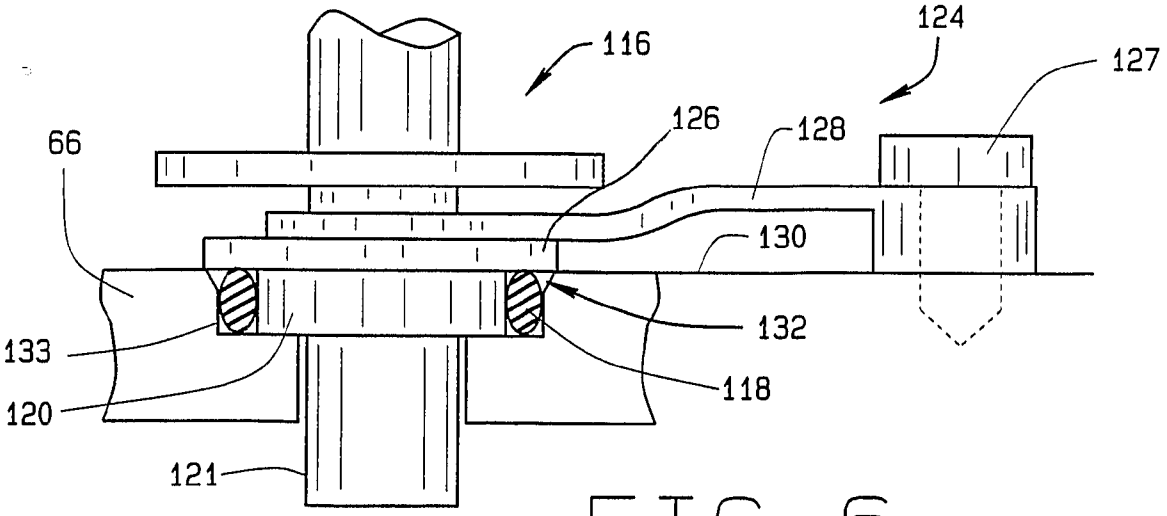
116
124
127
126
128
66
130
132
133
118
120
121

FIG. 6

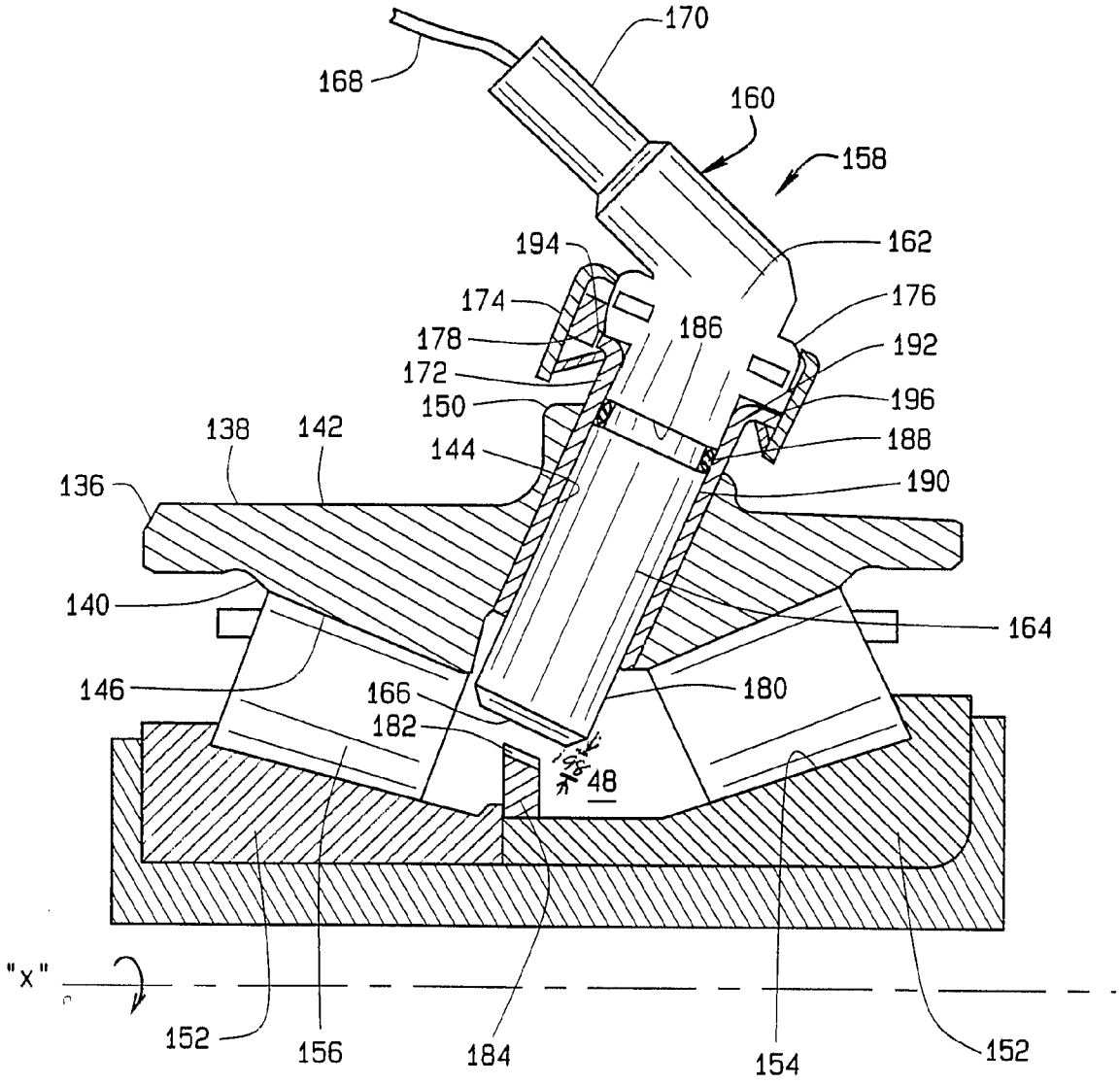
170
168
160
158
194
162
174
176
178
186
192
172
150
196
138
142
144
188
136
190
140
164
146
166
180
182
48
"x"
152
156
184
154
152

FIG. 7

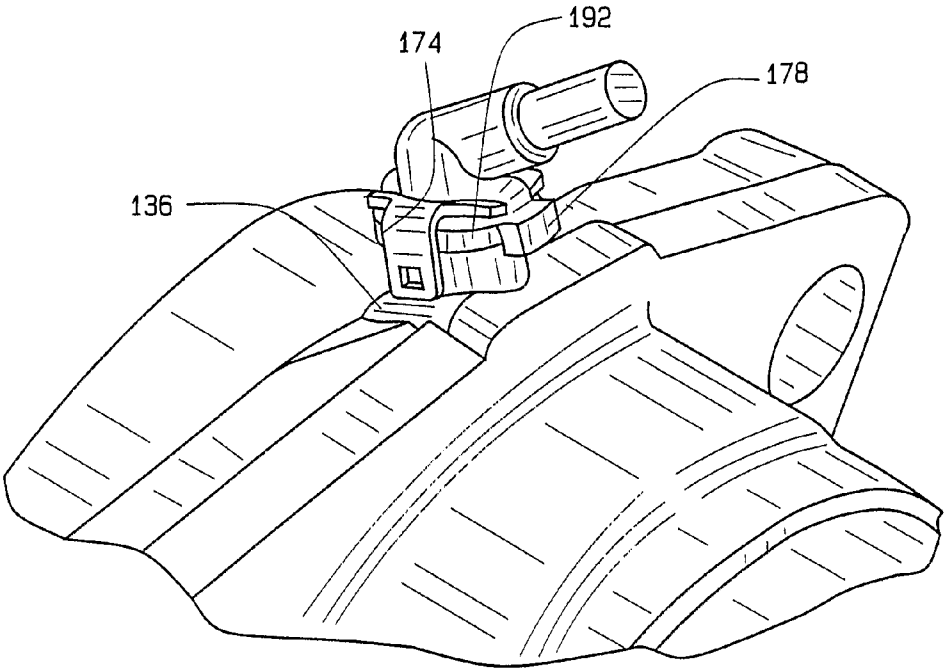

FIG. 8

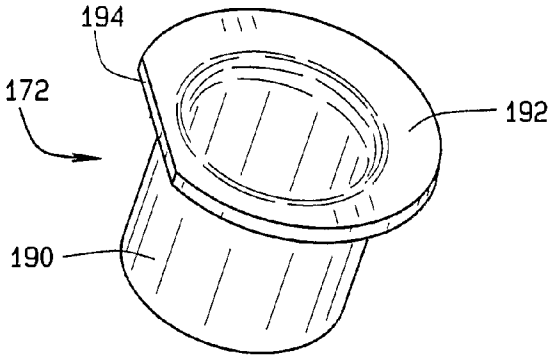

FIG. 9

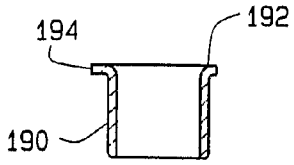

FIG. 10

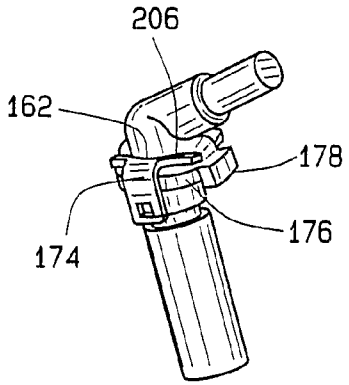

FIG. 11

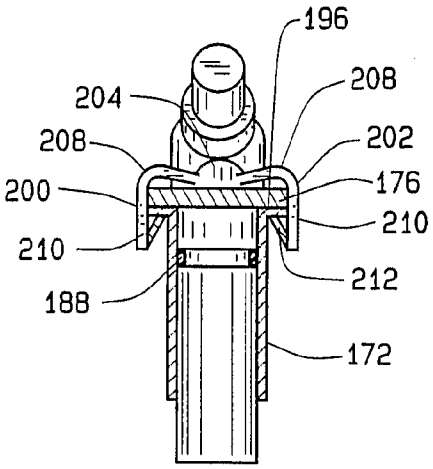

FIG. 12

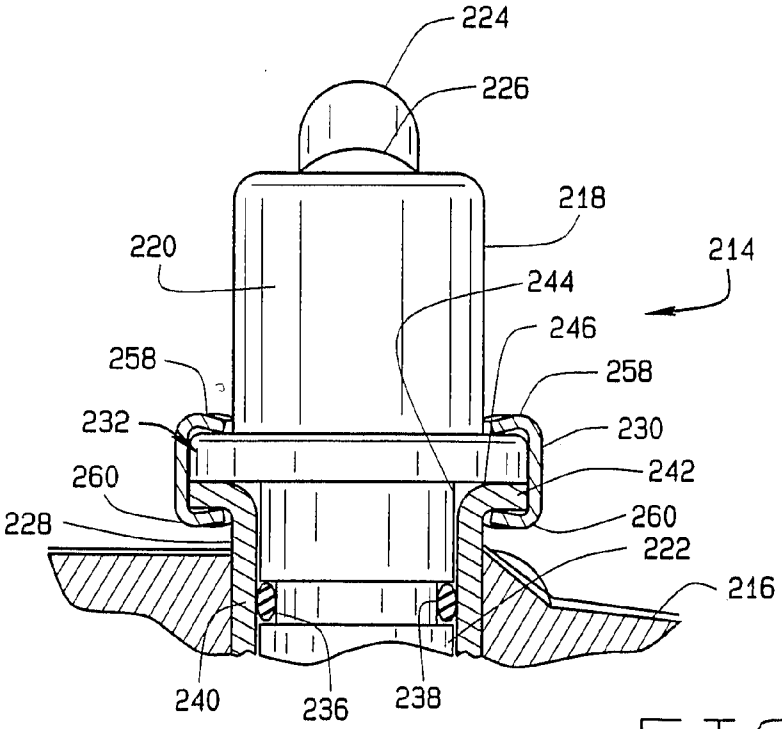

FIG. 13

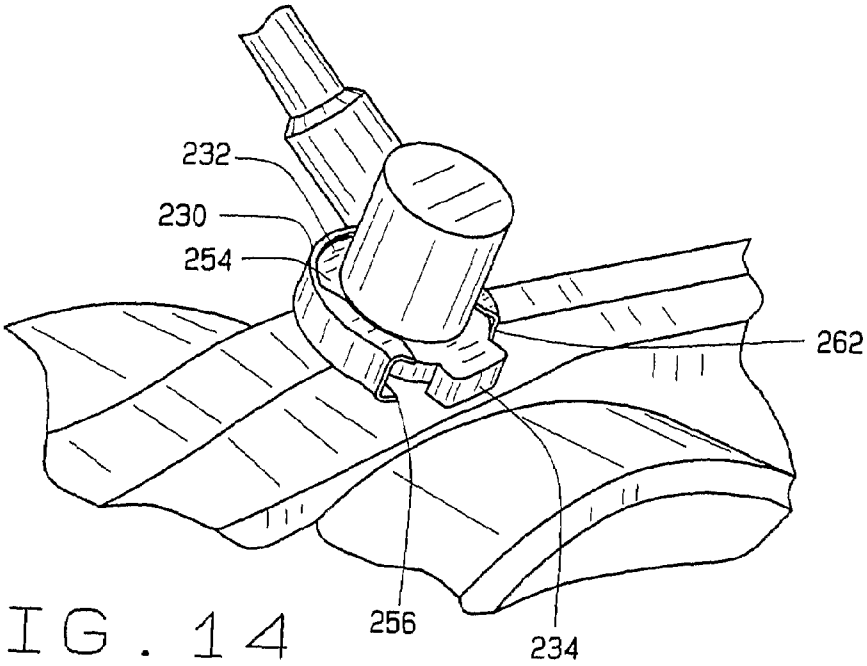

FIG. 14

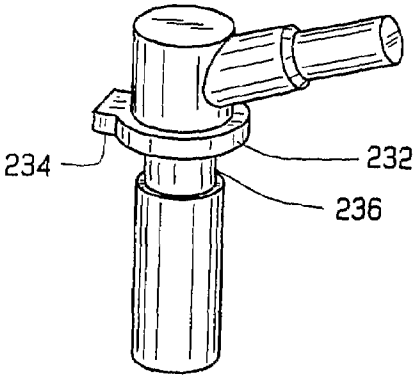

FIG. 15

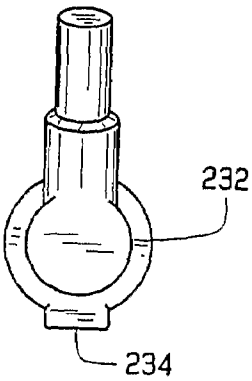

FIG. 16

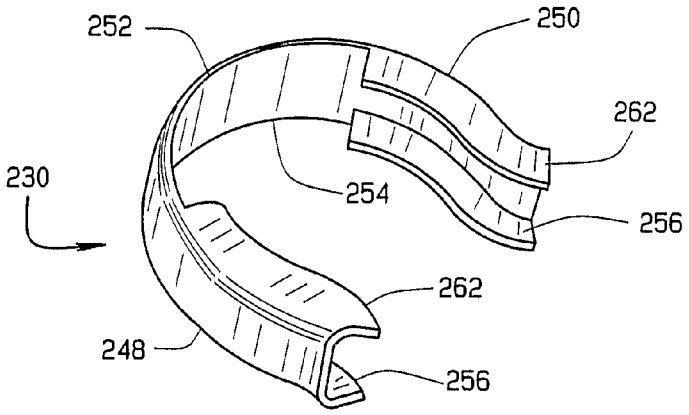

FIG. 17

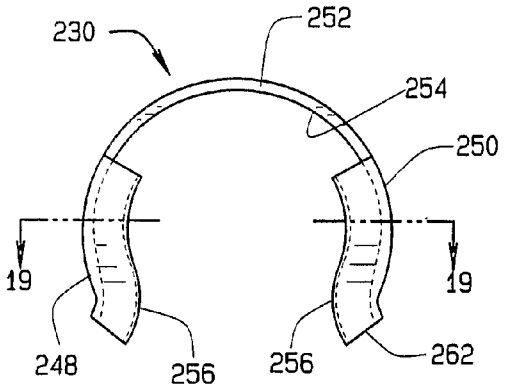

FIG. 18

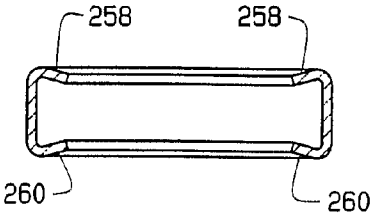

FIG. 19

SENSOR ASSEMBLY

CROSS-REFERENCE TO RELATED APPLICATIONS

[0001] This application claims priority to U.S. Patent Nos. 60/701,047 and 60/731,708 filed Jul. 20, 2005 and Oct. 31, 2005 respectively and both applications are incorporated herein by reference.

TECHNICAL FIELD

[0002] This invention relates in general to sensor assemblies and more particularly to a sensor assembly that is capable of eliminating corrosion on a sensor mounting surface and eliminates corrosion that affects a sensing element of the sensor assembly.

BACKGROUND ART

[0003] For sensors mounted in metal housings, the interface between the sensor and housing is critical. The mounting/interface surface for the sensor is typically the reference surface that positions the sensor. As such, the mounting must be located properly and must be protected from corrosion throughout the expected life of the sensor. Corrosion between the sensor and mounting surface can cause the sensor to lift from the surface, affecting the gap between the sensor and target being monitored. The size and integrity of the gap between the sensor and target are quite important. Typically, the gap should be kept relatively small and within close tolerances for the sensor to function properly.

[0004] In order for corrosion to occur, there must be an electrochemical cell consisting of an anode, a cathode and conductive fluid or gas in contact with the anode and cathode. If even a small gap exists between the sensor and mounting surface and the gap allows a conductive fluid to get under the sensor, an accelerated type of corrosion called crevice corrosion can occur. Crevice corrosion can exert a significant upward force against the sensor, causing it to lift from the surface. Therefore protection of the mounting surface from corrosion is critical to proper sensor operation. One application where sensors are mounted on steel in severe environments is automotive wheel bearings. For these applications, the sensor mounting surface must be protected against the effects of water, saltwater and vehicle fluids under a range of temperatures and other environmental conditions.

[0005] In addition, protection of the sensor bore is critical for serviceability of the sensor. If the sensor bore is not protected, a ring of corrosion will build up within the bore, making it impossible to remove the sensor.

[0006] Applications today use various methods to protect the sensor mounting surface, the primary means being the application of grease between the sensor and mounting surface. However, testing has shown that under severe corrosion conditions, the grease can be washed out, resulting in reduced performance. Other applications such as those described in U.S. Pat. Nos. 5,085,519, 5,123,755 and 5,192,138 use O-ring seals around the sensor. These applications, however, expose the mounting surface of the sensor to the environment.

[0007] The foregoing and other objects, features, and advantages of the disclosure as well as presently preferred embodiments thereof will become more apparent from the reading of the following description in connection with the accompanying drawings.

BRIEF DESCRIPTION OF THE DRAWINGS

[0008] In the accompanying drawings which form part of the specification:

[0009] FIG. **1** is a sectional view of a portion of a sensor assembly constructed in accordance with and embodying the present disclosure showing: the sensor assembly mounted in a sleeve having a seal between the sleeve inner diameter and sensor outer diameter, with the sleeve mounted in a housing bore; a sensor shoulder of the sensor assembly seated against a reference mounting surface of the housing bore and a retaining member fastened to the sensor assembly and applying a seating force to the sensor assembly;

[0010] FIG. **2** is a perspective view of an embodiment of a sensor body of the sensor assembly of FIG. **1**;

[0011] FIG. **3** is a perspective view of an embodiment of the retaining member of the sensor assembly of FIG. **1**;

[0012] FIG. **4** is a breakaway sectional view of a portion of another sensor assembly constructed in accordance with and embodying the present disclosure showing the sensor assembly being inserted into a housing;

[0013] FIG. **5** is a sectional view of a portion of the sensor assembly of FIG. **4** showing the sensor assembly mounted in the housing, wherein the sensor assembly mounts in a bore of the housing, while a threaded fitting applies a seating force to the sensor assembly and further showing a seal mounted at a top of the bore to prevent contaminant ingress into the bore;

[0014] FIG. **6** is a sectional view of a portion of another sensor assembly constructed in accordance with and embodying the present disclosure showing: a sensor assembly mounted in a bore of a housing having a counterbore to accept a seal, with a sensor shoulder of the sensor assembly seated against a reference mounting surface in the bore; and another retaining member of the present disclosure attached to the housing to apply a seating force to the sensor assembly;

[0015] FIG. **7** is a sectional view of a portion of another sensor assembly having a sleeve and a retaining member, constructed in accordance with and embodying the present disclosure, showing: the sensor assembly mounted in the sleeve having a seal between the sleeve inner diameter and an outer diameter of the sensor assembly, with the sleeve mounted in a housing bore and the retaining member connected to the sleeve; the sensor assembly having a flanged end and an anti-rotation member wherein the anti-rotation member contacts the sleeve;

[0016] FIG. **8** is a perspective view of an embodiment of the retaining member of FIG. **7** contacting the flanged end;

[0017] FIG. **9** is a perspective view of the sleeve of FIG. **7**;

[0018] FIG. **10** is a side view of the sleeve of FIG. **9**;

[0019] FIG. **11** is a perspective view of the retaining member of FIG. **7** contacting the flanged end;

[0020] FIG. **12** is a front elevational view of the retaining member of FIG. **11** contacting the flanged end and sleeve;

[0021] FIG. **13** is a sectional view of a portion of another sensor assembly having a sleeve and a retaining member, constructed in accordance with and embodying the present disclosure, showing: the sensor assembly mounted in the sleeve having a seal between the sleeve inner diameter and an outer diameter of the sensor assembly, with the sleeve

mounted in a housing bore; the sensor assembly having a flanged end wherein the retaining member contacts the flanged end and the sleeve;

[0022] FIG. **14** is a perspective view of an embodiment of the retaining member engaging the flanged end;

[0023] FIG. **15** is a perspective view of a sensor body and retaining member of the sensor assembly of FIGS. **13** and **14**;

[0024] FIG. **16** is a plan view of the sensor body the sensor assembly of FIG. **15**;

[0025] FIG. **17** is a perspective view of the retaining member of FIG. **13**;

[0026] FIG. **18** is a plan view of the retaining member of FIG. **17**; and

[0027] FIG. **19** is a sectional view along line "**19-19**" of FIG. **18**.

[0028] Corresponding reference numerals indicate corresponding parts throughout the several figures of the drawings.

BEST MODES FOR CARRYING OUT THE INVENTION

[0029] The following detailed description illustrates the disclosure by way of example and not by way of limitation. The description clearly enables one skilled in the art to make and use the disclosure, describes several embodiments, adaptations, variations, alternatives, and uses of the disclosure, including what is presently believed to be the best mode of carrying out the disclosure.

[0030] The disclosure relates to an assembly having a sensor system that produces an output signal while preventing corrosion build-up in a sensor mounting surface. The sensor assembly of the present disclosure may relate to a variety of technologies. For example, the sensor may monitor a variety variables relating to an object to produce an output signal for the monitored variables. These variables may include but are not limited to speed, load, temperature or vibration. In all applications, the sensor assembly interacts with a housing to prevent corrosion build-up on the sensor mounting surface.

[0031] For illustrative purposes, the following description illustrates the sensor assembly monitoring a speed variable. One application of this disclosure may relate to automotive wheel bearings, that is to say a wheel end, where a speed sensor of the present disclosure mounts within a housing, projecting into the bearing wherein the sensor detects the speed of a rotating component.

[0032] A bearing assembly may couple a road wheel to the suspension system of an automotive vehicle, particularly to a component of the suspension system, such as a steering knuckle and enables the wheel to rotate about an axis of rotation, which is, of course, the axis of the bearing assembly. Aside from coupling the wheel to a component of the suspension system, the bearing assembly further generates an electrical signal, which is responsive to the rotation of the wheel and, indeed, represents the angular velocity at which the wheel revolves about the axis. This enables a controller in an antilock brake system or traction control system to monitor the angular velocity of the wheel.

[0033] A sensor assembly is removably mountable within a housing **5** (FIG. **1**). The housing **5** which may include a bearing assembly that includes an outer race **10** having a generally cylindrical external surface, wherein the outer race **10** may be stationary relative to a rotating shaft (not shown). In an embodiment, the housing **5** may be incorporated into a suspension system (such as the system partially shown in FIG. **8**) wherein the housing defines an axis "X" of rotation there through. The outer race **10** has an inner surface **12** and an outer surface **14**. Between the inner and outer surfaces **12** and **14**, a bore **16** is disposed there through, wherein the bore **16** includes a counterbore **18**. The counterbore **18** has a larger diameter than the bore **16** to form a reference-mounting surface **20** of the interface of the bore **16** and the counterbore **18**. The reference mounting surface **20** may be dimensioned within the bore **16** to properly set a gap **22** between a sensed object **24** and a sensing element **26**. In this illustrative example, the sensed object **24** may comprise a target wheel. The sensor object **24** along with its operative surface cooperates with the sensing element **26** to produce a pulsating signal when inner race rotates within the outer race, with the frequency of the signal reflecting the angular velocity.

[0034] In an embodiment, the bore **16** and counterbore **18** may angle obliquely within the housing **5**. In other embodiments, the bore **16** and counterbore **18** may configure at any angle within the housing **5**. The bore **16** opens into the interior **28** of the housing **5** while the counterbore **18** opens out of the outer surface **14**. The bore **16** and counterbore **18** may lie within the thickest portion of the outer race **10** and indeed exist not only in the region between the inner and outer surfaces **12**,**14**, but also within a boss **30** that projects from the generally cylindrical outer surface **14** of the outer race **10**.

[0035] The bearing assembly associated with housing **5** further comprises an inner race (not shown). The bearing, while permitting the shaft to rotate about the axis "X" of rotation, confines the shaft radially and axially within the housing **5**. In other words, the bearing transfers radial loads between the shaft and the housing **5** and also thrust loads in axial directions. The bearing includes the inner race in the form of a cone, the outer race **10** in the form of a cup and rolling elements (not shown) in the form of rollers. The inner race has an inner raceway that may incline with respect to the axis "X" of rotation, and the outer race **10** has an outer raceway that may incline with respect to the axis "X" of rotation.

[0036] The rolling elements are located between and contact the inner race and the outer race. The rolling elements are confined within cages, which distribute the rolling elements uniformly and thereby maintain the proper spacing between the rolling elements. The cages also retain the rolling elements around the inner race when the inner race is withdrawn from the housing/outer race. The rolling elements transmit thrust and radial loads between the outer racer and the inner race, while reducing friction to a minimum.

[0037] A sensor assembly, generally shown as **34**, of the present disclosure removably mounts within the housing **5** (FIG. **1**). The sensor assembly **34** comprises a sensor body **35**, which includes a first portion **36** and a second portion **38**. The first portion **36** is positioned within the bore **16** and partially extends beyond the outer surface **12** of the housing **5** while the second portion **38** is positioned within the bore **16**. The sensor assembly **34** positions the sensing element **26** at an inner end **40** of the second portion **38**. Furthermore, the second portion **38** may position the sensing element **26** at an angle opposite an operative surface **42** of the sensed object **24**.

[0038] The first portion **36** may have a larger diameter than a diameter of the second portion **38** to form a sensor shoulder **44** at the interface of the first portion **36** and the second portion **38**. The sensor shoulder **44** contacts the reference mounting surface **20** when the sensor body **35** mounts within the housing **5**. When the sensor shoulder **44** contacts the reference mounting surface **20**, the first portion **36** positions

within the counterbore **18** while the second portion **38** positions within the bore **16**. As such, these portions of the sensor assembly **34** are contained within the housing **5**.

[0039] The sensor assembly **34** also comprises a flanged end **46** that radially extends outward from the first portion **36** and over portions of the outer surface **14**. Further, the first portion **36** includes an annular groove **48** (FIGS. **1-2**). The annular groove **48** is located between the flanged end **46** and the inner end **40** of the second portion **38**. That is to say, the annular groove **48** is positioned within the first portion **36** that fits within the counterbore **18**. A seal **50** (FIG. **1**) is radially positioned within the annular groove **48** such that the seal **50** isolates the first portion **36** and the second portion **38** of the sensor assembly **34** from the outer surface **14** of the housing **5**. The seal **50** also isolates the first portion **36** and the second portion **38** from the boss **30**. This isolation by the seal **50** prevents contaminants from contacting the first and second portions **36**,**38** and reference mounting surface **20** (FIG. **1**). In an embodiment, the seal **50** may comprise an O-ring.

[0040] The sensor assembly **34** further comprises a flexible electrical conduit **52** emerging from a suitable grommet **54**, which prevents ingress of contaminants into the other components of the sensor assembly **34**. FIG. **2** shows a perspective view of the sensor assembly **34** and illustrates the sensor body **35**, first portion **36**, second portion **38**, flanged end **46** and annular groove **48**.

[0041] Returning to FIG. **1**, the sensor assembly **34** further comprises an anti-corrosion member **56** in the form of a sleeve. The anti-corrosion member **56** is positioned within the bore **16** and partially extending beyond the outer surface **14** of the housing **5** while contacting the sensor body **35**. As shown, the anti-corrosion member/sleeve **56** surrounds a portion of the first portion **36**, annular groove **48** and seal **50**. As such, the seal **50** is positioned between the inner diameter of the seal sleeve **56** and the outer diameter of the first portion **36**. As shown, the sleeve **56** press fits within the counterbore **18**. The sleeve **56** must be properly oriented during installation such that an end of the sleeve contacts the reference mounting surface **20**. The sleeve **56** may comprise any suitable material such as but not limited to plastic, steel or brass.

[0042] The sensor assembly **34** additionally comprises a retaining member **58** (FIG. **1**). The retaining member **58** removably fastens to the first portion **36** and contacts the anti-corrosion member **56**. The retaining member **58** retains the anti-corrosion member **56** against the first portion **36** of the sensor body **35** such that the anti-corrosion member **58** isolates the sensing element **26** from the outer surface **12** to prevent contaminants from contacting the sensing element **26**. In particular, the retaining member **58** removably fastens to the flanged end **46** of the sensor assembly **34**. The retaining member **58** also contacts the anti-corrosion member **56** in order to properly orientate the sensing element **26** in the bore **16**. The retaining member **58** may comprise a means for attaching to the anti-corrosion member **56** such that the sensing element **26** is properly oriented rotationally in the bore **16**. In an embodiment, the retaining member **58** may comprise a fastener in the form of a spring clip.

[0043] FIG. **3** shows an embodiment of the retaining member **58** comprising at least one side portion **64** that has a center aperture **60** defined there through that aligns with the sensor assembly **34** (FIG. **1**). Apertures **62** in side portions **64** of the retaining member **58** may align with projections on the anti-corrosion member **56**. In another embodiment, another option to provide sensor retention and orientation is to have a lip around the perimeter of the top portion of the anti-corrosion member **56**, with the lip having a flat side. In this embodiment, the retaining member **58** aligns with the flats on the anti-corrosion member **56** and clips over the lip.

[0044] The sensor assembly **34** of FIGS. **1-3** results in the sensor mounting surface **20** being positioned below the seal **50** and therefore eliminates corrosion on the sensor mounting surface **20**. Additionally, this sensor assembly **34** eliminates the need for machining of the sensor pad and simplifies the sensor design by eliminating a sensor attachment flange. Furthermore, this sensor assembly **34** eliminates a capscrew and tapped capscrew hole typically used in a wheel bearing application.

[0045] Turning to FIGS. **4** and **5**, another embodiment of a sensor assembly of the present disclosure is shown. In this embodiment, the housing **66** which may include a bearing assembly that has an outer race **68** having a generally cylindrical external surface, wherein the outer race **68** may be stationary relative to the axis of rotation of a shaft (not shown). The housing **66** has an inner surface **70** and an outer surface **72**. The inner and outer surfaces **70**, **72** define a bore **74** there through. The bore **74** includes a threaded counterbore **76** as shown in FIG. **4**. The counterbore **76** has a larger diameter than the bore **74** to form a reference mounting surface **78** within the housing **66**. The reference mounting surface **78** may be dimensioned within the bore **74** to properly set the gap between a sensed object **80** and sensor.

[0046] The bore **74** and threaded counterbore **76** may angle perpendicularly within the housing **66** with respect to the sensed object **80**. In other embodiments, the bore **74** and counterbore **76** may be configured at any angle within the housing **66**. As shown, a chamfered surface **82** is located between the counterbore **76** and the outer surface **72**. The bore **74** opens into the interior of the housing **66** while the counterbore **76** opens out of the outer surface **72** via the chamfered surface **82**.

[0047] As shown in FIGS. **4** and **5**, a sensor assembly, generally shown as **84**, of the present disclosure removably connects with the housing **66**. The sensor assembly **84** comprises a threaded fitting **86**, a flexible electrical conduit **88** and a sensor body generally shown as **90** having a first portion **92**, and a second portion **94**. The threaded fitting **86** has an aperture defined there through and further comprises a flanged end **96**, wherein the flanged end **96** extends outward from the fitting **86**. The sensor assembly **84** further has a seal **98** (FIG. **1**). The sensor first portion **92** comprises a flange having a larger diameter than a diameter of the second portion **94** to form a sensor shoulder **100** at the interface of the first portion **92** and second portion **94**. As shown, the second portion **94** positions sensor **102** at an inner end **104**.

[0048] During assembly, the electrical conduit **88** inserts within the aperture of the fitting **86** such that the inside diameter of the fitting aperture has a loose fit over the electrical conduit **88**. The sensor body **90** is positioned within the bore **74** to position sensor shoulder **100** against the referenced mounting surface **78** (FIG. **5**). The fitting **86** is threaded into the threaded counterbore **76** and contacts the flange of the first portion **92**, compressing shoulder **100** against the mounting surface **78**.

[0049] When the sensor shoulder **100** contacts the reference mounting surface **78**, the threaded fitting **86** positions within the counterbore **76** while the sensor second portion **94** positions within the bore **74**. As such, these portions of the sensor assembly **84** are contained within the housing **66**. The

fitting **86** provides a downward clamp force on the sensor shoulder **100**. Furthermore, the sensor second portion **94** positions the sensor **102** opposite an operative surface **106** of the sensed object **80**.

[0050] The seal **98** is radially positioned below the flanged end **96** such that when the fitting **86** is threaded into counterbore **76**, the flanged end **96** provides a seating force against the seal **98**. Now positioned within the bore, the seal **98** isolates the first portion **92** and the second portion **94** of the sensor assembly **84** from the outer surface **72** of the outer race **68**. This isolation by the seal **98**, in combination with contact between the bottom side of the threaded fitting **86** and the upper surface of the sensor shoulder **100**, prevents contaminants from contacting the reference mounting surface **78**. In an embodiment, the seal **98** may comprise an O-ring.

[0051] As shown in FIG. **4**, the fitting **86** may include an annular groove **108**. In one embodiment, the annular groove **108** may be located within the flanged end **96**. A seal **110** is radially positioned within the annular groove **108** to further isolate the reference mounting surface **78** from contaminants such as a liquid that may "wick" down the sensor conduit **88**. The sensor assembly of FIGS. **4-5** results in the sensor mounting surface **78** being positioned below the seal **98** and below the sealing interface between the fitting **86** and sensor shoulder **100** and therefore eliminates corrosion on the sensor mounting surface **78**. Additionally, it eliminates any machining of the sensor pad and simplifies the sensor design by eliminating the sensor attachment flange. Furthermore, this bearing assembly eliminates a capscrew and tapped capscrew hole.

[0052] Turning to FIG. **6**, another embodiment of the present disclosure is shown. This embodiment may incorporate the housing **66** of the embodiment of FIGS. **4-5**. The sensor assembly, generally shown as **116**, of this embodiment also comprises an anti-corrosion member **118** in the form of a seal. In this embodiment, the sensor assembly **116** comprises a first portion **120** and second portion **121**. The first portion **120** may have a larger diameter than a diameter of the second portion **121** to form a sensor shoulder.

[0053] A retaining member **124** in the form of a fastener contacts with a flanged end **126** of sensor assembly **116**. The retaining member **124** applies a seating force against the flanged end **126** to force the flanged end **126** toward outer surface **130** of the housing **66**. In an embodiment, the retaining member **124** comprises a cap screw **127** and an arm member **128** such that the arm member **128** connects the cap screw **127** with the flanged end **126**. The fastener **124** forces the flanged end **126** against anti-corrosion member **118** and compresses it against chamfered surface **132** of the housing **66**. In an embodiment, the seal of the anti-corrosion member **118** may comprise an O-ring.

[0054] Additionally, the retaining member **124** compresses the seal **118** against a counterbore **133** such that the outside vertical surface of the seal **118** intersects the chamfered surface **132** in the counterbore **133**. The chamfered surface **132** must be designed so that when corrosion occurs, the amount of corrosion will not prevent removal of the sensing element. That is to say the first portion **120** will not break the vertical plane of the counterbore **122**.

[0055] The sensor assembly of FIG. **6** results in the sensor shoulder surface being positioned below the seal and therefore eliminates corrosion on the sensor mounting surface. Additionally, it provides sufficient clearance between the arm member **128** and the sensor mounting surface to eliminate effects of corrosion on the outer surface **130**.

[0056] Turning to FIG. **7**, another embodiment at the present disclosure is shown. As shown in FIG. **7**, a housing **136** which may include a bearing assembly that includes outer race **138**, in the form of cup, having a generally cylindrical external surface, wherein the outer race **138** may be stationary relative to a rotating shaft (not shown). In an embodiment, the housing **136** may be incorporated into a suspension system (such as the system partially shown in FIG. **8**) that defines an axis of rotation there through.

[0057] The housing **136** has an inner surface **140** and an outer surface **142**. The housing **136** between its inner and outer surfaces **140** and **142** contains a bore **144** there through. The outer race **138** has a pair of raceways **146**, which face toward the axis "X" of rotation. In an embodiment, the bore **144** may angle obliquely within the housing **136**. In other embodiments, the bore **144** may angle at any angle within the housing **136**. The bore **144**, at one end, opens into the interior **148** of the housing **136** while the bore **144**, at another end, opens out of the outer surface **142**. The bore **144** may lie within the thickest portion of the outer race **138** and indeed exist not only in the region between the inner and outer surfaces **140**, **142**, but also within a boss **150** that projects from the generally cylindrical outer surface **142** of the outer race **138**.

[0058] The bearing assembly further comprises an inner race **152** in the form of a cone, which is rotatable relative to the outer race **138**. The inner race **152** contains respective raceways **154**. In addition to the raceways **154**, the bearing assembly has a complement of rolling elements **156** in the form of rollers. The rolling elements **156** are located between and contact the inner race **152** and the outer race **138**. The rolling elements **156** are confined within cages, which distribute the rolling element **156** uniformly in the row and thereby maintain the proper spacing between the rolling element **156**. They also retain the rolling elements **156** around the inner race **152** when the inner race **152** is withdrawn from the outer race **138**. The rolling elements **156** transmit thrust and radial loads between the outer race **138** and the inner race **152**, while reducing friction to a minimum.

[0059] A sensor assembly, generally shown as **158**, of the present disclosure removably mounts within the housing **136** (FIG. **7**). The sensor assembly **158** comprises a sensor body **160**, which has a first portion **162** and a second portion **164**; a sensing element **166**; conduit **168**; a strain relief member **170**; an anti-corrosion member **172** and a retaining member **174**. The first portion **162** includes a flanged end **176** positioned outside the housing **136** wherein the flanged end **176** radially extends outward from the first portion **162** and over portions of the outer surface **142** of the housing **136**. The first portion **162** is positioned within the bore **144** and partially extends beyond the outer surface **142** of the housing **136**. The flanged end **176** has an anti-rotation member **178** downwardly extending from an end of the flanged end **176**. The first portion **162** positions the flexible electrical conduit **168**, which emerges from the strain relief member **170**, outside of the housing **136** to prevent ingress of contaminants into components of the first portion **162**.

[0060] The second portion **164** positions the sensing element **166** at an inner end **180**. The inner end **180** is positioned opposite an operative surface **182** of a sensed object **184**. In this illustrative example, the sensed object **184** may comprise a target wheel.

[0061] The first portion **162** further includes an annular groove **186** located between the flanged end **176** and the inner end **180** of the second portion **164**. A seal **188** is radially positioned within the annular groove **186** such that the seal **188** isolates the second portion **164** of the sensor assembly **158** from the outer surface **142** of the housing **136**. This isolation by the seal **188** prevents contaminants from contacting the second portion **164** and the sensing element **166**. In an embodiment, the seal **188** may comprise an O-ring.

[0062] The anti-corrosion member **172** in the form of a sleeve comprises an annular body **190** having an outer lip **192** wherein the outer lip **192** includes a sleeve anti-rotation member **194** in the form of a flat side (FIGS. **9** and **10**). The sleeve anti-rotation member **194**, however, is not limited to a flat side but may comprise other retention means such as but not limited to a tab and a protrusion. The anti-corrosion member **172** is positioned within the bore **144** and extends partially beyond the outer surface **142** of the housing **136** (FIG. **7**). As shown, the anti-corrosion member **172** further contacts the sensor body **160**.

[0063] The anti-corrosion member **172** press fits partially within the bore **144** and extends partially beyond the outer surface **142** (FIG. **7**). When press fit within the bore **144**, a portion of the annular body **190** surrounds a portion of the first portion **162** and the annular groove **186**. Additionally, a top of the outer lip **192** positions against a bottom of the flanged end **176** to form a sensor interface **196** between the top of the outer lip **192** and the bottom of the flanged end **176**. The insertion of the anti-corrosion member **172** and the interface **196** between the flanged end **176** and the outer lip **192** controls a gap **198** between the sensing element **166** and the operating surface **182** of the sensed object **184**. When inserted into the bore **144**, the anti-corrosion member **172** also prevents ingress of contaminants within the bore **144**. Furthermore, the seal **188** is positioned between the inner diameter of the anti-corrosion member **172** and the outer diameter of the second portion **164** to further assist prevention of contamination ingress. The anti-corrosion member **172** may comprise any suitable material such as but not limited to plastic, steel or brass.

[0064] When press fit into the bore **144**, the anti-corrosion member **172** positions the outer lip **192** and associated sleeve anti-rotation member **194** outside of the housing **136** (FIG. **7**). As noted, the outer lip **192** abuts the bottom of the flanged end **176** of the first portion **162** such that the sleeve anti-rotation member **194** abuts the anti-rotation member **178** of the flanged end **176**. In this configuration, the second portion **164** cannot rotate within the bore **144** since the sleeve anti-rotation member **194** and the anti-rotation member **178** prohibit movement of the second portion **164**.

[0065] The retaining member **174** (FIGS. **7**, **8**, **11** and **12**) comprises a first side member **200**, a second side member **202**, a back member **204** and a channel **206**. The retaining member **174** removeably fasters to the first portion **162** and contacts the anti-corrosion member **172**. The retaining member **174** retains the anti-corrosion member **172** against the first portion **162** such that the anti-corrosion member **174** isolates the sensing element **166** from the outer surface to prevent contaminants from contacting the sensing element **166**. The back member **204** spaces apart the first side member **200** and second side member **202**. As such, the channel **206** is disposed within the first side member **200**, the second side member **202** and the back member **204**. The channel **206** allows convenient insertion of the retaining member **174** from the top side of the first portion **162**. As shown in FIG. **11**, the channel **206** is configured to position around a portion of the first portion **162** at a location adjacent to and on top of the flanged end **176**.

[0066] Each first side member **200** and second side member **202** has a curved portion **208**, a leg portion **210** and a bias member **212** (FIG. **12**). The curved portion **208** extends outwardly from the back member **204** and around the flanged end **176**. The leg portions **210** extend downwardly from the curved portions **208** and beyond the flanged end **176**. The bias members **212** upwardly extend at an angle from the leg portions **210**. The bias members **212** contact a bottom of the outer lip **192** of the anti-corrosion member **172** at a position opposite the flanged end **176** wherein the bias members **212** retain the anti-corrosion member **172** against the flanged end **176** (FIGS. **7** and **12**). In this position, the retaining member also retains the anti-rotation member of the flanged end **176** against the sleeve anti-rotation member **194**.

[0067] The bias members **212** contact the anti-corrosion member **172** to provide retention of the sensor assembly **158** within the bore **144**. The bias members **212** retain the flanged end **176** against the outer lip **192** of the anti-corrosion member **172** to provide sensor retention within the anti-corrosion member **172**. Furthermore, when the anti-rotation member **178** aligns against the sleeve anti-rotation member **194**, the bias members **212** maintain the orientation of the second portion **164** within the bore **144**. Due to the bias members **212**, the retaining member **174** maintains a tight fit between the flanged end **176** and the outer lip **192** of the anti-corrosion member **172** to prevent ingress of contaminants between the outer lip **192** and the flanged end **176**.

[0068] FIGS. **13-19** illustrate another embodiment of a sensor assembly, generally shown as **214**, of the present disclosure. In this embodiment, the sensor assembly **214** removably mounts within housing **216**, which is similar to housing **136** disclosed in FIG. **7**. As shown in FIG. **13**, the sensor assembly **214** comprises a sensor body **218**, which includes a first portion **220** and a second portion **222**; a sensing element (not shown); conduit **224**; a strain relief member **226**; a corrosion resistant sleeve **228** and a retaining member **230**. The first portion **220** is positioned within the bore and partially extends beyond the outer surface at the housing **216**. The first portion **220** includes a flanged end **232** (FIGS. **13**, **14** and **15**) positioned outside the housing **216** that radically extends outward from the first portion **220** and over portions of the outer surface of the housing **216**. The flanged end **232** has an anti-rotation member **234** (FIGS. **14-16**) extending from an end of the flanged end **232**. The first portion **220** positions the flexible electrical conduit **224**, which emerges from the strain relief member **226**, outside of the housing **216** to prevent ingress of contaminants into components of the first portion **220**. The second portion **222** positions the sensing element at an inner end (not shown). The inner end is positioned opposite an operative surface (not shown) of a sensed object (not shown) as previously discussed.

[0069] The first portion **220** further includes an annular groove **236** located between the flanged end **232** and the inner end of the second portion **222**. A seal **238** is radially positioned within the annular groove **236** such that the seal **238** isolates the second portion **222** of the sensor assembly **214** from the outer surface of the housing **216**. This isolation by the seal **238** prevents contaminants from contacting the second portion **222** and the sensing element. In an embodiment, the seal **238** may comprise an O-ring.

[0070] The anti-corrosion member **228** (FIG. **13**) in the form of a sleeve comprises an annular body **240** having an outer lip **242**. The outer lip **242** may include a sleeve anti-rotation member (not shown) in the form of a flat side as previously discussed. This sleeve anti-rotation member, however, is not limited to a flat side but may comprise other retention means such as but not limited to a tab and a protrusion. The anti-corrosion member **228** press fits partially within the **244** of the housing **216** and extends partially beyond the outer surface of the housing **216** to provide an interference fit between the annular body **240** and the bore **244**. The anti-corrosion member **228** prevents ingress of contaminants within the bore **244**. When press fit within the bore **244**, a portion of the annular body **240** surrounds a portion of the second portion **222** and the annular groove **236**. Additionally, a top of the outer lip **242** positions against a bottom of the flanged end **232** to form a sensor interface **246** between the top of the outer lip **242** and the bottom of flanged end **232**. The insertion of the anti-corrosion member **228** and the interface **246** between the flanged end **232** and outer lip **242** controls the gap between the sensing element and the operating surface of the sensed object as previously discussed. Furthermore, the seal **238** is positioned between the inner diameter of the anti-corrosion member **228** and the outer diameter of the second portion **222** to further assist prevention of contamination ingress. The anti-corrosion member **228** may comprise any suitable material such as but not limited to plastic, steel or brass.

[0071] When press fit into the bore **244**, the anti-corrosion member **228** positions the outer lip **242** outside of the housing **216** (FIG. **13**). As shown, the outer lip **242** abuts the bottom of the flanged end **232** of the first portion **220**. As previously discussed, the sleeve anti-rotation member of the outer lip **242** abuts against the anti-rotation member **234**. In this configuration, the second portion **222** cannot rotate within the bore **244** since the sleeve anti-rotation member and the anti-rotation member **234** prohibits movement of the second portion **222**.

[0072] The retaining member **230** (FIGS. **13-14**, **17-19**) comprises a first side member **248**, a second side member **250**, a back member **252** and a channel **254**. The back member **252** spaces apart the first side member **248** and second side member **250**. As such, the channel **254** is disposed within the first side member **248**, the second side member **250** and the back member **252**. The channel **254** allows convenient insertion of the retaining member **230** from the side of the first portion **220**. As shown in FIG. **14**, the channel **254** is configured to position around a portion of the first portion **220** (FIG. **13**) at a location adjacent to and on top of the flanged end **232**.

[0073] Each first side member **248** and second side member **250** has a curved channel **256** (FIGS. **17** and **18**). Each curved channel **256** extends from the respective members **248**, **250** and into the channel **254**. Additionally, each curved channel **256** includes an upper bias member **258** and a lower bias member **260** (FIG. **19**). The upper bias member **258** contacts the top of the flanged end **232** while the lower bias member **260** contacts the bottom of the outer lip **242** of the anti-corrosion member **228** (FIG. **13**). When fully assembled, the curved channel **256** engages with the outer diameter of the flanged end **232** (FIG. **14**). The curved channels **256** further include flared ends **262** (FIGS. **14**, **17** and **18**). The flared ends **262** allow the user to easily insert the retaining member **230** to engage the retaining member **230** with the anti-corrosion member **228** and the flanged end **232**. In this position, the retaining member **230** also retains the anti-rotation member of the flanged end against the sleeve anti-rotation member.

[0074] The bias members **260** contact the anti-corrosion member **228** to provide retention of the sleeve assembly **214** within the bore **244** (FIG. **13**). Further, as shown, the bias members **258** retain the flanged end **232** against the outer lip **242** of the anti-corrosion member **228** to provide sensor retention within the anti-corrosion member **228**. Furthermore, when the anti-rotation member **234** aligns against the sleeve anti-rotation member of the sleeve anti-corrosion member **228**, the bias members **258**, **260** maintain the orientation of the second portion **222** within the bore **244**. Due to the bias members **258**, **260**, the retaining member **230** maintains a tight fit between the flanged end **232** and the outer lip **242** of the anti-corrosion member **228** to prevent ingress of contaminants between the outer lip **242** and the flanged end **232**.

[0075] The sensor assemblies of FIGS. **1-19** eliminate corrosion on the reference sensor interface. Additionally, these sensor assemblies eliminate the need for machining of any sensor pad and simplify the sensor design by eliminating any attachment flange. In the embodiments, the present disclosure provides sensors, which are robust against environmental effects such as corrosion and are easily serviceable. The sensor reference interface between the sensor portion and the sleeve is robust to corrosion or other environmental effects. The disclosure provides various means for attaching the sensor assembly to the particular housing, means for controlling the position of the sensing element relative to the sensed object and means for preventing contamination ingress to bearings. Furthermore, as previously mentioned, the sensor assembly of the present disclosure may be used for a variety of sensor technologies. For illustrative purposes, the sensor assembly was shown with a bearing arrangement wherein the sensor assembly may be used with all bearing types such as but not limited to tapered roller bearings, double row bearings, and indeed on other types of antifriction bearings such as but not limited to plain ball bearings, angular contact ball bearings, spherical roller bearings, angular contact bearings and cylindrical roller bearings.

[0076] In view of the above, it will be seen that the several objects of the disclosure are achieved and other advantageous results are obtained. As various changes could be made in the above constructions without departing from the scope of the disclosure, it is intended that all matter contained in the above description or shown in the accompanying drawings shall be interpreted as illustrative and not in a limiting sense.

1. A sensor assembly that has a sensing element mountable in a housing, the housing having an inner surface, an outer surface, a bore disposed there through and having a sensed object positioned across a gap from the sensing element, the sensor assembly, comprising:

a sensor body having a first portion and a second portion, the first portion and second portion being positioned within the bore, the second portion positioning the sensing element at an end of the second portion;

an anti-corrosion member positioned within the bore to isolate the second portion from the outer surface; and

a retaining member removably fastened to the sensor body to apply a force to the anti-corrosion member such that the anti-corrosion member isolates the sensing element from the outer surface to prevent contaminants from contacting the sensing element.

2. The sensor assembly of claim **1** wherein the retaining member is in contact with the anti-corrosion member such that the retaining member retains the anti-corrosion member against the sensor body.

3. The sensor assembly of claim **1** wherein the bore of the housing includes a counterbore such that an interface of the counterbore and the bore forms a reference mounting surface within the housing and wherein an outer diameter of the first portion of the sensor body is larger than an outer diameter of the second portion of the sensor body to form a sensor shoulder at the interface of the first portion and the second portion such that the sensor shoulder contacts the reference mounting surface when the sensor body mounts within the housing.

4. The sensor assembly of claim **1** wherein the first portion includes an annular groove and includes a seal positioned within the annular groove such that the seal isolates the second portion from the outer surface of the housing to prevent contaminants from contacting the second portion.

5. The sensor assembly of claim **4** wherein the anti-corrosion member comprises a sleeve that partially extends beyond the outer surface of the housing while being in contact with the sensor body.

6. The sensor assembly of claim **5** wherein the sleeve surrounds the seal.

7. The sensor assembly of claim **1** further comprising a flanged end that radially extends outward from the first portion and over portions of the outer surface.

8. The sensor assembly of claim **7** wherein the retaining member comprises at least one side portion, the side portion having an aperture defined there through wherein the aperture removably engages with the flanged end of the first portion.

9. The sensor assembly of claim **7** wherein the flanged end includes an anti-rotation member extending toward the outer surface of the housing.

10. The sensor assembly of claim **9** wherein the anti-corrosion member comprises a sleeve having an annular body, an outer lip and a sleeve anti-rotation member.

11. The sensor assembly of claim **10** wherein the annular body of the sleeve is positioned partially within the bore and extending partially beyond the outer surface to position a top of the outer lip against a bottom of the flanged end to form an interface between the top of the outer lip and the bottom of the flanged end such that the gap between the sensing element and an operating surface of the sensed object is controlled by the positioning of the sleeve within the bore and the positioning of the resultant interface between the outer lip and the flanged end.

12. The sensor assembly of claim **11** wherein the retaining member retains the outer lip against the bottom of the flanged end such that the anti-rotation member of the flanged end contacts the sleeve anti-rotation member.

13. The sensor assembly of claim **12** wherein the retaining member has curved portions, legs extending from the curved portions and bias members extending from the legs.

14. The sensor assembly of claim **13** wherein the curved portions and legs contact the flanged end and the bias members engage a bottom of the outer lip wherein the bias members retain the sleeve against the flanged end.

15. The sensor assembly of claim **12** wherein the retaining member has curved channels, each curved channel having an upper bias member and a lower bias member wherein the upper bias member engages a top of the flanged end and the lower bias member engages a bottom of the outer lip of the sleeve such that the bias members retain the sleeve against the flanged end.

16. (canceled)
17. (canceled)
18. (canceled)
19. (canceled)
20. (canceled)
21. (canceled)
22. (canceled)
23. (canceled)
24. (canceled)
25. (canceled)
26. (canceled)
27. (canceled)
28. (canceled)
29. (canceled)
30. (canceled)
31. (canceled)
32. (canceled)

33. A sensor assembly mountable in a housing, the housing having an inner surface, an outer surface, a bore disposed there through, the bore includes a counterbore such that an interface of the counterbore and the bore forms a reference mounting surface within the housing and the housing having a sensed object positioned across a gap from the sensing element, the sensor assembly, comprising:

a sensor body having a first portion and a second portion, the first portion being positioned within the bore and the second portion being positioned within the bore, wherein an outer diameter of the first portion of the sensor body is larger than an outer diameter of the second portion of the sensor body to form a sensor shoulder at the interface of the first portion and the second portion such that the sensor shoulder contacts the reference mounting surface when the sensor body mounts within the housing; and

an anti-corrosion member positioned within the counterbore, the anti-corrosion member further being in contact with the sensor body such that the anti-corrosion member isolates the second portion from the outer surface of the housing to prevent contaminants from contacting the second portion.

34. The sensor assembly of claim **33** further comprising a flanged end that radially extends outward from the first portion and over portions of the outer surface.

35. The sensor assembly of claim **34** further comprising a retaining member removably fastened to the flanged end wherein the retaining member retains the flanged end against the outer surface of the housing.

* * * * *