US007442195B1

(12) **United States Patent**
Behrens

(10) **Patent No.: US 7,442,195 B1**
(45) **Date of Patent: Oct. 28, 2008**

(54) **APPARATUS AND METHOD FOR THE REDUCTION OF BONE FRACTURES**

(76) Inventor: **Alfred F. Behrens**, One Harwood Dr., Madison, NJ (US) 07940-2710

(*) Notice: Subject to any disclaimer, the term of this patent is extended or adjusted under 35 U.S.C. 154(b) by 331 days.

(21) Appl. No.: **11/224,166**

(22) Filed: **Sep. 12, 2005**

(51) **Int. Cl.**
A61F 5/00 (2006.01)
A61B 17/00 (2006.01)

(52) **U.S. Cl.** ..... **606/86 A**; 606/167; 30/346

(58) **Field of Classification Search** ..... 606/82, 606/80, 81, 83, 84, 85, 99, 169, 179, 170, 606/178, 86 A; 30/346, 348, 353, 346.57
See application file for complete search history.

(56) **References Cited**

U.S. PATENT DOCUMENTS

4,969,888 A 11/1990 Scholten et al.
5,102,413 A 4/1992 Poddar
5,108,404 A 4/1992 Scholten et al.
5,383,888 A * 1/1995 Zvenyatsky et al. 606/206
5,549,637 A * 8/1996 Crainich 606/207
5,702,408 A * 12/1997 Wales et al. 606/139
5,722,977 A * 3/1998 Wilhelmy 606/84
5,972,015 A 10/1999 Scribner et al.
6,066,154 A 5/2000 Reiley et al.
6,679,886 B2 * 1/2004 Weikel et al. 606/79
6,726,691 B2 4/2004 Osorio et al.
6,923,813 B2 * 8/2005 Phillips et al. 606/86

* cited by examiner

Primary Examiner—Pedro Philogene
(74) *Attorney, Agent, or Firm*—Arthur Jacob

(57) **ABSTRACT**

Reduction of a bone fragment of a bone fracture at a bone fracture site is accomplished through a minimally invasive access passage utilizing instruments having a working head actuated from a location remote from the bone fracture site, between an insertion configuration dimensioned and configured to present a minimal cross-sectional area for ready passage through the minimally invasive access passage and a working configuration dimensioned and configured to establish an essentially rigid working face of substantially greater cross-sectional area than the minimal cross-sectional area. The working head is actuated into the working configuration and manipulated from the remote location while in the working configuration to engage the working face with the bone fragment and manipulate the bone fragment into an anatomically appropriate reduced position at the bone fracture site.

20 Claims, 17 Drawing Sheets

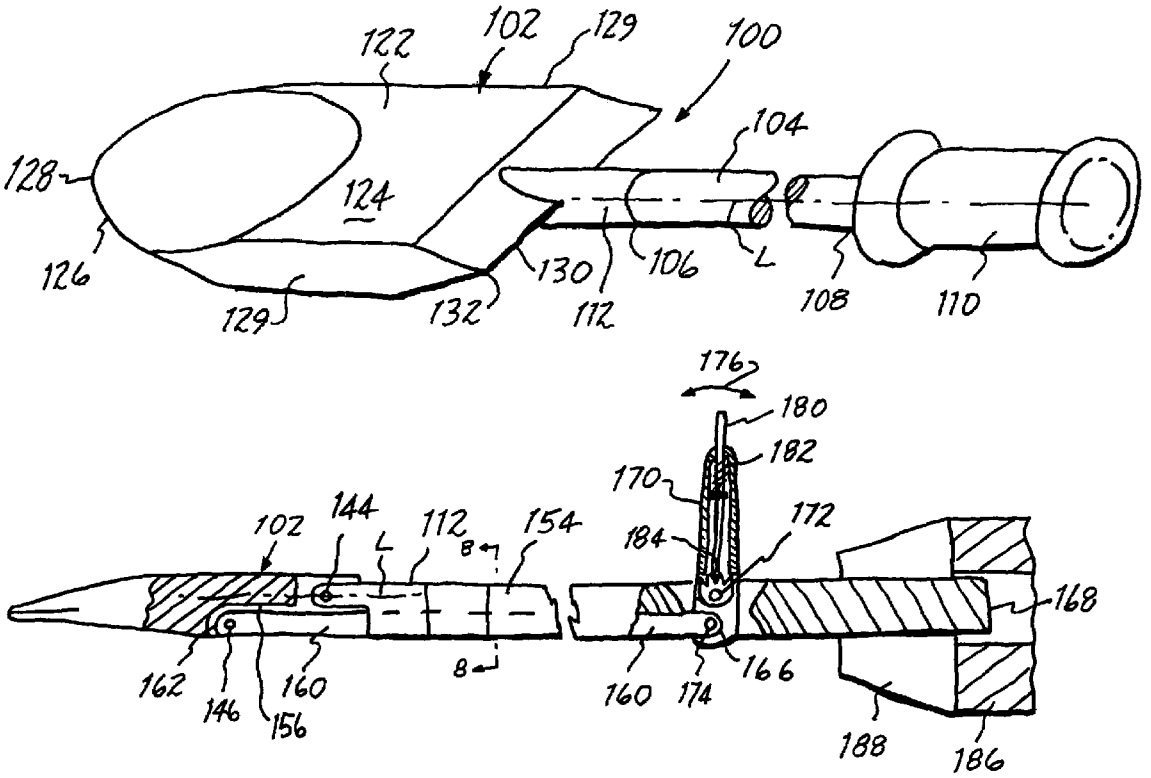

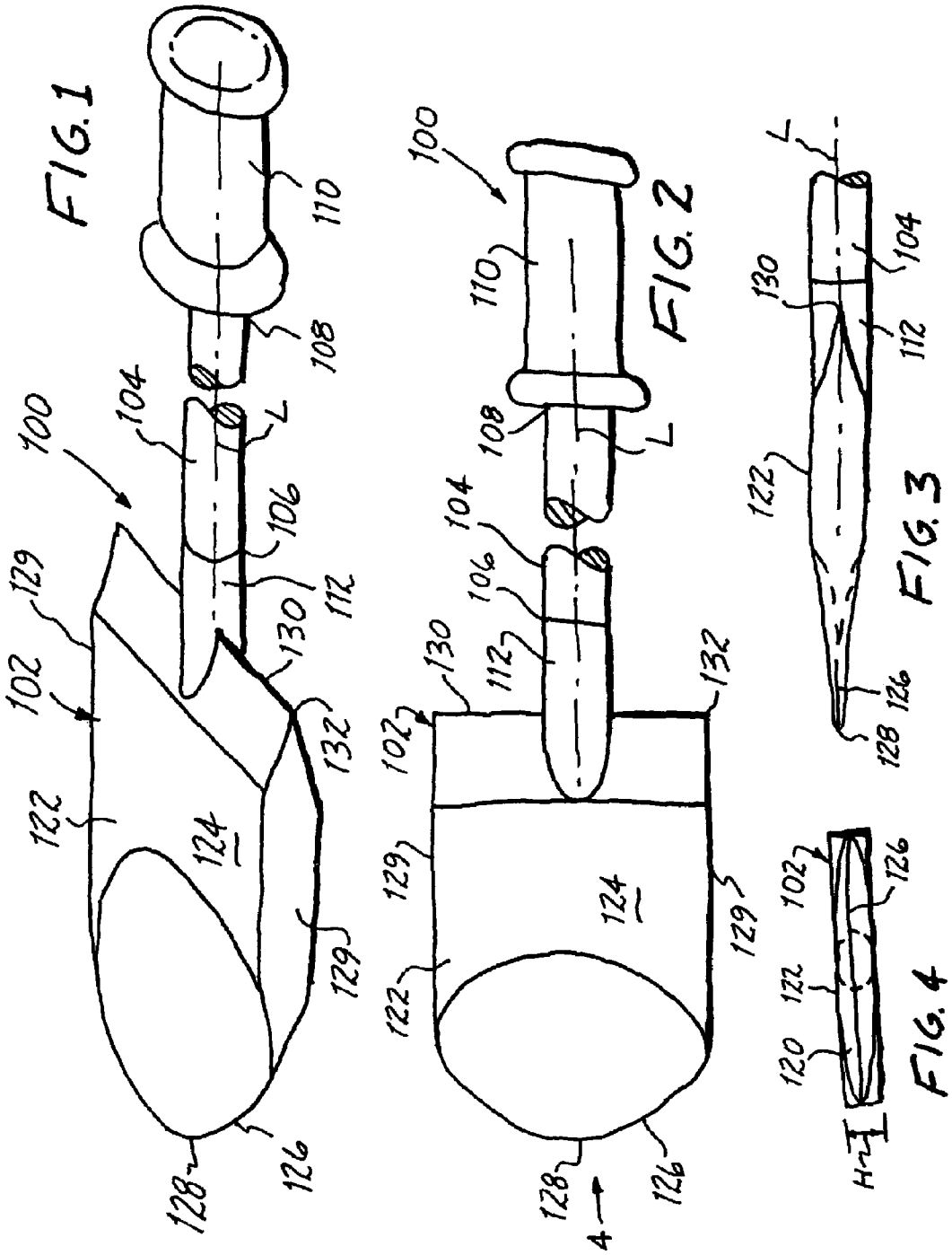
FIG. 1
FIG. 2
FIG. 3
FIG. 4
100
102
104
106
108
110
112
120
122
124
126
128
129
130
132
L
H
4

FIG. 5

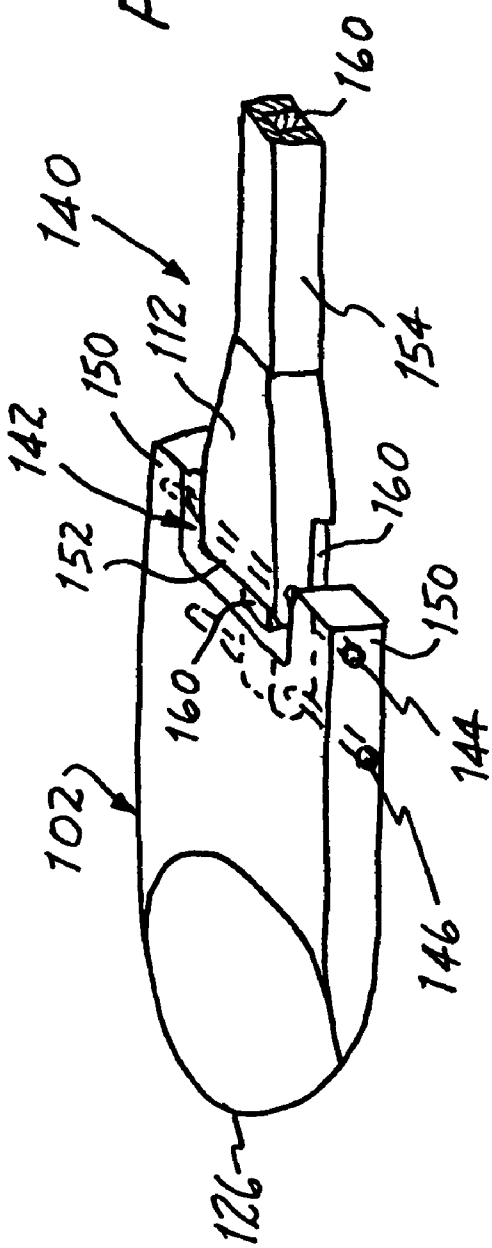
140
160
112
150
142
154
152
160
160
150
144
102
146
126

FIG. 6

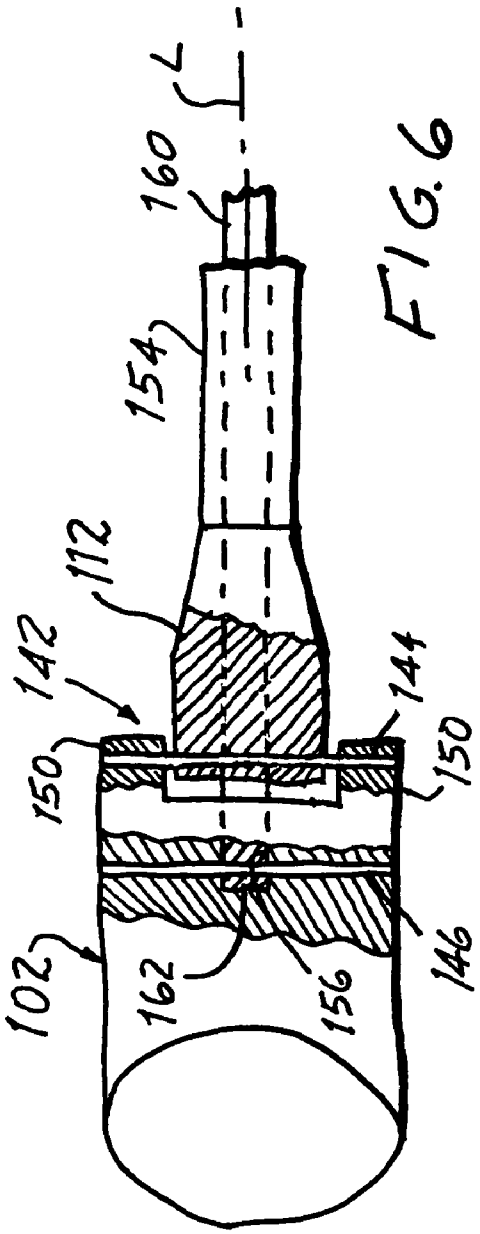
L
160
154
112
142
144
150
150
102
162
156
146

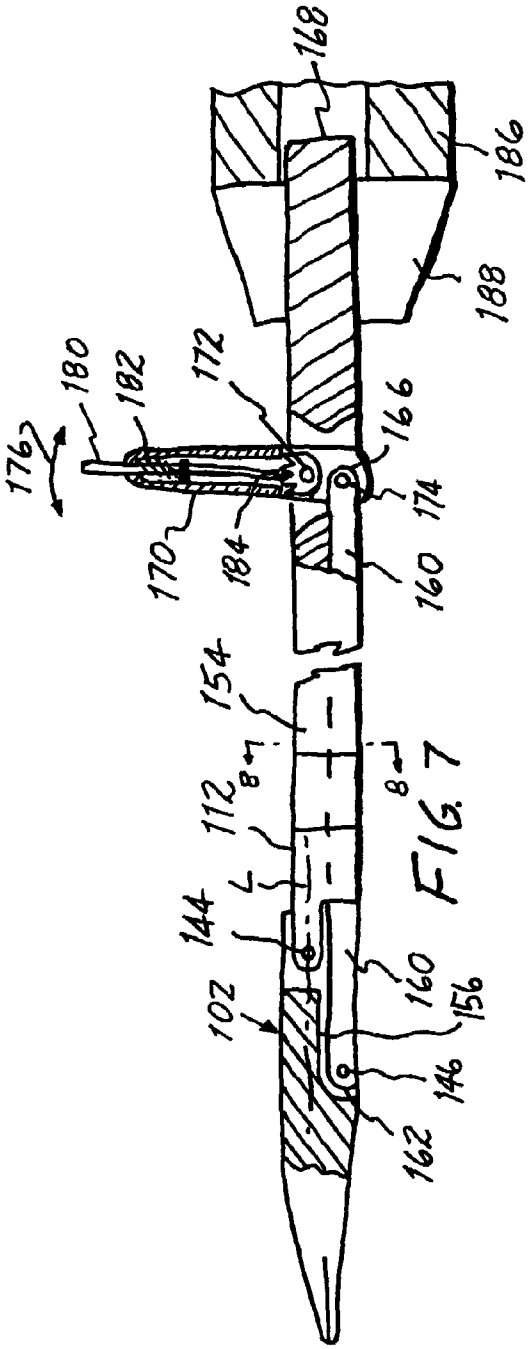

FIG. 7

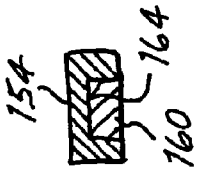

FIG. 8

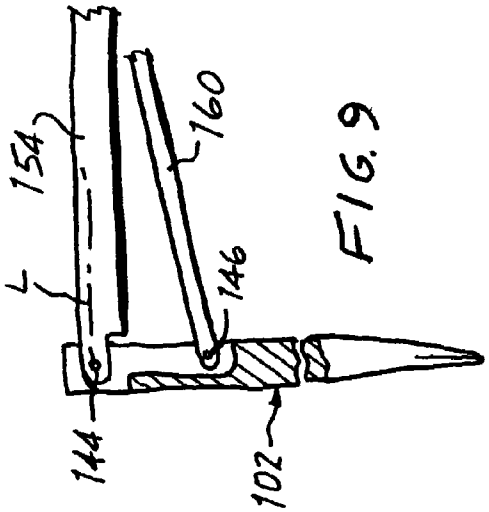

FIG. 9

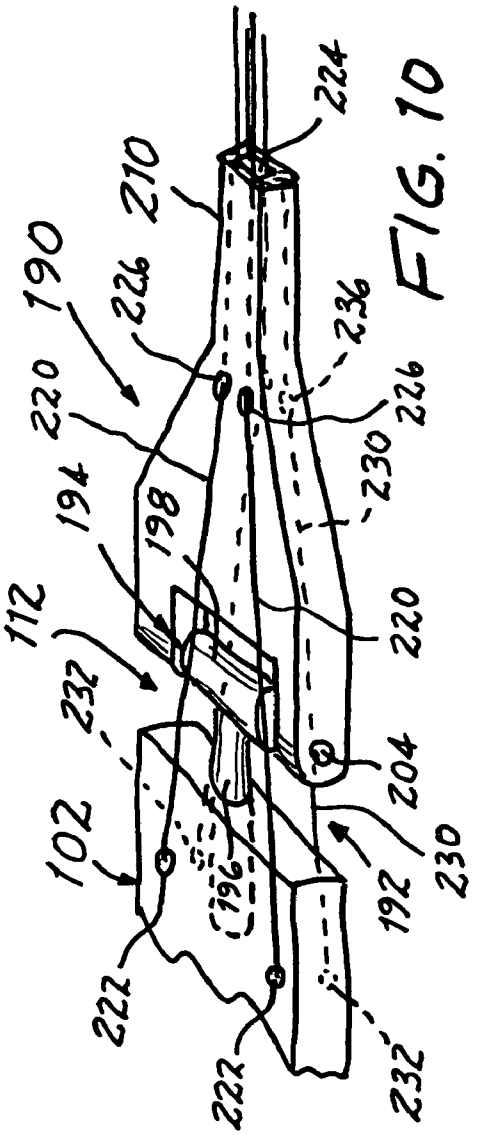
190
210
224
226
220
236
226
230
194
198
112
220
232
102
204
230
196
192
222
222
232

FIG. 10

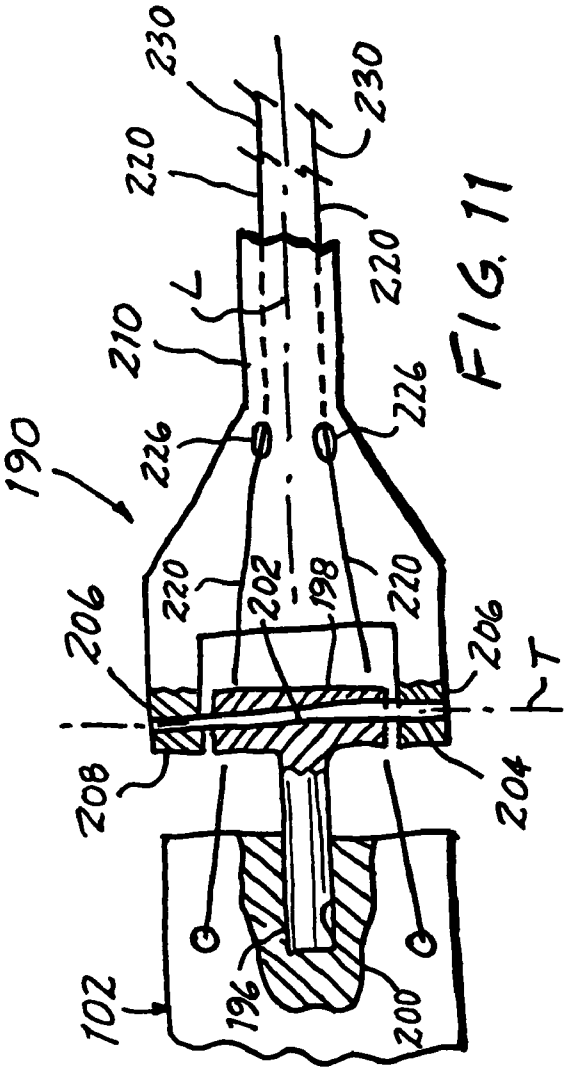
230
230
220
220
L
210
226
226
190
220
202
198
220
206
206
T
208
204
102
196
200

FIG. 11

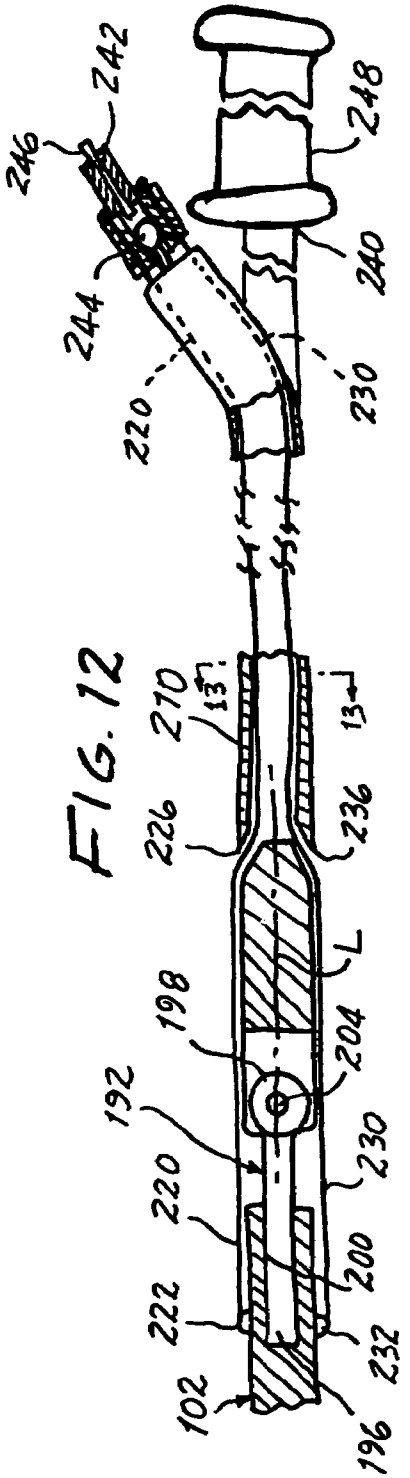

FIG. 12

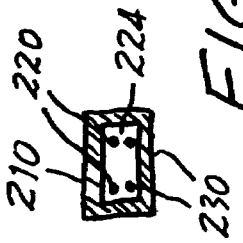

FIG. 13

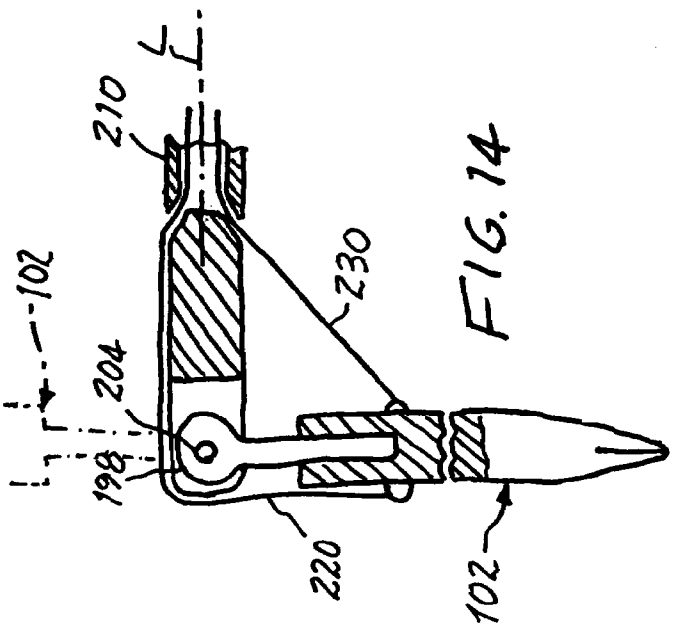

FIG. 14

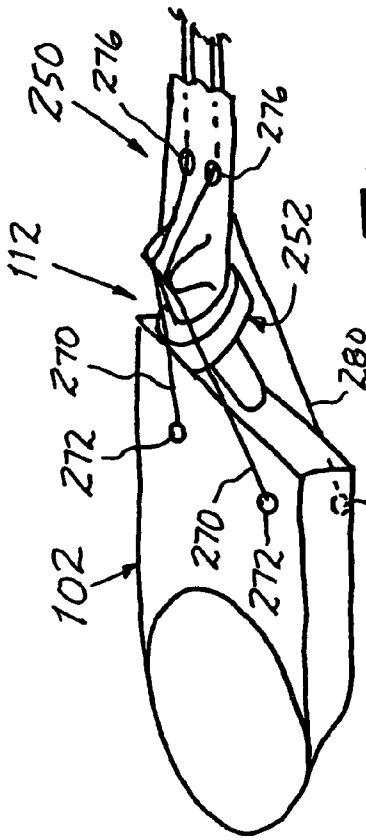
250
276
276
112
252
270
280
272
282
270
102
272

FIG. 15

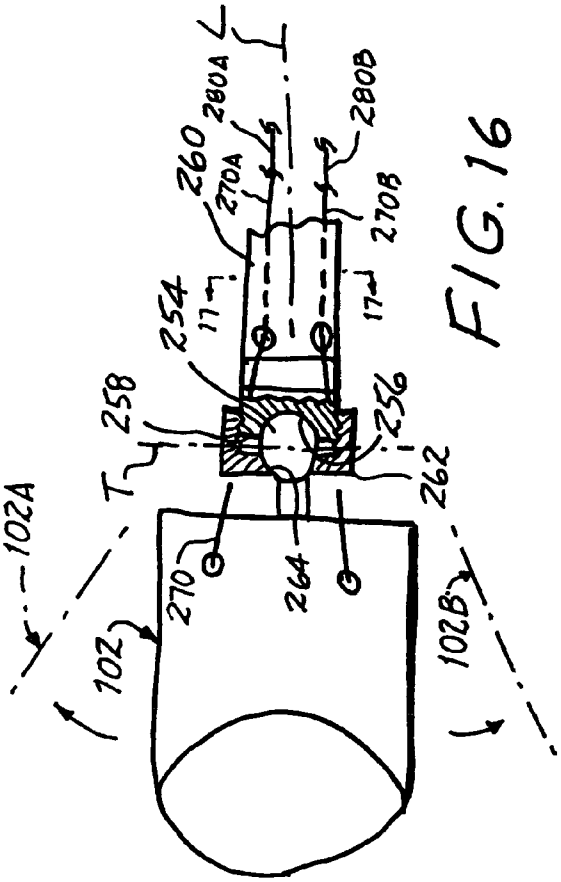
280A
260
280B
270A
270B
254
17
17
258
256
T
262
102A
270
264
102
102B

FIG. 16

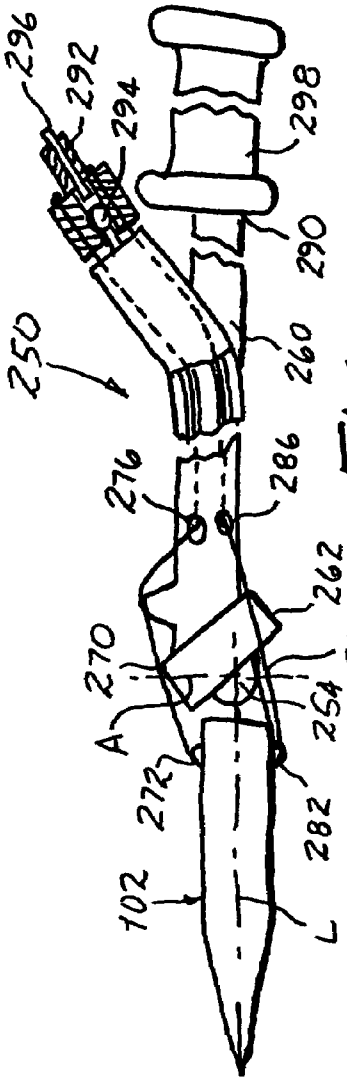

FIG. 18

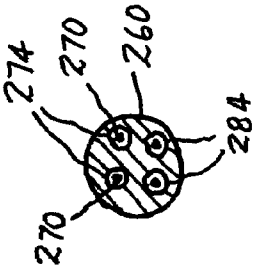

FIG. 17

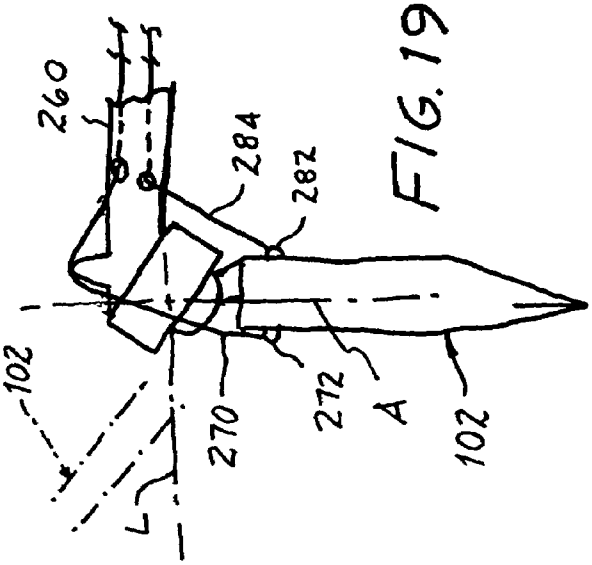

FIG. 19

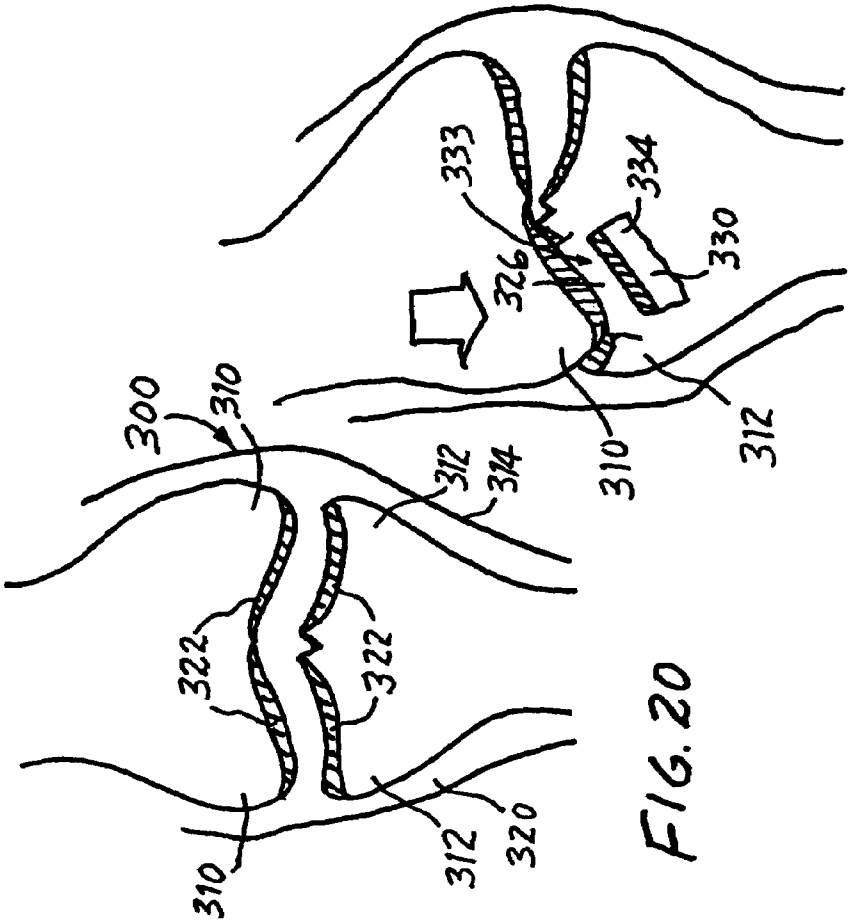

FIG. 20

FIG. 21

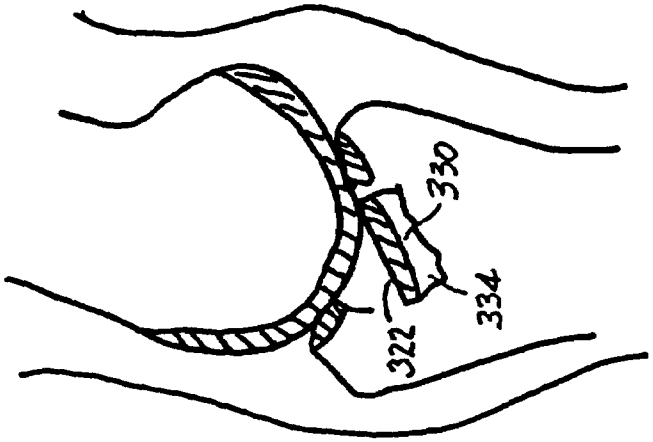

FIG. 22

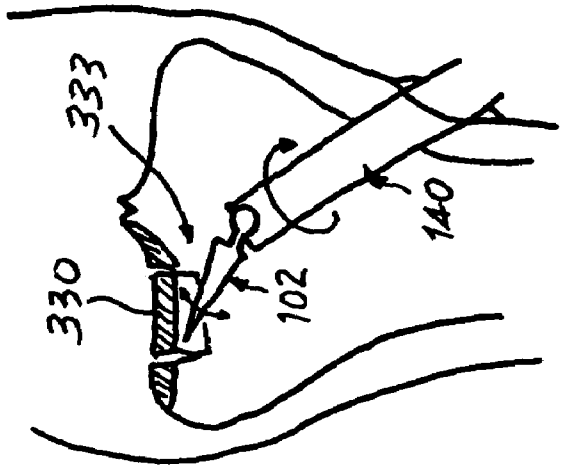

FIG. 25

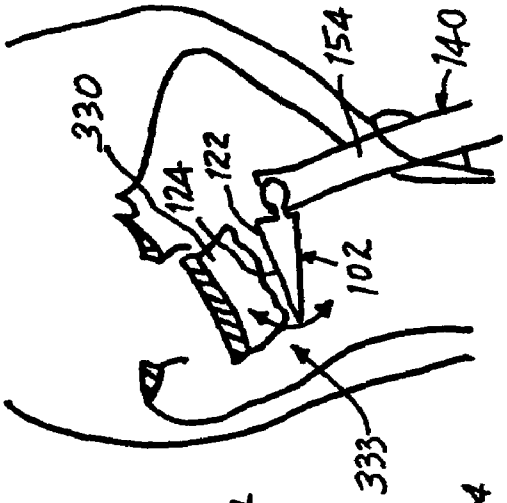

FIG. 24

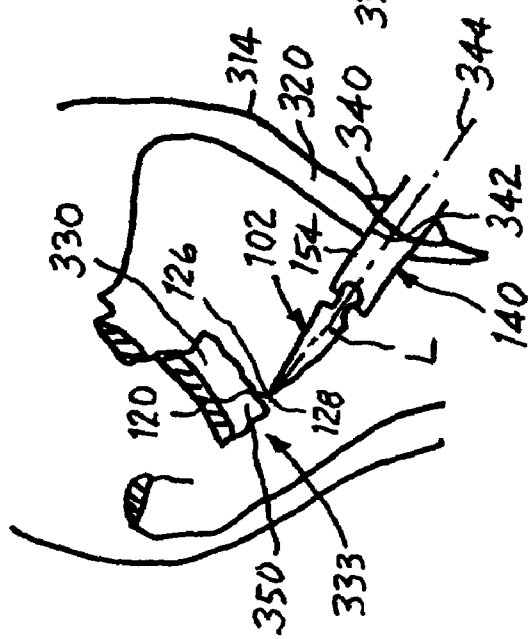

FIG. 23

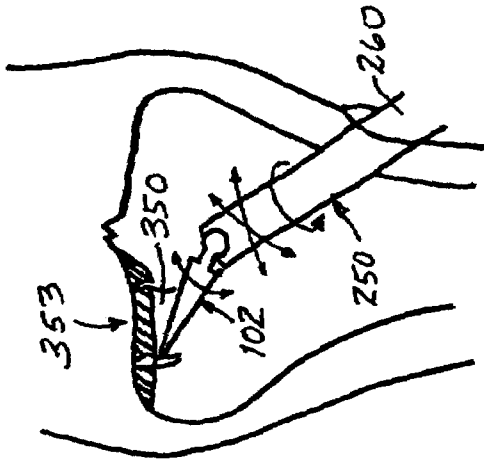

FIG. 28A

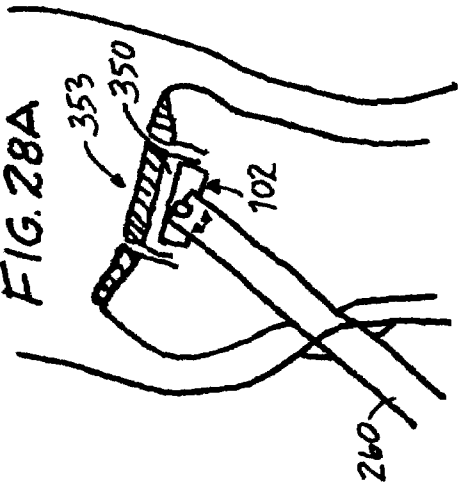

FIG. 28B

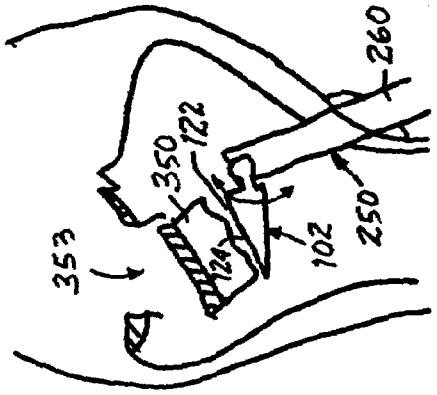

FIG. 27A

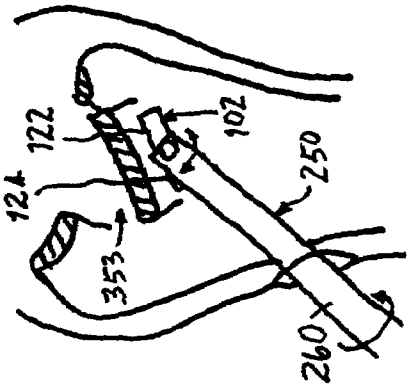

FIG. 27B

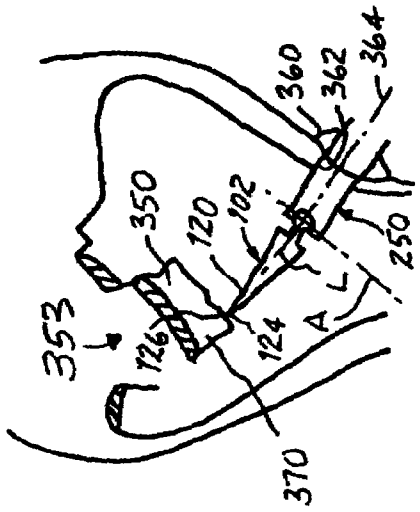

FIG. 26A

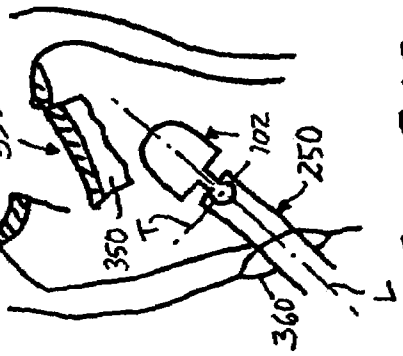

FIG. 26B

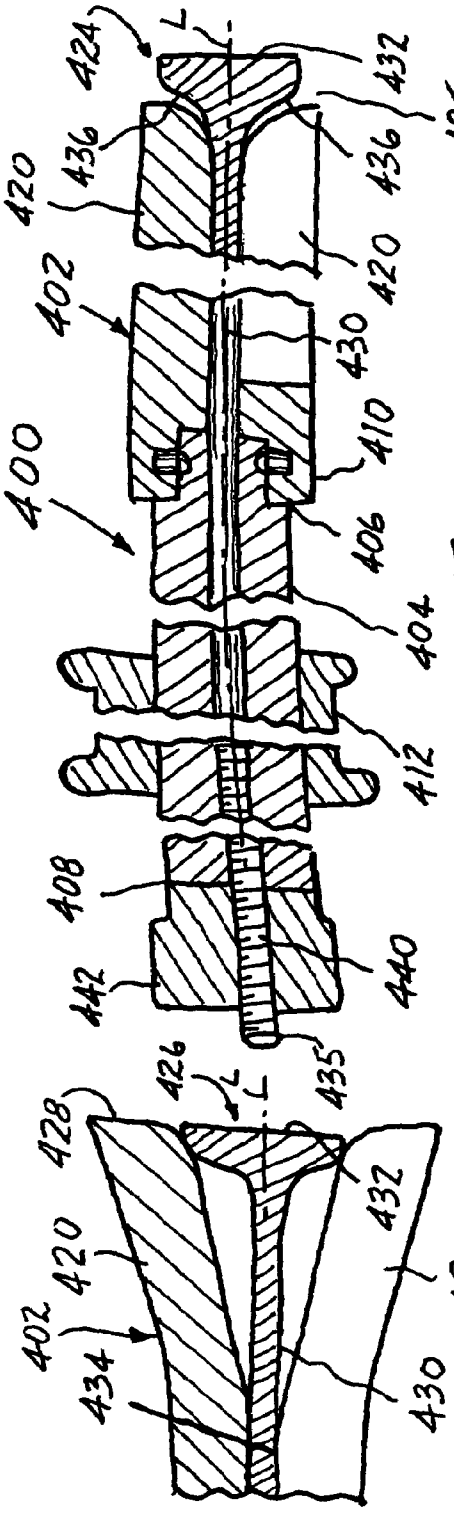

FIG. 29

FIG. 32

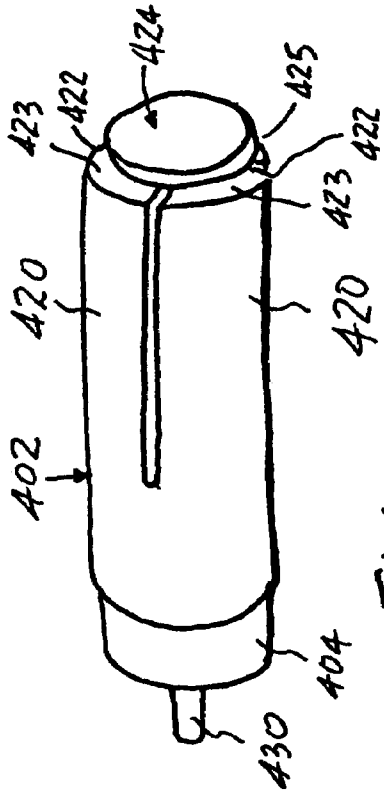

FIG. 30

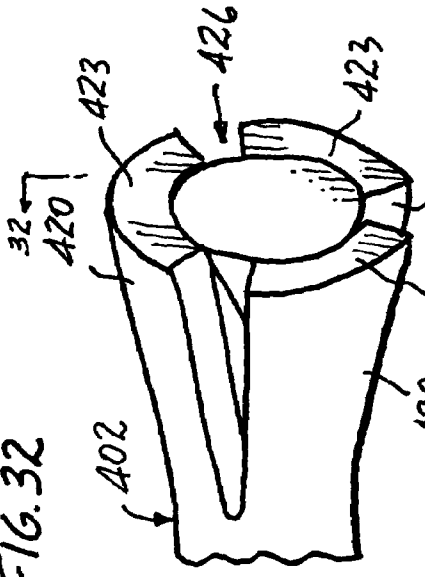

FIG. 31

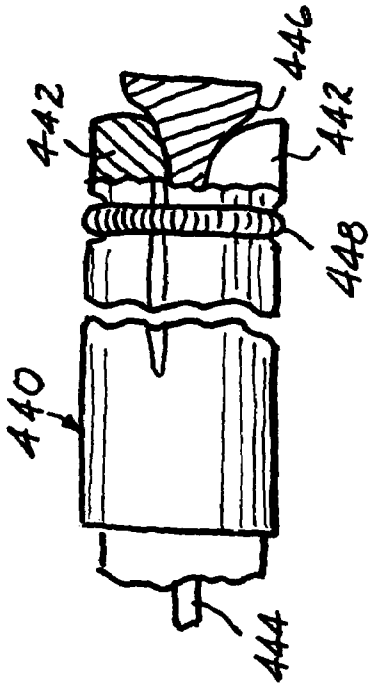

FIG. 33

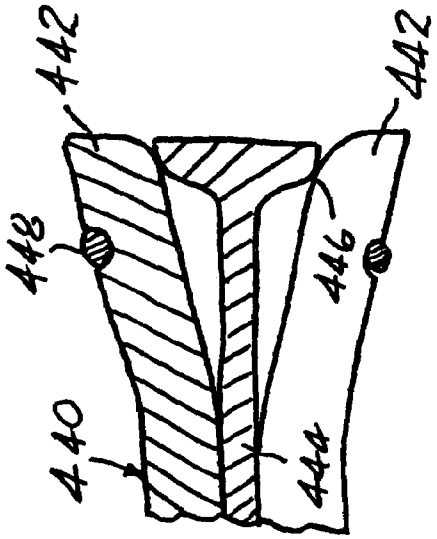

FIG. 34

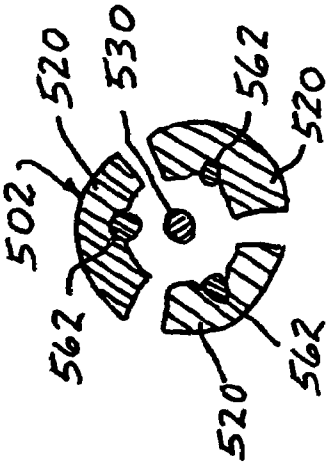

FIG. 37

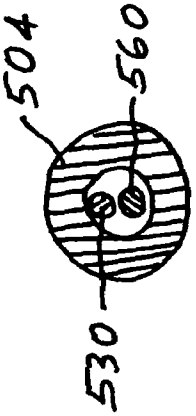

FIG. 36

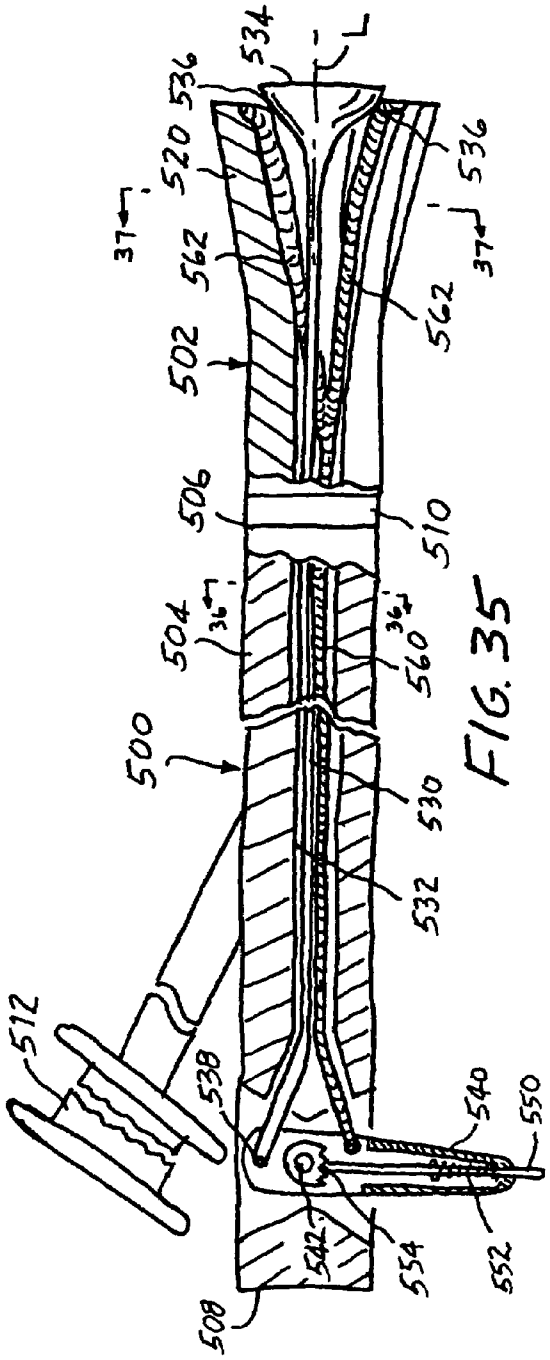

FIG. 35

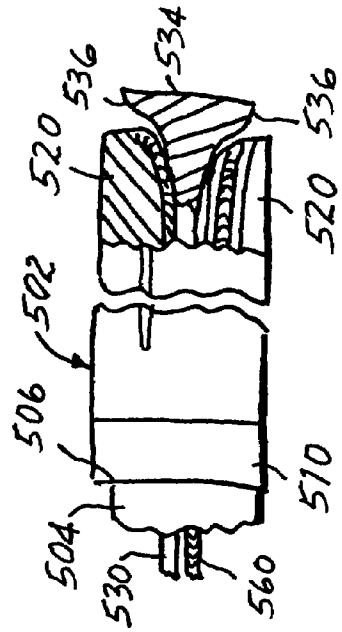

FIG. 38

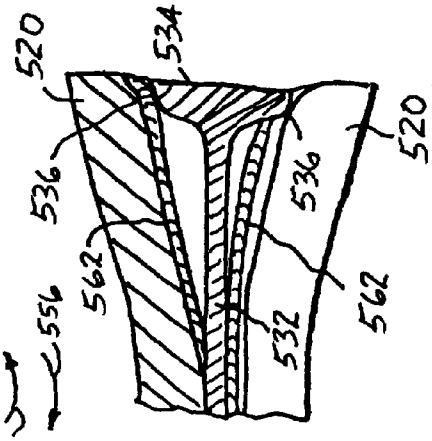

FIG. 39

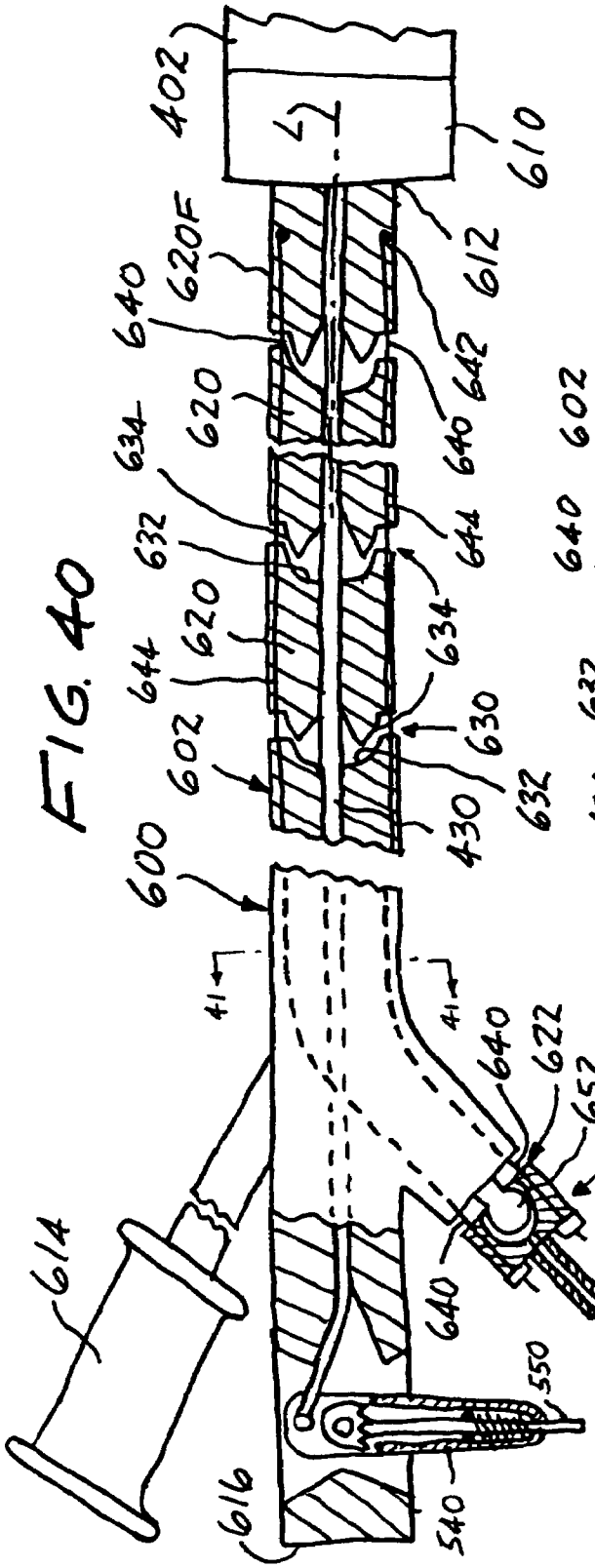

FIG. 40

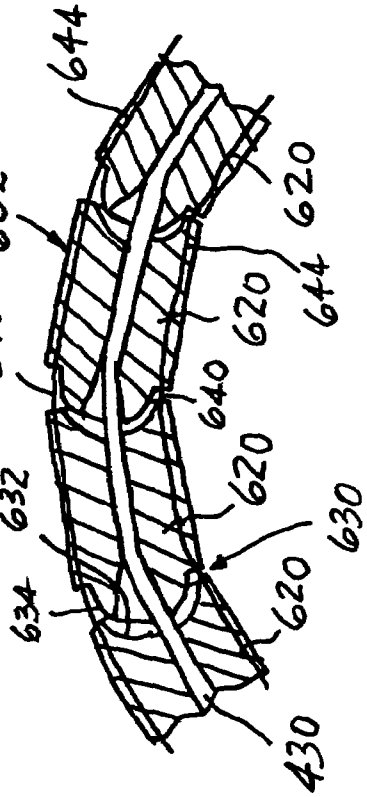

FIG. 42

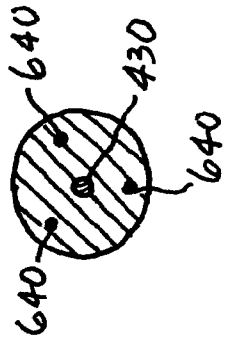

FIG. 41

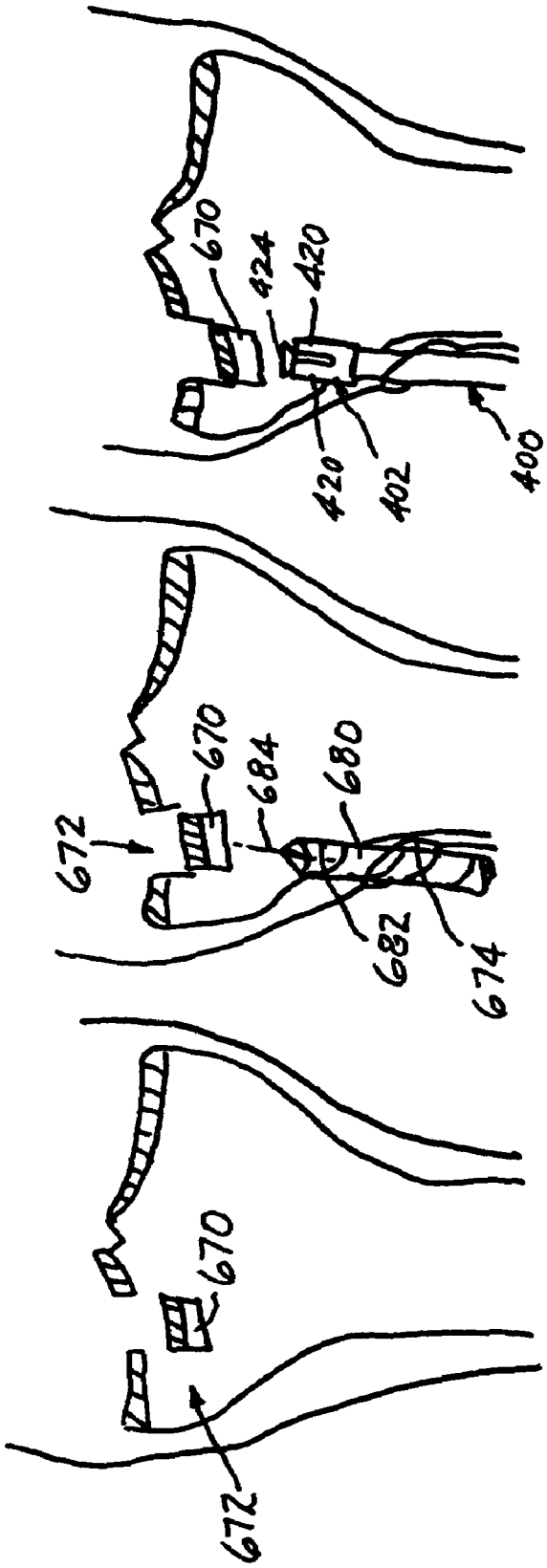

FIG. 45

FIG. 44

FIG. 43

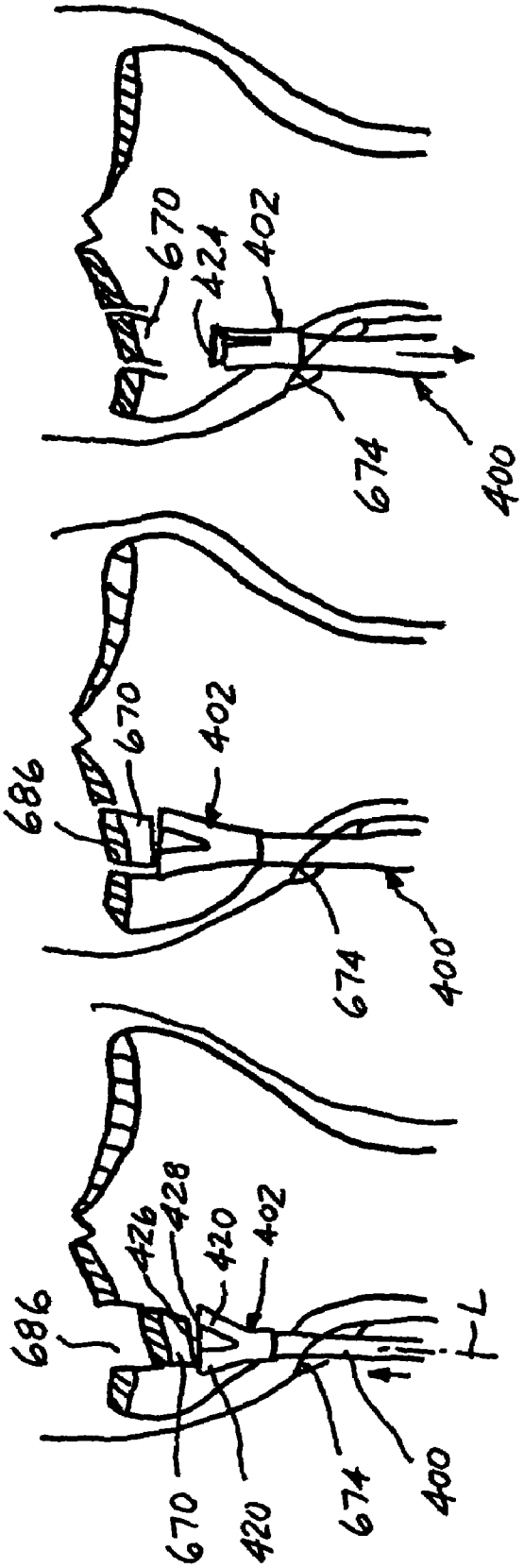

FIG. 46

FIG. 47

FIG. 48

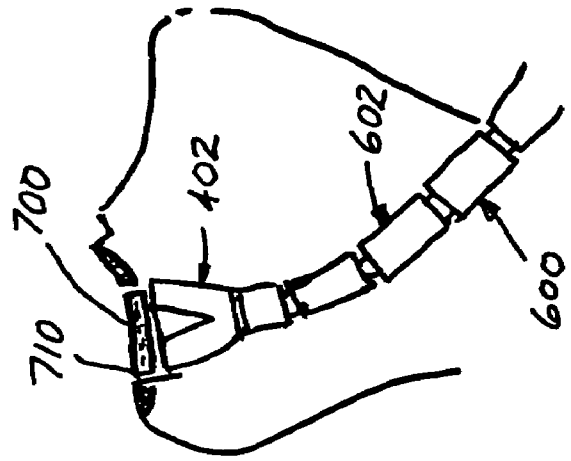

FIG. 51

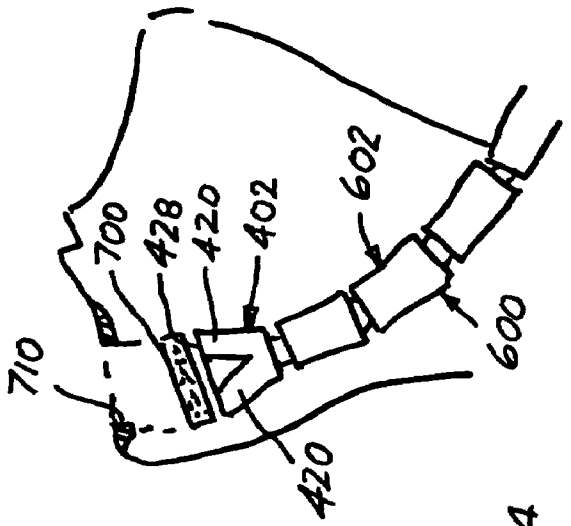

FIG. 50

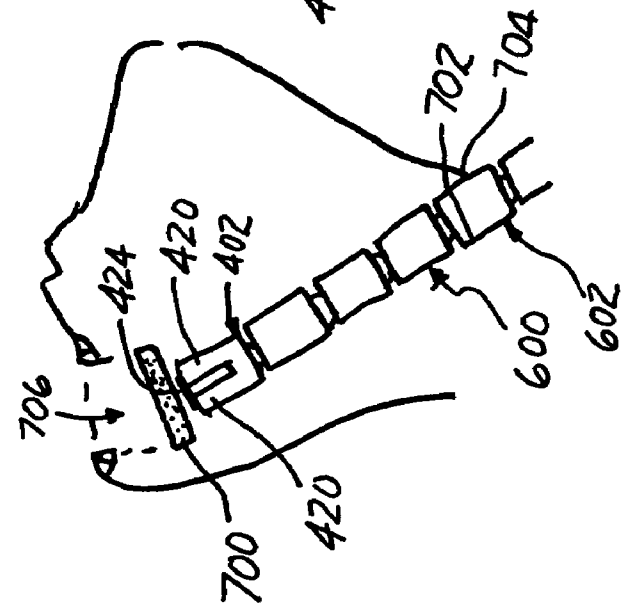

FIG. 49

APPARATUS AND METHOD FOR THE REDUCTION OF BONE FRACTURES

BACKGROUND OF THE INVENTION

1. Field of the Invention

The present invention relates generally to the reduction of bone fractures and other bone conditions and pertains, more specifically, to instruments and techniques which allow such reduction to be accomplished with minimally invasive procedures. In particular, the instruments and techniques are used to manage bone fractures and bone conditions located near joints of the body (peri-articular fractures) and fractures that involve joint surfaces (intra-articular fractures).

2. Description of Related Art

Most joint related fractures require precise reduction and stabilization so as to avoid healing with a rough or misaligned joint surface which quickly can cause disabling post-traumatic arthritis. The majority of these intra-articular fractures currently are reduced under direct inspection of the bone fracture fragments, utilizing relatively large incisions to gain open access to the injured areas. The incisions extend into the joint and are carried through muscles, tendons and capsules in order to reach the fracture. Once exposed, the bone fracture fragments are physically disengaged from their displaced positions and are reduced as anatomically as possible, all under direct vision. These fragments then are fixed in the reduced position, as by wires, screws, plates and external fixators used either alone or in various combinations. Despite careful operative procedures, such open reduction carries substantial risks to the patient, ranging from soft tissue necrosis to deep wound and joint infections. Even where incisions heal well, scarring of the transected tissues is inevitable and can result in joint stiffness and potentially serious functional restrictions affecting daily living, as well as work and recreational pursuits.

More recent attempts at avoiding the drawbacks and risks of open reduction have involved techniques for the percutaneous reduction and affixation of bone fracture fragments, utilizing small cylindrical and flat-ended bone punches and pins inserted through relatively small soft tissue incisions and fracture gaps or even drill holes. Under arthroscopic or radiographic visualization, these instruments are used to manipulate bone fracture fragments into more anatomical positions where the fragments are stabilized with screws, plates or a combination of both screws and plates. Although these techniques can avoid some of the complications afflicting open reduction, to date such techniques have been successful only in the reduction of simple fractures, such as splits and some depressions.

The utilization of bone punches for the reduction and stabilization of bone fractures presents crucial shortcomings. Thus, bone punches permit only unidirectional motion and concomitant unidirectional movement of bone fracture fragments. Further, bone punches have relatively small contact, or working surfaces with which to engage bone fragments, usually no more than one square centimeter. As a result, when attempting to reduce bone fracture fragments, and especially comminuted bone fracture fragments, rather than pushing the bone fracture fragments into a desired position, bone punches tend to slide through gaps between the bone fracture fragments and penetrate into the joint itself, rendering the punches ineffectual and even potentially harmful to the joint. Larger diameter punches would require corresponding larger diameter bone openings for enabling introduction of the punches, presenting a danger of developing stress fractures at the level of the entry holes, such stress fractures being an unacceptable condition.

BRIEF SUMMARY OF THE INVENTION

The present invention provides instruments and method for enabling effective reduction of bone fractures utilizing minimally invasive techniques, thereby avoiding drawbacks of open reduction and current percutaneous procedures. As such, the present invention attains several objects and advantages, some of which are summarized as follows: Enables minimally invasive procedures for the reduction of bone fractures by virtue of requiring only small openings in soft tissue and bone for the introduction, manipulation and removal of instruments constructed for carrying out percutaneous techniques for bone fracture reduction; provides instruments having broad working configurations relative to narrow insertion configurations to accomplish effective support and movement of bone fracture fragments into reduced positions at a bone fracture site accessed through a minimally invasive access passage; allows for simplified manipulation of a working head from a remote location to rotate and translate bone fracture fragments in multiple directions for minimally invasive bone fracture reduction, and especially in the management of bone fractures and bone conditions located near joints of the body (peri-articular fractures) and fractures that involve joint surfaces (intra-articular fractures); allows the reduction of relatively large fractured joint surfaces, percutaneously, using only arthroscopic or radiographic visualization methods in minimally invasive procedures; avoids risks and complications which otherwise could arise out of open reduction procedures, such as soft tissue necrosis and bone infections; reduces operating times and blood loss; enables a reduction in the length of a hospital stay and, in some instances, avoids hospitalization entirely; reduces recovery time and patient discomfort; avoids excessive joint stiffness and potentially serious functional restrictions affecting daily living, as well as work and recreational pursuits.

The above objects and advantages, as well as further objects and advantages, are attained by the present invention which may be described briefly as apparatus for the reduction of a bone fragment of a bone fracture at a bone fracture site through a minimally invasive access passage to the bone fracture site, the access passage following an access direction and having a minimally invasive cross-sectional area, the apparatus comprising: a working head constructed for actuation between an insertion configuration and a working configuration; the insertion configuration providing the working head with an insertion area transverse to the access direction and being dimensioned and configured for passing through the minimally invasive cross-sectional area to move along the access passage to the bone fracture site; the working configuration providing the working head with an essentially rigid working face extending over a working area transverse to the access direction, the working area of the extended working face being substantially greater than the insertion area for engaging and manipulating the bone fragment into a reduced position; an actuating arrangement including an actuator remote from the working head for actuating the working head between the insertion configuration and the working configuration from an actuating site remote from the bone fracture site; a coupling arrangement coupling the actuator with the working head for enabling remote actuation of the working head in response to operation of the actuator; and a manipulating arrangement for selective manipulation of the working head from the remote actuating site such that insertion of the

working head through the access passage to the bone fracture site is accomplished with the working head in the insertion configuration, and upon placement of the working head at the bone fracture site and actuation of the working head to the working configuration, reduction of the bone fragment is accomplished with the working head in the working configuration to engage the bone fragment with the working face and manipulate the bone fragment into the reduced position at the bone fracture site.

In addition, the present invention include apparatus for the reduction of a bone fragment of a bone fracture at a bone fracture site through a minimally invasive access passage to the bone fracture site, the access passage following an access direction and having a minimally invasive cross-sectional area, the apparatus comprising: a working head constructed for being moved between an insertion configuration and a working configuration; the insertion configuration providing the working head with an insertion area transverse to the access direction and being dimensioned and configured for passing through the minimally invasive cross-sectional area to move along the access passage to the bone fracture site; the working configuration providing the working head with an essentially rigid working face extending over a working area transverse to the access direction, the working area of the extended working face being substantially greater than the insertion area for engaging and maneuvering the bone fragment into a reduced position; and a manipulating arrangement including a manipulator for selective manipulation of the working head from a remote manipulating site such that insertion of the working head through the access passage to the bone fracture site is accomplished with the working head in the insertion configuration, and upon placement of the working head at the bone fracture site and movement of the working head in the working configuration, reduction of the bone fragment is accomplished with the working head in the working configuration to engage the bone fragment with the working face and maneuver the bone fragment into the reduced position at the bone fracture site.

Further, the present invention provides a method for the reduction of a bone fragment of a bone fracture at a bone fracture site through a minimally invasive access passage to the bone fracture site, the access passage following an access direction and having a minimally invasive cross-sectional area, the method comprising: introducing into the access passage a working head constructed for actuation between an insertion configuration and a working configuration; the insertion configuration providing the working head with an insertion area transverse to the access direction and being dimensioned and configured for passing through the minimally invasive cross-sectional area to move along the access passage to the bone fracture site; and the working configuration providing the working head with an essentially rigid working face extended over a working area transverse to the access direction, the working area of the extended working face being substantially greater than the insertion area for engaging and manipulating the bone fragment into a reduced position; with the working head in the insertion configuration, passing the working head through the minimally invasive cross-sectional area to move the working head along the access passage and place the working head at the bone fracture site; actuating an actuator remote from the working head to actuate the working head from the insertion configuration into the working configuration from an actuating site remote from the bone fracture site; and selectively manipulating the working head from the remote actuating site such that insertion of the working head through the access passage to the bone fracture site is accomplished with the working head in the insertion configuration and, upon placement of the working head at the bone fracture site and actuation of the working head to the working configuration, reduction of the bone fragment is accomplished with the working head in the working configuration to engage the bone fragment with the working face and manipulate the bone fragment into the reduced position at the bone fracture site.

BRIEF DESCRIPTION OF THE SEVERAL VIEWS OF THE DRAWING

The invention will be understood more fully, while still further objects and advantages will become apparent, in the following detailed description of preferred embodiments illustrated in the accompanying drawing, in which:

FIG. **1** is a somewhat diagrammatic fragmentary pictorial view of an instrument constructed in accordance with the present invention;

FIG. **2** is a fragmentary top plan view of the instrument;

FIG. **3** is a fragmentary side elevational view of the instrument;

FIG. **4** is and end view of the instrument, taken in the direction of the arrow in FIG. **2**;

FIG. **5** is a somewhat diagrammatic fragmentary pictorial view of another instrument constructed in accordance with the invention;

FIG. **6** is a fragmentary top plan view of the instrument;

FIG. **7** is a side elevational view of the instrument;

FIG. **8** is a cross-sectional view taken along line **8-8** of FIG. **7**;

FIG. **9** is a fragmentary side elevational view of the instrument, showing another operating configuration;

FIG. **10** is a somewhat diagrammatic fragmentary pictorial view of still another instrument constructed in a accordance with the invention;

FIG. **11** is a fragmentary top plan view of the instrument;

FIG. **12** is a side elevational view of the instrument;

FIG. **13** is a cross-sectional view taken along line **13-13** of FIG. **12**;

FIG. **14** is a fragmentary side elevational view of the instrument, showing another operating configuration;

FIG. **15** is a somewhat diagrammatic fragmentary pictorial view of another instrument constructed in accordance with the invention;

FIG. **16** is a fragmentary top plan view of the instrument;

FIG. **17** is a cross-sectional view taken along line **17-17** of FIG. **16**;

FIG. **18** is a side elevational view of the instrument;

FIG. **19** is a fragmentary side elevational view of the instrument, showing another operating configuration;

FIGS. **20** through **22** are diagrammatic illustrations of an intra-articular bone fracture;

FIGS. **23** through **25** are diagrammatic illustrations of a procedure for reduction of the bone fracture in accordance with the present invention;

FIGS. **26**A through **28**B are diagrammatic illustrations of another procedure for reduction of a bone fracture;

FIG. **29** is a longitudinal cross-sectional view of an alternate instrument constructed in accordance with the present invention;

FIG. **30** is a fragmentary end perspective view of the instrument;

FIG. **31** is a fragmentary end perspective view showing component parts in another operative configuration;

FIG. **32** is a fragmentary cross-sectional view taken along line **32-32** of FIG. **31**;

FIG. **33** is a fragmentary plan view showing alternate component parts of the instrument;

FIG. **34** is a fragmentary longitudinal cross-sectional view of a portion of FIG. **33** and showing the alternate component parts in another operating configuration;

FIG. **35** is a longitudinal cross-sectional view of another instrument constructed in accordance with the invention;

FIG. **36** is a transverse cross-sectional view taken along line **36-36** of FIG. **35**;

FIG. **37** is a transverse cross-sectional view taken along line **37-37** of FIG. **35**;

FIG. **38** is a fragmentary cross-sectional view of the instrument in one operating configuration;

FIG. **39** is a fragmentary view similar to FIG. **38**, with the instrument in another operating configuration;

FIG. **40** is a longitudinal cross-sectional view showing an alternate construction for the instrument;

FIG. **41** is a transverse cross-sectional view taken along line **41-41** of FIG. **40**;

FIG. **42** is a fragmentary longitudinal cross-sectional view showing the instrument in an another operating configuration;

FIGS. **43** through **48** are diagrammatic views illustrating a procedure for the reduction of a bone fracture, conducted in accordance with the present invention; and

FIGS. **49** through **51** are diagrammatic views illustrating another procedure for reduction of a bone fracture, conducted in accordance with the present invention.

DETAILED DESCRIPTION OF THE INVENTION

Referring now to the drawing, and especially to FIGS. **1** through **4**, an instrument constructed in accordance with the present invention is illustrated at **100** and is seen to have a working head **102** and a stem **104**, the stem **104** extending along a longitudinal axis L between a first end **106** connected to the working head **102** and a second end **108** remote from the working head **102**. A handle **110** at the remote second end **108** enables manipulation of the instrument **100**, while a connection **112** connects the working head **102** to the first end **106** of the stem **104** for selective articulation of the working head **102** relative to the stem **104**, all as will be described in greater detail below.

Working head **102** has an insertion area **120** transverse to the direction which extends along the longitudinal axis L, and an essentially rigid working face **122** extending over a working area **124**, the working area **124** being substantially greater than the insertion area **120**, providing the working head **102** with a generally blade-like overall configuration having a sharp cutting edge **126** extending along a forward edge **128** of the working head **102** in a lateral direction between laterally opposite side edges **129** of the working head **102** such that the working head **102** is provided with a broad, essentially flat working area **124** relative to the narrow, relatively small transverse dimensions of the stem **104** and the very limited altitudinal thickness H of the blade-like working head **102**. In a preferred construction, the stem **104** has a generally cylindrical cross-sectional configuration, the working head **102** includes a further cutting edge **130** extending laterally along a rearward edge **132** of the working head **102**, all for purposes set forth hereinafter. Working head **102** is constructed of a rigid material, such as a metal or a renitent or reinforced synthetic polymeric material, or various combinations of such materials, for establishing rigidity at working face **122** to enable engagement with and manipulation of bone fracture fragments, as described below. In addition, substantially rigid radiolucent materials are available for constructing the working head **102**, and the choice of such a material will facilitate a visualization of reduced bone fragments during the course of a procedure, as described below.

Turning now to FIGS. **5** through **9**, in one instrument **140** constructed in accordance with the present invention, the connection **112** provides for articulation between the working head **102** and the stem **104** and is a pivotal connection in the form of a hinged connection **142** comprising an upper hinge pin **144** and a lower hinge pin **146**. Hinge pin **144** is seated within ears **150** extending longitudinally rearwardly along working head **102** and ears **150** are spaced apart laterally such that hinge pin **144** spans the distance between the ears **150** and passes through a headed end **152** of a stem **154** which extends longitudinally along longitudinal axis L. Hinge pin **146** is seated within working head **102** forward and slightly below hinge pin **144**, hinge pin **146** spanning a slot **156** within working head **102** to pass through a link **160** having a forward end **162** extending into slot **156**. Link **160** is placed within a longitudinal channel **164** of the stem **154**, in sliding engagement with the stem **154**, and includes a rearward end **166** adjacent remote end **168** of the stem **154**.

An actuating arrangement includes an actuator in the form of a lever **170** mounted upon the stem **154** for selective pivotal movement about a pivot pin **172** adjacent the remote end **168** of the stem **154**. Link **160** is pinned at **174** to lever **170** such that upon selective pivotal movement of lever **170** in forward and backward directions, as illustrated by arrow **176** in FIG. **7**, the coupling arrangement provided by the hinged connection **142** and the link **160** moves the working head **102** between a first or insertion position, wherein the working head **102** is aligned with longitudinal axis L, as shown in FIGS. **5** through **7**, and a second or working position, wherein the working head **102** extends transverse to longitudinal axis L, as illustrated in FIG. **9**. A locking mechanism includes a lock bar **180** biased by a spring **182** into engagement with one of several notches **184** fixed relative to stem **154** so that lever **170**, and consequently working head **102**, is secured selectively in any one of several working positions between, and even beyond, the illustrated first and second positions of working head **102**. A manipulating arrangement includes a manipulating handle **186** attached to the remote end **168** of the stem **154**, as by selectively engagable and disengagable chuck jaws **188**, for purposes described in greater detail below.

Another instrument constructed in accordance with the present invention is shown at **190** in FIGS. **10** through **14**. Here, the connection **112** provides for articulation between the working head **102** and a stem and is a pivotal connection in the form of a hinged connection **192** comprising a generally T-shaped hinge member **194** having a post **196** and an integral sleeve **198**. Post **196** is received within a complementary recess **200** in working head **102** so that the working head **102** is journaled for rotation about longitudinal axis L. Sleeve **198** includes a bore **202** through which a hinge pin **204** is passed, hinge pin **204** being anchored within opposed ears **206** at a forward end **208** of a stem **210**, and complementary to bore **202** such that working head **102** is journaled for rotation about an axis T which extends transverse to axis L in lateral directions.

Altitudinally upper control cables **220** are attached to working head **102** at respective upper attachment points **222** and extend rearwardly to enter a conduit **224** within stem **210**, through respective upper entrances **226**. Similarly, altitudinally lower control cables **230** are attached to working head **102** at respective lower attachment points **232** and extend rearwardly to enter conduit **224** through respective lower entrances **236**.

An actuating arrangement includes an actuator located adjacent remote end **240** of stem **210**, the actuator being in the form of a control lever **242** mounted upon the stem **210** by means of a ball joint **244** and coupled to the upper and lower control cables **220** and **230**, respectively, such that manipulation of the control lever **242** will move the control cables **220** and **230** selectively in forward and backward directions relative to the stem **210**, in a differential manner commonly known as a "joy stick" arrangement. Thus, pulling the lower control cables **230** in a rearward direction while allowing the upper control cables **220** to move in a forward direction will pivot the working head **102** about hinge pin **204** to move the working head **102** from a position where the working head **102** is aligned with longitudinal axis L, as seen in FIGS. **10** through **12**, through transverse positions located altitudinally between, and even beyond, the aligned position and an altitudinally downward transverse position, as illustrated in full lines in FIG. **14**. Altitudinally upward transverse positions are accomplished merely by rotating the stem **210** about the longitudinal axis L. Alternately, upward transverse positions are attained by pulling the upper control cables **220** in a rearward direction while allowing the lower control cables **230** to move in a forward direction so as to pivot the working head **102** about hinge pin **204** to move the working head **102** from a position where the working head **102** is aligned with longitudinal axis L, as seen in FIGS. **10** through **12**, through transverse positions located altitudinally between the aligned position and an altitudinally upward transverse position, as illustrated in phantom in FIG. **14**.

Rotation of the working head **102** upon post **196**, while the working head is in an altitudinally downward transverse orientation, is attained by pulling one of the lower control cables **230** rearwardly while allowing the other of the lower control cables **230** to move forward. Likewise, rotation of the working head **102** upon post **196**, while the working head is in an altitudinally upward transverse orientation, is attained by pulling one of the upper control cables **220** rearwardly while allowing the other of the upper control cables **220** to move forward. A lock bar **246** selectively locks the ball joint **244** against inadvertent movement to hold the selected orientation of the working head **102** relative to the stem **210**. A handle **248** is placed at the remote end **240** of stem **210** for manipulating instrument **190**, as will be described below.

Turning now to FIGS. **15** through **19**, in another instrument **250** constructed in accordance with the present invention, the connection **112** which provides for articulation between the working head **102** a stem is a pivotal connection in the form of a ball joint connection **252** comprising a generally spherical member **254** integral with the working head **102** and captured within a congruent socket **256** at the forward end **258** of a stem **260** extending along a longitudinal axis L, by a collar **262** threaded onto the forward end **256**. The collar **262** itself includes an inner surface **264** having a generally part-spherical configuration.

Altitudinally upper control cables **270** are attached to working head **102** at respective upper attachment points **272** and extend rearwardly to enter respective conduits **274** within stem **260**, through respective upper entrances **276**. Similarly, altitudinally lower control cables **280** are attached to working head **102** at respective lower attachment points **282** and extend rearwardly to enter respective counterpart conduits **284** through respective lower entrances **286**.

An actuating arrangement includes an actuator located adjacent remote end **290** of stem **260**, the actuator being in the form of a control lever **292** mounted upon the stem **260** by means of a ball joint **294** and coupled to the upper and lower control cables **270** and **280**, respectively, such that manipulation of the control lever **292** will move the control cables **270** and **280** selectively in forward and rearward directions relative to the stem **260**, in a differential manner commonly known as a "joy stick" arrangement. Thus, pulling the lower control cables **280** in a rearward direction while allowing the upper control cables **270** to move in a forward direction will pivot the working head **102** about a transverse axis T to move the working head **102** from a position where the working head **102** is aligned with longitudinal axis L, as seen in FIGS. **15**, **16** and **18**, through transverse positions located altitudinally between, and even beyond, the aligned position and an altitudinally downward transverse position, as illustrated in FIG. **19**. Altitudinally upward transverse positions are accomplished by pulling the upper control cables **270** in a rearward direction while allowing the lower control cables **280** to move in a forward direction so as to pivot the working head **102** about transverse axis T to move the working head **102** from a position where the working head **102** is aligned with longitudinal axis L, as seen in FIGS. **15** and **18**, through transverse positions located altitudinally between, and even beyond, the aligned position and an altitudinally upward transverse position, illustrated in phantom in FIG. **19**.

Rotation of the working head **102** about an altitudinal axis A, while the working head is in an altitudinally downward transverse orientation, is attained by pulling one of the lower control cables **280** rearwardly while allowing the other of the lower control cables **280** to move forward. Likewise, rotation of the working head **102** about altitudinal axis A, while the working head is in an altitudinally upward transverse orientation, is attained by pulling one of the upper control cables **270** rearwardly while allowing the other of the upper control cables **270** to move forward. A lock bar **296** selectively locks the ball joint **294** against inadvertent movement to hold the selected orientation of the working head **102** relative to the stem **260**.

In addition, rotation of the working head **102** about the altitudinal axis A while the working head **102** is aligned with longitudinal axis L, in the position shown in FIGS. **15** and **16**, is accomplished by pulling rearwardly the one upper control cable **270**A and the one lower control cable **280**A located adjacent one side of longitudinal axis L while allowing the other upper control cable **270**B and the other lower control cable **280**B located adjacent the other side of longitudinal axis L to move forward, thereby rotating the working head to skewed positions, one of which is illustrated in phantom at **102**A in FIG. **16**. Likewise, rotation of the working head to skewed positions such as that illustrated in phantom at **102**B in FIG. **16** is accomplished by pulling control cables **270**B and **280**B rearwardly while allowing control cables **270**A and **280**A to move forward. Further, combinations of control cable differential movements through manipulation of control lever **292** enable selective movement of working head **102** through infinite orientations about axes L, T and A. A handle **298** enables manipulation of instrument **250**, as described below.

Referring now to FIGS. **20**, **21** and **22**, an example of a joint is shown in the form of a knee joint illustrated diagrammatically at **300** and seen to include femoral condyles **310** which engage corresponding tibial plateaus **312** during articulation of the knee joint **300**. The knee joint **300** is surrounded by soft tissue, in particular, skin **314** and subcutaneous tissue **320**. Layers **322** of articular cartilage facilitate normal articulation of the knee joint **300**.

Typically, joint fractures occur when extreme external force applied to one of the bones of a joint causes an impact which breaks a corresponding bone of the joint. In the example shown in FIGS. **21** and **22**, a femoral condyle **310**

has impacted upon a corresponding tibial plateau **312**, causing an intra-articular fracture at **326** in which a bone fracture fragment **330** has been broken away and displaced from its original anatomical position in the joint **300**. The bone fracture site **333** is illustrated in both an anterior-posterior projection (FIG. **21**) and a lateral projection (FIG. **22**) and shows the bone fracture fragment **330** displaced and rotated from its original position by several centimeters, and wedged firmly within underlying bone. The bone fracture fragment **330** itself includes a portion of a cartilage layer **322** as well as some attached subchondral bone **334**. Repair of the bone fracture **326** requires that the bone fracture fragment **330** be returned to an appropriate anatomical position, usually within two to three millimeters of its original anatomical position, in order to avoid severe, disabling arthritis which otherwise could ensue. It is therefore the objective of a reduction procedure to return the bone fracture fragment **330** as closely as possible to its optimal anatomical position and thereby avoid the development of post traumatic arthritis. Current open reduction procedures are prone to substantial morbidity. Further, current percutaneous methods are suitable only for the most simple fractures and are severely limited with respect to the size and maneuverability of the working surfaces of currently available instruments. The present invention enables minimally invasive procedures which avoid the drawbacks of open reduction and the limitations of current percutaneous procedures.

In accordance with a minimally invasive procedure of the present invention, the exact location and orientation of the bone fracture fragment **330** and the optimal approach for reduction of the bone fracture fragment **330** at bone fracture site **333** is determined by radiographs in two perpendicular planes, or by alternate imaging methods, which provide images similar to those represented in FIGS. **21** and **22**. Alternately, arthroscopic procedures may be employed. Then, as seen in FIG. **23**, a small incision **340** is made through skin **314** and subcutaneous tissue **320**, opposite to the bone fracture fragment **330** to create an access passage **342** having a minimally invasive cross-sectional area and aligned with an access direction **344** leading to the bone fracture site **333**. Instrument **140** is inserted into the incision **340**, with the working head **102** in an insertion configuration wherein the working head **102** is aligned with longitudinal axis L and the insertion area **120** is oriented transverse to the access direction **344**, the insertion area **120** being dimensioned and configured for passing through the minimally invasive cross-sectional area of the access passage **342** to move along the access passage **342** to the bone fracture site **333**.

Instrument **140** is advanced along the access passage **342**, with the assistance of sharp cutting edge **126** along forward edge **128** of the working head **102**, until the forward edge **128** is placed beneath the far subchondral end **350** of the bone fracture fragment **330**, as shown in FIG. **23**. Then, the working head **102** is articulated relative to the stem **154** into a working configuration and the stem **154** is moved laterally somewhat to juxtapose the working head **102** with the bone fracture fragment **330** and to orient the working head **102** generally parallel with the bone fracture fragment **330**, as shown in FIG. **24**, wherein the rigid working face **122** of the working head **102** confronts the bone fracture fragment **330** with the broad flat working area **124**, relative to the limited altitudinal thickness H of the working head **102** and the narrow, relatively small transverse dimensions of the stem **154**. Through a combination of articulation of the working head **102** and manipulation of the stem **154**, the bone fracture fragment **330** is engaged by the working head **102**, along the broad flat working area **124** of the rigid working face **122**, and is moved into the original anatomical position, as illustrated in FIG. **25**, to complete the reduction of the bone fracture fragment **330** at the bone fracture site **333**. Instrument **140** then is withdrawn from the bone fracture site **333**, with the assistance of further cutting edge **130**, if present.

Where a bone fracture fragment is more severely displaced, either instrument **190** or instrument **250** may be utilized in connection with the present invention. Thus, as shown in FIGS. **26**A through **28**B, instrument **250** is employed in accordance with the present invention to reduce a bone fracture fragment **350** which has been more severely displaced, in both anterior-posterior and lateral planes, at a bone fracture site **353**. As described above in connection with the reduction procedure utilizing instrument **140**, instrument **250** is inserted through a small incision **360** made through skin and subcutaneous tissue, opposite to the bone fracture fragment **350** to create an access passage **362** having a minimally invasive cross-sectional area and aligned with an access direction **364** leading to the bone fracture site **353**. Instrument **250** is inserted into the incision **360**, with the working head **102** in an insertion configuration wherein the working head **102** is aligned with longitudinal axis L and the insertion area **120** is oriented transverse to the access direction **364**, the insertion area **120** being dimensioned and configured for passing through the minimally invasive cross-sectional area of the access passage **362** to move along the access passage **362** to the bone fracture site **353**.

Instrument **250** is advanced along the access passage **362**, with the assistance of sharp cutting edge **124** along forward end **126** of the working head **102**, until the edge **124** is placed beneath the far subchondral end **370** of the bone fracture fragment **350**, as shown in FIG. **26**A, wherein bone fracture site **353** is illustrated in an anterior-posterior projection, and in **26**B, wherein bone fracture site **353** is illustrated in a lateral projection. Then, the working head **102** is articulated relative to the stem **260**, through rotation about both axes T and A, as well as axis L, into a working configuration and the stem **260** is advanced and moved laterally somewhat to place the working head **102** oriented generally parallel with the bone fracture fragment **350**, as shown in FIGS. **27**A and **27**B, wherein the rigid working face **122** of the working head **102** confronts the bone fracture fragment **350** with the broad flat working area **124**, relative to the narrow, relatively small transverse dimensions of the stem **260**. Through a combination of articulation of the working head **102** and manipulation of the stem **260**, the bone fracture fragment **350** is engaged by the working head **102**, along the broad flat working area **124** of the rigid working face **122**, and is moved into the appropriate anatomical position, as illustrated in FIGS. **28**A and **28**B, to complete the reduction of the bone fracture fragment **350** at the bone fracture site **353**. Instrument **250** then is withdrawn from the bone fracture site **353**, with the assistance of further cutting edge **130**, if present.

Referring now to FIGS. **29** through **32**, another instrument constructed in accordance with the present invention is illustrated at **400** and is seen to have a working head **402** and a stem **404**, the stem **404** extending along a longitudinal axis L between a first end **406** connected to the working head **402** and a second end **408** remote from the working head **402**. A connector **410** connects the working head **402** to the stem **404** at the first end **406** of the stem **404**. A handle **412** adjacent the remote second end **408** enables manipulation of the instrument **400**, as will be described in detail below.

Working head **402** is selectively actuated between an insertion configuration, shown in FIGS. **29** and **30**, and a working configuration, illustrated in FIGS. **31** and **32**. To that end, working head **402** is comprised of sections **420** extending

axially essentially parallel to axis L from respective terminal ends **422** toward the second end **408** of the stem **404**, the terminal ends **422** each including a sector **423**. In the insertion configuration of the working head **402**, the sections **420** are contracted radially toward one another such that the sectors **423** present a relatively small terminal area **424** transverse to longitudinal axis L, at the terminal end **425** of the working head **402**, as illustrated in FIGS. **29** and **30**, in comparison to a larger working area **426** made available when the sectors **423** are extended radially to establish an essentially rigid working face **428** across the terminal end **425** of the working head **402** in the working configuration as depicted in FIGS. **31** and **32**.

Actuation of the working head **402** between the insertion configuration and the working configuration is accomplished by the selective operation of an actuating arrangement which includes a rod **430** extending along axis L from a forward end **432**, through a central bore **434** in stem **404**, to a rearward end **435**. Rod **430** is slidable axially within bore **434** and is flared radially outwardly at the forward end **432** to establish camming surfaces **436** along the rod **430** adjacent forward end **432** and confronting sections **420** of the working head **402**, which sections **420** are arranged circumferentially about the rod **430**. In the insertion configuration of working head **402**, the camming surfaces **436** adjacent forward end **432** of rod **420** are located relative to the sections **420** of the working head **402** to enable the sections **420** to remain contracted, as shown in FIGS. **29** and **30**. The rearward end **435** of the rod **430** extends axially beyond the second end **408** of stem **404** and includes a threaded portion **440** engaged with a complementary threaded knob **442** which, together with rod **420**, comprise an actuator for moving the working head **402** between the insertion configuration and the working configuration. Thus, upon advancement of knob **442** along threaded portion **440**, against second end **408** of stem **404**, rod **420** is drawn rearwardly to engage camming surfaces **436** with the surrounding sections **420** and the sections **420** are moved radially outwardly to establish the working configuration of working head **402**, as depicted in FIGS. **31** and **32**. The sections **420** are constructed of a resiliently deflectable material, such as a resiliently flexible steel or a somewhat renitent or reinforced synthetic polymeric material, enabling axial displacement of rod **430** to result in movement the sections **420** between the radially contracted and radially expanded positions of the sections **420** corresponding respectively to the insertion configuration and the working configuration of the working head **402**.

Turning now to FIGS. **33** and **34**, an alternate working head **440** includes sections **442** arranged circumferentially about a rod **444** having camming surfaces **446**, as described above. However, working head **440** further includes a biasing arrangement in the form of a resiliently expandable band **448** which biases the sections **442** toward the insertion configuration, as seen in FIG. **33**, and allows selective deflection of the sections **442** radially outwardly into the working position, as depicted in FIG. **34**, in response to axial movement of rod **444** in a rearward direction. Thus, rather than relying upon sections constructed of a resiliently deflectable material for biasing the sections radially inwardly, sections **442** may be constructed of a more rigid material and may be arranged for ready radial displacements, biased radially inwardly by band **448**.

In the embodiment illustrated in FIGS. **35** through **39**, an alternate instrument constructed in accordance with the invention is illustrated at **500** and is seen to have a working head **502** and a stem **504**, the stem **504** extending along a longitudinal axis L between a first end **506** connected to the working head **502** and a second end **508** remote from the working head **502**. A connector **510** connects the working head **502** to the stem **504** at the first end **506** of the stem **504**. A handle **512** adjacent the remote second end **508** enables manipulation of the instrument **500**, in a manner described in detail below.

Working head **502** is actuated between an insertion configuration and a working configuration by moving sections **520** between radially contracted positions, as illustrated in FIG. **38**, and radially expanded positions, as seen in FIG. **39**. An actuating arrangement includes a rod **530** extending longitudinally along a central bore **532** in the stem **504** and flared adjacent a forward end **534** to provide camming surfaces **536** confronting the sections **520**. Rod **530** is coupled at **538** to an actuator in the form of a lever **540** mounted for pivotal movement about a pin **542** adjacent the remote second end **508** of the stem **504**. Upon pivoting lever **540** in the direction of arrow **544** in FIG. **35**, rod **530** is drawn rearwardly, engaging camming surfaces **536** with sections **520** and moving the sections **520** radially outwardly. A locking mechanism includes a lock bar **550** biased by a spring **552** into engagement with one of several notches **554** fixed relative to stem **504** so that lever **540** is secured in place and working head **502** is fixed in the working configuration.

Upon release of lock bar **550** and pivoting of lever **540** in the direction of arrow **556**, a cable **560**, coupled to lever **540** for movement with the lever **540**, is drawn rearwardly, along central bore **532**, while rod **530** simultaneously is moved forward. Cable **560** is divided into branches **562** spaced apart circumferentially and diverging radially adjacent working head **502** and each branch **562** is attached to a corresponding section **520** so that as the camming surfaces **536** are moved forward with forward movement of rod **530**, the branches **562** of cable **560** are drawn rearwardly, with the result that sections **520** are contracted radially relative to one another and working head **502** is returned to the insertion configuration, as illustrated in FIG. **38**. In this manner, sections **520** are moved through positive displacements which do not require that the sections **520** be constructed of a resilient material or be biased by a resiliently biasing mechanism. Again, lock bar **550** is engaged with a notch **554** to secure lever **540** in place and fix working head **502** in the insertion configuration.

An alternate stem construction, available for use in connection with any of the aforesaid instruments, is illustrated in FIGS. **40** through **42** wherein an instrument **600** includes a stem **602** extending between a working head connected to the stem **602** by a connector **610** adjacent a first end **612** of the stem **602**, and a handle **614** adjacent a second end **616** of the stem **602**. Although the working head may be in the form of any one of the working heads **102**, **402**, and **502** described above, connected at connector **610**, the alternate stem construction is illustrated in use with working head **402** described above in connection with the instrument **400** illustrated in FIGS. **29** through **42**, and component parts of instrument **400** are repeated in the instrument depicted in FIGS. **40** through **42**.

Stem **602** is an articulating stem and comprises a plurality of segments **620** placed serially along a longitudinal axis L, and a manipulating arrangement includes a manipulator **622** at a remote actuating site **624** for selectively moving the segments **620** relative to one another in directions transverse to axis L to articulate the stem **602** and guide the working head **402** along a selected path of alternate paths extending from the remote actuation site **624** to a bone fracture site. Each segment **620** engages a next-consecutive segment **620** at a joint **630** between abutting segments **620**. Each joint **630** includes a concave semi-spherical socket **632** in one segment

620 engaged by a complementary convex semi-spherical protrusion 634 on a consecutive segment 620. The jointed stem 602 thus is selectively articulated between the straight configuration illustrated in FIG. 40 and curved configurations, one of which is shown in FIG. 42.

Articulation of stem 602 is attained by lateral movements of the segments 620 relative to one another, effected by cables 640 anchored to a forward-most segment 620F at anchoring points 642 and extending through corresponding passages 644 from the anchoring points 642 to the manipulator 622. The cables 640, and corresponding passages 644, are arranged circumferentially about central longitudinal axis L and are spaced laterally from axis L such that upon manipulation of the cables 640, segments 620 respond with corresponding lateral movements to be articulated to a selected configuration for following a selected path which can be either linear or non-linear, as will be described below. Manipulator 622 is shown in the form of a joy-stick arrangement in which a control lever 650 is mounted upon the stem 602 by means of a ball joint 652 and is coupled to the cables 654 such that manipulation of the control lever 650 will move the cables through differential longitudinal displacements to effect articulation of the stem 602 into the various stem configurations. A locking mechanism includes a lock bar 660 for securing the manipulator 622 against inadvertent actuation which might otherwise move the segments 620 away from a selected stem configuration.

Turning now to FIGS. 43 through 48, the reduction of an intra-articular fracture in accordance with the present invention is illustrated somewhat diagrammatically in connection with a tibial plateau fracture, utilizing instrument 400, described above in connection with FIGS. 29 through 32. Subsequent to the exact location and orientation of bone fracture fragment 670 and an appropriate approach for reduction of the bone fracture fragment 670 at bone fracture site 672, as determined by radiographs or by alternate imaging methods, which provide images similar to those represented in FIGS. 43 through 45, a small incision 674 is made through skin and subcutaneous tissue, distal and aligned with bone fracture fragment 670. A drill bit 680 having a diameter slightly larger than working head 402 of instrument 400, in the insertion configuration of the working head 402, is introduced through incision 674 and is advanced toward bone fracture fragment 670 to establish an access passage 682 having a minimally invasive cross-sectional area and aligned with an access direction 684 leading to the bone fracture site 672.

Subsequent to retraction of drill bit 680, instrument 400 is inserted into the incision 674, with the working head 402 in an insertion configuration wherein the sections 420 of the working head 402 are contracted radially toward one another to present the relatively small terminal area 424 transverse to longitudinal axis L, the terminal area 424 being dimensioned and configured for passing through the minimally invasive cross-sectional area of the access passage 682 to move along the access passage 682 to the bone fracture site 672, as seen in FIG. 45.

Upon reaching a position just beneath the bone fracture fragment 670, as depicted in FIG. 46, the working head 402 is actuated into the working configuration, with sections 420 moved radially outwardly to establish the larger working area 426 made available across the working face 428 of the working head 402 in the working configuration. Instrument 400 then is advanced longitudinally, in a direction along axis L, to move the bone fracture fragment 670 into an appropriate anatomical position in bone fracture gap 686, as seen in FIG. 47. With the bone fracture fragment 670 thus reduced, the sections 420 of the working head 402 are contracted radially to return the working head 402 to the insertion configuration and the instrument 400 is retracted, as seen in FIG. 48, to be withdrawn through the incision 674 for completion of the procedure.

The reduction of a tilted bone fracture fragment 700 is accomplished, in accordance with the present invention, utilizing instrument 600 having articulated stem 602 (see FIGS. 40 through 42), as shown in FIGS. 49 through 51. In order to gain better access to tilted bone fracture fragment 700, an access passage 702 is established through bony surface 704 opposite bone fracture site 706, utilizing a drill (not shown). Instrument 600 is introduced into access passage 702 with working head 402 in the insertion configuration, that is, with sections 420 contracted radially to present the small terminal area 424, and with the segments 620 of the stem 602 aligned essentially along a straight line so that the stem 602 is in an essentially straight configuration, as seen in FIG. 49, capable of being guided along a direct linear path toward the bone fracture fragment 700. Upon being juxtaposed in close proximity with the bone fracture fragment 700, the working head 402 is actuated into the working configuration by deploying the sections 420 radially outwardly, as seen in FIG. 50, and the stem 602 is articulated into a curved configuration for being guided along a selected non-linear path so as to gain an optimum orientation of the working head 402 for engaging the bone fracture fragment 700 with the working face 428 of the working head 402.

Once the working face 428 is engaged with the bone fracture fragment 700, instrument 600 is advanced toward bone fracture gap 710 while stem 602 is articulated to gradually increase the curvature of the stem 602 so as to be guided along a selected non-linear path to facilitate maneuvering the bone fracture fragment 700 in attaining an appropriate anatomical fit of the bone fracture fragment within the bone fracture gap 710, as depicted in FIG. 51. Subsequently, working head 402 is returned to the insertion configuration, stem 602 is returned to an essentially straight configuration, and instrument 600 is withdrawn through access passage 702 for completion of the procedure.

It will be apparent that the present invention attains the several objects and advantages summarized above, namely: Enables minimally invasive procedures for the reduction of bone fractures by virtue of requiring only small openings in soft tissue and bone for the introduction, manipulation and removal of instruments constructed for carrying out percutaneous techniques for bone fracture reduction; provides instruments having broad working configurations relative to narrow insertion configurations to accomplish effective support and movement of bone fracture fragments into reduced positions at a bone fracture site accessed through a minimally invasive access passage; allows for simplified manipulation of a working head from a remote location to rotate and translate bone fracture fragments in multiple directions for minimally invasive bone fracture reduction, and especially in the management of bone fractures and bone conditions located near joints of the body (peri-articular fractures) and fractures that involve joint surfaces (intra-articular fractures); allows the reduction of relatively large fractured joint surfaces, percutaneously, using only arthroscopic or radiographic visualization methods in minimally invasive procedures; avoids risks and complications which otherwise could arise out of open reduction procedures, such as soft tissue necrosis and bone infections; reduces operating times and blood loss; enables a reduction in the length of a hospital stay and, in some instances, avoids hospitalization entirely; reduces recovery time and patient discomfort; avoids excessive joint

stiffness and potentially serious functional restrictions affecting daily living, as well as work and recreational pursuits.

It is to be understood that the above detailed description of preferred embodiments of the invention are provided by way of example only. Various details of design, construction and procedure may be modified without departing from the true spirit and scope of the invention, as set forth in the appended claims.

The embodiments of the invention in which an exclusive property or privilege is claimed are defined as follows:

1. Apparatus for the reduction of a bone fragment of a bone fracture at a bone fracture site through a minimally invasive access passage to the bone fracture site, the access passage following an access direction and having a minimally invasive cross-sectional area, the apparatus comprising:

a working head constructed for actuation between an insertion configuration and a working configuration;

the insertion configuration providing the working head with an insertion area transverse to the access direction and being dimensioned and configured for passing through the minimally invasive cross-sectional area to move along the access passage to the bone fracture site;

the working configuration providing the working head with an essentially rigid working face extending over a working area transverse to the access direction, the working area of the extended working face being substantially greater than the insertion area for engaging and manipulating the bone fragment into a reduced position;

an actuating arrangement including an actuator remote from the working head for actuating the working head between the insertion configuration and the working configuration from an actuating site remote from the bone fracture site;

a coupling arrangement coupling the actuator with the working head for enabling remote actuation of the working head in response to operation of the actuator; and

a manipulating arrangement for selective manipulation of the working head from the remote actuating site such that insertion of the working head through the access passage to the bone fracture site is accomplished with the working head in the insertion configuration, and upon placement of the working head at the bone fracture site and actuation of the working head to the working configuration, reduction of the bone fragment is accomplished with the working head in the working configuration to engage the bone fragment with the working face and manipulate the bone fragment into the reduced position at the bone fracture site;

the manipulating arrangement including a stem extending longitudinally along a longitudinal axis and having lateral transverse dimensions; and

the working head comprising a blade-like member having a leading edge, a trailing edge spaced longitudinally from the leading edge, an altitudinal thickness, and side edges spaced apart laterally from one another along a lateral dimension substantially greater than the laterally transverse dimensions of the stem such that the working face extends over the working area between the leading, trailing and side edges throughout a relatively large area in comparison to any area established by the laterally transverse dimensions of the stem and the thickness of the blade-like member.

2. The apparatus of claim **1** wherein the manipulating arrangement includes a stem extending along a longitudinal axis between the actuator and the working head, the stem comprising a plurality of segments placed serially along the longitudinal axis, and a manipulator for selectively moving the segments relative to one another transverse to the longitudinal axis to guide the stem along a selected path of selectable alternate paths, both linear and non-linear, between the actuating site and the bone fracture site.

3. The apparatus of claim **2** wherein the manipulator includes control cables extending along the segments between the actuator and the working head for moving the segments transversely relative to one another.

4. The apparatus of claim **1** wherein:

the actuating arrangement includes a pivotal connection between the blade-like member and the stem for selective pivotal movement of the blade-like member, in response to operation of the actuator, between an insertion position, wherein the working face extends longitudinally, essentially aligned with the longitudinal axis of the stem for passing the blade-like member along the access direction to the bone fracture site, and a working position, wherein the working area extends transverse to the longitudinal axis for engaging the working face with the bone fragment and reduction of the bone fragment of the bone fracture at the bone fracture site.

5. The apparatus of claim **4** wherein the pivotal connection includes a hinge for enabling selective movement of the blade-like member transverse to the longitudinal axis to place the working face in a working position selected from transverse positions of the blade-like member relative to the longitudinal axis.

6. The apparatus of claim **4** wherein the pivotal connection includes a ball-joint for enabling selective movement of the blade-like member in lateral and altitudinal directions relative to the longitudinal axis to place the working face in a working position selected from lateral and altitudinal positions of the blade-like member relative to the longitudinal axis.

7. The apparatus of claim **4** wherein the leading edge includes a cutting edge for facilitating advancement of the blade-like member along the insertion direction when the blade-like member is in the insertion position.

8. The apparatus of claim **4** wherein the stem includes a plurality of segments placed serially along the longitudinal axis, and the manipulation arrangement includes a manipulator for selectively moving the segments relative to one another transverse to the longitudinal axis to guide the stem along a selected path of selectable alternate paths, both linear and non-linear, between the actuating site and the bone fracture site.

9. The apparatus of claim **8** wherein the manipulator includes control cables extending along the segments between the actuator and the working head and coupled with the segments for moving the segments transversely relative to one another.

10. The apparatus of claim **9** wherein the segments include a forward-most segment coupled to the connector and the control cables are coupled to the forward-most segment and extending along the segments between the actuator and the forward-most segment for moving the segments transversely relative to one another.

11. The apparatus of claim **1** the working head comprises:

a rod extending along a longitudinal axis;

sections extending axially from respective terminal ends toward the remote actuating site, the sections being arranged circumferentially about the rod and terminating at transverse facial sectors establishing a terminal area at the respective terminal ends of the sections;

camming surfaces on the rod, the camming surfaces being engaged with the sections for selectively moving the sections radially, in response to axial movement of the

rod relative to the sections, between insertion positions, wherein the sections are contracted radially toward one another to present a relatively small terminal area transverse to the longitudinal axis, in comparison to the working area, the relatively small terminal area being dimensioned and configured for facilitating passage of the sections along the insertion direction to the bone fracture site, and working positions wherein the sections are moved radially outwardly away from one another to establish a relatively larger terminal area such that the facial sectors extend along the relatively larger working area for engaging the bone fragment and reducing the bone fragment of the bone fracture.

12. The apparatus of claim **11** wherein the working head includes a biasing arrangement for biasing the sections radially inwardly toward one another and into the insertion positions.

13. The apparatus of claim **11** wherein the manipulating arrangement includes a stem extending along a longitudinal axis between the actuator and the working head, the stem comprising a plurality of segments placed serially along the longitudinal axis, and a manipulator for selectively moving the segments relative to one another transverse to the longitudinal axis to guide the stem along a selected path of selectable alternate paths including both linear paths and non-linear paths, between the actuating site and the bone fracture site.

14. The apparatus of claim **13** wherein the manipulator includes control cables extending along the segments between the actuator and the working head for moving the segments transversely relative to one another.

15. Apparatus for the reduction of a bone fragment of a bone fracture at a bone fracture site through a minimally invasive access passage to the bone fracture site, the access passage following an access direction and having a minimally invasive cross-sectional area, the apparatus comprising:

a working head constructed for being moved between an insertion configuration and a working configuration;

the insertion configuration providing the working head with an insertion area transverse to the access direction and being dimensioned and configured for passing through the minimally invasive cross-sectional area to move along the access passage to the bone fracture site;

the working configuration providing the working head with an essentially rigid working face extending over a working area transverse to the access direction, the working area of the extended working face being substantially greater than the insertion area for engaging and maneuvering the bone fragment into a reduced position; and

a manipulating arrangement including a manipulator for selective manipulation of the working head from a remote manipulating site such that insertion of the working head through the access passage to the bone fracture site is accomplished with the working head in the insertion configuration, and upon placement of the working head at the bone fracture site and movement of the working head in the working configuration, reduction of the bone fragment is accomplished with the working head in the working configuration to engage the bone fragment with the working face and maneuver the bone fragment into the reduced position at the bone fracture site;

the manipulating arrangement including a stem extending longitudinally along a longitudinal axis and having lateral transverse dimensions; and

the working head comprising a blade-like member having a leading edge, a trailing edge spaced longitudinally from the leading edge, an altitudinal thickness, and side edges spaced apart laterally from one another along a lateral dimension substantially greater than the laterally transverse dimensions of the stem such that the working face extends over the working area between the leading, trailing and side edges throughout a relatively large area in comparison to any area established by the laterally transverse dimensions of the stem and the thickness of the blade-like member.

16. The apparatus of claim **15** wherein the manipulating arrangement includes a stem extending along a longitudinal axis between the manipulator and the working head, the stem comprising a plurality of segments placed serially along the longitudinal axis, and a further manipulator for selectively moving the segments relative to one another transverse to the longitudinal axis to guide the stem along a selected path of selectable alternate paths, both linear and non-linear, between the remote manipulating site and the bone fracture site.

17. The apparatus of claim **16** wherein the manipulator includes control cables extending along the segments between the manipulating site and the working head for moving the segments transversely relative to one another.

18. The apparatus of claim **15** wherein the leading edge includes a cutting edge for facilitating advancement of the blade-like member along the access direction when the blade-like member is in the insertion position.

19. A method for the reduction of a bone fragment of a bone fracture at a bone fracture site through a minimally invasive access passage to the bone fracture site, the access passage following an access direction and having a minimally invasive cross-sectional area, the method comprising:

introducing into the access passage a working head constructed for actuation between an insertion configuration and a working configuration;

the insertion configuration providing the working head with an insertion area transverse to the access direction and being dimensioned and configured for passing through the minimally invasive cross-sectional area to move along the access passage to the bone fracture site; and

the working configuration providing the working head with an essentially rigid working face extended over a working area transverse to the access direction, the working area of the extended working face being substantially greater than the insertion area for engaging and manipulating the bone fragment into a reduced position;

with the working head in the insertion configuration, passing the working head through the minimally invasive cross-sectional area to move the working head along the access passage and place the working head at the bone fracture site;

actuating an actuator remote from the working head to actuate the working head from the insertion configuration into the working configuration from an actuating site remote from the bone fracture site; and

selectively manipulating the working head from the remote actuating site with a manipulating arrangement including a stem extending longitudinally along a longitudinal axis and having lateral transverse dimensions, the working head comprising a blade-like member having a leading edge, a trailing edge spaced longitudinally from the leading edge, an altitudinal thickness, and side edges spaced apart laterally from one another along a lateral dimension substantially greater than the laterally transverse dimensions of the stem so that the working face extends over the working area between the leading, trail-

ing and side edges throughout a relatively large area in comparison to any area established by the laterally transverse dimensions of the stem and the thickness of the blade-like member such that insertion of the working head through the access passage to the bone fracture site is accomplished with the working head in the insertion configuration and, upon placement of the working head at the bone fracture site and actuation of the working head to the working configuration, reduction of the bone fragment is accomplished with the working head in the working configuration to engage the bone fragment with the working face and manipulate the bone fragment into the reduced position at the bone fracture site.

20. The method of claim **19** including guiding the working head along a selected path of alternate paths, both linear and non-linear, between the remote actuating site and the bone fracture site to maneuver the engaged bone fragment into the reduced position.

* * * * *