US010165350B2

(12) **United States Patent**
Dragicevic et al.

(10) **Patent No.: US 10,165,350 B2**
(45) **Date of Patent: Dec. 25, 2018**

(54) **EARPIECE WITH APP ENVIRONMENT**

(71) Applicant: **BRAGI GmbH**, München (DE)

(72) Inventors: **Darko Dragicevic**, München (DE); **Peter Vincent Boesen**, München (DE)

(73) Assignee: **BRAGI GmbH**, München (DE)

(*) Notice: Subject to any disclaimer, the term of this patent is extended or adjusted under 35 U.S.C. 154(b) by 0 days.

(21) Appl. No.: **15/641,808**

(22) Filed: **Jul. 5, 2017**

(65) **Prior Publication Data**

US 2018/0014108 A1 Jan. 11, 2018

Related U.S. Application Data

(60) Provisional application No. 62/359,542, filed on Jul. 7, 2016.

(51) **Int. Cl.**

H04R 5/033	(2006.01)
H04R 1/10	(2006.01)
G06F 3/16	(2006.01)
G06F 3/01	(2006.01)
G06F 1/16	(2006.01)
H04M 1/05	(2006.01)

(52) **U.S. Cl.**

CPC ***H04R 1/1041*** (2013.01); ***G06F 1/163*** (2013.01); ***G06F 1/1694*** (2013.01); ***G06F 1/1698*** (2013.01); ***G06F 3/017*** (2013.01); ***G06F 3/167*** (2013.01); ***H04M 1/05*** (2013.01); ***H04R 1/1016*** (2013.01); *G06F 2200/1636* (2013.01); *H04R 2420/07* (2013.01)

(58) **Field of Classification Search**

USPC ... 381/23.1, 26, 74, 309, 328, 367, 370, 376

See application file for complete search history.

(56) **References Cited**

U.S. PATENT DOCUMENTS

2,325,590	A	8/1943	Carlisle et al.
2,430,229	A	11/1947	Kelsey
3,047,089	A	7/1962	Zwislocki
D208,784	S	10/1967	Sanzone
3,586,794	A	6/1971	Michaelis

(Continued)

FOREIGN PATENT DOCUMENTS

CN	204244472	U	4/2015
CN	104683519	A	6/2015

(Continued)

OTHER PUBLICATIONS

Akkermans, "Acoustic Ear Recognition for Person Identification", Automatic Identification Advanced Technologies, 2005 pp. 219-223.

(Continued)

Primary Examiner — Yosef K Laekemariam

(74) *Attorney, Agent, or Firm* — Goodhue, Coleman & Owens, P.C.

(57) **ABSTRACT**

An earpiece includes an earpiece housing, a processor disposed within the earpiece housing, a memory operatively connected to the processor and disposed within the earpiece housing, and a plurality of software applications stored within the memory. The earpiece is configured to allow a user of the earpiece to select one of the plurality of software applications to run using the processor as a foreground application and allows for receiving user input into the foreground application.

12 Claims, 6 Drawing Sheets

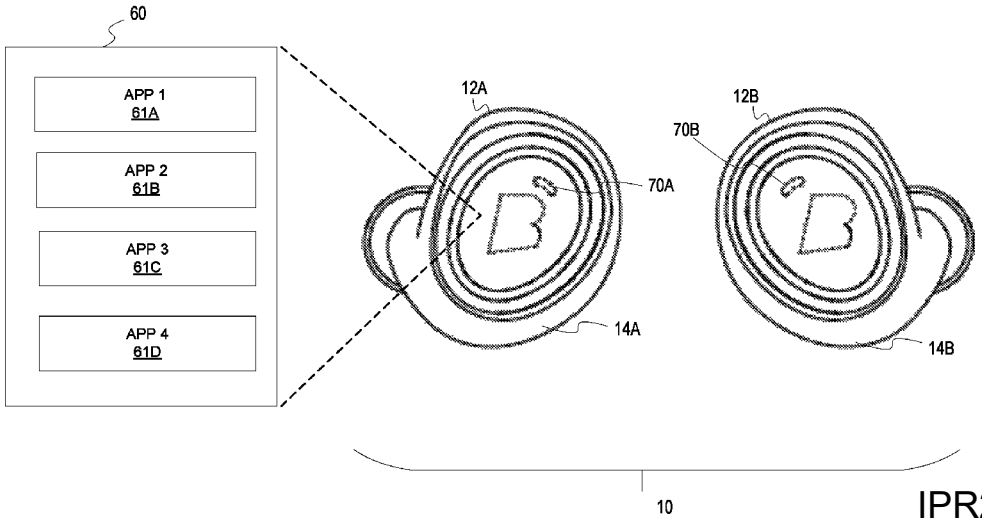

IPR2023-00901
HIMPP v. BRAGI
HIMPP 1029

(56) **References Cited**

U.S. PATENT DOCUMENTS

3,934,100 A 1/1976 Harada
3,983,336 A 9/1976 Malek et al.
4,069,400 A 1/1978 Johanson et al.
4,150,262 A 4/1979 Ono
4,334,315 A 6/1982 Ono et al.
D266,271 S 9/1982 Johanson et al.
4,375,016 A 2/1983 Harada
4,588,867 A 5/1986 Konomi
4,617,429 A 10/1986 Bellafiore
4,654,883 A 3/1987 Iwata
4,682,180 A 7/1987 Gans
4,791,673 A 12/1988 Schreiber
4,852,177 A 7/1989 Ambrose
4,865,044 A 9/1989 Wallace et al.
4,984,277 A 1/1991 Bisgaard et al.
5,008,943 A 4/1991 Arndt et al.
5,185,802 A 2/1993 Stanton
5,191,602 A 3/1993 Regen et al.
5,201,007 A 4/1993 Ward et al.
5,201,008 A 4/1993 Arndt et al.
D340,286 S 10/1993 Seo
5,280,524 A 1/1994 Norris
5,295,193 A 3/1994 Ono
5,298,692 A 3/1994 Ikeda et al.
5,343,532 A 8/1994 Shugart
5,347,584 A 9/1994 Narisawa
5,363,444 A 11/1994 Norris
D367,113 S 2/1996 Weeks
5,497,339 A 3/1996 Bernard
5,606,621 A 2/1997 Reiter et al.
5,613,222 A 3/1997 Guenther
5,654,530 A 8/1997 Sauer et al.
5,692,059 A 11/1997 Kruger
5,721,783 A 2/1998 Anderson
5,748,743 A 5/1998 Weeks
5,749,072 A 5/1998 Mazurkiewicz et al.
5,771,438 A 6/1998 Palermo et al.
D397,796 S 9/1998 Yabe et al.
5,802,167 A 9/1998 Hong
D410,008 S 5/1999 Almqvist
5,929,774 A 7/1999 Charlton
5,933,506 A 8/1999 Aoki et al.
5,949,896 A 9/1999 Nageno et al.
5,987,146 A 11/1999 Pluvinage et al.
6,021,207 A 2/2000 Puthuff et al.
6,054,989 A 4/2000 Robertson et al.
6,081,724 A 6/2000 Wilson
6,094,492 A 7/2000 Boesen
6,111,569 A 8/2000 Brusky et al.
6,112,103 A 8/2000 Puthuff
6,157,727 A 12/2000 Rueda
6,167,039 A 12/2000 Karlsson et al.
6,181,801 B1 1/2001 Puthuff et al.
6,208,372 B1 3/2001 Barraclough
6,230,029 B1 5/2001 Yegiazaryan et al.
6,275,789 B1 8/2001 Moser et al.
6,339,754 B1 1/2002 Flanagan et al.
D455,835 S 4/2002 Anderson et al.
6,408,081 B1 6/2002 Boesen
6,424,820 B1 7/2002 Burdick et al.
D464,039 S 10/2002 Boesen
6,470,893 B1 10/2002 Boesen
D468,299 S 1/2003 Boesen
D468,300 S 1/2003 Boesen
6,542,721 B2 4/2003 Boesen
6,560,468 B1 5/2003 Boesen
6,654,721 B2 11/2003 Handelman
6,664,713 B2 12/2003 Boesen
6,690,807 B1 2/2004 Meyer
6,694,180 B1 2/2004 Boesen
6,718,043 B1 4/2004 Boesen
6,738,485 B1 5/2004 Boesen
6,748,095 B1 6/2004 Goss
6,754,358 B1 6/2004 Boesen et al.
6,784,873 B1 8/2004 Boesen et al.
6,823,195 B1 11/2004 Boesen
6,852,084 B1 2/2005 Boesen
6,879,698 B2 4/2005 Boesen
6,892,082 B2 5/2005 Boesen
6,920,229 B2 7/2005 Boesen
6,952,483 B2 10/2005 Boesen et al.
6,987,986 B2 1/2006 Boesen
7,010,137 B1 3/2006 Leedom et al.
7,113,611 B2 9/2006 Leedom et al.
D532,520 S 11/2006 Kampmeier et al.
7,136,282 B1 11/2006 Rebeske
7,203,331 B2 4/2007 Boesen
7,209,569 B2 4/2007 Boesen
7,215,790 B2 5/2007 Boesen et al.
D549,222 S 8/2007 Huang
D554,756 S 11/2007 Sjursen et al.
7,403,629 B1 7/2008 Aceti et al.
D579,006 S 10/2008 Kim et al.
7,463,902 B2 12/2008 Boesen
7,508,411 B2 3/2009 Boesen
D601,134 S 9/2009 Elabidi et al.
7,825,626 B2 11/2010 Kozisek
7,965,855 B1 6/2011 Ham
7,979,035 B2 7/2011 Griffin et al.
7,983,628 B2 7/2011 Boesen
D647,491 S 10/2011 Chen et al.
8,095,188 B2 1/2012 Shi
8,108,143 B1 1/2012 Tester
8,140,357 B1 3/2012 Boesen
D666,581 S 9/2012 Perez
8,300,864 B2 10/2012 Mullenborn et al.
8,406,448 B2 3/2013 Lin
8,436,780 B2 5/2013 Schantz et al.
D687,021 S 7/2013 Yuen
8,719,877 B2 5/2014 VonDoenhoff et al.
8,774,434 B2 7/2014 Zhao et al.
8,831,266 B1 9/2014 Huang
8,891,800 B1 11/2014 Shaffer
8,994,498 B2 3/2015 Agrafioti et al.
D728,107 S 4/2015 Martin et al.
9,013,145 B2 4/2015 Castillo et al.
9,037,125 B1 5/2015 Kadous
D733,103 S 6/2015 Jeong et al.
9,081,944 B2 7/2015 Camacho et al.
9,510,159 B1 11/2016 Cuddihy et al.
D773,439 S 12/2016 Walker
D775,158 S 12/2016 Dong et al.
D777,710 S 1/2017 Palmborg et al.
D788,079 S 5/2017 Son et al.
2001/0005197 A1 6/2001 Mishra et al.
2001/0027121 A1 10/2001 Boesen
2001/0043707 A1 11/2001 Leedom
2001/0056350 A1 12/2001 Calderone et al.
2002/0002413 A1 1/2002 Tokue
2002/0007510 A1 1/2002 Mann
2002/0010590 A1 1/2002 Lee
2002/0030637 A1 3/2002 Mann
2002/0046035 A1 4/2002 Kitahara et al.
2002/0057810 A1 5/2002 Boesen
2002/0076073 A1 6/2002 Taenzer et al.
2002/0118852 A1 8/2002 Boesen
2003/0002705 A1 1/2003 Boesen
2003/0065504 A1 4/2003 Kraemer et al.
2003/0100331 A1 5/2003 Dress et al.
2003/0104806 A1 6/2003 Ruef et al.
2003/0115068 A1 6/2003 Boesen
2003/0125096 A1 7/2003 Boesen
2003/0218064 A1 11/2003 Conner et al.
2004/0070564 A1 4/2004 Dawson et al.
2004/0160511 A1 8/2004 Boesen
2005/0017842 A1 1/2005 Dematteo
2005/0043056 A1 2/2005 Boesen
2005/0125320 A1 6/2005 Boesen
2005/0148883 A1 7/2005 Boesen
2005/0165663 A1 7/2005 Razumov
2005/0196009 A1 9/2005 Boesen
2005/0251455 A1 11/2005 Boesen
2005/0266876 A1 12/2005 Boesen
2006/0029246 A1 2/2006 Boesen

(56) **References Cited**

U.S. PATENT DOCUMENTS

2006/0074671	A1	4/2006	Farmaner et al.
2006/0074808	A1	4/2006	Boesen
2006/0166715	A1	7/2006	Engelen et al.
2006/0166716	A1	7/2006	Seshadri et al.
2006/0220915	A1	10/2006	Bauer
2006/0258412	A1	11/2006	Liu
2008/0076972	A1	3/2008	Dorogusker et al.
2008/0090622	A1	4/2008	Kim et al.
2008/0146890	A1	6/2008	LeBoeuf et al.
2008/0254780	A1	10/2008	Kuhl et al.
2008/0255430	A1	10/2008	Alexandersson et al.
2009/0003620	A1	1/2009	McKillop et al.
2009/0017881	A1	1/2009	Madrigal
2009/0073070	A1	3/2009	Rofougaran
2009/0097689	A1	4/2009	Prest et al.
2009/0105548	A1	4/2009	Bart
2009/0191920	A1	7/2009	Regen et al.
2009/0245559	A1	10/2009	Boltyenkov et al.
2009/0296968	A1	12/2009	Wu et al.
2010/0033313	A1	2/2010	Keady et al.
2010/0203831	A1	8/2010	Muth
2010/0210212	A1	8/2010	Sato
2010/0320961	A1	12/2010	Castillo et al.
2011/0286615	A1	11/2011	Olodort et al.
2012/0057740	A1	3/2012	Rosal
2013/0316642	A1	11/2013	Newham
2013/0346168	A1	12/2013	Zhou et al.
2014/0072146	A1	3/2014	Itkin et al.
2014/0079257	A1	3/2014	Ruwe et al.
2014/0106677	A1	4/2014	Altman
2014/0122116	A1	5/2014	Smythe
2014/0163771	A1	6/2014	Demeniuk
2014/0185828	A1	7/2014	Helbling
2014/0222462	A1	8/2014	Shakil et al.
2014/0235169	A1	8/2014	Parkinson et al.
2014/0270227	A1	9/2014	Swanson
2014/0270271	A1	9/2014	Dehe et al.
2014/0348367	A1	11/2014	Vavrus et al.
2015/0028996	A1	1/2015	Agrafioti et al.
2015/0110587	A1	4/2015	Hori
2015/0148989	A1	5/2015	Cooper et al.
2015/0245127	A1	8/2015	Shaffer
2016/0033280	A1	2/2016	Moore et al.
2016/0072558	A1	3/2016	Hirsch et al.
2016/0073189	A1	3/2016	Lindén et al.
2016/0125892	A1	5/2016	Bowen et al.
2016/0210111	A1*	7/2016	Kraft H04R 1/1041
2016/0360350	A1	12/2016	Watson et al.
2017/0078780	A1	3/2017	Qian et al.
2017/0105681	A1*	4/2017	Singh A61B 5/6897
2017/0111726	A1	4/2017	Martin et al.
2017/0155992	A1	6/2017	Perianu et al.
2017/0180844	A1*	6/2017	Nanni H04W 76/10

FOREIGN PATENT DOCUMENTS

CN	104837094	A	8/2015
EP	1469659	A1	10/2004
EP	1017252	A3	5/2006
EP	2903186	A1	8/2015
GB	2074817		4/1981
GB	2508226	A	5/2014
WO	2008103925	A1	8/2008
WO	2007034371	A3	11/2008
WO	2011001433	A2	1/2011
WO	2012071127	A1	5/2012
WO	2013134956	A1	9/2013
WO	2014046602	A1	3/2014
WO	2014043179	A3	7/2014
WO	2015061633	A2	4/2015
WO	2015110577	A1	7/2015
WO	2015110587	A1	7/2015
WO	2016032990	A1	3/2016

OTHER PUBLICATIONS

Announcing the $3,333,333 Stretch Goal (Feb. 24, 2014).
Ben Coxworth: "Graphene-based ink could enable low-cost, foldable electronics", "Journal of Physical Chemistry Letters", Northwestern University, (May 22, 2013).
Blain: "World's first graphene speaker already superior to Sennheiser MX400", htt://www.gizmag.com/graphene-speaker-beats-sennheiser-mx400/31660, (Apr. 15, 2014).
BMW, "BMW introduces BMW Connected—The personalized digital assistant", "http://bmwblog.com/2016/01/05/bmw-introduces-bmw-connected-the-personalized-digital-assistant", (Jan. 5, 2016).
BRAGI is on Facebook (2014).
BRAGI Update—Arrival of Prototype Chassis Parts—More People—Awesomeness (May 13, 2014).
BRAGI Update—Chinese New Year, Design Verification, Charging Case, More People, Timeline(Mar. 6, 2015).
BRAGI Update—First Sleeves From Prototype Tool—Software Development Kit (Jun. 5, 2014).
BRAGI Update—Let's Get Ready to Rumble, A Lot to Be Done Over Christmas (Dec. 22, 2014).
BRAGI Update—Memories From April—Update on Progress (Sep. 16, 2014).
BRAGI Update—Memories from May—Update on Progress—Sweet (Oct. 13, 2014).
BRAGI Update—Memories From One Month Before Kickstarter—Update on Progress (Jul. 10, 2014).
BRAGI Update—Memories From The First Month of Kickstarter—Update on Progress (Aug. 1, 2014).
BRAGI Update—Memories From the Second Month of Kickstarter—Update on Progress (Aug. 22, 2014).
BRAGI Update—New People @BRAGI—Prototypes (Jun. 26, 2014).
BRAGI Update—Office Tour, Tour to China, Tour to CES (Dec. 11, 2014).
BRAGI Update—Status on Wireless, Bits and Pieces, Testing-Oh Yeah, Timeline(Apr. 24, 2015).
BRAGI Update—The App Preview, The Charger, The SDK, BRAGI Funding and Chinese New Year (Feb. 11, 2015).
BRAGI Update—What We Did Over Christmas, Las Vegas & CES (Jan. 19, 2014).
BRAGI Update—Years of Development, Moments of Utter Joy and Finishing What We Started(Jun. 5, 2015).
BRAGI Update—Alpha 5 and Back to China, Backer Day, On Track(May 16, 2015).
BRAGI Update—Beta2 Production and Factory Line(Aug. 20, 2015).
BRAGI Update—Certifications, Production, Ramping Up.
BRAGI Update—Developer Units Shipping and Status(Oct. 5, 2015).
BRAGI Update—Developer Units Started Shipping and Status (Oct. 19, 2015).
BRAGI Update—Developer Units, Investment, Story and Status(Nov. 2, 2015).
BRAGI Update—Getting Close(Aug. 6, 2015).
BRAGI Update—On Track, Design Verification, How It Works and What's Next(Jul. 15, 2015).
BRAGI Update—On Track, On Track and Gems Overview.
BRAGI Update—Status on Wireless, Supply, Timeline and Open House@BRAGI(Apr. 1, 2015).
BRAGI Update—Unpacking Video, Reviews on Audio Perform and Boy Are We Getting Close(Sep. 10, 2015).
Healthcare Risk Management Review, "Nuance updates computer-assisted physician documentation solution" (Oct. 20, 2016).
Hoyt et. al., "Lessons Learned from Implementation of Voice Recognition for Documentation in the Military Electronic Health Record System", The American Health Information Management Association (2017).
Hyundai Motor America, "Hyundai Motor Company Introduces a Health + Mobility Concept for Wellness In Mobility", Fountain Valley, California (2017).
Last Push Before The Kickstarter Campaign Ends on Monday 4pm CET (Mar. 28, 2014).

(56) **References Cited**

OTHER PUBLICATIONS

Nigel Whitfield: "Fake tape detectors, 'from the stands' footle and UGH? Internet of Things in my set-top box"; http://www.theregister.co.uk/2014/09/24/ibc_round_up_object_audio_dlna _iot/ (Sep. 24, 2014).
Staab, Wayne J., et al., "A One-Size Disposable Hearing Aid is Introduced", The Hearing Journal 53(4):36-41) Apr. 2000.
Stretchgoal—It's Your Dash (Feb. 14, 2014).
Stretchgoal—The Carrying Case for The Dash (Feb. 12, 2014).
Stretchgoal—Windows Phone Support (Feb. 17, 2014).
The Dash + The Charging Case & The BRAGI News (Feb. 21, 2014).
The Dash—A Word From Our Software, Mechanical and Acoustics Team + An Update (Mar. 11, 2014).
Update From BRAGI—$3,000,000—Yipee (Mar. 22, 2014).
Weisiger; "Conjugated Hyperbilirubinemia", Jan. 5, 2016.

* cited by examiner

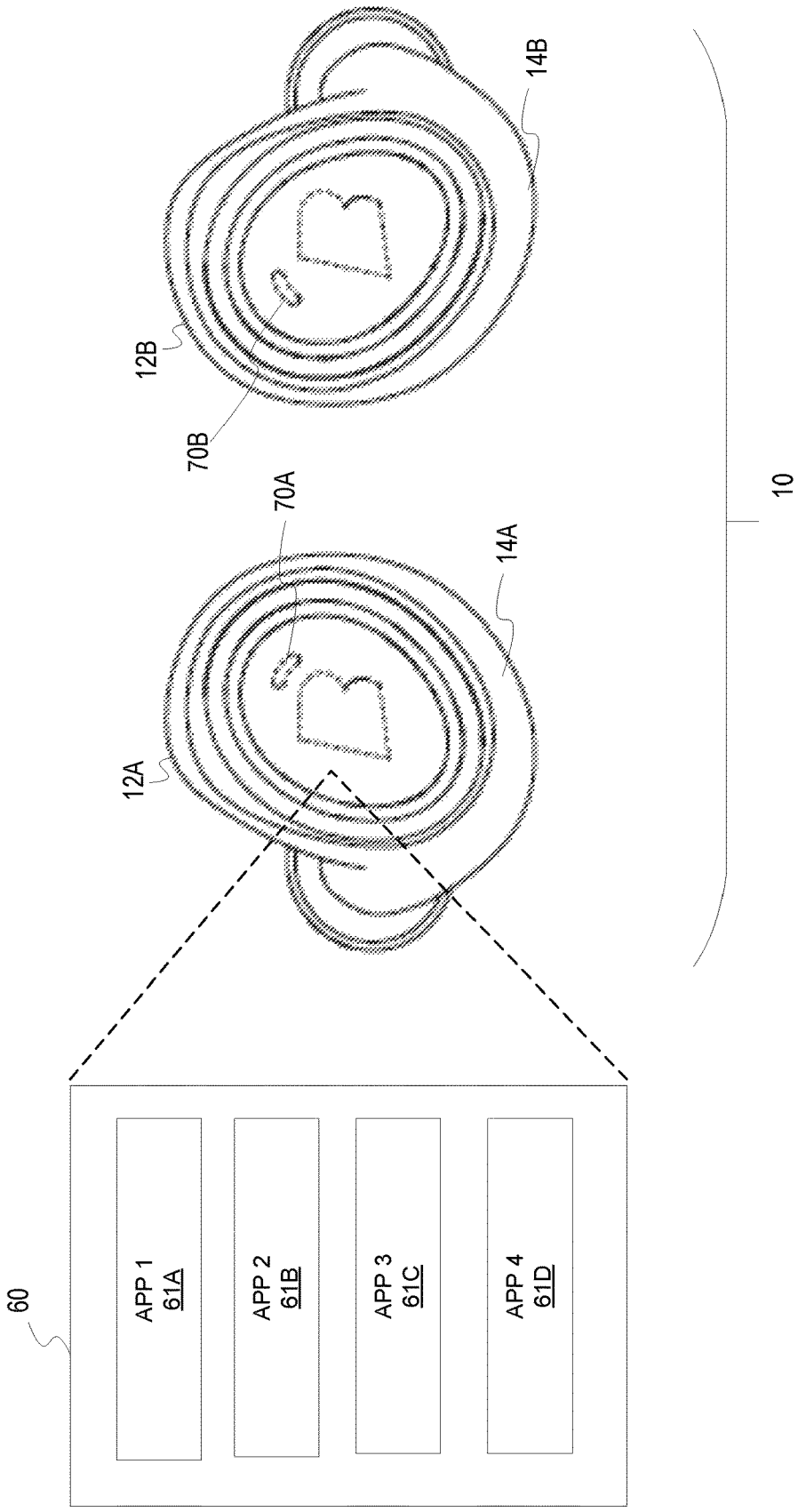
60
APP 1
61A
APP 2
61B
APP 3
61C
APP 4
61D
12A
70A
14A
12B
70B
14B
10

FIG. 1

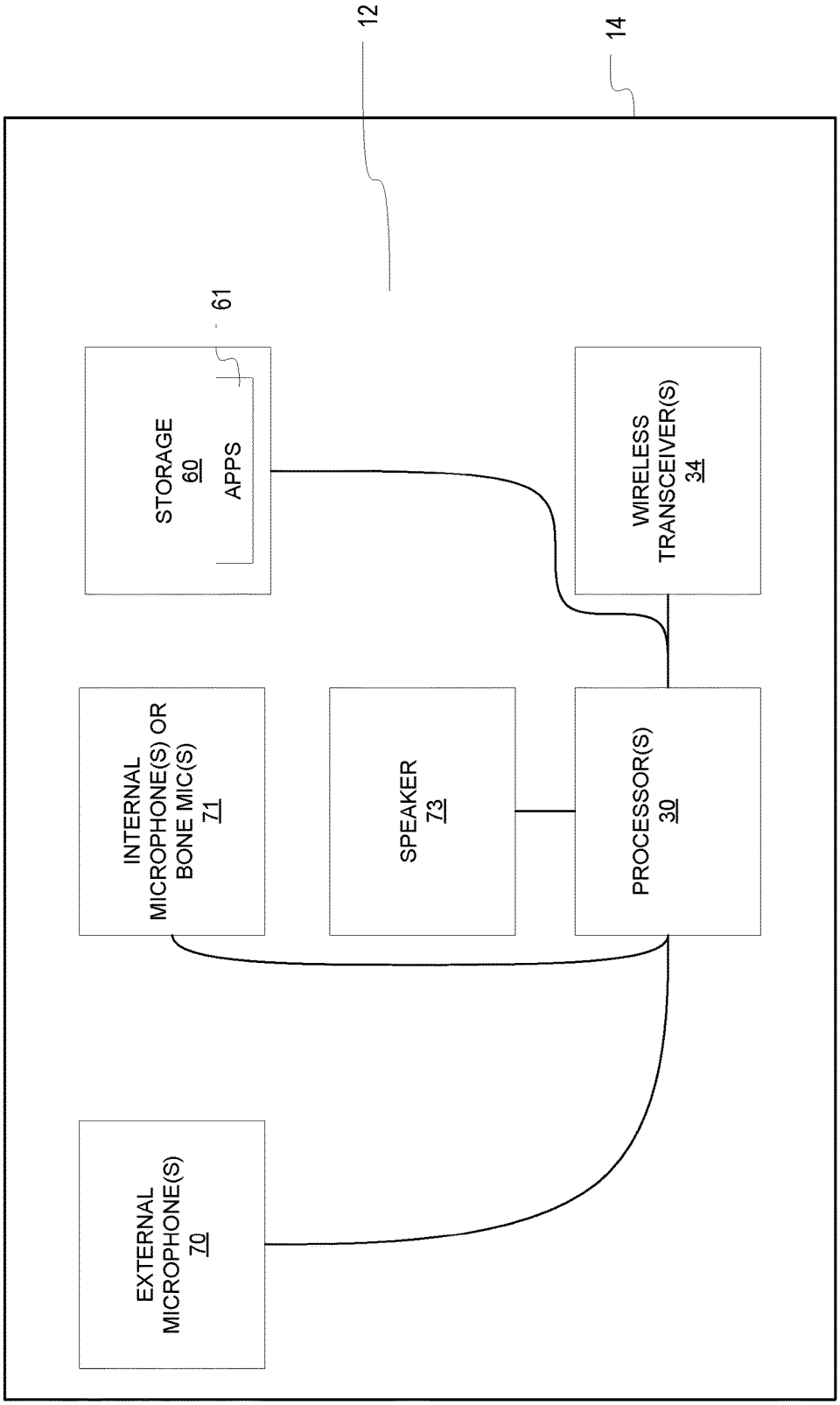
12
14
61
STORAGE
60
APPS
WIRELESS
TRANSCEIVER(S)
34
INTERNAL
MICROPHONE(S) OR
BONE MIC(S)
71
SPEAKER
73
PROCESSOR(S)
30
EXTERNAL
MICROPHONE(S)
70

FIG. 2

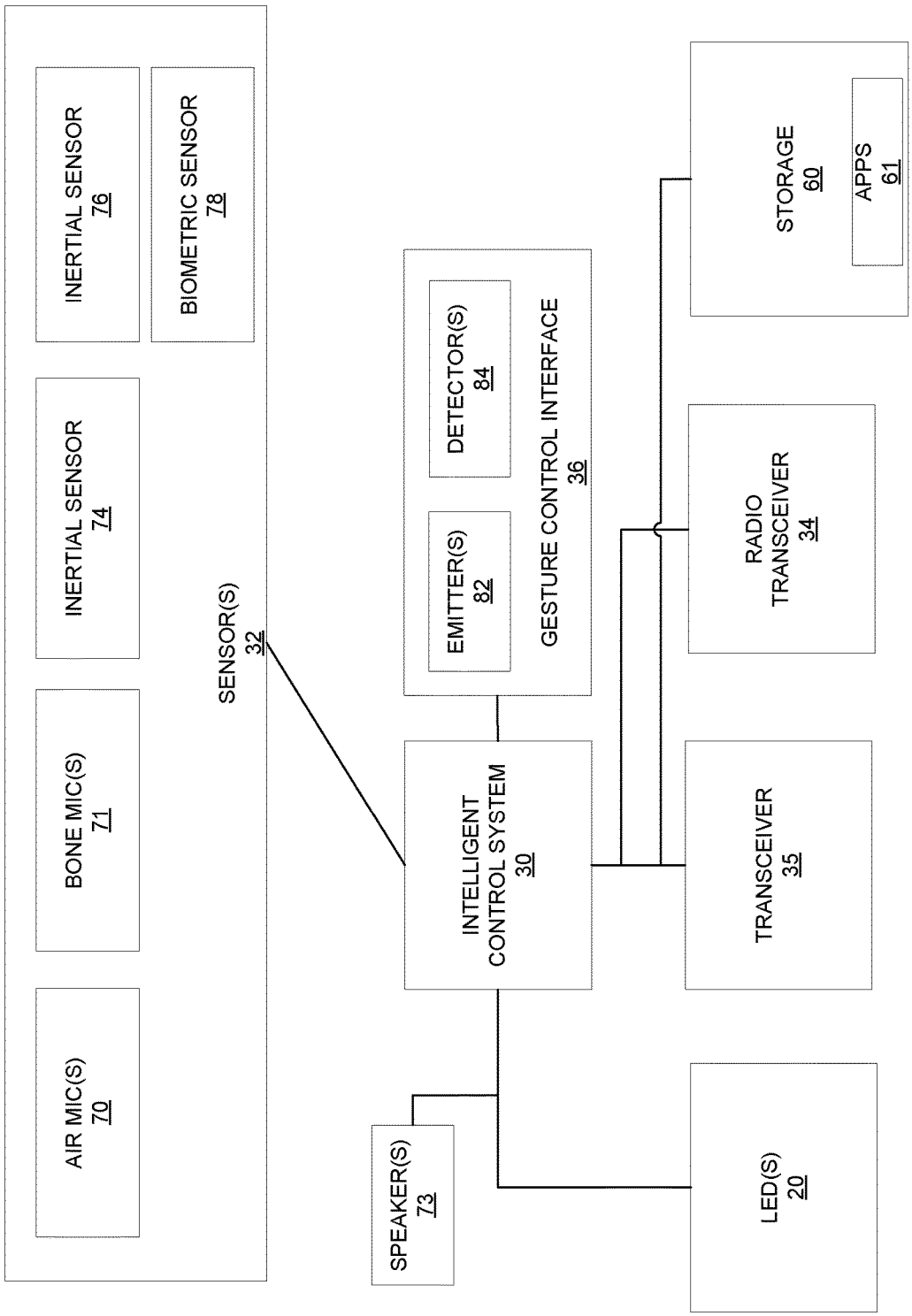
SENSOR(S)
32
AIR MIC(S)
70
BONE MIC(S)
71
INERTIAL SENSOR
74
INERTIAL SENSOR
76
BIOMETRIC SENSOR
78
SPEAKER(S)
73
INTELLIGENT
CONTROL SYSTEM
30
EMITTER(S)
82
DETECTOR(S)
84
GESTURE CONTROL INTERFACE
36
TRANSCEIVER
35
RADIO
TRANSCEIVER
34
STORAGE
60
APPS
61
LED(S)
20

FIG. 3

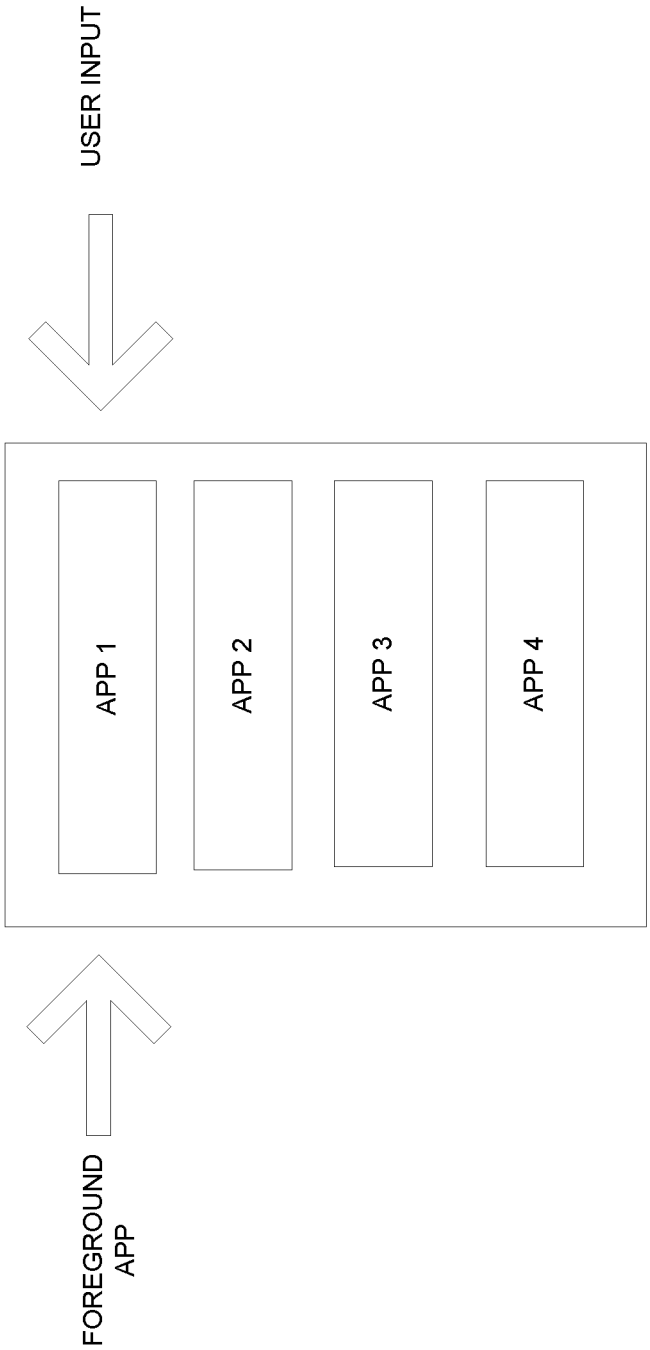

FIG. 4

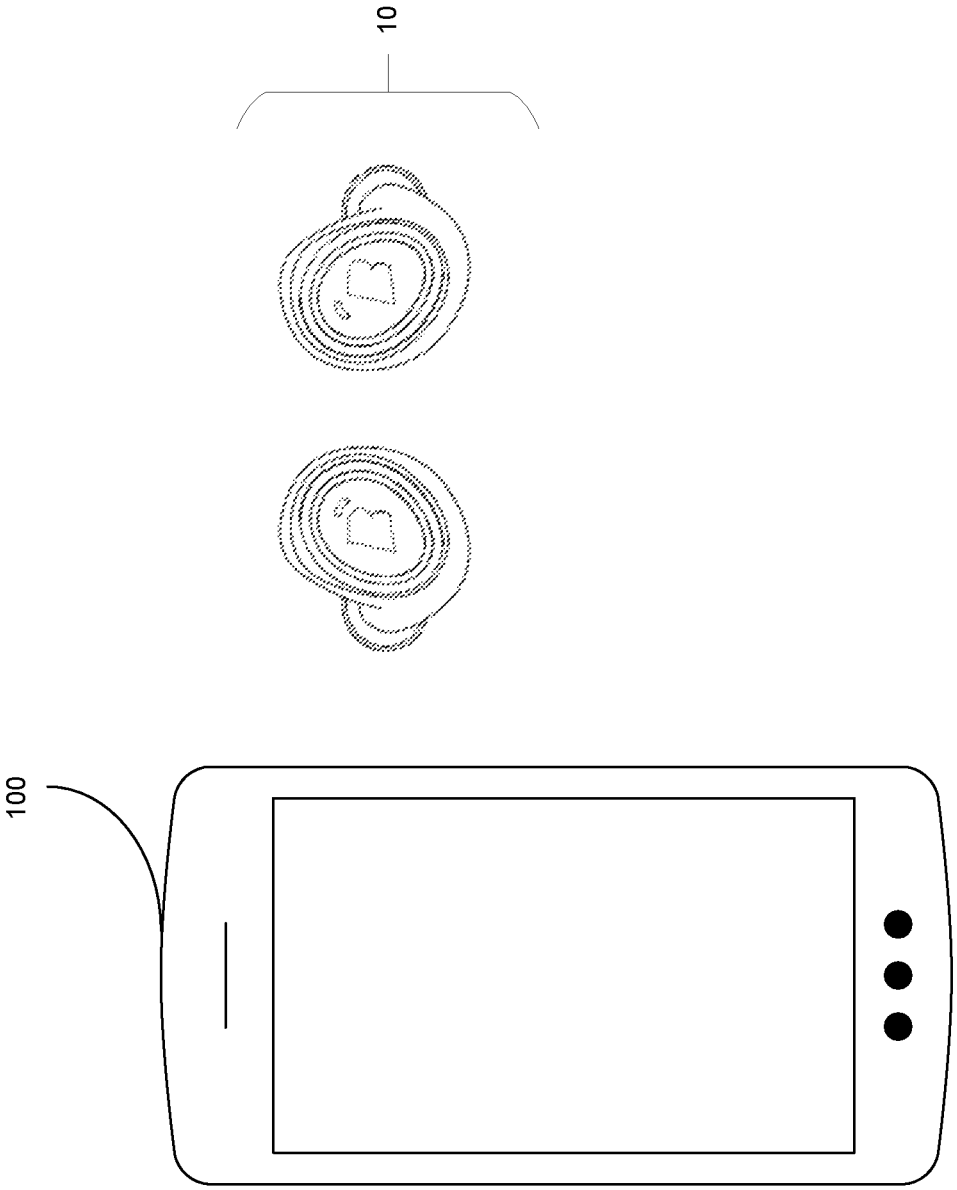

FIG. 5

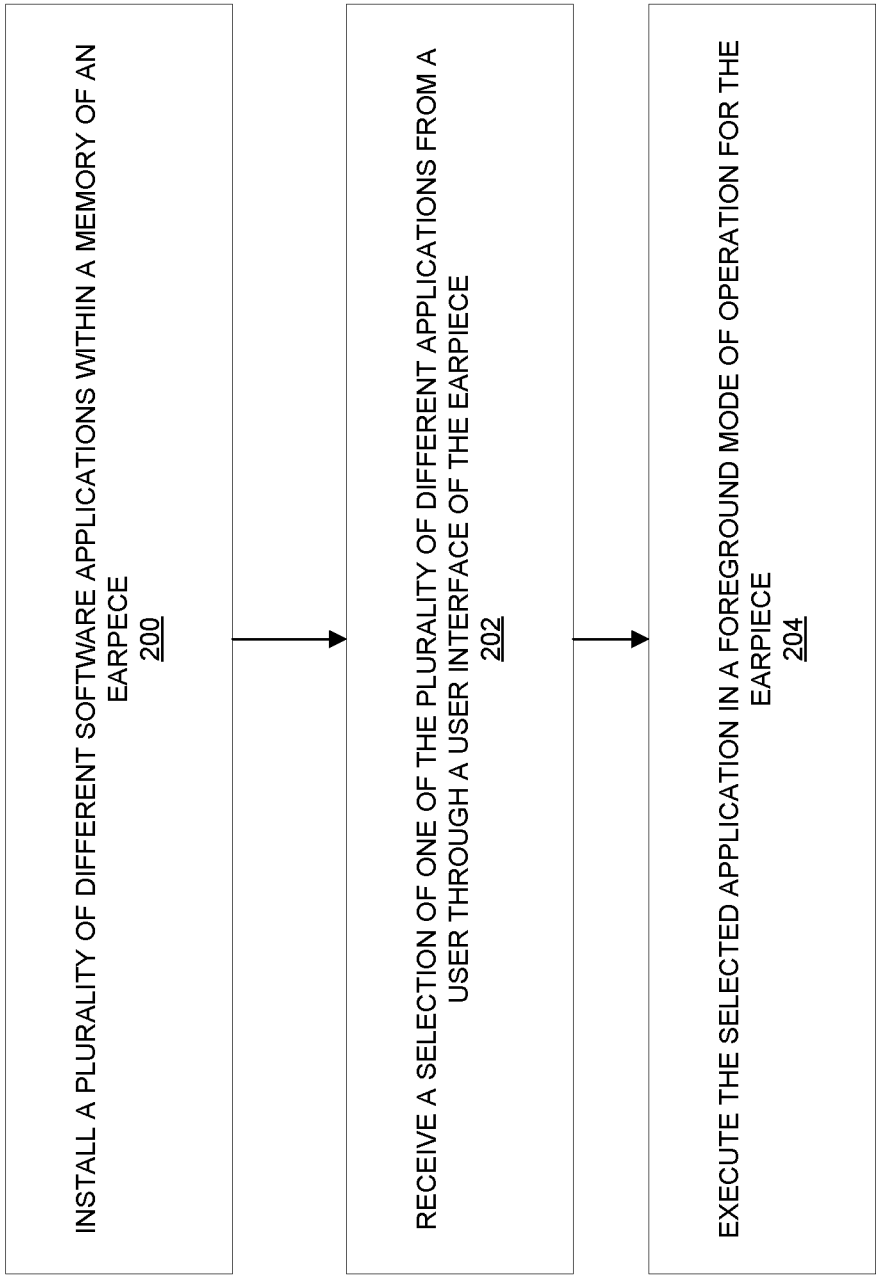
INSTALL A PLURALITY OF DIFFERENT SOFTWARE APPLICATIONS WITHIN A MEMORY OF AN EARPECE
200
RECEIVE A SELECTION OF ONE OF THE PLURALITY OF DIFFERENT APPLICATIONS FROM A USER THROUGH A USER INTERFACE OF THE EARPIECE
202
EXECUTE THE SELECTED APPLICATION IN A FOREGROUND MODE OF OPERATION FOR THE EARPIECE
204

FIG. 6

EARPIECE WITH APP ENVIRONMENT

PRIORITY STATEMENT

This application claims priority to U.S. Provisional Patent Application No. 62/359,542, filed Jul. 7, 2016, and entitled "Earpiece with App Environment", hereby incorporated by reference in its entirety.

FIELD OF THE INVENTION

The present invention relates to wearable devices. More particularly, but not exclusively, the present invention relates to ear pieces which provide an app environment.

BACKGROUND

Earpieces are generally specific purpose devices with little or no intelligence. What is needed is an intelligent earpiece with enhanced functionality which includes a wide range of processing capabilities. However, given the size constraints on earpieces (including size constrains on battery space) there are limitations in the ability to process. What is needed is an earpiece or set of earpieces which allows for a wide range of processing capabilities.

SUMMARY

Therefore, it is a primary object, feature, or advantage of the present invention to improve over the state of the art.

It is a further object, feature, or advantage of the present invention to provide an earpiece with an app environment.

It is a still further object, feature, or advantage of the present invention to provide an earpiece that allows a user to select an app to run in the foreground or the background.

Another object, feature, or advantage is to allow a user to determine which app of a plurality of different apps on an earpiece is to receive user input.

One or more of these and/or other objects, features, or advantages of the present invention will become apparent from the specification and claims that follow. No single embodiment need provide each and every object, feature, or advantage. Different embodiments may have different objects, features, or advantages. Therefore, the present invention is not to be limited to or by an objects, features, or advantages stated herein.

According to one aspect, an earpiece includes an earpiece housing, a processor disposed within the earpiece housing, a memory operatively connected to the processor and disposed within the earpiece housing, and a plurality of software applications stored within the memory. The earpiece is configured to allow a user of the earpiece to select one of the plurality of software applications to run using the processor as a foreground application and allows for receiving user input into the foreground application.

According to another aspect, a method for controlling an earpiece is provided. The method includes installing a plurality of different software applications within an earpiece, receiving a selection of one of the plurality of different software applications from a user through a user interface of the earpiece, and executing the one of the plurality of different software applications based on the selection in a foreground mode of operation for the earpiece. The method may further include receiving user input from the user of the earpiece through the user interface and receiving the user input into the one of the plurality of different software applications in the foreground mode of operation.

BRIEF DESCRIPTION OF THE DRAWINGS

FIG. **1** illustrates one embodiment of a system where one or more earpieces are configured with an app environment.

FIG. **2** is a block diagram of an earpiece which provides an app environment.

FIG. **3** is another block diagram of an earpiece which provides an app environment.

FIG. **4** illustrates an environment with multiple apps where one of the apps is considered a foreground app and which receives user input.

FIG. **5** illustrates a mobile device in communication with a set of earpieces.

FIG. **6** illustrates one example of a methodology.

DETAILED DESCRIPTION

FIG. **1** illustrates one embodiment of a system **10** which includes a left earpiece **12**A and a right earpiece **12**. The left earpiece **12**A has a left earpiece housing **14**A and the right earpiece **12**B has a right earpiece housing **14**B. An external microphone **70**A is shown at the left earpiece **12**A and another external microphone **70**B is shown at the right earpiece **12**B. A plurality of software applications or apps are shown which may be stored on a memory of one or more of the earpieces is also shown.

The earpiece **12**A allows a user to place one or more apps **61**A, **61**B, **61**C, **61**D on the device within storage or other memory **60** of the device and provides a user interface to allow a user to select one of the apps to run in the foreground or background or to select as the active app to receive user input. This app environment provides a number of different advantages. First, not all functionality needs to be built-into the operating system for the earpiece **12**A (or set of earpieces **12**A, **12**B). Instead functionality may be delivered as an app to the earpiece **12**A and a user need only store or execute the apps on their earpiece **12**A which they wish to use. Second, issues regarding limitations on processing ability and battery use are reduced when only those apps which a user wishes to use need be present on a device.

The app environment allows a user to determine which app or apps are run in the background. Because the earpiece may include any number of different sensors and combinations of sensors and perform any number of different functions, there are also many instances where it may be useful for an app to be running in the background without requiring any attention from the user. For example, an app may simply be monitoring physiological sensors associated with the user either storing the data for later use or analysis or monitoring to determine when measured physiological parameters meet or exceed some threshold of interest. Or the app may simply be monitoring environmental sensors and either storing the data for later use or analysis or monitoring to determine when measured environmental parameters meet or exceed some threshold of interest. Or the app may simply be communicating information with other wearable device, mobile devices, or other types of computing devices. There are any number of different functions that an app may be performing related to collecting, processing, or communicating data. It is to also be understood that some apps may have very specific purposes.

In operation, the device may consider one application to be a foreground app or a background app. As used herein, the term "foreground" refers to an application or task that is

currently being used by the user. Such an application or task may be interrupt-driven or real-time processes. As used herein, the term "background" refers to an application or task that is running but not currently being directly used by the user or otherwise considered to be in the background by the user. The device may determine which app or apps are running as well as which app is to be run in the foreground either automatically based on context or alternatively based on user input.

FIG. **2** illustrates one example of a block diagram of an earpiece **12**. The ear piece **12** includes an earpiece housing **14**. Disposed within the earpiece housing **13** is a processor **30**. The term "processor" as used herein means a single processor or more than one processor in operative communication. The processor **30** may include a digital signal processor, a microprocessor, microcontroller and/or other types of processors, or combinations of these or other types of processors. One or more internal microphones or bone microphones **71** may be operatively connected to the processor **30**. One or more external microphones **70** may be operatively connected to the processor **30**. One or more wireless transceivers **34** may be operatively connected to the processor. One or more speakers **73** may be operatively connected to the processor **30**. A memory or storage unit **60** may be provided which is operatively connected to the processor **30**. The memory or storage unit **60** may store one or more software applications or apps **61**. Each app may include a set of software instructions for execution by the processor **30**.

FIG. **3** illustrates another example of a block diagram of an earpiece. The earpiece includes a sensor array **32** which includes one or more sensors. Examples of the type of sensors **32** which may be present include an air microphone **70**, a bone microphone **71**, a first inertial sensor **74**, a second inertial sensor **76**, a biometric or physiological sensor **78**. Of course any number of other sensors may be present. The sensors **32** are operatively connected to an intelligent control system or processor **30**. A gesture control interface **36** is also operatively connected to the intelligent control system **30**. The gesture control interface **36** may be infrared based, ultrasound based, capacitive sensor based or use other technologies. The gesture control interface **36** may include one or more emitters **82** and one or more detectors **84**. In operation, a user may make gestures which are detected by the gesture control interface **36**. Examples of gestures may include, single taps, double taps, tap and hold, swipes in various directions or other types of gestures. One or more transceivers may also be operatively connected to the intelligent control system or processor **30**. For example, a radio transceiver **34** may be used for Bluetooth or Bluetooth Low Energy (BLE) communications. The radio transceiver **34** may be used to communicate with other wearable devices, mobile devices such as phones or tablets, or other types of computing devices. The transceiver **35** may be a near field magnetic induction (NFMI) transceiver or other type of transceiver such as may be used to communicate with another earpiece. The earpiece may further include one or more lighting elements such as LEDs **20** and may also include one or more speakers **73**. It is to be noted that the earpiece may provide a number of different ways to receive user input from a user. This may include receiving user input through the gesture control interface **36**, receiving user input from one or more inertial sensors **76**, **78** (such as receiving a head nod to indicate yes or side-to-side head movement to indicate no), receiving voice input from one or more microphones **70**, **71**, or otherwise receiving input from a user such as indirectly through another device in operative communication with the earpiece via the radio transceiver **34** or transceiver **35**.

FIG. **4** illustrates a plurality of apps stored in a machine readable storage medium such as a memory where one of the apps is selected as a foreground app. The rest of the apps may remain in the background. The app which is in the foreground may receive user input from a user. A user may select which app is the foreground app in a number of different ways. For example, where a gestural interface is present, a gesture may be associated with app selections. In one embodiment, a user may be prompted with the name of an app and then either select the app to make the app the foreground app or wait for or move on to the name of the next app in a list or circular list of available apps. In order to improve the efficiency of the user interface, it is contemplated that the list of available apps may be ordered in a manner such that the app that the user most likely wants to select is the first app in the list presented to the user. One way in which the apps may be ordered is based on which app was most recently used, which is mostly frequently used by the user, the app most frequently used by the user at the same time of day or at the same location, or based on other variables and relationships which may predict what a user's preference may be. Other methodologies which may be used may include ordering the list based on the last app used by the user, or based on pattern analyses performed based on usage history or other parameters.

Instead of using a gestural interface, other types of user interfaces may be used. For example, a user may provide voice input to indicate that the user wants to select a particular app, such as, "Bragi, run [name]" or "Bragi, run the [name] app" or "Bragi, app menu" or other voice input. Of course, other types of user interfaces may be used. For example, where the earpiece is in communication with a mobile device, the user interface of the mobile device may be used to select an app to execute. Similarly, where the earpiece is in communication with a vehicle, entertainment device, or other computing device with a user interface, the user interface of the other device may be used to select an app to execute on the earpiece. In addition, the user may schedule when the various apps are executed in advance. For example, FIG. **5** illustrates that a mobile device **100** may be in operative communication with one or more earpieces **10**. A user may use the mobile device **100** or a program executing on the mobile device **100** to select which app to run on the earpiece system **10** or to download one or more applications to the earpiece(s) **10** for execution. It is contemplated that an app need only be stored and executed on one of the earpieces and that data may be communicated to and from the other earpiece.

Any number of different apps may be present on the earpiece. This may include apps for business, apps for productivity, apps for health and wellness, apps for entertainment, and other types of apps. Apps may be apps for storing or analyzing sensor input, apps for interacting with other devices, apps for playing media or media streams, apps for augmenting environmental audio signals or other audio, or other types of apps.

It is also to be understood that one or more apps may be added to the earpiece by a user. This may occur by downloading the app to the earpiece either through direct connection or wirelessly. Thus, a user may decide which apps are present on their device and include only those apps of interest.

FIG. **6** illustrates one example of a methodology. In step **200** a plurality of different software applications are

installed within a memory of an earpiece. These software applications may come pre-installed or loaded by a manufacturer or distributor and/or may include one or more software applications installed or loaded by a user or other entity. In step **202**, a selection of one of the plurality of different applications is received from a user through a user interface of the earpiece. In step **204**. The selected application may be executed in a foreground mode of operation for the earpiece. When the application is executed in the foreground mode of operation, the application may receive user input through the user interface.

Therefore, earpieces with an app environment have been shown and described. The present invention contemplates numerous variations in the apparatus, systems, and methodologies shown and described and it is not to be limited to the specific embodiments provided herein.

What is claimed is:

1. An earpiece comprising:

an earpiece housing;

a processor disposed within the earpiece housing:

a memory operatively connected to the processor and disposed within the earpiece housing; and

a plurality of software applications stored within the memory;

wherein the earpiece is configured to allow a user of the earpiece to select one of the plurality of software applications to run using the processor as a foreground application of the earpiece; and

wherein the earpiece is further configured to receive user input from the user in the form of movement of the user detected with an inertial sensor operatively connected to the processor into the foreground application.

2. The earpiece of claim **1** further comprising a microphone and wherein the user input comprises voice input received from the user using the microphone.

3. The earpiece of claim **1** wherein the earpiece is further configured to download an additional software application to the memory using a wireless transceiver disposed within the earpiece housing.

4. A method for controlling an earpiece comprising:

installing a plurality of different software applications within an earpiece;

receiving a selection of one of the plurality of different software applications from a user through a user interface of the earpiece;

executing the one of the plurality of different software applications based on the selection in a foreground mode of operation for the earpiece; and

receiving user input from the user of the earpiece through the user interface into the one of the plurality of different software applications in the foreground mode of operation, wherein the user input comprises movement of the user received at an inertial sensor of the earpiece.

5. The method of claim **4** wherein the user input further comprises voice input received at a microphone of the earpiece.

6. The method of claim **4** wherein the user input further comprises a gesture received at a gestural control interface of the earpiece.

7. The earpiece of claim **1** wherein the earpiece is further configured to allow the user to select one of the plurality of software applications to run as a background application using the processor.

8. The earpiece of claim **7** wherein the background application run by the processor is used for monitoring physiological parameters associated with the user.

9. The method of claim **4** further comprising presenting the plurality of software applications through the user interface.

10. The method of claim **9** wherein the plurality of software applications comprises business applications, productivity applications, health applications, entertainment applications, sensor analysis applications, streaming media applications, and audio amplification applications.

11. The method of claim **9** wherein the plurality of software applications presented by the user interface are ordered by recent usage.

12. The method of claim **11** wherein the plurality of software applications presented by the user interface are based on a pattern analysis.

* * * * *