US007113680B2

(12) **United States Patent**
Hurley et al.

(10) **Patent No.: US 7,113,680 B2**
(45) **Date of Patent: Sep. 26, 2006**

(54) **HIGH DENSITY FIBER OPTIC CABLE**

(75) Inventors: **William C. Hurley**, Hickory, NC (US); **Martyn N. Easton**, Lenoir, NC (US)

(73) Assignee: **Corning Cable Systems, LLC**, Hickory, NC (US)

(*) Notice: Subject to any disclaimer, the term of this patent is extended or adjusted under 35 U.S.C. 154(b) by 0 days.

(21) Appl. No.: **11/125,375**

(22) Filed: **May 9, 2005**

(65) **Prior Publication Data**

US 2005/0196113 A1 Sep. 8, 2005

Related U.S. Application Data

(63) Continuation of application No. 10/005,325, filed on Nov. 12, 2001, now Pat. No. 6,901,191.

(51) **Int. Cl.**
G02B 6/44 (2006.01)

(52) **U.S. Cl.** **385/113**; 385/112

(58) **Field of Classification Search** 385/109–114
See application file for complete search history.

(56) **References Cited**

U.S. PATENT DOCUMENTS

4,682,850 A		7/1987	White et al.	350/96.23
4,684,214 A		8/1987	Goldmann et al.	350/96.23
4,701,016 A		10/1987	Gartside, III et al.	350/96.23
4,826,278 A		5/1989	Gartside, III et al.	350/96.23
4,932,746 A		6/1990	Calzolari et al.	350/96.23
5,067,830 A		11/1991	McAlpine et al.	385/114
5,157,752 A	*	10/1992	Greveling et al.	385/112
5,165,003 A		11/1992	Carter	385/112
5,293,443 A		3/1994	Eoll et al.	385/114
5,345,526 A		9/1994	Blew	385/112
5,379,363 A		1/1995	Bonicel et al.	385/114
5,422,973 A		6/1995	Ferguson et al.	385/112
5,445,859 A		8/1995	Lindegren et al.	428/76
5,561,730 A		10/1996	Lochkovic et al.	385/114
5,684,904 A	*	11/1997	Bringuier et al.	385/109
5,751,879 A		5/1998	Graham et al.	385/103
5,838,864 A		11/1998	Patel et al.	385/113

(Continued)

FOREIGN PATENT DOCUMENTS

DE 3913674 A1 10/1990

(Continued)

OTHER PUBLICATIONS

Corning Cable Systems, "Interlocking Armored MIC (2-24 Fiber) Riser Cables".

(Continued)

Primary Examiner—Edward J. Glick
Assistant Examiner—Thomas R. Artman
(74) *Attorney, Agent, or Firm*—Michael E. Carroll, Jr.

(57) **ABSTRACT**

A fiber optic cable includes at least one at least one bundle having a plurality of non-tight buffered optical fibers and a binder element for maintaining the integrity of the bundle. The binder element may be, for example, a binder thread. The fiber optic cable may exclude a grease or a grease-like composition being in contact with the at least one bundle for filling interstices of the cable thereby blocking water from flowing through the cable. The fiber optic cable also includes a separation layer for inhibiting adhesion between the bundles of optical fibers and the cable jacket. In another embodiment, a fiber optic cable includes a plurality of optical fibers and a binder element forming at least one bundle. The at least one bundle is surrounded by an armor layer and the fiber optic cable excludes a cable jacket within the armor layer.

22 Claims, 6 Drawing Sheets

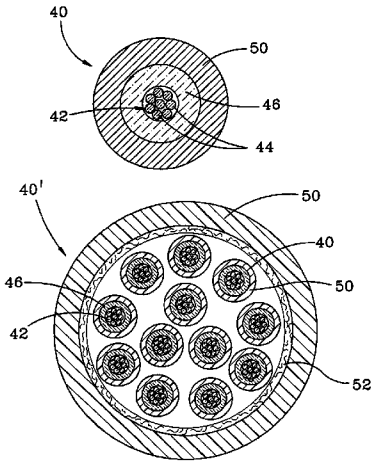

U.S. PATENT DOCUMENTS

6,167,178	A	12/2000	Navé	385/103
6,185,352	B1	2/2001	Hurley	385/114
6,205,277	B1 *	3/2001	Mathis et al.	385/106
6,256,438	B1	7/2001	Gimblet	385/109
6,321,012	B1	11/2001	Shen	385/108
6,445,859	B1 *	9/2002	Witt	385/109
6,487,346	B1 *	11/2002	Nothofer	385/109
6,546,175	B1	4/2003	Wagman et al.	385/113
6,577,796	B1 *	6/2003	Anelli et al.	385/112
6,901,191	B1 *	5/2005	Hurley et al.	385/109
2005/0281517	A1 *	12/2005	Wessels et al.	385/109

FOREIGN PATENT DOCUMENTS

DE	19546773	A1	12/1995
EP	0553990	A1	1/1993
EP	1262808	A1	12/2002
EP	1271212	A2	1/2003

OTHER PUBLICATIONS

Corning Cable Systems, "Standard Single Tube (SST) Cables".

* cited by examiner

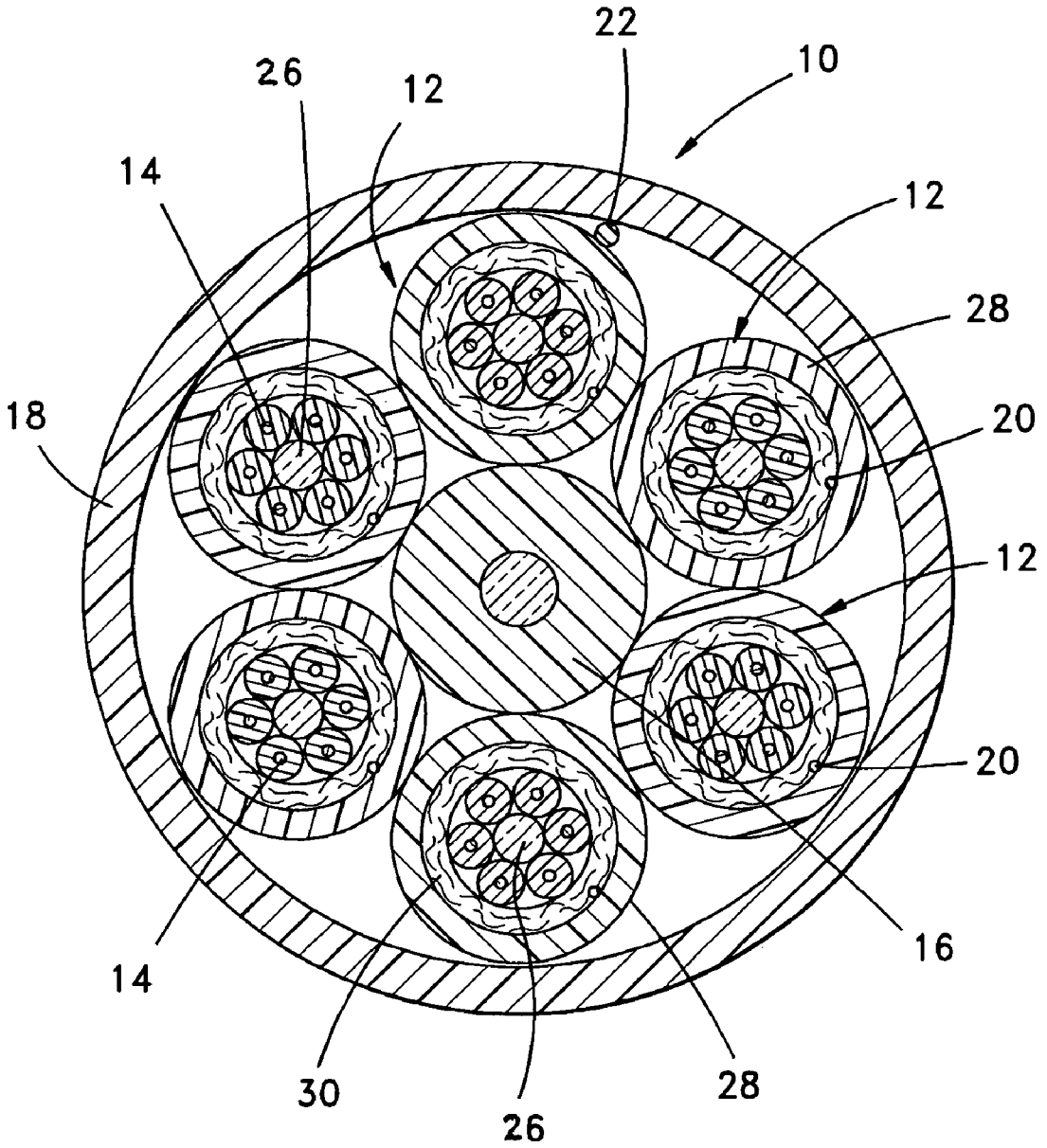

(PRIOR ART)

Fig. 1

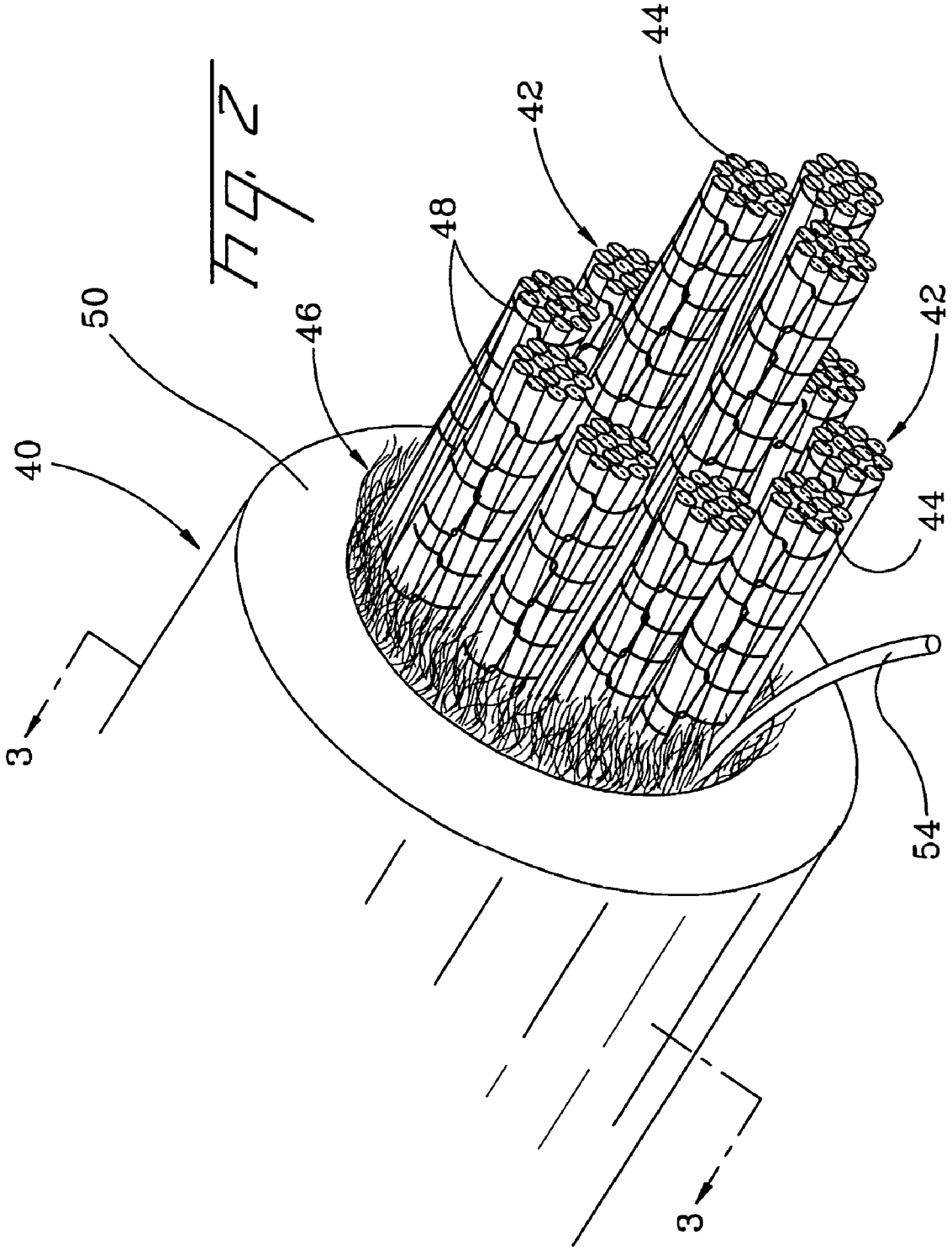
Fig. 2
40
50
46
48
42
44
42
44
54
3
3

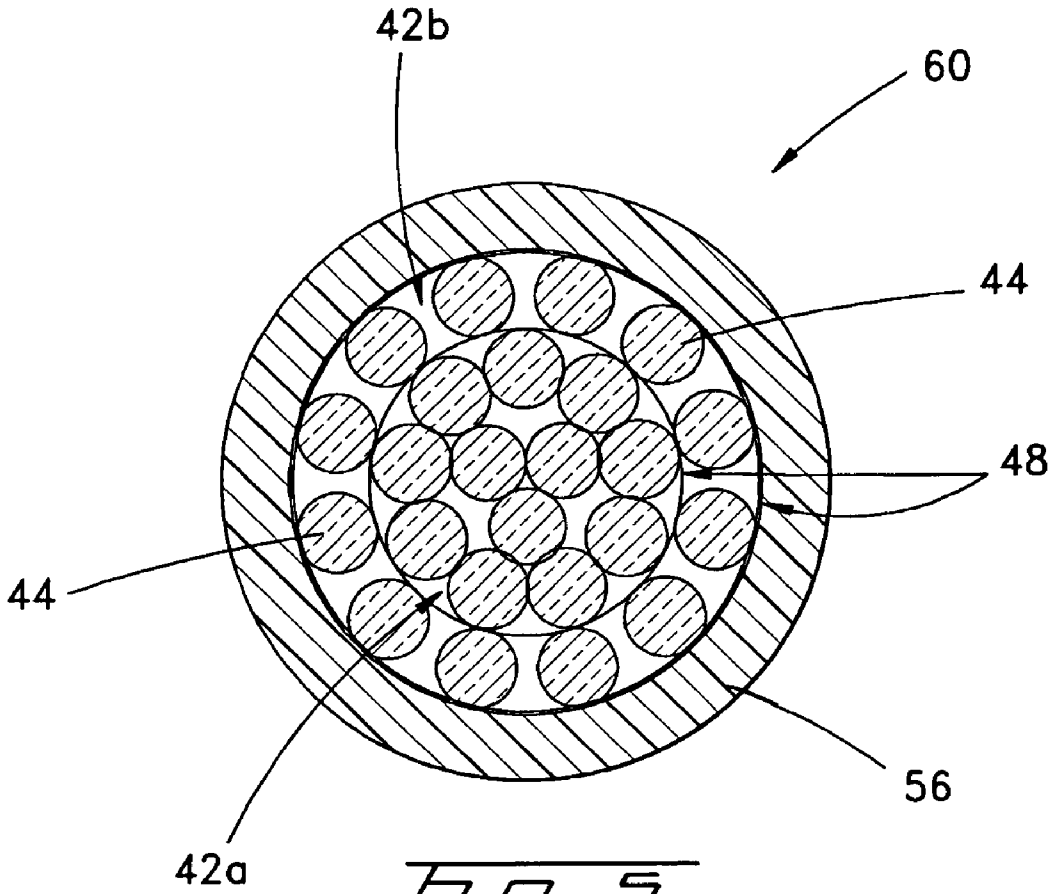

Fig. 5

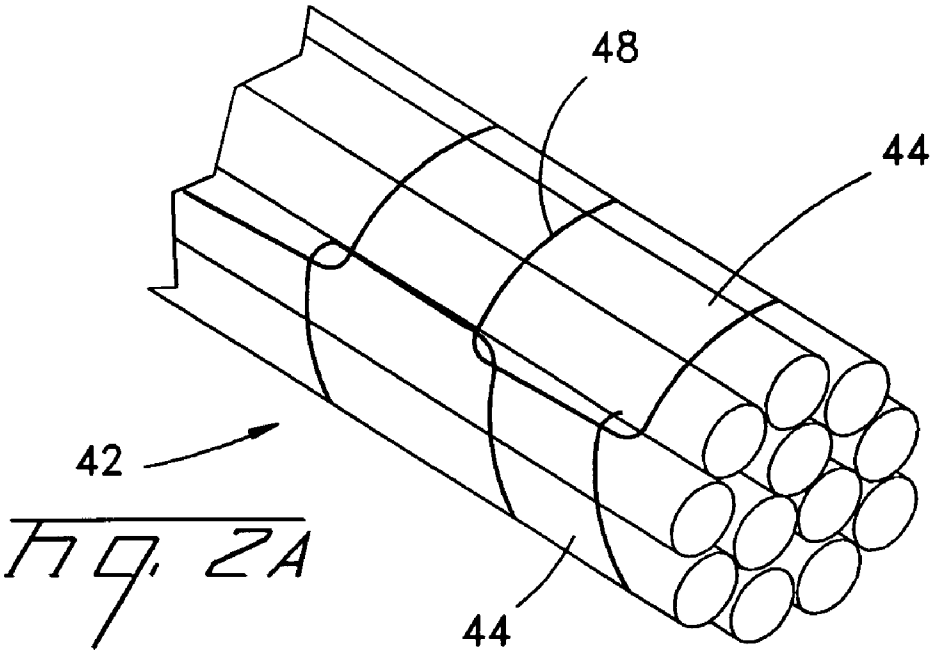

Fig. 2A

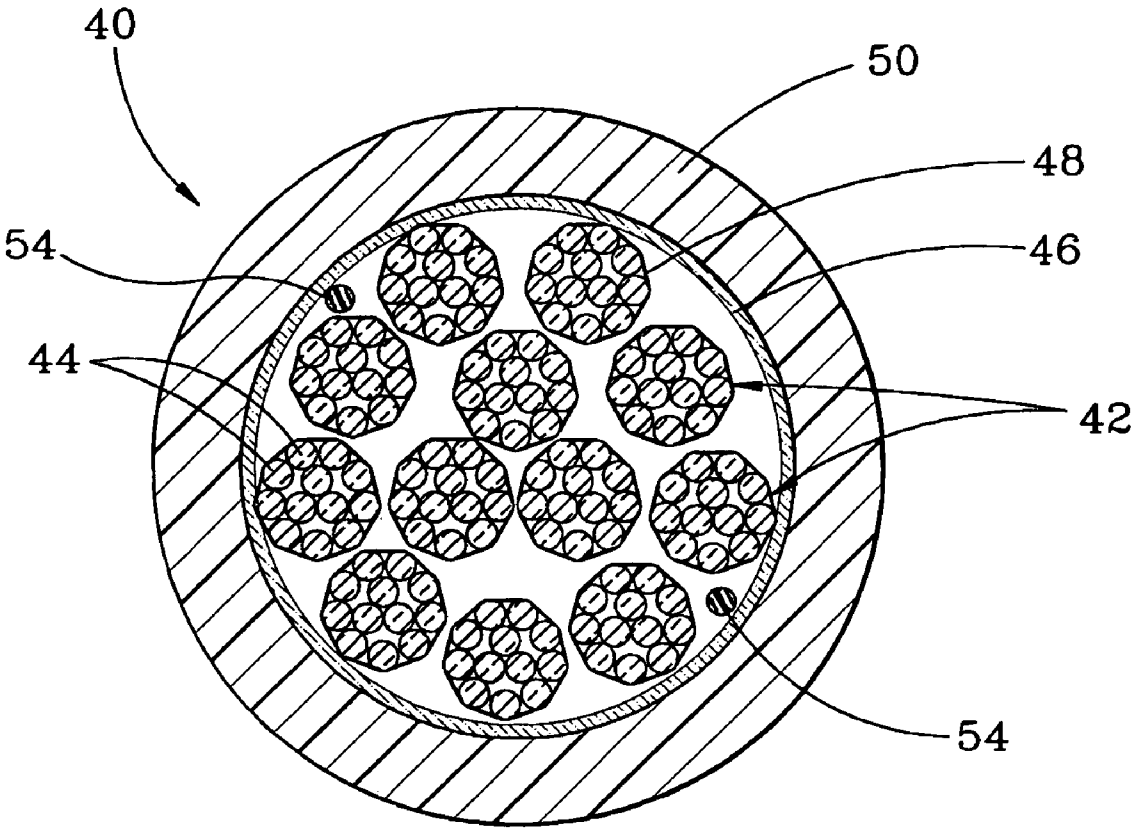

Fig. 3

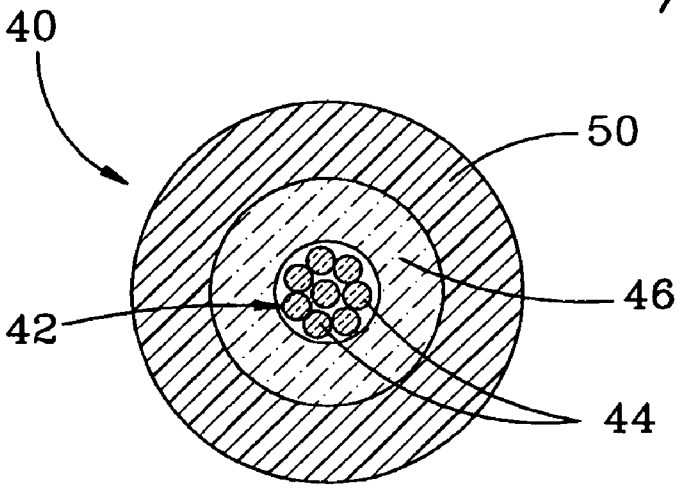

Fig. 6

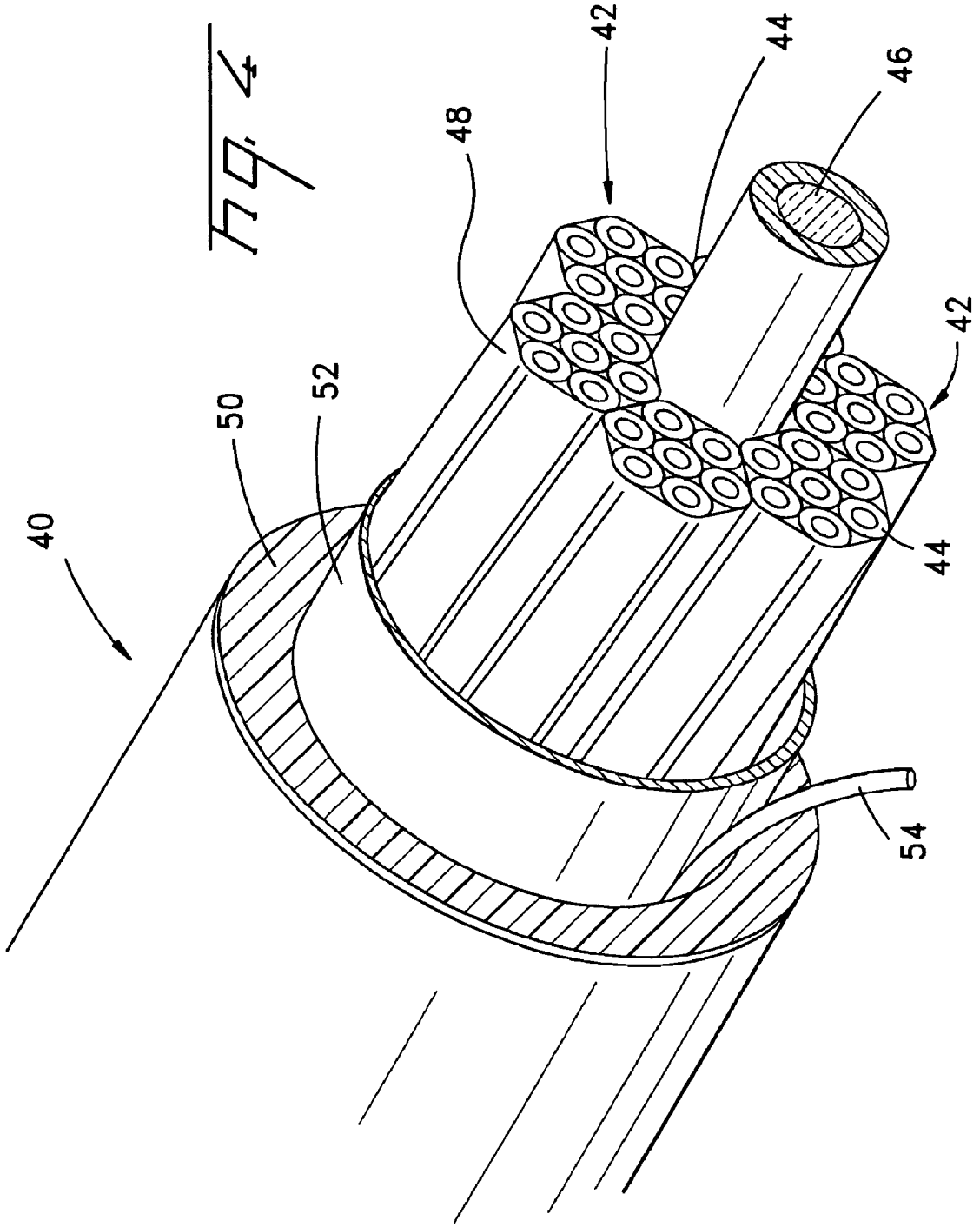

Fig. 4

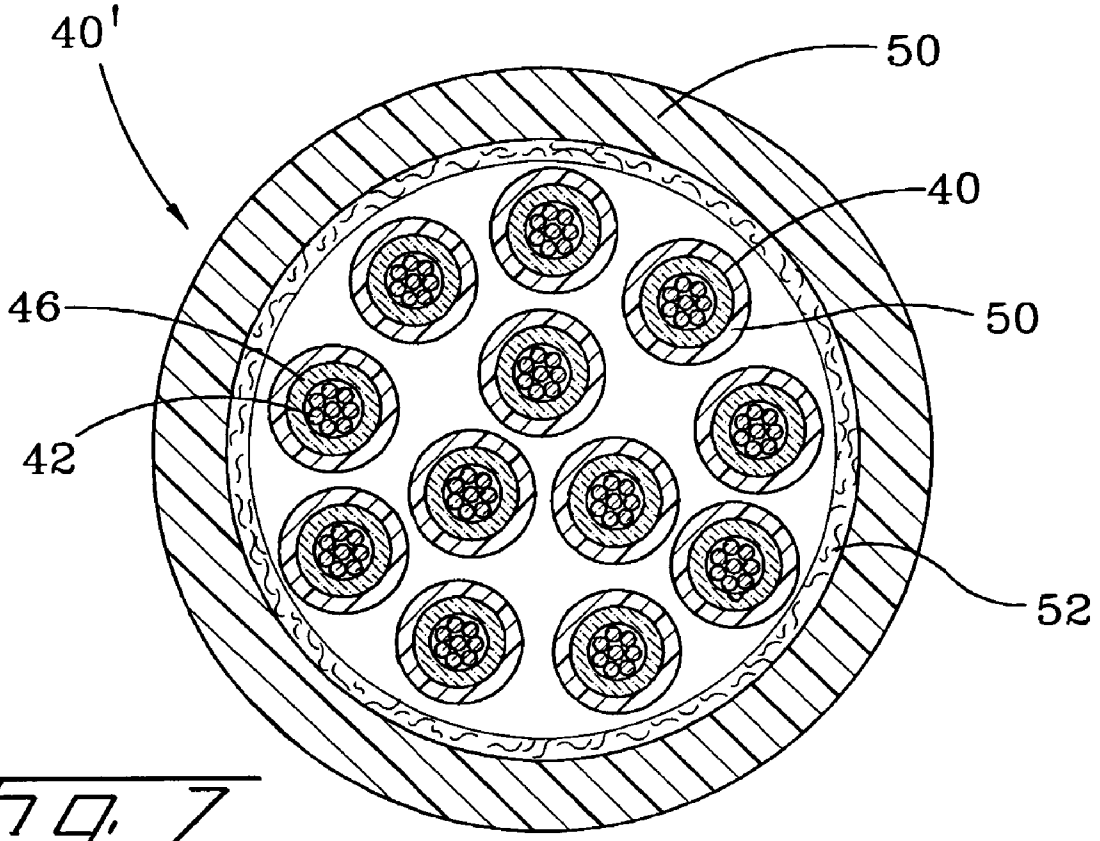

Fig. 7

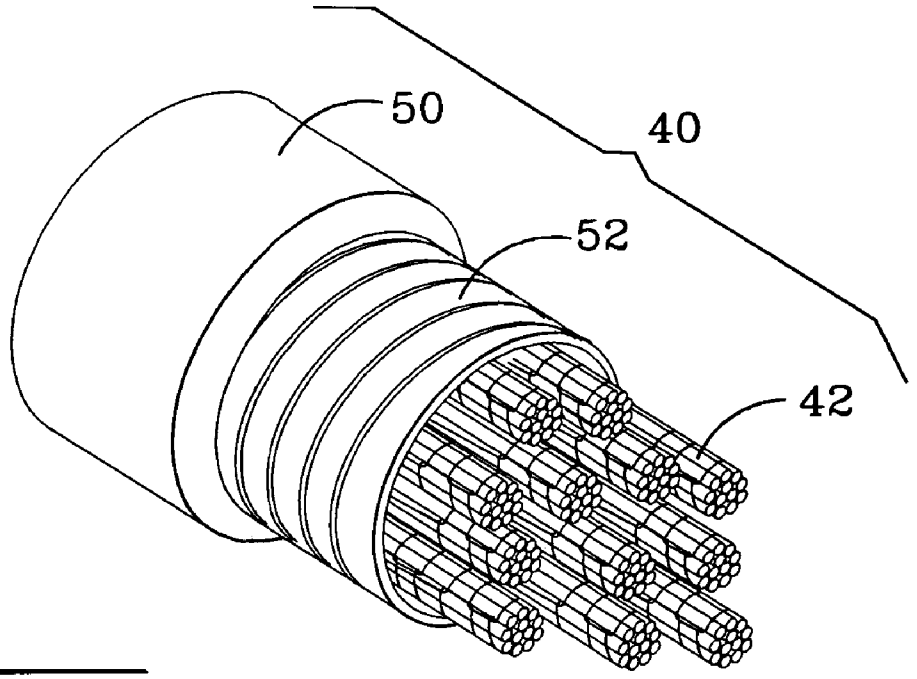

Fig. 8

HIGH DENSITY FIBER OPTIC CABLE

RELATED APPLICATIONS

The present application is a Continuation of U.S. Ser. No. 10/005,325 filed on Nov. 12, 2001 now U.S. Pat. No. 6,901,191, which is incorporated herein by reference.

FIELD OF THE INVENTION

The present invention relates generally to fiber optic cables and, more particularly, to high density fiber optic cables.

BACKGROUND OF THE INVENTION

In many applications, it is desirable for a fiber optic cable to include a plurality of optical fibers. With the increased demand for optical communications, there has been a corresponding demand to increase the number of optical fibers, i.e., the fiber count, of a fiber optic cable. By increasing the fiber count of a fiber optic cable, a single fiber optic cable would be able to support additional optical communications channels.

In order to increase the fiber count of fiber optic cables, unitized fiber optic cables have been developed. As shown in FIG. **1**, a unitized fiber optic cable **10** includes a number of bundles **12** of optical fibers **14** that are stranded about a common central strength member **16**. A unitized fiber optic cable **10** also includes a cable jacket **18** extruded about the bundles **12** of optical fibers **14**, and an optional ripcord **22** for facilitating removal of cable jacket **18**. As shown in FIG. **1**, each bundle **12** of optical fibers **14** includes at least two and, more commonly, six or twelve optical fibers that are stranded together.

Optical fibers **14** are typically tight buffered optical fibers. A tight buffered optical fiber **14** includes a single mode or multi-mode optical fiber that may be surrounded by an interfacial layer. The interfacial layer can be formed of a Teflon® containing material and is surrounded by a tight buffer layer; however, other suitable interfacial layers may be used, for example, an UV acrylate. The tight buffer layer is typically formed of a plastic, such as polyvinyl chloride (PVC). As an alternative to PVC, the tight buffer layer can be formed of a non-halogenated polyolefin, such as a polyethylene or a polypropylene. Still further, the tight buffer layer can be formed of EVA, nylon or polyester.

Each bundle **12** of optical fibers **14** also includes a central strength member **26** about which the plurality of tight buffered optical fibers is stranded. Each bundle **12** of optical fibers **14** further includes a jacket **28** that surrounds the plurality of optical fibers, and an optional ripcord **20** for facilitating removal of jacket **28**. Jacket **28** serves to protect optical fibers **14** and to maintain the bundle of optical fibers in a stranded relationship about central strength member **26**. Jacket **28** is typically formed of a polymer, such as PVC. As an alternative to PVC, jacket **28** may be formed of a fluoro-plastic, such as polyvinylidene fluoride (PVDF), a fluoro-compound as disclosed by U.S. Pat. No. 4,963,609 or blends of PVC and PVDF or PVC and polyethylene (PE). Jacket **28** is typically relatively thick and, in one embodiment, has a thickness of about 0.8 millimeters.

During fabrication, a bundle **12** of optical fibers **14** is passed through an extruder cross head and jacket **28** is extruded thereabout in order to maintain the optical fibers in position within the bundle. Since the tight buffer layer of the tight buffered optical fibers **14** is typically formed of a plastic, the plastic that is extruded to form jacket **28** will tend to adhere to the tight buffer layer of the tight buffered optical fibers **14** in the absence of a barrier therebetween. In this regard, the plastic that is extruded to form jacket **28** of a bundle **12** of optical fibers **14** may partially melt the outermost portion of the tight buffer layer of the tight buffered optical fibers **14** such that jacket **28** and the tight buffered optical fibers will adhere to one another as the plastic cools. Unfortunately, the adherence of the tight buffered optical fibers **14** to the surrounding jacket **28** generally decreases the performance of the optical fibers. In this regard, signals propagating along optical fibers **14** generally experience greater attenuation as fiber optic cable **10** is bent or flexed in instances in which the tight buffered optical fibers are adhered to jacket **28** since the optical fibers will no longer be free to move relative to jacket **28** in order to accommodate bending or flexure of fiber optic cable **10**.

Each bundle **12** of optical fibers **14** therefore also generally includes a barrier **30** disposed between the plurality of tight buffered optical fibers and jacket **28** in order to separate the tight buffered optical fibers from jacket **28** and to prevent adherence therebetween that otherwise would result from the extension of jacket **28** about optical fibers **14**. As such, optical fibers **14** can move somewhat relative to jacket **28** as fiber optic cable **10** is flexed. Barrier **30** is typically formed of a layer of strength members, such as aramid yarn, that are typically stranded about the optical fibers. The layer of strength members is also generally relatively thick and may have a thickness of about 0.2 mm in one embodiment.

Each bundle **12** of optical fibers **14** is typically stranded about common central strength member **16** of fiber optic cable **10**. Like central strength member **26** of each bundle **12** of optical fibers **14**, central strength member **16** of fiber optic cable **10** is typically formed of a relatively stiff fiber or glass reinforced plastic, or a relatively flexible combination of aramid fiber that may or may not be overcoated with a plastic material. Fiber optic cable **10** also includes a protective cable jacket **18** that surrounds each of the bundles **12** of optical fibers **14**. Cable jacket **18** is typically formed of a plastic, such as PVC. As an alternative to PVC, cable jacket **18** may be formed of a fluoro-plastic, such as PVDF, a fluoride-compound or blends of PVC and PVDF or PVC and PE.

As described above in conjunction with jacket **28** that surrounds each bundle **12** of optical fibers **14**, cable jacket **18** is also typically extruded over the plurality of bundles of optical fibers. As a result of the plastic materials that form cable jacket **18** and the jackets **28** that surround the respective bundles **12** of optical fibers **14**, cable jacket **18** and the jackets that surround the respective bundles of optical fibers may also adhere to one another following the extrusion of cable jacket **18** about the bundles of optical fibers. While the adherence of cable jacket **18** to the jackets **28** of the respective bundles **12** of optical fibers **14** does not impair the performance of fiber optic cable **10** as significantly as adherence between jacket **28** of a bundle **12** of optical fibers **14** and the tight buffer layer of the tight buffered optical fibers, the adherence of cable jacket **18** and the jackets of the respective bundles of optical fibers does disadvantageously impair the flexibility of fiber optic cable **10** somewhat.

Accordingly, fiber optic cable **10** can also include a surface coating on at least that portion of the exterior surface of jacket **28** of each bundle **12** of optical fibers **14** that otherwise would be in contact with cable jacket **18**. The surface coating is typically formed of powdered talc that

serves to prevent or reduce adhesion between cable jacket **18** and the jackets **28** of the respective bundles **12** of optical fibers **14**.

Unitized fiber optic cable **10** as depicted in FIG. **1** is generally relatively large. For example, unitized fiber optic cable **10** depicted in FIG. **1** having six bundles **12** of optical fibers **14** stranded about a central strength member **16** with each bundle of optical fibers having six tight buffered optical fibers stranded about a respective strength member **26** generally has a diameter of about 18.8 millimeters. In many applications, it is desirable to minimize the size of fiber optic cable **10** while maintaining or increasing the number of optical fibers **14** within fiber optic cable **10**. As such, it would be advantageous to develop a unitized fiber optic cable having a relatively high fiber count while also being somewhat smaller.

SUMMARY OF THE INVENTION

One aspect of the present invention is directed to a fiber optic cable including at least one bundle having a plurality of non-tight buffered optical fibers and a binder element. The binder element maintains the plurality of non-tight buffered optical fibers in the at least one bundle. A separation layer generally surrounds the at least one bundle, and a cable jacket surrounds the separation layer inhibiting adhesion between the at least one bundle and the cable jacket without surrounding each bundle of optical fibers with a respective jacket. The fiber optic cable excludes a grease or a grease-like composition being in contact with the at least one bundle for filling interstices of the cable thereby blocking water from flowing through the cable.

Another aspect of the present invention is directed to a fiber optic cable including at least one bundle having a plurality of non-tight buffered optical fibers and at least one binder thread encircling the plurality of optical fibers to thereby maintain the plurality of optical fibers in the bundle. A separation layer surrounds the at least one bundle, and a cable jacket surrounds the separation layer inhibiting adhesion between the at least one bundle and the cable jacket without surrounding each bundle of optical fibers with a respective jacket. The fiber optic cable excludes a grease or a grease-like composition being in contact with the at least one bundle for filling interstices of the cable thereby blocking water from flowing through the cable.

A further aspect of the present invention is directed to a fiber optic cable including a central member and at least one bundle. The at least one bundle includes a plurality of non-tight buffered optical fibers and a binder element. The binder element maintains the plurality of non-tight buffered optical fibers in the at least one bundle and a cable jacket surrounds the at least one bundle. A separation layer inhibits adhesion between the at least one bundle and the cable jacket. The fiber optic cable excludes a grease or a grease-like composition being in contact with the at least one bundle for filling interstices of the cable thereby blocking water from flowing through the cable.

A still further aspect of the present invention is directed to a fiber optic cable including at least one bundle having a plurality of optical fibers and a binder element. The binder element maintains the plurality of optical fibers in the at least one bundle. An armor layer surrounds the at least one bundle. The fiber optic cable excludes a cable jacket within the armor layer.

BRIEF DESCRIPTION OF THE DRAWINGS

Having thus described the invention in general terms, reference will now be made to the accompanying drawings, which are not necessarily drawn to scale, and wherein:

FIG. **1** is a cross-sectional view of a conventional fiber optic cable having a unitized design according to the prior art;

FIG. **2** is fragmentary perspective view of an exemplary fiber optic cable according to one embodiment of the present invention;

FIG. **3** is a cross-sectional view of the fiber optic cable of FIG. **2**;

FIG. **2**A is fragmentary perspective view of one bundle of optical fibers of the fiber optic cable of FIG. **2**;

FIG. **4** is a fragmentary perspective view of an exemplary fiber optic cable according to another embodiment of the present invention;

FIG. **5** is a cross-sectional view of an exemplary tube-assembly of a fiber optic cable according to another embodiment of the present invention;

FIG. **6** is a cross-sectional view of an exemplary fiber optic cable according to another embodiment of the present invention;

FIG. **7** is a cross-sectional view of an exemplary fiber optic cable according to another embodiment of the present invention; and

FIG. **8** is a fragmentary perspective view of an exemplary fiber optic cable according to another embodiment of present invention.

DETAILED DESCRIPTION OF THE INVENTION

The present invention now will be described more fully hereinafter with reference to the accompanying drawings, in which preferred embodiments of the invention are shown. This invention may, however, be embodied in many different forms and should not be construed as limited to the embodiments set forth herein; rather, these embodiments are provided so that this disclosure will be thorough and complete, and will fully convey the scope of the invention to those skilled in the art. Like numbers refer to like elements throughout.

Referring now to FIGS. **2** and **3**, a fiber optic cable **40** according to one embodiment of the present invention is illustrated. Fiber optic cable **40** of the present invention can have other configurations as described below, although the fiber optic cable of FIG. **2** will be described in more detail hereinbelow for purposes of illustration. Fiber optic cable **40** includes at least one bundle **42** having optical fibers **44** that are non-tight buffered; however, optical fibers **44** may be tight-buffered or zipped together. Optical fibers **44** may include, for example, a conventional single mode or multi-mode optical fibers; however, other suitable optical waveguides may be used. Strength members **46** such as an aramid yarns may be disposed around bundle **42**; however, in other embodiments a plurality of bundles **42** may be disposed around strength member(s) **46** disposed in the center of cable **40**. More particularly, strength members **46** include a plurality of aramid yarns stranded around two layers of bundles **42**; however, other suitable strength members may be used, for example, fiberglass yarns. Other embodiments of the present invention may include other suitable layers of bundles **42**, bundles **42** within the same cable having different numbers of optical fibers **44**, and/or different types of optical waveguides in the same cable.

Fiber optic cable **40** also includes a cable jacket **50** that surrounds bundles **42** of optical fibers **44**, and an optional ripcord **54** for facilitating removal of cable jacket **50**. Additionally, strength members **46** provides a separation layer between optical fibers **44** of bundles **42** and cable jacket **50** inhibiting the extruded cable jacket **50** from sticking to optical fibers **44** and/or bundles **42**.

Fiber optic cables of the present invention are of a dry cable design. In other words, bundles **42** of the present invention exclude a grease, or a grease-like composition in contact therewith for filling interstices of the cable thereby blocking water from flowing through interstices of the cable. However, fiber optic cables of the present invention may include lubricants allowing bundles **42** and/or optical fibers **44** to move relative to each other, for example, during bending to improve optical performance. Grease compositions are among other things messy and susceptible to dripping at high temperatures. Moreover, craftsman must clean the grease from the optical fibers before working with the optical fibers which is a time consuming process. On the other hand, dry cables of the present invention allow the craftsman to work with the optical fibers without first cleaning the grease or grease-like compositions from the optical fibers.

Fiber optic cable **40** of FIGS. **2** and **3** has twelve bundles **42** of twelve optical fibers **44** for a 144-fiber count cable having a relatively small diameter. Each bundle **42** may contain twelve different colored optical fibers **44** aiding identification of the optical fibers **44** of each bundle **42** by the craftsman. Optical fibers **44** are non-stranded, but may be stranded. Bundles **42** of the embodiment are arranged in a first layer having three bundles helically stranded, a second layer having nine bundles counter-helically stranded around the first layer and strength members **46** helically stranded around the second layer. In other embodiments, the first layer of bundles **42** may be stranded around a central member that may be a strength member, for example, aramid yarns, a glass reinforced plastic, or fiberglass yarns. In still another embodiment, a filler rod or other suitable filler member may be used rather than a bundle **42** of optical waveguides to form fiber optic cable **40**.

However, the concepts of the present invention may include any suitable number of bundles having any suitable number of optical waveguides. For example, fiber optic cable **40** may be configured as: a single layer of three bundles having twelve optical fibers for a 36 optical fiber count cable; a 72 optical fiber count cable having a single layer of six bundles stranded around a strength member; an eight-fiber count interconnect cable; or a 288 optical fiber count cable. The concepts of the present invention may also be practiced with other suitable cable constructions, for example, S-Z stranding or planetary stranding of bundles **42**.

Bundles **42** of fiber optic cable **40** include a plurality of non-tight buffered optical fibers **44** allowing direct optical fiber to optical fiber contact among optical fibers **44** and/or bundles **42**. However, other embodiments of the present invention may include tight buffered optical fibers **44**. By eliminating the tight-buffered layer around optical fiber **44**, the cable diameter may be advantageously reduced allowing for a relatively high fiber density. For example, in one embodiment a 144 optical fiber count cable has a diameter of about 10 mm or less. Embodiments including optical fibers **44** with a tight buffer layer generally increase the cable diameter with a corresponding decrease in the optical fiber density. For example, in one embodiment a 144 optical fiber count cable having tight buffered optical fibers **44** has a diameter of about 20 mm or less, whereas a conventional unitized cable construction has a diameter of about 30 mm.

Embodiments that include tight buffered optical fibers **44** may be surrounded by an interfacial layer. The interfacial layer is generally formed of a Teflon® containing material. The interfacial layer therefore serves as a release layer that provides a controlled bond between the tight buffer layer and the optical fiber so that a craftsman can easily strip the tight buffer layer from the optical fiber during a termination procedure. The tight buffer layer is typically a plastic such as PVC. However, the tight buffer layer can be formed of other plastics including non-halogenated polyolefins, such as PE or polypropylene, a fluoro-plastic such as PVDF or an ultraviolet (UV) light curable material. Although not necessary for the practice of the present invention, the tight buffer layer can also be designed to be flame resistant and to have a riser, a plenum and/or a low smoke zero halogen rating as described by U.S. Pat. No. 6,167,178, the subject matter of which is incorporated herein by reference. For example, the tight buffer layer of the tight buffered optical fibers can include aluminum trihydrate, antimony trioxide or other additives to improve the flame resistance of the tight buffer layer.

Each bundle **42** of optical fibers **44** also includes a binder element **48** that encircles the optical fibers to maintain optical fibers **44** in the bundle. In one embodiment depicted in FIGS. **2** and **2**A, at least one binder thread **48** encircles the optical fibers **44**. Fiber optic cable **40** can include various binder threads **48** or binder yarns. Binder thread **48** is preferably an air-entangled, textured, continuous multi-filament thread. In addition, binder thread **48** may be a synthetic thread that is resistant or impervious to bacterial decomposition that would otherwise create hydrogen which, in turn, may cause undesirable increases in the attenuation of the signals transmitted via optical fibers **44**. By way of example, binder thread **48** may be formed of polyester, rayon, nylon or the like. Moreover, binder thread **48** is preferably pre-shrunk.

Binder thread **48** advantageously has a large spread factor and therefore flattens once the binder thread is wrapped about optical fibers **44**. Additionally, binder thread **48** may readily deform when subjected to additional forces, such as the forces created by bending fiber optic cable **40**. Binder thread **48** typically has no more than about 25 twists per inch in order to avoid undesirable attenuation of the signals transmitted via optical fibers **44**. Most commonly, binder thread **48** has between about 2 twists per inch and about 6 twists per inch and, more preferably, about 4 twists per inch. Binder thread **48** also preferably has a TEX number between about 18 and about 60 and, more preferably, between about 30 and about 40 such as about 35 in one embodiment such that the binder thread has a fluffy feel. Additionally, binder thread **48** advantageously has a denier between about 150 and about 2600 such as about 250 in one embodiment.

Binder thread **48** also preferably includes a finish that is inert with respect to the components of fiber optic cable **40** with which the binder thread will come into contact. In this regard, the finish of binder thread **48** is preferably inert with respect to the embodiments having tight buffered optical fibers **44**, cable jacket **50** and other suitable cable components and/or materials. For example, binder thread **48** of one advantageous embodiment includes a silicone wax emulsion finish that facilitates processing of the binder thread. Binder thread **48** may also be designed to be non-wicking and/or can include a super-absorbent polymer in order to reduce or prevent water migration through fiber optic cable **40**.

Binder thread **48** is typically stranded about a respective bundle **42** of optical fibers **44** in a helical manner with a pitch of between 10 mm and 70 mm and, more preferably, about 50 mm to facilitate fabrication of the bundle of the optical fibers. As illustrated in more detail in FIG. **2**A, binder thread **48** of one advantageous embodiment includes a pair of threads, namely, a looper thread and a needle thread. As illustrated, one thread, which could be either the looper thread or the needle thread, alternately passes back and forth over the upper portion of bundle **42**, while the other thread alternately passes back and forth under the lower portion of the bundle. With reference to the embodiment of FIG. **2**A, and for purposes of example, the leftmost thread at the end of the bundle that is illustrated extends lengthwise along the bundle to a first stitch at which point the threads are secured by means of an overlooked stitch. The thread then helically encircles the lower portion of the bundle to a second overlooked stitch on the far side of the illustrated bundle at which point the threads are again secured to one another. The thread then extends lengthwise along the far side of the bundle to a third overlooked stitch before again helically encircling the lower portion of the bundle to a fourth overlooked stitch. This pattern is repeated for each thread along the length of the bundle in order to secure optical fibers **44** together in an integral manner. In this embodiment, the looper thread and the needle thread are typically secured to one another at a plurality of stitch locations along the length of the bundle of optical fibers, typically at a pitch of 10 mm to 70 mm and, more preferably, at a pitch of 50 mm, by means of an overlooked stitch. The resulting binder thread has a zig-zag appearance and is therefore sometimes termed a zig-zag binder.

Further, binder thread **48** can include indicia, such as an identification marking or a color, in order to identify the respective bundle of optical fibers encircled by the binder thread and to distinguish one bundle from another. For example, one white binder thread **48** may be used with a set of twelve different colored binder threads **48** identifying twelve bundles **42**; however, two sets of twelve different colored binder threads **48** may be used to identify a plurality of bundles **42**.

Binder thread **48** securely maintains the plurality of optical fibers **44** within bundle **42**, while also maintaining the shape and size of the bundle of optical fibers such that the optical fibers need not be disposed within a respective jacket or buffer tube as required by conventional fiber optic cables. By eliminating the jacket or buffer tube in which a bundle of optical fibers were traditionally disposed, the resulting bundle of optical fibers and, in turn, fiber optic cable **40**, can be reduced in size relative to a conventional fiber optic cable having the same number of optical fibers. Moreover, binder thread **48** inhibits optical fibers **44** from being entangled with, for example, aramid fibers.

While a binder thread, such as those described above are advantageous for maintaining optical fibers **44** in a bundle **42**, each bundle of optical fibers can include other types of binders, if so desired. For example, binder element **48** may be formed of a tape or a film, such as a polymer film, that is wrapped about optical fibers **44** as depicted in FIG. **4**. In contrast to the polymer jackets that surround the individual bundles of optical fibers of conventional unitized fiber optic cables, the polymer film is generally quite thin, such as between about 1 mil and 10 mils in one embodiment. Additionally, since the polymer film can be wrapped about the bundle **42** of optical fibers **44** and need not be extruded, the polymer film can be wrapped directly about the optical fibers and no barrier is required between the polymer film and the optical fibers since the polymer film will not adhere to the tight buffer layer and/or optical fiber in the same manner that an extruded polymeric jacket would adhere to the tight buffer layer of the tight buffered optical fibers of a conventional unitized fiber optic cable. Although the polymer film can be formed of various materials, the polymer film of one embodiment is formed of polyester, such as a polyethylene terephthalate, having a thickness of about 1 mil. For example, the polymer film may be a MYLAR® film having indicia, for example, different colors to identify different bundles **42**. Additionally, bundle **42** may also be disposed within a soft housing such as disclosed in U.S. patent application Ser. No. 09/966,646 filed on Sep. 28, 2001, which is incorporated herein by reference.

Cable jacket **50** can be formed of various materials, but is typically formed of a plastic, such as PVC. As an alternative to the PVC, cable jacket **50** may be formed of other plastics including fiber-reinforced polyethylene, a fluoro-plastic, such as PVDF, a fluoro-compound as disclosed by U.S. Pat. No. 4,963,609, blends of PVC and PVDF, blends of PVC and PE, or other suitable polymeric blends. As described above in conjunction with the tight buffer layer of the tight buffered optical fibers **44**, cable jacket **50** can also be designed to have increased flame resistance such that the fiber optic cable has a riser, a plenum and/or a low smoke zero halogen rating. In this regard, cable jacket **50** can include aluminum trihydrate, antimony trioxide or other additives that increase the flame resistance of the cable jacket as known to those skilled in the art and as described by U.S. Pat. No. 6,167,178. Additionally, cable jacket **50** can be designed to be resistant to UV light, if so desired.

Cable jacket **50** is typically extruded about the plurality of bundles **42** of optical fibers **44**. Since bundles **42** of optical fibers **44** need not be jacketed as described below, fiber optic cable **40** preferably includes a separation element and/or layer **52** (FIG. **4**) for inhibiting adhesion between the plurality of bundles of optical fibers and cable jacket **50**. Separation element **52** includes a separation layer disposed within cable jacket **50** and surrounding the plurality of bundles **42** of optical fibers **44**. Separation layer **52** is preferably formed of a material having a melting point that is greater than the respective melting point(s) of cable jacket **50** and, if used, the tight buffer layer of the tight buffered optical fibers **44** in order to inhibit adherence between cable jacket **50** and the bundles of optical fibers. For a cable jacket **50** formed of PVC having a melting temperature of 190° C., separation element **52** can be formed of a polyester, such as a MYLAR® film having a melting point of about 235° C.

Cable jacket **50** is typically extruded about the plurality of bundles **42** of optical fibers **44** at the melting temperature of the plastic that forms the cable jacket. By being formed of a material, such as a polyester, having a melting point greater than the melting point of the plastic that forms cable jacket **50**, separation layer **52** does not melt as cable jacket **50** is extruded thereover. As such, separation layer **52** inhibits adherence between cable jacket **50** and the bundles **42** of optical fibers **44** such that the optical fibers are able to move somewhat relative to cable jacket **50** as fiber optic cable **10** is flexed or bent, thereby permitting optical signals to be transmitted via the optical fibers without disadvantageous optical attenuation as fiber optic cable **10** is bent or flexed.

As shown in FIG. **2**, strength members **46**, for example an aramid yarn such as Kevlar®, at least partially performs as separation layer **52** while providing tensile strength to fiber optic cable **40**. However, other suitable strength members **46** may be used, for example, Zylon®, Vectran®, Technora®, or Spectra®. Strength members **46** may have a parallel

direction of lay relative to bundles **42** of optical fibers **44** or may be stranded about bundles **42**. However, in order to reduce the quantity of aramid yarns used for coverage, rather than strength, separation layer **52** can be formed of various other tapes, films, threads and/or fibrous materials. For example, separation layer **52** can be formed from a plurality of Kevlar® ends and a plurality of polyester yarn ends stranded around a bundle **44**. In each of these embodiments, however, separation layer **52** is designed to inhibit adhesion between the plurality of bundles **42** of optical fibers **44** and cable jacket **50**. Moreover, separation layer **52** of each of these embodiments is generally relatively thin so as not to unnecessarily increase the size of fiber optic cable **40**.

Separation layer **52** can be formed of other, non-polymeric materials, if so desired. For example, separation layer **52** can be formed of a water swellable tape in order to increase the water resistance of fiber optic cable **40**. Additionally, a separation layer **52** may be formed of a MYLAR® film having a thickness of about 1 mil.

Separation element **52** can be formed in other manners without departing from the spirit and scope of the present invention. For example, in the embodiment of fiber optic cable **40** depicted in FIG. **4**, each bundle **42** of optical fibers **44** includes a polymer film **48** surrounding the plurality of tight buffered optical fibers **44**; however, optical fibers **44** may be non-tight buffered. By appropriately designing polymer film **48**, polymer film **48** not only serves as the binder for the respective bundle **42** of optical fibers **44**, but also serves as the separation element. In this regard, polymer film **48** is preferably formed of a material having a melting point greater than the melting point of the plastic that forms cable jacket **50**. For example, for a fiber optic cable **40** having a cable jacket **50** formed of PVC having a melting point of 190° C., polymer film **48** can be formed of a polyester, such as a MYLAR® film, having a melting point of 235° C. As such, the polymer film **48** surrounding each bundle **42** of optical fibers **44** will not melt as cable jacket **50** is extruded about the plurality of bundles of optical fibers. Thus, polymer film **48** will serve to inhibit adhesion between cable jacket **50** and the plurality of tight buffered optical fibers **44** of each bundle **42**.

Still further, separation element **52** can be formed of a surface coating on each bundle **42** of optical fibers **44**. In this regard, the surface coating is preferably applied to at least that portion of each bundle **42** of optical fibers **44** that would otherwise contact cable jacket **50**. The surface coating is preferably formed of a material that also has a melting point greater than the melting point of the plastic from which cable jacket **50** is formed. For example, the surface coating may be formed of powdered talc that is applied to the outer surface of the plurality of bundles **42** of optical fibers **44**. The surface coating of talc effectively inhibits adhesion between cable jacket **50** and the tight buffered optical fibers **44** as the cable jacket is extruded thereover.

According to one embodiment of the present invention, each individual bundle **42** of optical fibers **44** is unjacketed. That is, each individual bundle **42** of optical fibers **44** is bound together by a binder element **48**, such as a binder thread, a thin polymeric layer or the like, and does not include a polymeric jacket as in conventional unitized fiber optic cables. As such, those embodiments of fiber optic cable **40** in which each bundle **42** is bound with a binder thread **48** permit direct contact between the non-tight buffered optical fibers and/or tight buffered optical fibers of adjacent bundles.

The jackets surrounding the bundles of optical fibers of conventional unitized fiber optic cables are relatively thick. Likewise, the layer of strength members, tight buffering, or the like disposed between the jacket of each individual bundle of optical fibers and the optical fibers is also relatively thick. By designing fiber optic cable **40** such that the bundles **42** of optical fibers **44** need not include a polymeric jacket and/or a layer of strength members for separating the optical fibers from the polymeric jacket, each bundle of optical fibers can be substantially reduced in size and, correspondingly, fiber optic cable **40** can be substantially reduced in size. Likewise, non-tight buffered optical fibers **44** can substantially reduce bundle size and, correspondingly, fiber optic cable **40** can be substantially reduced in size.

For comparison purposes, fiber optic cable **40** according to one embodiment of the present invention has six bundles **42** of optical fibers **44** with each bundle of optical fibers including six tight buffered optical fibers stranded about a central strength member **46**. While the size and thickness of various cable components may be varied depending upon the application, such as by varying the thickness of cable jacket **50** to alter the crush and impact resistance and/or the flame retardance, fiber optic cable **40** of one embodiment also includes a separation layer **52** of a polyester, such as a MYLAR® film surrounding the bundles **42** of optical fibers **44** and a cable jacket **50** having a thickness of 1.3 millimeters surrounding the separation layer such that fiber optic cable **40** has a total diameter of 10.9 millimeters. As described above, a conventional unitized fiber optic cable having the same number of bundles and the same number of total optical fibers generally has a diameter that is substantially larger, such as 18.8 millimeters. As such, the conventional fiber optic cable has a cross-sectional area that is about three times larger than the fiber optic cable according to the foregoing exemplary embodiment. Thus, fiber optic cable **40** of the present invention can include the same number of optical fibers **44** while being much smaller than conventional fiber optic cables. Alternatively, fiber optic cable **40** can include a greater number of optical fibers, i.e., a higher fiber count, while having the same size as a conventional fiber optic cable.

While various embodiments of fiber optic cable **40** have been described above, fiber optic cable **40** can include other features without departing from the spirit and scope of the present invention. For example, fiber optic cable **40** can be constructed to have increased water resistance by including a variety of water swellable tapes, threads and/or powders. For example, separation layer **52** can be formed of a water swellable tape as described above. In another embodiment, separation layer **52** can be formed from by an armor layer, for example, a metal or dielectric layer that may be formed from one or more pieces. In addition to acting as a separation layer, an armor layer may provide, for example, crush resistance and/or tensile strength. In yet another embodiment, bundles **42** of optical fibers **44** may be stranded around an electrical component, for example, a coaxial cable or other suitable electrical components.

While one unitized design of fiber optic cable **40** has been described hereinabove, fiber optic cable **40** may have other configurations. In this regard, the embodiment of fiber optic cable **40** depicted in FIG. **2** includes a plurality of bundles **42** of optical fibers **44** having strength members **46** and surrounded by cable jacket **50**. However, in other embodiments fiber optic cable **40** can include a number of tube assemblies surrounded by cable jacket **50** with each tube assembly including multiple bundles of optical fibers. In order to minimize the size of each tube assembly required to contain a predetermined number of optical fibers; however, each bundle of optical fibers of a tube assembly is preferably

non-jacketed as described above in conjunction with the embodiment of FIGS. **2** and **3**.

While the bundles of optical fibers may be arranged in various manners, each tube assembly **60** of fiber optic cable **40** can include concentric bundles **42** of optical fibers **44** with some bundles of optical fibers within other bundles of optical fibers as depicted in the embodiment of FIG. **5**. In this regard, tube assembly **60** includes an inner bundle **42***a* of optical fibers **44**. Inner bundle **42***a* includes a plurality of optical fibers **44** and at least one binder thread **48** encircling the plurality of optical fibers to maintain the integrity of the bundle. Although not illustrated, inner bundle **42***a* may also include a central strength member along which optical fibers **44** extend, if so desired. Inner bundle **42***a* can include any number of optical fibers **44**, but typically includes 6 or 12 optical fibers. Each optical fiber of inner bundle **42***a* preferably includes indicia, such as a color, for uniquely identifying the respective optical fiber relative to other optical fibers of the inner bundle. While inner bundle **42***a* may include various binder threads, binder thread **48** of one advantageous embodiment is an air entangled, textured, continuous multi-filament thread as described above in more detail.

Tube assembly **60** of the embodiment depicted in FIG. **5** also includes an outer bundle **42***b* of optical fibers **44** having a plurality of optical fibers positioned circumferentially about the inner bundle **42***a* of optical fibers. While outer bundle **42***b* may include any number of optical fibers, the outer bundle of the illustrated embodiment includes **12** optical fibers. Like inner bundle **42***a*, each optical fiber **44** of outer bundle **42***b* also preferably includes indicia, such as a color, for uniquely identifying the respective optical fiber relative to other optical fibers of the outer bundle. While each optical fiber **44** of inner bundle **42***a* and each optical fiber of the outer bundle **42***b* is uniquely identified, such as by having a unique color, with respect to other optical fibers of the respective bundle, optical fibers of inner bundle **42***a* may have the same colors as optical fibers of outer bundle **42***b*. However, optical fibers **44** of the inner and outer bundles that have the same color may be distinguished from one another based upon the respective bundle in which the optical fibers are included. Outer bundle **42***b* of optical fibers also includes at least one binder thread **48** encircling the plurality of optical fibers to maintain the integrity of the optical fibers of the outer bundle about inner bundle **42***a*. While inner bundle **42***a* may include various binder threads, binder thread **48** of one advantageous embodiment is also an air entangled, textured, continuous multi-filament thread as described above in more detail.

Additionally, tube assembly **60** of FIG. **5** can include a tubular member **56**, such as a buffer tube, surrounding outer bundle **42***b* of optical fibers **44** as described above. Moreover, any voids within tubular member **56** may be filled with a filling compound to inhibit the migration of water, such as disclosed in U.S. patent application Ser. No. 09/322,625 filed May 28, 1999, which is incorporated herein by reference.

As depicted in FIG. **5**, at least the outer bundle **42***b* of optical fibers **44** and, more preferably, both the outer and inner bundles of optical fibers are non-jacketed such that the cross-sectional size of the resulting tube assembly **60** can be minimized for a predetermined number of optical fibers. In order to inhibit adhesion between tubular member **56** and outer bundle **42***b* of optical fibers **44**, tube assembly **60** of FIG. **5** can also include a separation element, such as a separation layer that surrounds the outer bundle of optical fibers or a surface coating on the outer bundle of optical fibers, as described above.

By encircling inner bundle **42***a* with optical fibers **44** of outer bundle **42***b*, tube assembly **60** of the embodiment of FIG. **5** will include a dense collection of optical fibers in order to maximize the number of optical fibers included within a buffer tube of a particular cross-sectional size. However, each optical fiber of tube assembly **60** can be uniquely identified by means of the indicia, such as the color, of each optical fiber and the separation of the optical fibers into inner and outer bundles.

In one embodiment, utilizing tube assembly **60**, a plurality of tube assemblies are extended alongside a central strength member **46**, typically by being stranded about central strength member **46**. A cable jacket **50** is then extruded over the plurality of tube assemblies **54**. To inhibit adhesion between tubular members **56** of tube assemblies **60** and cable jacket **50**, fiber optic cable **40** can also include a separation element disposed between tube assemblies **60** and cable jacket **50** as described above in conjunction with the other embodiments. By including tube assemblies, each of which generally include multiple bundles of optical fibers, fiber optic cable **40** of this embodiment can include even greater numbers of optical fibers, such as 288 optical fibers or more, while continuing to minimize the overall cross-sectional size of the cable. However, each optical fiber **44** of fiber optic cable **40** of this embodiment may be uniquely identified since tubular member **56** of each tube assembly **54** may include indicia, such as a color, to uniquely identify the respective tube assembly and the indicia, such as the color, of each optical fiber and the separation of the optical fibers into inner and outer bundles permit each optical fiber of a respective tube assembly to be uniquely identified as described above.

FIG. **6** depicts fiber optic cable **40** another embodiment of the present invention. Fiber optic cable **40** of FIG. **6** includes cable jacket **50** that generally surrounds strength members **46** such as aramid yarns and bundle **42**. Bundle **42** includes a plurality of non-tight buffered optical fibers **44**, for example, eight optical fibers held together by binder thread **48** (not shown) that inhibits non-tight buffered optical fibers **44** from being entangled with strength members **46**. Fiber optic cable **40** of FIG. **6** has a optical fiber **44** on optical fiber **44** construction among non-tight buffered optical fibers **44**; however, optical fibers **44** may include a tight buffer layer. Fiber optic cable may also include a ripcord **54** for facilitating removal of cable jacket **50**. Fiber optic cable **40** of FIG. **6** has a generally round cross-section and may be used as an interconnect cable.

Conventional optical fiber ribbon interconnect cables generally include a preferential bend characteristic due to the planar orientation of the optical fibers in the optical fiber ribbon. Consequently, conventional eight-fiber ribbon interconnect cables are difficult to bend and store in tight quarters such as splice trays. Because fiber optic cable **40** has a generally round cross-section it generally does not have a preferential bend characteristic allowing for easier bending and routing in splice trays.

In one embodiment, fiber optic cable **40** of FIG. **6** includes a cable jacket **50** generally surrounding three ends of 2450 denier aramid yarns stranded around a bundle **42** having eight single-mode optical fibers **44** secured by binder thread **48** (not shown) with a cable diameter of about 3 mm or less. However, other configurations may be used and/or the cable diameter may be greater than 3 mm. However, other suitable embodiments may be practiced, for example, a cable jacket

50 generally surrounding four ends of 2450 denier aramid yarns stranded around a bundle 42 having twelve multimode optical fibers 44 secured by binder thread 48 with a cable diameter of about 3–4 mm. However, the cable diameter may be greater than 3–4 mm.

FIG. 7 depicts fiber optic cable 40' another embodiment of the present invention. The fiber optic cable 40' of FIG. 7 includes a plurality of fiber optic cables 40 of FIG. 6 stranded together forming a breakout cable. Moreover, other suitable cables of the present invention may be constructed as breakout cables. Fiber optic cables 40' includes a first layer having three fiber optic cables 40 helically stranded, a second layer having nine fiber optic cables 40 counter-helically stranded around the first layer, and a cable jacket 50. Embodiments of fiber optic cable 40' may include, for example, a separation layer 52 such as a water blocking tape, a central member, a ripcord, and/or other suitable cable components.

FIG. 8 depicts fiber optic cable 40 another embodiment of the present invention. The fiber optic cable 40 of FIG. 8 includes at least one unjacketed bundle 42 of non-tight buffered optical fibers 44 having a binding thread 48 therearound. However, optical fibers 44 may be tight buffered and/or other binding elements may be used. Bundles 42 are stranded together; however, they may be unstranded. More particularly, fiber optic cable 40 includes a first layer having three bundles 42 helically stranded and a second layer having nine bundles 42 counter-helically stranded around the first layer. Separation layer 52 surrounds bundles 42 of fiber optic cable 40 of FIG. 8 and is formed from a flexible armor. The flexible armor preferably includes a smooth inner surface for contacting bundles 42 and/or optical fibers 44. For example, CPID interlock armor available from Eastern Wire & Conduit of Ontario, Canada; however, other suitable armor may be used for separation layer 52. The flexible armor may also provide bend control to fiber optic cable 40 by inhibiting small bend radii that may cause optical attenuation. A cable jacket 50 surrounds the armor separation layer 52 of FIG. 8; however, embodiments of FIG. 8 may be practiced without cable jacket 50.

Additionally, fiber optic cable 40 of FIG. 8 does not include a bundle and/or a cable jacket within separation layer 52; however, embodiments may be practiced with bundle jackets. Eliminating a jacket from individual bundles 42 and/or a jacket around the stranded bundles 42 within the armor separation layer 52 allows for a higher optical fiber packing density within the armor separation layer 52. Embodiments of fiber optic cable 40 of FIG. 8 may include, for example, a central member, a ripcord, a water blocking tape wrapped around the bundles and/or other suitable cable components.

Many modifications and other embodiments of the invention will come to mind to one skilled in the art to which this invention pertains having the benefit of the teachings presented in the foregoing descriptions and the associated drawings. Therefore, it is to be understood that the invention is not to be limited to the specific embodiments disclosed and that modifications and other embodiments are intended to be included within the scope of the appended claims. Although specific terms are employed herein, they are used in a generic and descriptive sense only and not for purposes of limitation.

What is claimed is:

1. A fiber optic breakout cable comprising a plurality of cable units disposed within an outer jacket, wherein each of the plurality of cable units comprises:

at least one bundle, the at least one bundle comprising a plurality of non-tight buffered optical fibers and a binder element for maintaining the plurality of non-tight buffered optical fibers in the at least one bundle;

a separation layer contacting at least some of the plurality of non-tight buffered optical fibers, wherein the separation layer is formed from a plurality of tensile yarns for providing a tensile strength characteristic for the cable unit; and

a cable unit jacket, the cable unit jacket surrounding the at least one bundle and the separation layer and contacting a portion of the separation layer thereby forming the respective cable unit, wherein the separation layer inhibits adhesion between the at least one bundle and the cable unit jacket and wherein the fiber optic breakout cable excludes a grease or a gel composition being in contact with the at least one bundle for filling interstices of the cable unit thereby blocking water from flowing through the cable.

2. The fiber optic breakout cable of claim 1, wherein the plurality of cable units each have twelve optical fibers.

3. The fiber optic breakout cable of claim 1, wherein the plurality of cable units have a diameter of about 4 millimeters or less.

4. The fiber optic breakout cable of claim 1, the binder element being selected from a binder thread, a binder yarn, a thin film, and a tape.

5. The fiber optic breakout cable of claim 1, the binder element being a binder thread encirling the plurality of non-tight buffered optical fibers.

6. The fiber optic breakout cable of claim 1, the plurality of cable units being stranded around a central member.

7. The fiber optic breakout cable of claim 1, further including an armor layer.

8. The fiber optic breakout cable of claim 1, further including a plurality of strength members disposed between the outer jacket and the respective cable unit jackets of the plurality of cable units.

9. The fiber optic breakout cable of claim 1, the cable unit jacket contacting at least a portion of the separation layer being an inner surface of the cable unit jacket.

10. A fiber optic breakout cable comprising two cable units disposed within an outer jacket, wherein one of the cable units comprises:

at least one bundle, the at least one bundle comprising a plurality of non-tight buffered optical fibers and a binder element for maintaining the plurality of non-tight buffered optical fibers in the at least one bundle;

a separation layer, the separation layer being adjacent to at least some of the plurality of non-tight buffered optical fibers, wherein the separation layer is formed from a plurality of tensile yarns for providing a tensile strength characteristic for the cable unit; and

a cable unit jacket, the cable unit jacket surrounding the at least one bundle and the separation layer and having a diameter of about 4 millimeters or less, wherein the cable unit jacket contacts a portion of the separation layer, wherein the separation layer inhibits adhesion between the at least one bundle and the cable unit jacket and wherein the fiber optic breakout cable excludes a grease or a gel composition being in contact with the at least one bundle for filling interstices of the cable unit thereby blocking water from flowing through the cable.

11. The fiber optic breakout cable of claim 10, wherein the plurality of cable units each have twelve optical fibers.

12. The fiber optic breakout cable of claim 10, the binder element being selected from a binder thread, a binder yarn, a thin film, and a tape.

13. The fiber optic breakout cable of claim **10**, the binder element being a binder thread encirling the plurality of non-tight buffered optical fibers.

14. The fiber optic breakout cable of claim **10**, further including an armor layer.

15. The fiber optic breakout cable of claim **10**, further including a plurality of strength members disposed between the outer jacket and the cable unit jacket of the one cable unit.

16. The fiber optic breakout cable of claim **10**, the plurality of non-tight buffered optical fibers further including a tight buffered layer.

17. The fiber optic breakout cable of claim **10**, the cable unit jacket that contacts the a portion of the separation layer being an inner surface of the cable unit jacket.

18. A fiber optic cable comprising:

at least one bundle, the at least one bundle comprising twelve non-tight buffered optical fibers and a binder element for maintaining the non-tight buffered optical fibers in the at least one bundle;

a separation layer contacting at least one of the twelve non-tight buffered optical fibers, wherein the separation layer is formed from a plurality of tensile yarns for providing a tensile strength characteristic; and

a cable jacket, the cable jacket contacting a portion of the separation layer, wherein the separation layer inhibits adhesion between the at least one bundle and the cable jacket and wherein the fiber optic cable excluding a grease or a gel composition being in contact with the at least one bundle for filling interstices of the cable jacket thereby blocking water from flowing through the cable.

19. The fiber optic cable of claim **18**, wherein the fiber optic cable has a diameter of about 5 millimeters or less.

20. The fiber optic cable of claim **18**, the binder element being selected from a binder thread, a binder yarn, a thin film, and a tape.

21. The fiber optic cable of claim **18**, the binder element being a binder thread encirling the plurality of non-tight buffered optical fibers.

22. The fiber optic cable of claim **18**, the cable jacket contacting a portion of the separation layer being an inner surface of the cable jacket.

* * * * *

UNITED STATES PATENT AND TRADEMARK OFFICE

CERTIFICATE OF CORRECTION

PATENT NO. : 7,113,680 B2
APPLICATION NO. : 11/125375
DATED : September 26, 2006
INVENTOR(S) : William C. Hurley and Martyn N. Easton

It is certified that error appears in the above-identified patent and that said Letters Patent is hereby corrected as shown below:

Col. 15,
Claim 13, line 2 delete "encirling" and insert -- encircling -- therefor.

Col. 16, line 16;
Claim 21, line 2 delete "encirling" and insert -- encircling -- therefor.

Signed and Sealed this

Fifteenth Day of May, 2007

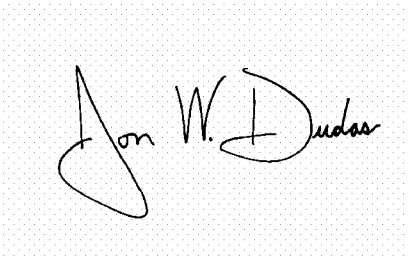

JON W. DUDAS
Director of the United States Patent and Trademark Office