US 20020085820A1

(19) United States

(12) Patent Application Publication (10) Pub. No.: US 2002/0085820 A1

Gaillard et al. (43) Pub. Date: Jul. 4, 2002

(54) CABLE ASSEMBLY HAVING RIPCORDS WITH EXCESS LENGTH AND RIPCORDS ATTACHED TO TAPE

(76) Inventors: **Pierre Gaillard**, Calais (FR); **Stefan Richter**, Hickory, NC (US); **Matthew Barber**, Cave Creek, AZ (US); **Christopher L. Johnson**, Granite Falls, NC (US); **Geoffrey Witt**, Hickory, NC (US)

Correspondence Address:
SUGHRUE, MION, ZINN, MACPEAK & SEAS, PLLC
2100 PENNSYLVANIA AVENUE, N.W.
WASHINGTON, DC 20037-3213 (US)

(21) Appl. No.: **09/750,339**

(22) Filed: **Dec. 29, 2000**

Publication Classification

(51) **Int. Cl.**[7] **G02B 6/44**

(52) **U.S. Cl.** **385/113**; 385/102; 385/109

(57) **ABSTRACT**

The invention is a cable assembly in which the ripcord is bonded or woven to the cable assembly's armor tape. This arrangement helps to prevent the ripcords from moving from their initial position, therefore allowing better dissection of a cable sheath and/or jacket. The cable assembly includes a cable core (e.g., soft buffer tubes surrounding optical fibers), a tape surrounding the cable core, at least one ripcord attached to the tape, and a cable jacket surrounding the tape. In a second embodiment of the present invention, a cable assembly includes a cable core having a predetermined axial length, a cable jacket for housing the cable core along the predetermined axial length of the cable core, and a ripcord disposed between the cable core and the cable jacket along the predetermined axial length, in a manner that the ripcord is contained within the predetermined axial length, but the ripcord has a length substantially longer that the predetermined axial length. In a preferred embodiment of the present invention, the ripcord is disposed along the predetermined axial length in a wavy shape, thus the ripcord is made "flexible", alleviating damage to the cable assembly that can occur from ripcord tension.

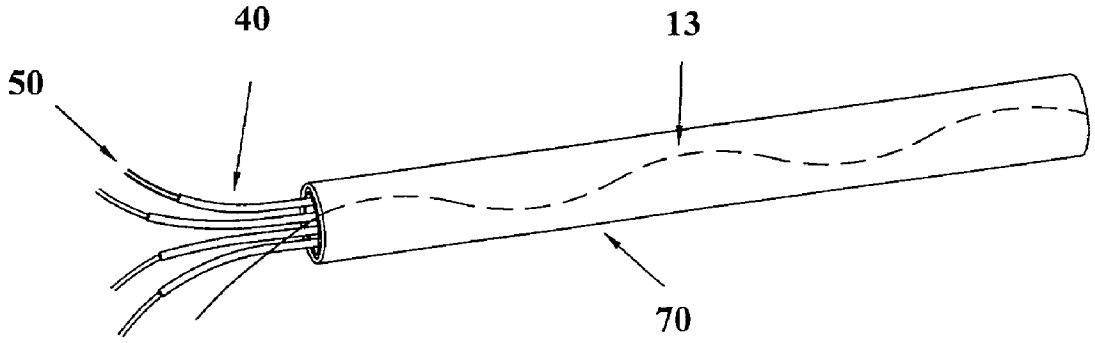

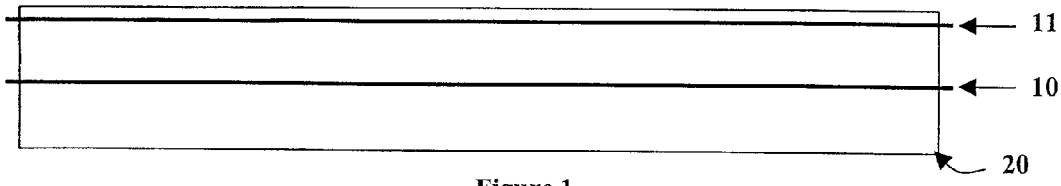

Figure 1

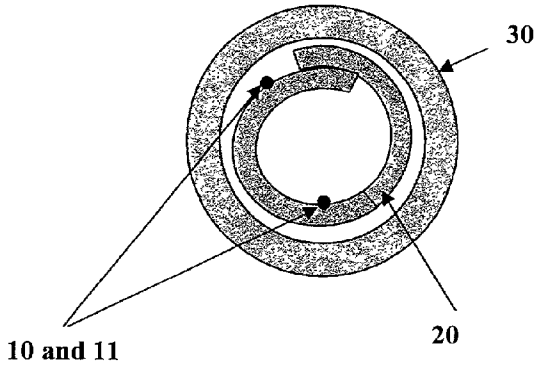

Figure 2a

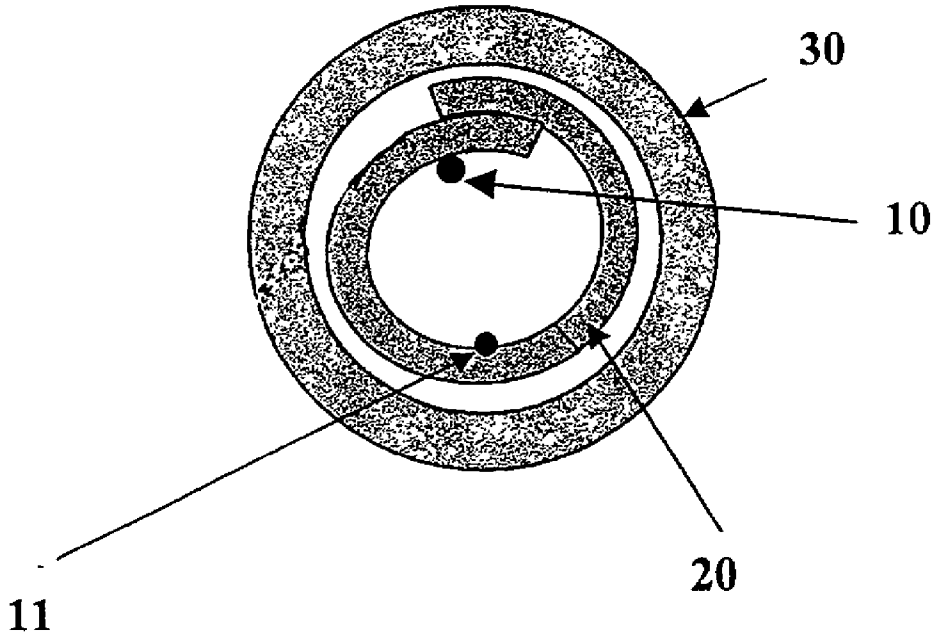

Figure 2b

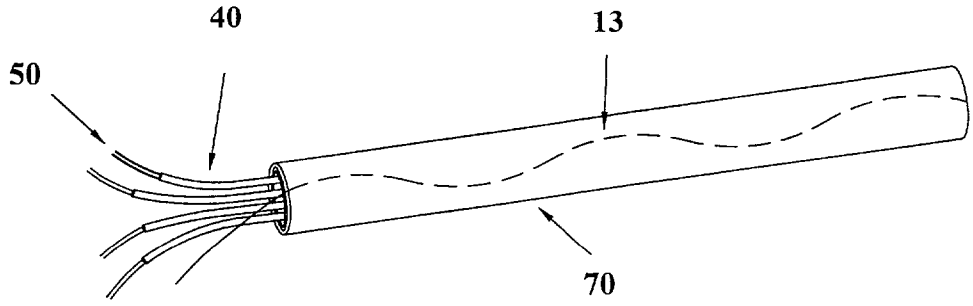

Figure 3

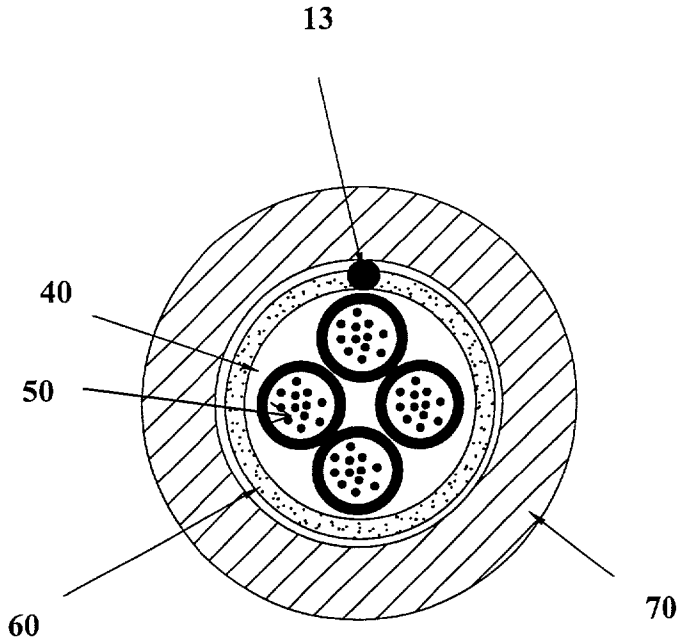

Figure 4

CABLE ASSEMBLY HAVING RIPCORDS WITH EXCESS LENGTH AND RIPCORDS ATTACHED TO TAPE

BACKGROUND OF THE INVENTION

[0001] 1. Field of Invention

[0002] This invention relates to a cable assembly in which removal of the protective jacket or sheath can be facilitated by having the ripcords attached to a tape in the cable assembly, which provides access to the underlying core. The ripcords placement in the cable assembly is also used as means for improving the ability of the cable assembly to withstand bending by using ripcords with excess length. The invention is particularly useful in optical cable assemblies, which have a tendency to be crush sensitive, and also other telecommunications cable assemblies including those containing fragile elements, such as copper wires insulated with thin, low resistance plastic such as cellular Pe.

[0003] 2. Related Art

[0004] Ripcords are used within a cable assembly to facilitate removal of a protective jacket or sheath, thus allowing direct access to the cable cores. Ripcords are generally introduced under the armor at the forming station (armored cables) or over the cable core at the jacket extruder head (dielectric cables) during the manufacture of a cable. The ripcords are disposed through the cable longitudinally or in a helical fashion having a long pitch. When two ripcords are provided, they are typically aligned to be 180 degrees apart, thereby potentially allowing for the cable jacket or sheath to be perfectly bisected. However, maintaining the position of the ripcords at 180 degrees becomes difficult during the manufacture of the cable assembly. Difficulties in maintaining the position of the ripcords can be, among other things, caused by core rotation relative to the armor, armor rotation relative to the cable sheath, intermittent sticking and slipping between the ripcords and the armor as the armor is formed, and/or inadequate ripcord pay-off tension.

[0005] The movement of the ripcords out of their initial position reduces functionality of the ripcord for a number of reasons. Among these reasons, ripcords that become positioned too close to the sharp edges of armor tape used in the manufacture of the cable can be cut, or they can "escape" from their desired location from under to over the armor. Also, if the ripcords move very close to each other, only a narrow slot (if no slot at all, as the second ripcord will slide through the opening created by the first one) is cut through the jacket or sheath, thus making extraction of the cable core very difficult.

[0006] A second problem in the prior art arises when the cable becomes bent. In this situation, ripcords that do not have excess length (that is, ripcords with a length that is nearly equal to the cable length) and which are not located on a neutral axis of the cable, are subjected to forces which tend to pull the ripcord toward the neutral axis of the cable. This stress of the ripcord may squeeze the cable core and damage, for example, the buffer tubes or optical fibers underneath, possibly causing attenuation increase or mechanical damage to the fiber coating. This is more particularly likely to happen in cable structures that have a tight fit between the core and the sheath/jacket, thus limiting the possibilities for the ripcord to move around the core to reach the cable neutral bending plane. The present invention overcomes these problems.

BRIEF SUMMARY OF THE INVENTION

[0007] It is an object of the present invention to provide a cable assembly in which the ripcords are attached to the tape by, for example, bonding or weaving the ripcords to the tape, thus preventing movement of the ripcords from their initial position.

[0008] It is another object of the invention to provide a cable assembly having at least one ripcord with excess length disposed in the cable, which allows bending of the cable assembly with reduced ripcord tension.

[0009] Accordingly, the present invention provides a cable assembly comprising a cable core, a tape surrounding the cable core, at least one ripcord attached to the tape, and a cable jacket surrounding the tape. In addition to the cable jacket, the present invention can include a cable sheath disposed between the tape and the cable jacket for providing further protection to the cable core. As an example, a jacket referred to in this context can be a simple extruded plastic layer, while a sheath can represent a more complex protection (e.g., a sheath with additional reinforcement, such as an armor, a tape, or mechanical reinforcement). More particularly, the present invention comprises a cable assembly wherein the ripcord is attached to the tape by bonding or weaving the ripcord to the tape, thus providing for more secure placement of the ripcord and providing additional strength to the tape.

[0010] In a second embodiment of the present invention, a cable assembly comprises a cable core having a predetermined axial length, a cable jacket for housing the cable core along the predetermined axial length of the cable core, and a ripcord disposed between the cable core and the cable jacket along the predetermined axial length, in a manner that the ripcord is contained within the predetermined axial length, but the ripcord has a length substantially longer that the predetermined axial length. In a preferred embodiment of the present invention, the ripcord is disposed along the predetermined axial length in a wavy shape, for example sinusoidal, thus the ripcord is made "flexible", alleviating damage to the cable assembly that can occur from ripcord tension created by bending. When the cable returns from its bent position to a straight position, the ripcords can move back to their original path or locally buckle to accommodate a different path as they usually have a flexural stiffness that is low enough to easily allow this.

BRIEF DESCRIPTION OF THE DRAWINGS

[0011] **FIG. 1** is a diagram illustrating a section of tape with two ripcords positioned and bonded to the tape.

[0012] **FIG. 2***a* is a diagram illustrating a cross-section of a cable assembly using the tape of **FIG. 1** wherein ripcords are attached to the inside and outside of the tape.

[0013] **FIG. 2***b* is a diagram illustrating a cross-section of a cable assembly using the tape of **FIG. 1** wherein ripcords are attached to the inside of the tape.

[0014] **FIG. 3** is a diagram illustrating a ripcord with excess length having the ripcord in a wavy shape.

[0015] **FIG. 4** is a diagram depicting a cross-section of a cable assembly using a ripcord with excess length and "soft" buffer tubes.

DETAILED DESCRIPTION OF THE PREFERRED EMBODIMENT

[0016] The present invention allows for the ripcord location to be tightly controlled, which allows a jacket or sheath of a cable assembly to be bisected, and therefore, easy extraction of the cable core. **FIG. 1** depicts a section of tape in which two ripcords are attached to the tape. More specifically, in **FIG. 1**, ripcord **10** and ripcord **11** are bonded to the tape **20** using an adhesive, chemical adhesion method, or a melting technique. The tape **20** used in a cable assembly can be of several types such as, for example, steel, paper, water swellable, heat-barrier, etc., these tapes being coated or not. In another embodiment of the present invention, ripcords **10** and **11** can be woven, instead of bonded, to tape **20**. Weaving of the ripcord to the tape could take place during the manufacture of the tape, or by employing separate weaving processes tailored to the type of tape that is used.

[0017] By having the ripcords bonded or woven to the tape, the ripcords **10** and **11** are prevented from moving from their initial position. Therefore, the removal of a protective jacket or sheath is facilitated, and direct access to the cable cores can be obtained. One additional benefit of having the ripcords **10** and **11** bonded or woven to the tape **20** is that the ripcords **10** and **11** also carry a part of the tensile load of the tape, accordingly, providing a strength feature to the tape.

[0018] For a cable assembly using a laminated tape, e.g., a water-swellable tape, the tape contains at least two tape layers with for example, water swellable powder used in between the layers of the tape. When this type of tape is used, the ripcords **10** and **11** can be placed between the laminated layers, additionally providing strength to the tape **20**.

[0019] **FIGS. 2***a* and **2***b* illustrate a cross-section of a cable assembly of a preferred embodiment of the present invention, and depict how the tape **20** from **FIG. 1** is placed and used in the cable assembly. Depending on the application, the ripcords **10** and **11** can be attached to the inside or the outside of the tape **20**, or a combination thereof. **FIG. 2***a* depicts ripcord **10** attached to the outside of tape **20**, while ripcord **11** is attached to the inside of tape **20**. Alternatively, **FIG. 2***b* illustrates a cable assembly in which both ripcords **10** and **11** are attached to the inside of tape **20**. In both **FIGS. 2***a* and **2***b*, cable jacket **30** surrounds tape **20**, providing protection to the cable core (not shown). The application of the ripcords **10** and **11** attached to the tape **20** is not particular to a cable design, but, could be used in most cable designs in which access to the cable is obtained by ripping an outer sheath or jacket **30**. Also as shown in **FIGS. 2***a* and **2***b*, ripcord **10** is aligned to be spaced apart from ripcord **11** (typically between 90 and 180 degrees), thereby allowing for bisection of the cable jacket **30**.

[0020] Another embodiment of the present invention is shown in **FIGS. 3 and 4**. In **FIGS. 3 and 4**, the ripcord **13** has excess length which allows for bending of the cable assembly with reduced or negligible ripcord tension. In this embodiment, as shown in detail in **FIG. 4**, the ripcord **13** is placed between "soft" buffer tubes **40** surrounding optical fibers **50**, and the outer sheath **70**. The excess length should be large enough to absorb strains caused on the ripcord by cable bending. In a preferred embodiment shown in **FIG. 3**, the ripcord **13** is placed with low tension to run interior to the outer sheath **70** in a wavy shape (nearly sinusoidal in **FIG. 3**). This wavy shape can be generated by a guiding die inserting the ripcord **13**, where the guiding die is moved back and forth perpendicular to the cable assembly axis. An improvement of this technique could consist of bonding or gluing the ripcord on the tape following this wavy pattern so that the influence of the ripcord pay-off tension is minimized. An alternative solution to introduce overlength is to apply the ripcord with a low tension and stretch the core so that excess length is generated through relaxation of the core to generate the desired excess length due to the core relaxation. Using a ripcord with excess length enables a cable assembly to be bent without concern for damage to the cable core resulting from ripcord tension. Therefore, cable reliability can be improved during cable deployment and application, which promotes the use of ripcords in cable designs having soft cores of buffer tubes **40**, e.g., FlexTube. In addition, in a further embodiment as shown in **FIG. 4**, the ripcord **13** can be attached to a core wrapping **60**, which can be the tape as described above. Also, additional ripcords could be used, with the ripcords bonded or woven to the tape.

[0021] While the present invention has been described with what presently is considered to be the preferred embodiments, the claims are not to be limited to the disclosed embodiments. Variations can be made thereto without departing from the spirit and scope of the invention.

What is claimed is:

1. A cable assembly comprising:

a cable core;

a tape surrounding said cable core;

at least one ripcord attached to said tape; and

a cable jacket surrounding said tape.

2. A cable assembly according to claim 1, wherein a cable sheath is disposed between said tape and said cable jacket.

3. A cable assembly according to claim 1, wherein said ripcord is attached to said tape in a wavy shape.

4. A cable assembly according to claim 1, wherein said ripcord is attached to said tape by bonding said ripcord to said tape.

5. A cable assembly according to claim 1, wherein said ripcord is attached to said tape by weaving said ripcord into a tape structure of said tape.

6. A cable assembly according to claim 3, wherein said ripcord is attached to said tape by bonding said ripcord to said tape.

7. A cable assembly according to claim 3, wherein said ripcord is attached to said tape by weaving said ripcord into a tape structure of said tape.

8. A cable assembly according to claim 1, wherein said cable core includes optical fibers enclosed by soft buffer tubes.

9. A cable assembly comprising:

a cable core;

a tape surrounding said cable core, wherein at least two tape layers are laminated to form said tape;

at least one ripcord disposed between said at least two tape layers; and

a cable jacket surrounding said tape.

10. A cable assembly according to claim 1, wherein a cable sheath is disposed between said tape and said cable jacket.

11. A cable assembly according to claim 9, wherein a water swellable powder is disposed between said at least two tape layers.

12. A cable assembly comprising:

a cable core having a predetermined axial length;

a cable jacket for housing said cable core along said predetermined axial length of said cable core;

a ripcord disposed between said cable core and said cable jacket along said predetermined axial length, in a manner that said ripcord is contained within said predetermined axial length, but said ripcord having a length substantially longer that said predetermined axial length.

13. A cable assembly according to claim 12, wherein said ripcord is disposed along said predetermined axial length in a wavy shape.

14. A cable assembly according to claim 12, further comprising a tape disposed between said cable core and said cable jacket.

15. A cable assembly according to claim 14, wherein said ripcord is bonded to said tape.

16. A cable assembly according to claim 14, wherein said ripcord is woven into said tape.

17. A cable assembly according to claim 14, wherein at least two tape layers are laminated to form said tape, said ripcord being disposed between said at least two tape layers.

18. A cable assembly according to claim 17, wherein a water swellable powder is disposed between said at least two tape layers.

19. A cable assembly according to claim 12, wherein said cable core includes optical fibers enclosed by soft buffer tubes.

* * * * *