US 20130015719A1

(19) United States

(12) Patent Application Publication

(10) Pub. No.: US 2013/0015719 A1

(43) Pub. Date: Jan. 17, 2013

Jung et al.

(54) **CORE ASSEMBLY FOR WIRELESS POWER TRANSMITTING DEVICE AND WIRELESS POWER TRANSMITTING DEVICE HAVING THE SAME**

(76) Inventors: **Chun-Kil Jung**, Seoul (KR); **Yoon-Sang Kuk**, Gwacheon-si (KR)

(21) Appl. No.: **13/550,201**

(22) Filed: **Jul. 16, 2012**

(30) **Foreign Application Priority Data**

Jul. 14, 2011 (KR) 10-2011-0070145

Publication Classification

(51) **Int. Cl.**

H01F 27/28 (2006.01)

H01F 27/24 (2006.01)

H01F 27/30 (2006.01)

H02J 17/00 (2006.01)

(52) **U.S. Cl.** **307/104**; 336/220; 336/199

(57) **ABSTRACT**

A core assembly used for a wireless power transmitting device and a wireless power transmitting device having the same. The core assembly for the wireless power transmitting device includes: a main coil disposed at a first level; an auxiliary coil disposed at a lower side of the main coil such that the auxiliary coil is located at a second level lower than the first level, and including a first sub coil and a second sub coil, which respectively have a portion overlapped with the main coil and respectively have a size smaller than the main coil; and a core of a magnetic substance configured to accommodate the main coil and the auxiliary coil.

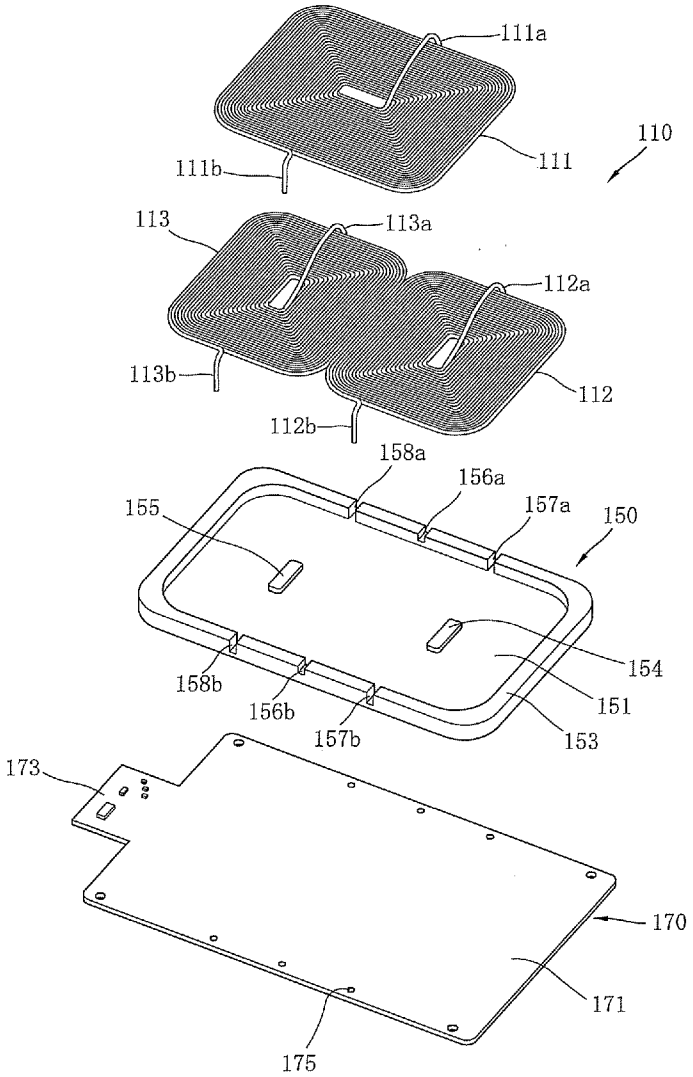

BMW EXHIBIT 1007

FIG. 1

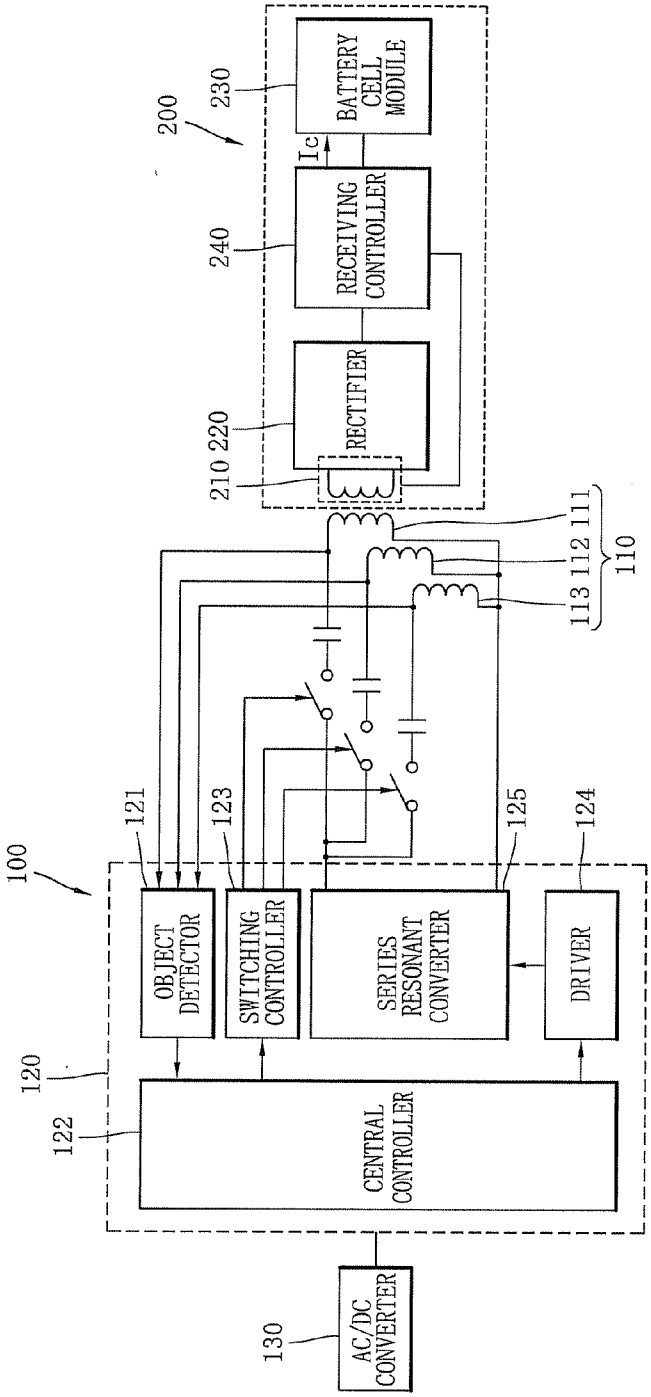
100
120
122
CENTRAL CONTROLLER
121
OBJECT DETECTOR
123
SWITCHING CONTROLLER
SERIES RESONANT CONVERTER
125
124
DRIVER
130
AC/DC CONVERTER
110
113 112 111
210 220
RECTIFIER
240
RECEIVING CONTROLLER
Ic
200
230
BATTERY CELL MODULE

FIG. 2

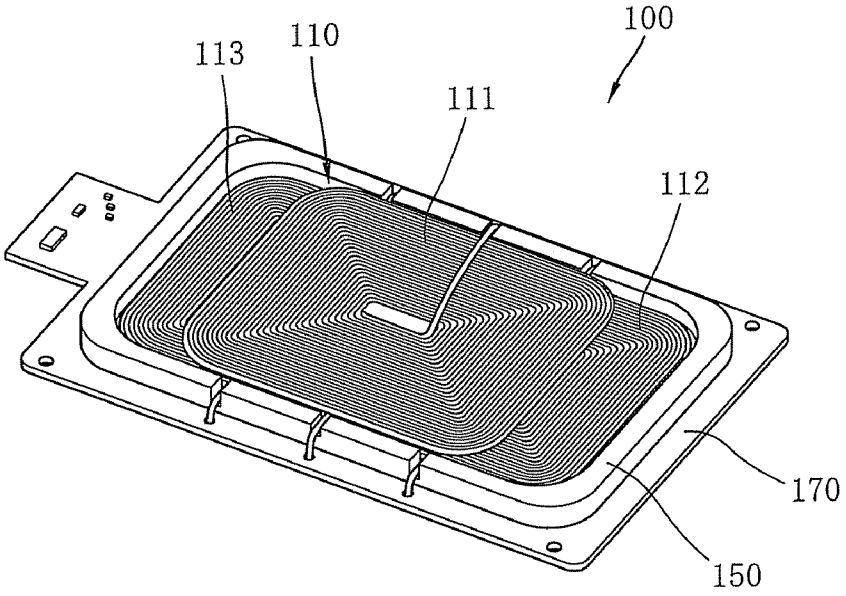

FIG. 3

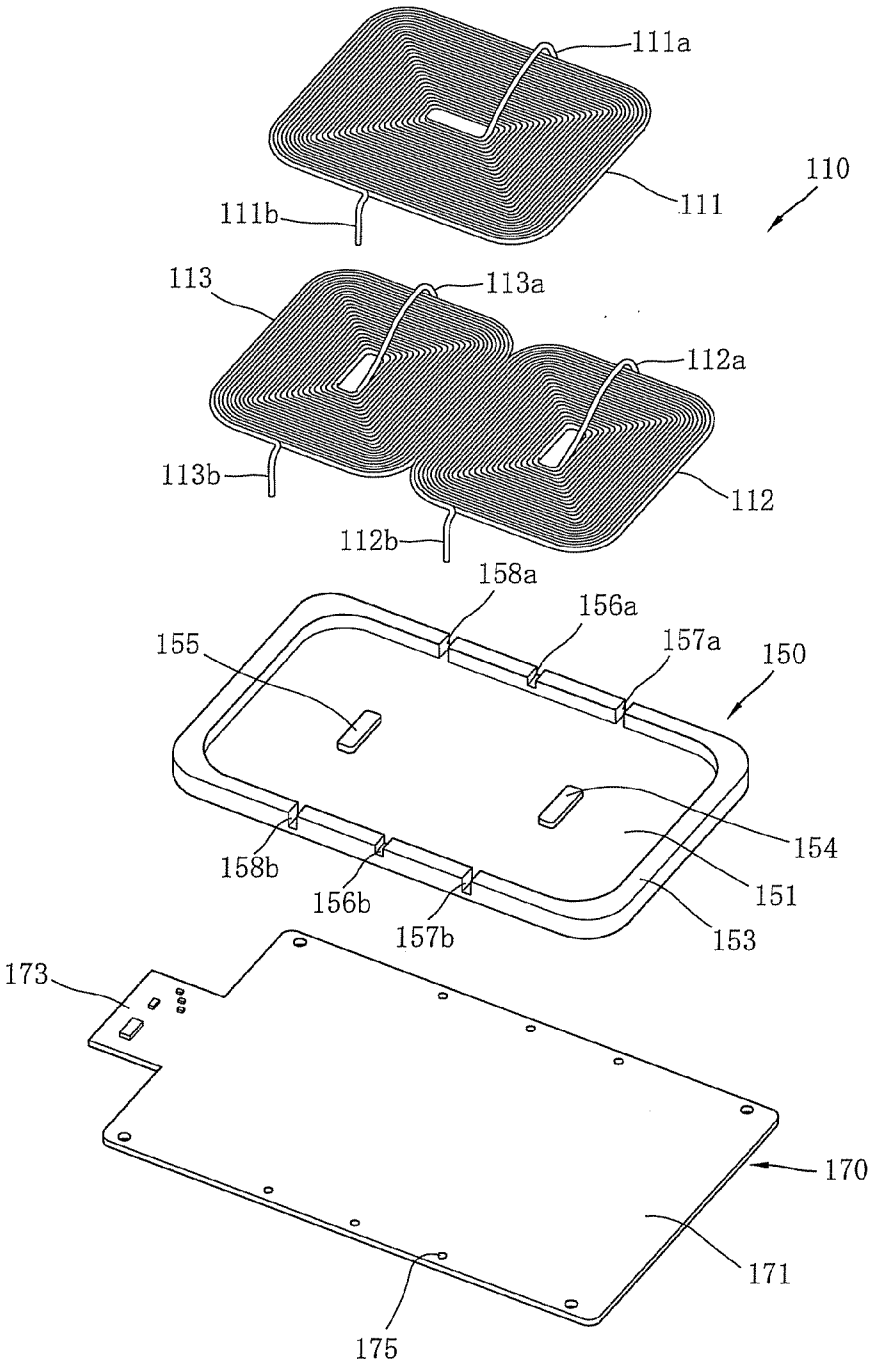
111a
110
111
111b
113
113a
112a
113b
112
112b
158a
156a
155
157a
150
154
158b
151
156b
157b
153
173
170
171
175

FIG. 4

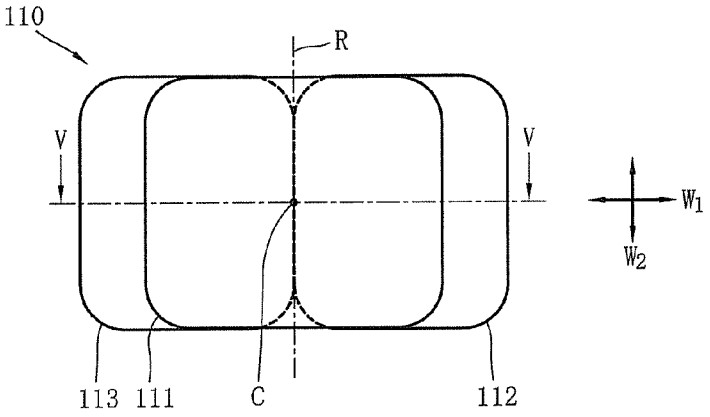
110
R
V
V
W1
W2
113
111
C
112

FIG. 5

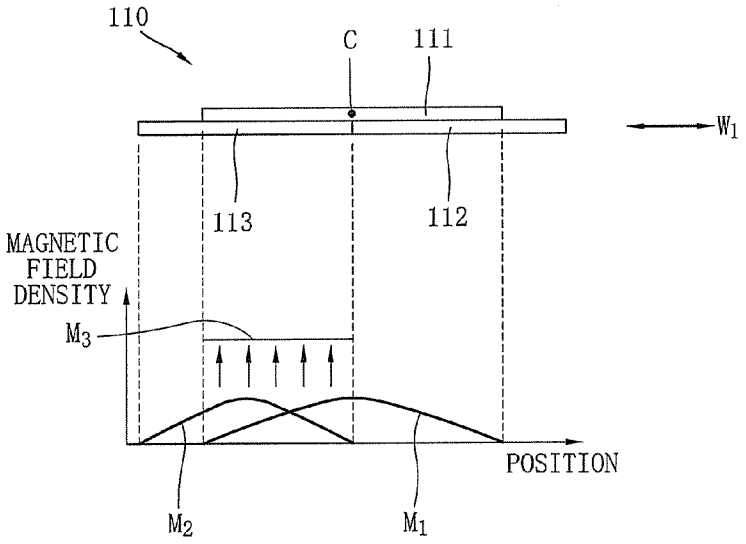
110
C
111
W1
113
112
MAGNETIC
FIELD
DENSITY
M3
POSITION
M2
M1

FIG. 6

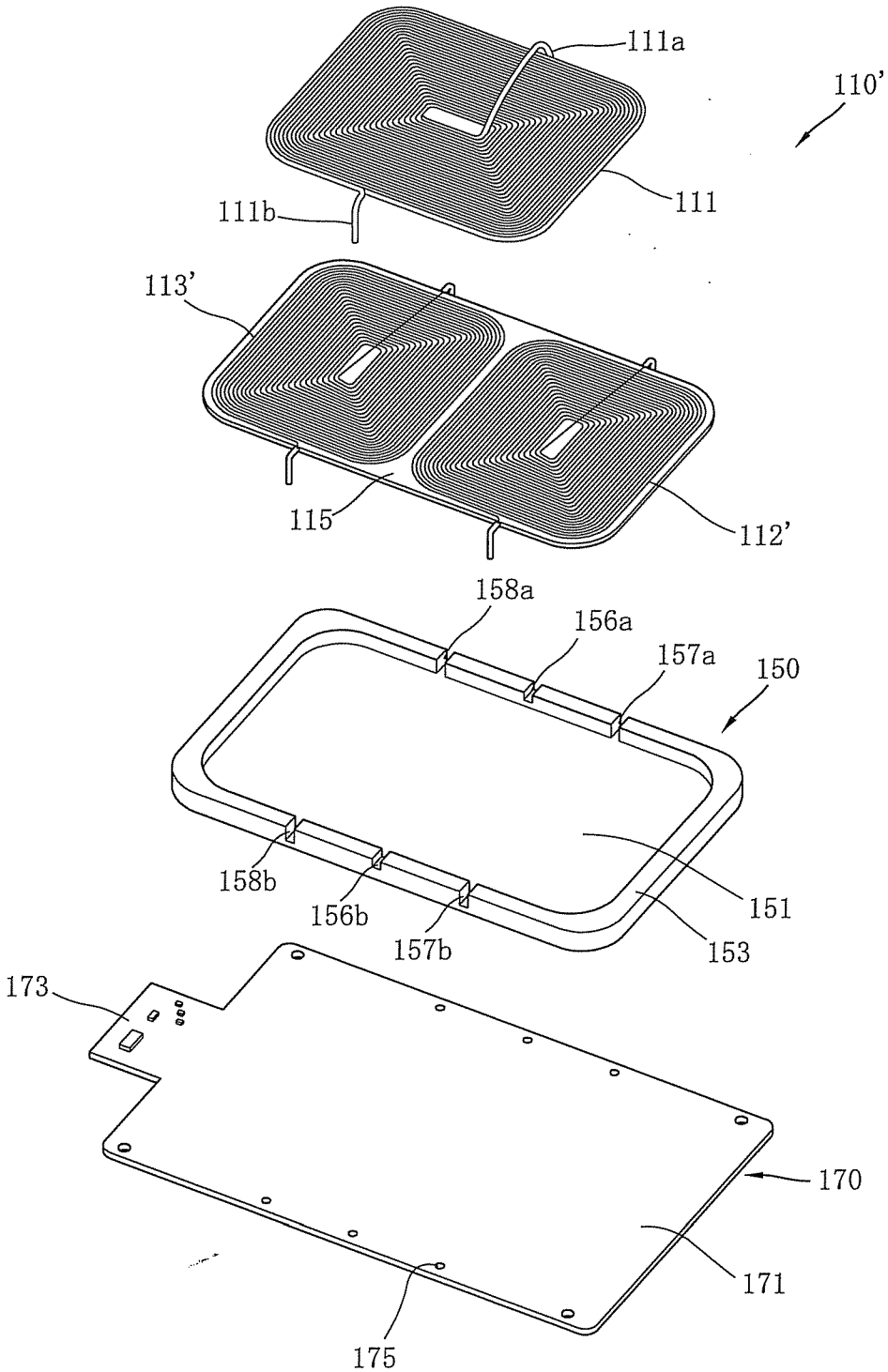
111a
110'
111
111b
113'
115
112'
158a
156a
157a
150
158b
156b
157b
151
153
173
170
171
175

CORE ASSEMBLY FOR WIRELESS POWER TRANSMITTING DEVICE AND WIRELESS POWER TRANSMITTING DEVICE HAVING THE SAME

CROSS-REFERENCE TO RELATED APPLICATION

[0001] This application claims the benefit of Korean Patent Application No. 10-2011-0070145, filed on Jul. 14, 2011, in the Korean Intellectual Property Office, the disclosure of which is incorporated herein by reference.

BACKGROUND OF THE INVENTION

[0002] 1. Field of the Invention

[0003] The following description relates to a core assembly used for a wireless power transmitting device and a wireless power transmitting device having the same.

[0004] 2. Description of the Related Art

[0005] Generally, a rechargeable secondary battery is mounted on portable electronic devices such as a mobile communication terminal and Personal Digital Assistants (PDA). An individual charging device for supplying electric energy to a battery of a portable electronic device using commercial home power sources is required for charging the battery.

[0006] As an alternative to the contact charging method, a wireless power communication system for transmitting power wirelessly to charge a battery without contact between each contact terminal of the charging device and the battery is suggested.

[0007] In the wireless power communication system, since there is no coupling between terminals, it is required to dispose a wireless power receiving device on a wireless power transmitting device at a correct position in order to maintain a predetermined charging efficiency. However, the above-mentioned requirement may not be satisfied due to user's acts or a vibration of the wireless power receiving device during charging.

SUMMARY OF THE INVENTION

[0008] While not limited thereto, an embodiment of the invention is directed to providing a core assembly for a wireless power transmitting device that minimizes deterioration of a power transmitting efficiency by providing a constituent element for increasing a freedom degree of a correct position in which the wireless power receiving device for receiving power from the wireless power transmitting device is to be disposed, and a wireless power transmitting device having the same.

[0009] According to an aspect of the invention, provided is a core assembly for a wireless power transmitting device, including: a main coil disposed at a first level; an auxiliary coil disposed at a lower side of the main coil such that the auxiliary coil is located at a second level lower than the first level, and including a first sub coil and a second sub coil, which respectively have a portion overlapped with the main coil and respectively have a size smaller than the main coil; and a core of a magnetic substance configured to accommodate the main coil and the auxiliary coil.

[0010] According to an aspect of the invention, the first sub coil and the second sub coil may be disposed to contact a lower surface of the main coil.

[0011] According to an aspect of the invention, a width of the main coil in a first direction may be longer than each width of the first sub coil and the second sub coil in the first direction.

[0012] According to an aspect of the invention, the main coil may be disposed to cover a portion of each upper surface of the first sub coil and the second sub coil and to expose a rest area excluding the covered portion.

[0013] According to an aspect of the invention, the width of the main coil in the first direction may be shorter than a sum of the widths of the first sub coil and the second sub coil in the first direction.

[0014] According to an aspect of the invention, the width of the main coil in the first direction may be 60 to 80% of the sum of the widths of the first sub coil and the second sub coil in the first direction.

[0015] According to an aspect of the invention, the width of the main toil in a second direction may be the same as each width of the first sub coil and the second sub coil in a second direction.

[0016] According to an aspect of the invention, the width of the first sub coil in the first direction may be configured to be the same as that of the second sub coil in the first direction.

[0017] According to an aspect of the invention, a line that neighboring surfaces of the first sub coil and the second sub coil meet may correspond to a line passing a center of the main coil.

[0018] According to an aspect of the invention, the second direction may be perpendicular to the first direction.

[0019] According to an aspect of the invention, the auxiliary coil may include: a base as an insulator disposed at the lower side of the main coil; and a conductive pattern disposed at a surface facing the main coil of the base to include a first conductive pattern forming the first sub coil and a second conductive pattern forming the second sub coil.

[0020] According to an aspect of the invention, a concave portion accommodating the main coil and the auxiliary coil and a side wall defining the concave portion may be formed at one surface of the core.

[0021] According to an aspect of the invention, a plurality of extension grooves, at which a passage that an end portion of the main coil and the auxiliary coil extends out of the concave portion is formed, may be configured at the side wall.

[0022] According to another aspect of the invention, provided is a wireless power transmitting device, including: a core assembly described above; and a transmitting controller for controlling transmission of a wireless power signal via the main coil and the auxiliary coil.

[0023] According to an aspect of the invention, the transmitting controller may control such that power is simultaneously applied to any one of the first sub coil and the second sub coil along with the main coil.

[0024] Additional aspects and/or advantages of the invention will be set forth in part in the description which follows and, in part, will be obvious from the description, or may be learned by practice of the invention.

BRIEF DESCRIPTION OF THE DRAWINGS

[0025] These and/or other aspects and advantages of the invention will become apparent and more readily appreciated from the following description of the embodiments, taken in conjunction with the accompanying drawings of which:

[0026] FIG. **1** is a block diagram that shows a wireless power communication system in accordance with an exemplary embodiment.

[0027] FIG. **2** is an assembled perspective view showing main elements of the wireless power transmitting device **100** in FIG. **1**.

[0028] FIG. **3** is a disassembled perspective view showing the wireless power transmitting device **100** in FIG. **2**.

[0029] FIG. **4** is a conceptual plane view showing a primary coil **110** of FIG. **2**.

[0030] FIG. **5** is a conceptual view including a cross-section taken along a line V-V of FIG. **4**.

[0031] FIG. **6** is a disassembled perspective view showing a wireless power transmitting device **100'** in accordance with an exemplary embodiment that the wireless power transmitting device **100** of FIG. **3** is modified.

DETAILED DESCRIPTION OF THE EMBODIMENTS

[0032] Reference will now be made in detail to the present embodiments of the present invention, examples of which are illustrated in the accompanying drawings, wherein like reference numerals refer to the like elements throughout. The embodiments are described below in order to explain the present invention by referring to the figures.

[0033] Hereinafter, a core assembly for a wireless power transmitting device and a wireless power transmitting device having the same will be described in detail with reference to the accompanying drawings. In all embodiments of this specification, the same or similar constituent elements have the same or similar reference number and the same description on the same or similar constituent elements in different exemplary embodiments will be identically applied.

[0034] FIG. **1** is a block diagram that shows a wireless power communication system in accordance with an exemplary embodiment. As shown in FIG. **1**, the wireless power communication system in accordance with an exemplary embodiment includes a wireless power transmitting device **100** and a wireless power receiving device **200**. According to an electromagnetic induction method, when the wireless power transmitting device **100** transmits a wireless power signal to the wireless power receiving device **200**, the wireless power receiving device **200** receiving the wireless power signal charges a battery with the power of the wireless power signal or supplies power to electronic devices connected to the wireless power receiving device **200**.

[0035] Hereinafter, each of configurations of the wireless power transmitting device **100** and the wireless power receiving device **200** will be described.

[0036] The wireless power transmitting device **100** according to an exemplary embodiment includes a primary coil **110**, a transmitting controller **120** and an alternating current/direct current (AC/DC) converter **130**. The primary coil **110** is a device for transmitting a power signal to a secondary coil **210** of the wireless power receiving device **200** according to the electromagnetic induction method. According to this exemplary embodiment, three coils including a main coil **111**, a first sub coil **112** and a second sub coil **113** may be adopted as the primary coil **110**. The three coils **111**, **112**, and **113** may be selectively operated by control of a transmitting controller **120**.

[0037] With reference to FIG. **1** again, the transmitting controller **120** for controlling the primary coil **110** may include an object detector **121**, a central controller **122**, a switching controller **123**, a driver **124** and a series resonant converter **125**.

[0038] The object detector **121** detects a load change of the primary coil **110**, determines whether an object detected by the corresponding load change is the wireless power receiving apparatus **200**—i.e., functions as an identification (ID) checker—and filters and processes a charging state signal transmitted from the wireless power receiving apparatus **200**. For example, when an ID signal as a response signal to an ID call signal transmitted via the primary coil **110** is received, the object detecting unit **121** filters and processes the ID signal. When a charging state signal including information on a battery cell or a charging voltage is received, the object detecting unit **121** filters and processes the received information.

[0039] The central controller **122** receives and checks a determination result of the object detector **121**, analyzes an ID signal received via the primary coil **110**, and transmits a power signal for transmitting a wireless power signal via the primary coil **110** to the driver **124**. Also, when the charging state signal is received via the primary coil to be described below, the central controller **122** changes the wireless power signal by controlling the driver **124** based on the charging state signal.

[0040] The switching controller **123** controls a switching operation of a switch among the coils **111** to **113** and the series resonant converter **125**.

[0041] The driver **124** controls the operation of the series resonant converter **125** by controlling the central controller **122**.

[0042] The series resonant converter **125** generates transmission power for generating a power signal to be transmitted by controlling the driver **124** and supplies the transmission power to one end of the primary coil **110**. In other words, when the central controller **122** transmits the power controlling signal for transmitting a power signal with a required power value to the driver **124**, the driver **124** controls the operation of the series resonant converter **125** correspondingly to the transmitted power controlling signal. Also, the series resonant converter **125** applies transmission power corresponding to the required power value to the primary coil **110** by controlling the driver **124** to transmit a wireless power signal with a required strength.

[0043] In addition, the series resonant converter **125** supplies power for generating first to third object detecting signals via each of the main coil **111** and the first and second sub coils **112** and **113** by controlling of the driver **124**.

[0044] The AC/DC converter **130** is a device for converting an AC power of 220V or 110V into a DC power of a predetermined voltage. As described above, an output voltage value is changed by control of the central controller **122**.

[0045] The wireless power receiving apparatus **200** receiving power by receiving a power signal includes a secondary coil **210**, a rectifier **220**, a battery cell module **230** and a receiving controller **240**. The secondary coil **210** generates induction power by the transmitted power signal. The rectifier **220** rectifies induced power. The battery cell module **230** is charged with the rectified power. The receiving controller **240** controls the secondary coil **210**, the rectifier **220** and the battery cell module **230**.

[0046] The secondary coil **210** is configured to receive a wireless power signal transmitted from the primary coil **110** of the wireless power transmitting device **100**.

[0047] The rectifier **220** rectifies a wireless power received from the secondary coil **210** into a DC voltage, and maintains a charging state with a charging voltage before start of the charging.

[0048] The battery cell module **230** is an object to be charged by the DC power from the rectifier **220** according to the control of the receiving controller **240**. Electronic appliances such as PMP, MP3, and cellular phones may be charged instead of the battery cell module **230**. Meanwhile, the battery cell module **230** is configured to include protection circuits such as an over voltage and over current preventing circuit and a temperature sensing circuit. Also, a charging management module for collecting and processing the information including the charging state of the battery cell is included.

[0049] The receiving controller **240** controls the current of the power charged in the rectifier **220** such that a proper current flows into the battery cell module **230**.

[0050] Hereinafter, the wireless power transmitting device **100** and a core assembly as a part of the wireless power transmitting device **100** will be described in detail with reference to FIG. **2** to FIG. **6**.

[0051] FIG. **2** is an assembled perspective view showing main elements of the wireless power transmitting device **100** in FIG. **1**.

[0052] With reference to FIG. **2**, the wireless power transmitting device **100** may include a primary coil **110**, a core **150**, and a circuit board **170**. Among them, the primary coil **110** and the core **150** are included in the core assembly.

[0053] As described above, the primary coil **110** is formed of three coils including the main coil **111** and the auxiliary coils (the first sub coil **112** and the second sub coil **113**). Each of the coils **111** to **113** is wound in one direction to have an oval shape, a track shape or a quadrangular shape. Although the first sub coil **112** and the second sub coil **113** have the quadrangular shape, the main coil **111** may have the track shape. In this case, the main coil **111** of the track shape increases a freedom degree at a position of the wireless power receiving device **200**. The coils **111** to **113** may be formed of a Litz type according to a method that a plurality of wires are twisted. Each of the coils **111** to **113** has two end portions (see FIG. **3**).

[0054] In an arrangement of the coils **111** to **113**, the auxiliary coils of the first sub coil **112** and the second sub coil **113** are disposed at a lower side, and the main coil **111** is disposed at an upper side of the first sub coil **112** and the second sub coil **113**. Accordingly, if the main coil **111** is disposed at a first level, the first sub coil **112** and the second sub coil **113** may be disposed at a second level, which is different from and lower than the first level. Accordingly, the main coil **111** is disposed to be closer to a charging surface, in which the wireless power receiving device **200** is disposed, among outer surfaces of the wireless power transmitting device **100** than the auxiliary coil. In this arrangement, each of the first sub coil **112** and the second sub coil **113** is partially overlapped with the main coil **111**, and the overlapped portions of the coils **112** and **113** is not to be exposed to the outside. Also, since the auxiliary coils **112** and **113** are disposed to contact the lower surface of the main coil **111**, a gap between the wireless power receiving device **200** and the auxiliary coils **112** and **113** is minimized.

[0055] The core **150** having a material of a magnetic substance accommodates the primary coil **110**. The core **150** may be formed of a plate shape. In this exemplary embodiment, the core **150** generally has a rectangular shape. To be specific, four corners of the rectangular shape have a round-treated shape.

[0056] The circuit board **170** is disposed at a lower side of the core **150** to face a lower surface of the core **150**. Since an area of the circuit board **170** is wider than that of the core **150**, a part **171** of the circuit board **170** (see FIG. **3**) supports the core **150** from below. Another part **173** of the circuit board **170** (see FIG. **3**) includes a circuit for controlling the power that is applied to the primary coil **110**. The control circuit may include the transmitting controller **120** and the AC/DC converter **130** (see FIG. **1**) described above. Further, at least one shield layer and insulating layer may be included in the circuit board **170** and the core **150**. The shield layer and the insulating layer reduce a possibility that the magnetic field generated in the primary coil **110** affects the circuit board **170**.

[0057] A detailed configuration of the primary coil **110** and the core **150** will be described with reference to FIG. **3**. FIG. **3** is a disassembled perspective view showing the wireless power transmitting device **100** in FIG. **2**.

[0058] With reference to FIG. **3**, the primary coil **110** includes the main coil **111** and the auxiliary coils including the sub coils **112** and **113**, whose area is respectively different from the main coil **111**, as described above. In this exemplary embodiment, the main coil **111** has a wider area than each of the first sub coil **112** and the second sub coil **113**, and is disposed at an upper side than the sub coils **112** and **113**.

[0059] The main coil **111** includes two end portions **111***a* and **111***b*, and the first sub coil **112** includes two end portions **112***a* and **112***b*. The second sub coil **113** also includes two end portions **113***a* and **113***b*.

[0060] A concave portion **151** for accommodating the primary coil **110** is formed at a main surface of the core **150**. The concave portion **151** is defined by a side wall **153** protruded to surround the concave portion **151**. A plurality of extension grooves **156***a*, **156***b*, **157***a*, **157***b*, **158***a* and **158***b* for communicating the concave portion **151** with an outside is formed at the side wall **153**. Each of both end portions of the coils **111** to **113** extends to an outside of the concave portion **151** via the extension grooves **156***a*, **156***b*, **157***a*, **157***b*, **158***a* and **158***b* to be connected to the circuit board **170**. The core **150** is formed of a magnetic substance. The core **150** shields a magnetic field, which is out of a direction toward the wireless power receiving device **200** (see FIG. **1**), among the magnetic fields by a current flowing in the coil **110** accommodated in the concave portion **151**.

[0061] The concave portion **151** is recessed to have a closed curve shape, i.e., a rectangular or oval shape outline. The concave portion **151** has a size for tightly accommodating an outer peripheral that holds the first sub coil **112** and the second sub coil **113** (and the main coil **111**) disposed in parallel form together. Accordingly, since the first sub coil **112** and the second sub coil **113** are accommodated in the concave portion **151**, the first sub coil **112** and the second sub coil **113** maintain a predetermined location inside the core **150**.

[0062] The side wall **153** has a height corresponding to a depth that the concave portion **151** is recessed. The side wall **153** has a size corresponding to a thickness of the primary coil **110** to shield or lessen that the magnetic field generated in the coil **110** is leaked in a direction toward the side wall **153**.

[0063] As described above, an inner surface of the side wall **153** contacts an outer peripheral of the tightly accommodated primary coil **110** such that the coil **110** is disposed at a regular (predetermined) position.

[0064] Supports **154** and **155** are formed to be protruded at a bottom of the concave portion **151**. Each of the supports **154** and **155** is inserted into the hollow portion of the first sub coil **112** or is formed to be inserted into the hollow portion of the second sub coil **113**. Accordingly, the supports **154** and **155** do not deviate from the position that the first sub coil **112** or the second sub coil **113** are set up, to thereby maintain the predetermined arrangement.

[0065] Shapes of the supports **154** and **155** are formed to correspond to the shapes of inner peripherals of the hollow portions of the coils **112** and **113**. In this exemplary embodiment, the outer peripheral of the supports **154** and **155** has a curved section corresponding to the inner peripheral surface of the hollow portions having a curve shape. Differently from the first sub coil **112** and the second sub coil **113**, a position of the main coil **111** may be determined according to a method that the main coil **111** is attached to the first sub coil **112** and the second sub coil **113** by using a double-sided tape.

[0066] Also, the plurality of extension grooves **156***a*, **156***b*, **157***a*, **157***b*, **158***a* and **158***b* for connecting the concave portion **151** to the outside is formed at the side wall **153**. A first pair of extension grooves **156***a* and **156***b* are formed at a position corresponding to both end portions **111***a* and **111***b* of the main coil **111**. A second pair of extension grooves **157***a* and **157***b* are formed at a position corresponding to both end portions **112***a* and **112***b* of the first sub coil **112**. A third pair of extension grooves **158***a* and **158***b* are formed at a position corresponding to both end portions **113***a* and **113***b* of the second sub coil **113**.

[0067] An upper surface **171** of the circuit board **170** is disposed to face a lower surface of the core **150**. Through-holes **175** corresponding to the extension grooves **156***a*, **156***b*, **157***a*, **157***b*, **158***a* and **158***b* are formed along a long side of the circuit board **170**. End portions of a primary core **110** passing through the through-holes **175** are connected to a circuit pattern of the circuit board **170** at a lower surface of the circuit board **170**.

[0068] A relation of the main coil **111** and the first and second sub coils **112** and **113** will be described with reference to FIG. **4** and FIG. **5**.

[0069] FIG. **4** is a conceptual plane view showing the primary coil **110** of FIG. **2**. FIG. **5** is a conceptual view including a cross-section taken along a line V-V of FIG. **4**.

[0070] Referring to FIG. **4** and FIG. **5**, the main coil **111** has a width, which is longer than each width of the first sub coil **112** and the second sub coil **113** along the first direction W_1. However, the main coil **111** has the width, which is smaller than a sum of each width of the first sub coil **112** and the second sub coil **113** along the first direction W_1. Accordingly, a portion, which is out of the main coil **111** in each of the first sub coil **112** and the second sub coil **113**, is exposed to the outside. The width of the main coil **111** in the direction W_1 may be 60-80% of the sum of the widths of the first sub coil **112** and the second sub coil **113**. If the width of the main coil **111** is less than 50% of the sum of the widths of the first sub coil **112** and the second sub coil **113**, it means that the width of the main coil **111** is smaller than that of any one of the first sub coil **112** and the second sub coil **113**. Further, if the width of the main coil **111** is 100% of the sum of the widths of the first sub coil **112** and the second sub coil **113**, it means that at least any one portion of the first sub coil **112** and the second sub coil **113** in the direction W_1 is not exposed to the outside. In the above two extreme cases, the present inventors recognized that the above ratio is proper when the main coil **111** mainly transmits a power signal to the wireless power receiving device **200** and the first sub coil **112** and the second sub coil **113** assist the main coil **111**.

[0071] For example, if the width of the first sub coil **112** and the second sub coil **113** in the first direction W_1 is 50 mm, the width of the main coil **111** in the same direction may be 70 mm. In this case, a region corresponding to 35 mm in width of the first sub coil **112** and the second sub coil **113** in the first direction W_1 may be covered with the main coil **111**, and a region corresponding to 15 mm in width of the first sub coil **112** and the second sub coil **113** in the first direction W_1 may be exposed to the outside. Differently from the above case, the coils **111** to **113** in a second direction W_2 may have the same width of 60 mm.

[0072] Differently from the difference of the widths in the first direction W_1, the width of the main coil **111** in the second direction W_2 may be the same as that of the first sub coil **112** and the second sub coil **113**. Further, the first sub coil **112** and the second sub coil **113** may have the same size. Herein, the first direction W_1 is generally perpendicular to the second direction W_2 and each of the coils **111** to **113** generally has a quadrangular shape.

[0073] In addition, side surfaces facing the first sub coil **112** and the second sub coil **113** may meet at a line R, which passes a center C of the main coil **111**.

[0074] According to the above configuration, since the main coil **111** is disposed at a center of the entire primary coil **110** to have the largest size, the main coil **111** may be set up as a basic (default) coil for transmitting a wireless power signal. When the user locates the wireless power receiving device **200** at a neighborhood of a center of a surface for charging of the wireless power transmitting device **100**, it is charged by the main coil **111**. When the wireless power receiving device **200** is out of the center of the charging surface, the first sub coil **112** or the second sub coil **113** operates to charge the wireless power receiving device **200**.

[0075] Since both of the first sub coil **112** and the second sub coil **113** are disposed at a level, which is just below the main coil **111**, both of the first sub coil **112** and the second sub coil **113** do not become more distant from the wireless power receiving device **200**. Accordingly, it is possible to reduce that the power signal transmitting efficiency of the wireless power receiving device **200** is deteriorated by the coil, which is remarkably spaced apart from the wireless power receiving device **200**.

[0076] With reference to FIG. **5**, while the main coil **111** operates, at least one of the first sub coil **112** and the second sub coil **113** is operated by control of the transmitting controller **120** (see FIG. **1**). Since magnetic fields generated in the cooperating coils reinforce each other, the wireless power receiving device **200** of FIG. **1** may receive a wireless power signal by a regular magnetic flux.

[0077] To be specific, FIG. **5** shows a case that the second sub coil **113** cooperates with the main coil **111**. A magnetic field density M1 by the main coil **111** decreases from the center C of the main coil **111** to an end portion. A magnetic field density M2 by the second sub coil **113** also shows the similar aspect to the main coil **111**. However, since the magnetic field by the main coil **111** and the magnetic field by the second sub coil **113** reinforce each other, a magnetic field

density M3 of a higher level is satisfied in a portion related to the second sub coil **113** in the main coil **111**.

[0078] In the wireless power transmitting device **100**, since a current divided into halves is applied to each of the main coil **111** and the second sub coil **113**, a power loss as well as a thermal stress of the main coil **111** and the second sub coil **113** are reduced.

[0079] Another configuration of the wireless power transmitting device **100** will be described with reference to FIG. **6**. FIG. **6** is a disassembled perspective view showing a wireless power transmitting device **100'** in accordance with an exemplary embodiment that the wireless power transmitting device **100** of FIG. **3** is modified.

[0080] With reference to FIG. **6**, the wireless power transmitting device **100'** in accordance with the modified exemplary embodiment is generally similar to the wireless power transmitting device **100** in accordance with the former exemplary embodiment. However, there is a difference that the first sub coil **112** and the second sub coil **113** in accordance with the former exemplary embodiment are formed in a different shape.

[0081] To be specific, a base **115** of an insulator is further included at a lower side of the main coil **111**. Each of the first sub coil **112** and the second sub coil **113** in accordance with the former exemplary embodiment is formed of a first conductive pattern **112'** and a second conductive pattern **113'** formed on the base **115**. In the first conductive pattern **112'** and the second conductive pattern **113'**, a metal band extends in a spiral to form a plate shape. A conductive pattern indicates the whole of the first conductive pattern **112'** and the second conductive pattern **113'**.

[0082] The first conductive pattern **112'** and the second conductive pattern **113'** may be formed at a time via an etching process after attaching a metal plate such as a copper plate to the base **115**. Since the first conductive pattern **112'** and the second conductive pattern **113'** form an auxiliary coil as one member by using the base **115** as a medium, a process for assembling the primary coil **110** may be simplified. Also, the core **150** does not need the supports **154** and **155** of FIG. **3**.

[0083] Further, since the first conductive pattern **112'** and the second conductive pattern **113'** may be formed to be thinner than the first sub coil **112** and the second sub coil **113**, a distance from a center of the first conductive pattern **112'** and the second conductive pattern **113'** in a thickness direction to the wireless power receiving device **200** is closer than that of the first sub coil **112** and the second sub coil **113** in accordance with the former exemplary embodiment. Accordingly, there is an advantage that a transmitting efficiency of the wireless power signal to the wireless power receiving device **200** is improved.

[0084] According to the core assembly for the wireless power transmitting device in accordance with the exemplary embodiment, and the wireless power transmitting device having the same, it is possible to increase a freedom degree of a correct position, in which the wireless power receiving device for receiving power from the wireless power transmitting device is to be disposed, by widening a rechargeable area via two sub coils disposed at different levels.

[0085] Also, since two sub coils are disposed at the same level, it is possible to minimize the deterioration of the power transmitting efficiency in the sub coil, which is far from the wireless power receiving device in comparison with the main coil, by minimizing the distance between two sub coils and the wireless power receiving device.

[0086] Although a few embodiments of the present invention have been shown and described, it would be appreciated by those skilled in the art that changes may be made in this embodiment without departing from the principles and spirit of the invention, the scope of which is defined in the claims and their equivalents.

What is claimed is:

1. A core assembly for a wireless power transmitting device, comprising:

a main coil disposed at a first level;

an auxiliary coil disposed at a lower side of the main coil such that the auxiliary coil is located at a second level lower than the first level, and including a first sub coil and a second sub coil, which respectively have a portion overlapped with the main coil and respectively have a size smaller than the main coil; and

a core of a magnetic substance configured to accommodate the main coil and the auxiliary coil.

2. The core assembly of claim **1**, wherein the first sub coil and the second sub coil are disposed to contact a lower surface of the main coil.

3. The core assembly of claim **2**, wherein a width of the main coil in a first direction is longer than each width of the first sub coil and the second sub coil in the first direction.

4. The core assembly of claim **3**, wherein the main coil is disposed to cover a portion of each upper surface of the first sub coil and the second sub coil and to expose a rest area excluding the covered portion.

5. The core assembly of claim **3**, wherein the width of the main coil in the first direction is shorter than a sum of the widths of the first sub coil and the second sub coil in the first direction.

6. The core assembly of claim **5**, wherein the width of the main coil in the first direction is **60** to **80**% of the sum of the widths of the first sub coil and the second sub coil in the first direction.

7. The core assembly of claim **3**, wherein a width of the main coil in a second direction is the same as each width of the first sub coil and the second sub coil in a second direction.

8. The core assembly of claim **7**, wherein the width of the first sub coil in the first direction is configured to be the same as that of the second sub coil in the first direction.

9. The core assembly of claim **8**, wherein a line that neighboring surfaces of the first sub coil and the second sub coil meet corresponds to a line passing a center of the main coil.

10. The core assembly of claim **7**, wherein the second direction is perpendicular to the first direction.

11. The core assembly of claim **1**, wherein the auxiliary coil comprises:

a base as an insulator disposed at the lower side of the main coil; and

a conductive pattern disposed at a surface facing the main coil of the base to include a first conductive pattern forming the first sub coil and a second conductive pattern forming the second sub coil.

12. The core assembly of claim **1**, wherein a concave portion accommodating the main coil and the auxiliary coil, and a side wall defining the concave portion are formed at one surface of the core.

13. The core assembly of claim **12**, wherein a plurality of extension grooves, at which a passage that an end portion of the main coil and the auxiliary coil extends out of the concave portion is formed, are configured at the side wall.

14. A wireless power transmitting device, comprising:

a core assembly according to claim **1**; and

a transmitting controller for controlling transmission of a wireless power signal via the main coil and the auxiliary coil.

15. The wireless power transmitting device of claim **14**, wherein the transmitting controller controls such that power is simultaneously applied to any one of the first sub coil and the second sub coil along with the main coil.

* * * * *