US005648892A

United States Patent [19]

Wieloch et al.

[11] Patent Number: 5,648,892

[45] Date of Patent: Jul. 15, 1997

[54] **WIRELESS CIRCUIT BOARD SYSTEM FOR A MOTOR CONTROLLER**

[75] Inventors: **Christopher J. Wieloch**, Brookfield; **Thomas E. Babinski**, Kenosha, both of Wis.; **John C. Mather**, Cedar Rapids, Iowa; **Gerard A. Woychik**, Waukesha; **Steven R. McLaughlin**, Muskego, both of Wis.

[73] Assignee: **Allen-Bradley Company, Inc.**, Milwaukee, Wis.

[21] Appl. No.: **536,224**

[22] Filed: **Sep. 29, 1995**

[51] **Int. Cl.**[6] **H05K 7/20**

[52] **U.S. Cl.** **361/788**; 361/707; 361/775; 439/65

[58] **Field of Search** 257/713, 720, 257/723, 724; 174/16.3, 252, 250, 260, 262; 439/59, 62, 65, 67, 485, 487; 361/704, 707, 712, 721, 717–719, 748, 749, 760, 761, 763, 764, 775, 784, 785, 788, 789, 792; 363/141

[56] **References Cited**

U.S. PATENT DOCUMENTS

3,760,090	9/1973	Fowler .	
4,023,078	5/1977	Olliges	361/399
4,272,141	6/1981	McKeen	339/18 R
4,630,172	12/1986	Stenerson et al. .	
4,693,530	9/1987	Stillie	439/67
4,861,272	8/1989	Clark .	
4,998,180	3/1991	McAuliffe	361/383
5,041,899	8/1991	Oku et al. .	
5,045,642	9/1991	Ohta et al. .	
5,059,557	10/1991	Cragon et al. .	
5,306,874	4/1994	Biron .	
5,315,482	5/1994	Tanaka	361/707
5,455,742	10/1995	Phoy	361/778
5,484,965	1/1996	Woychik	174/262

FOREIGN PATENT DOCUMENTS

2442-570	7/1980	France .
50-78204	6/1975	Japan .
1-248590	10/1989	Japan .

Primary Examiner—Gerald P. Tolin

Attorney, Agent, or Firm—Joseph N. Ziebert; John M. Miller; John J. Horn

[57] **ABSTRACT**

A multilayer circuit board system or laminated circuit board system for use in a motor controller includes a motherboard, at least one power substrate circuit board, and a capacitor circuit board. The power substrate module includes a mounting area provided in a recess, window or portion of the circuit board where the circuit board is only a single layer thick. The single circuit board layer at the mounting area provides a heat conductive yet highly electrically insulated mounting area for receiving a heat sink. The heat sink can be mounted on a side opposite the electrical device. The capacitor circuit board, power substrate circuit board, and mother circuit board are interconnected without the use of external connectors or wires. A flexible circuit board layer or SCM™ interconnect interface allows the circuit boards to be connected solely by printed circuit (PC) wires.

17 Claims, 14 Drawing Sheets

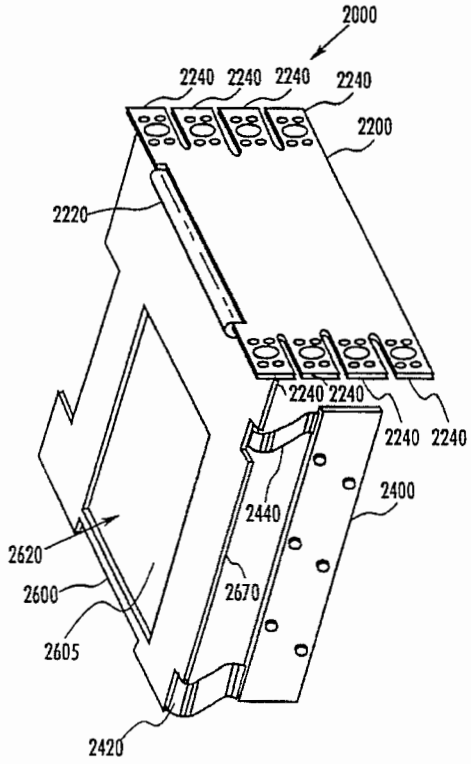

BMW EXHIBIT 1018

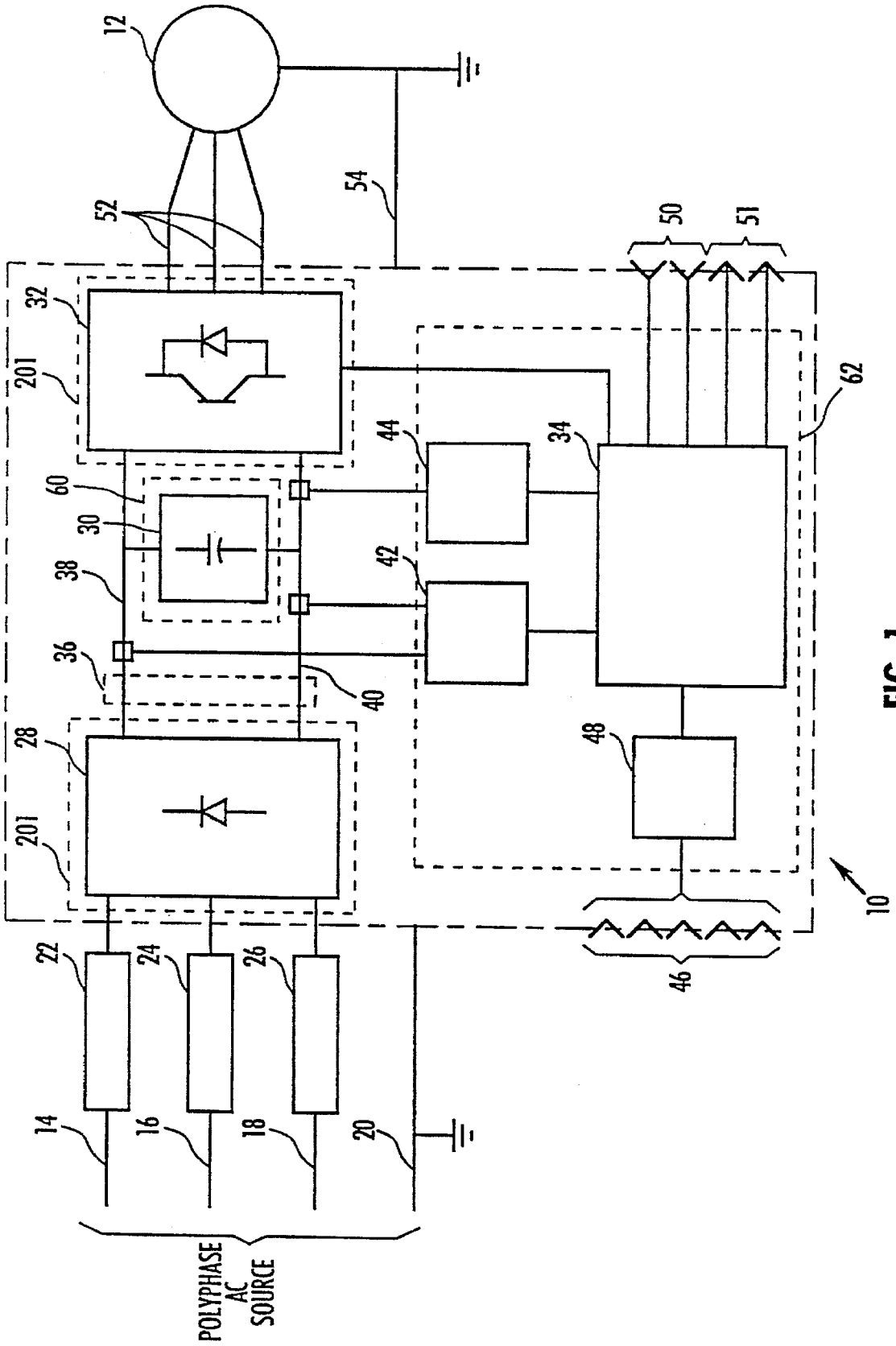
12
52
54
50
51
32
201
62
44
34
60
30
42
38
36
40
28
201
48
10
22
24
26
46
14
16
18
20
POLYPHASE AC SOURCE

FIG. 1

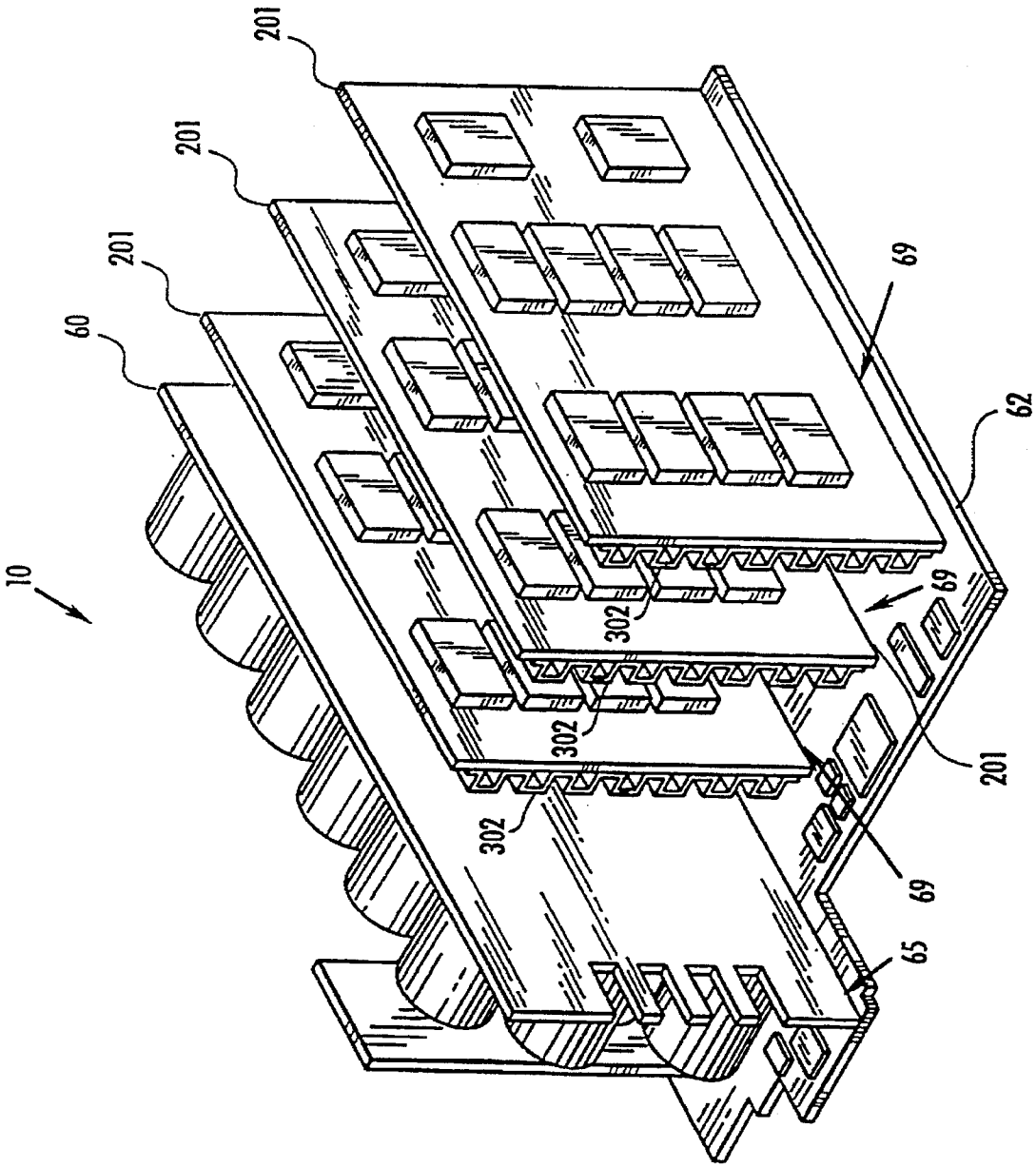

FIG. 2

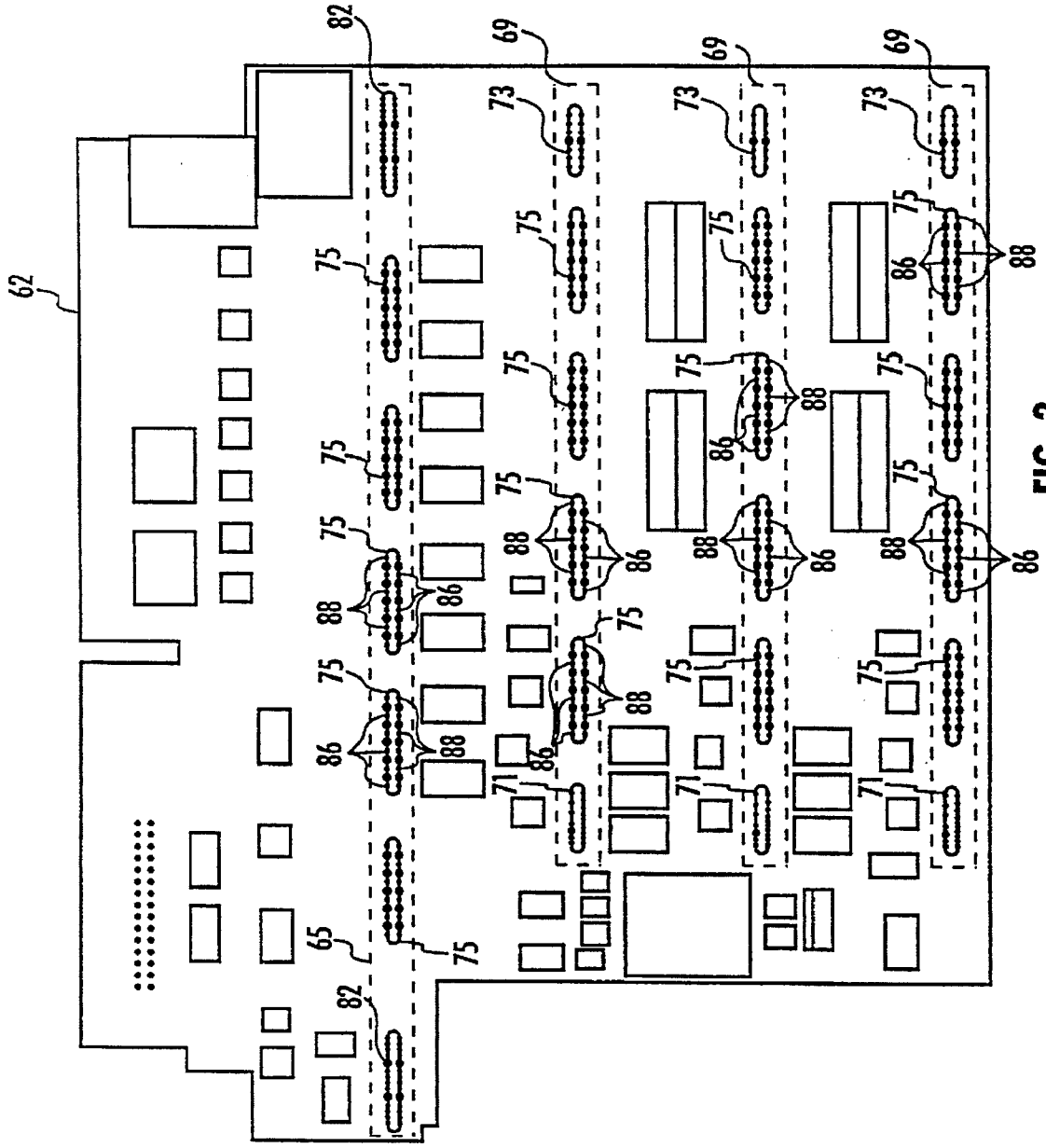

FIG. 3

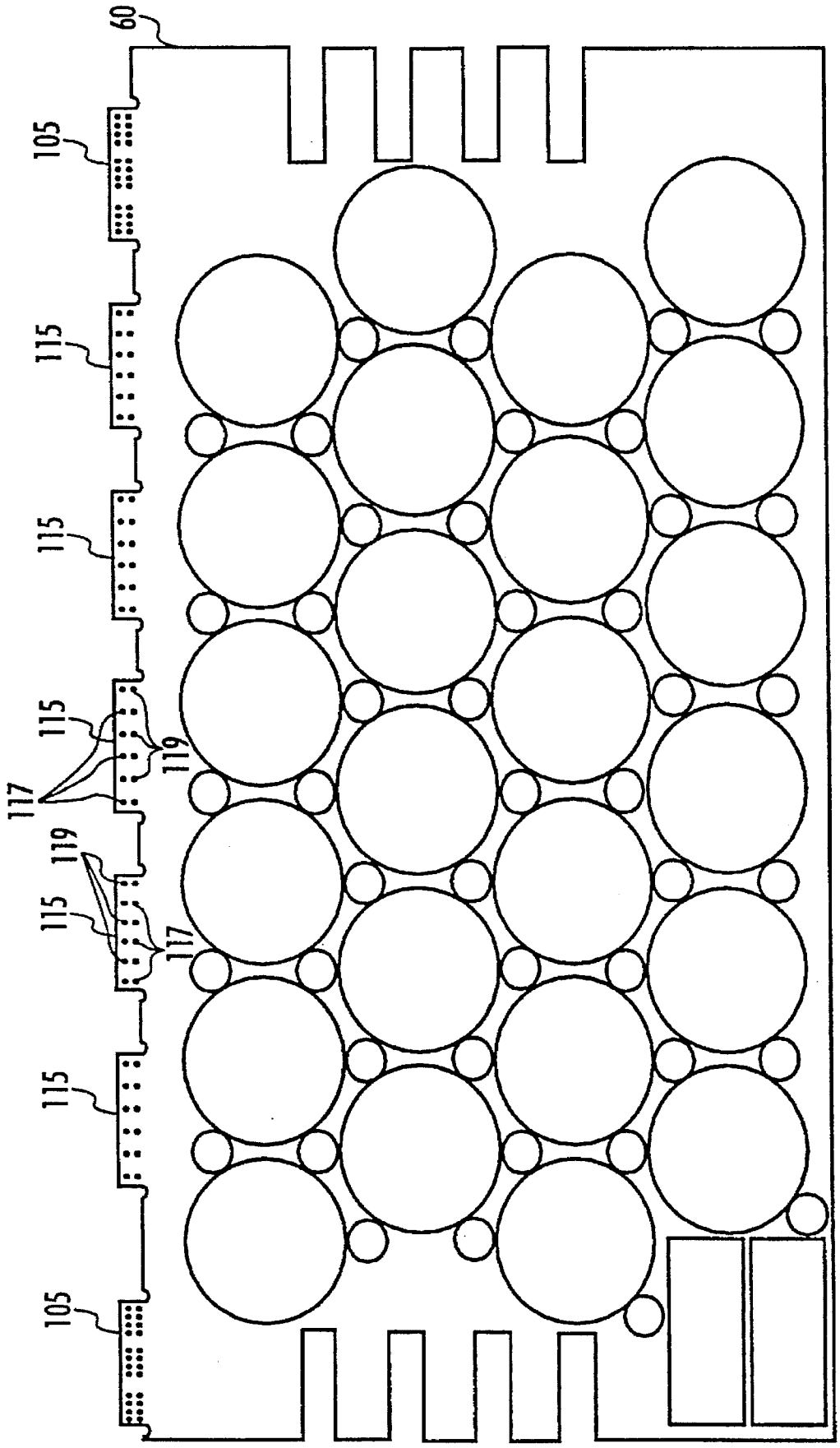

FIG. 4

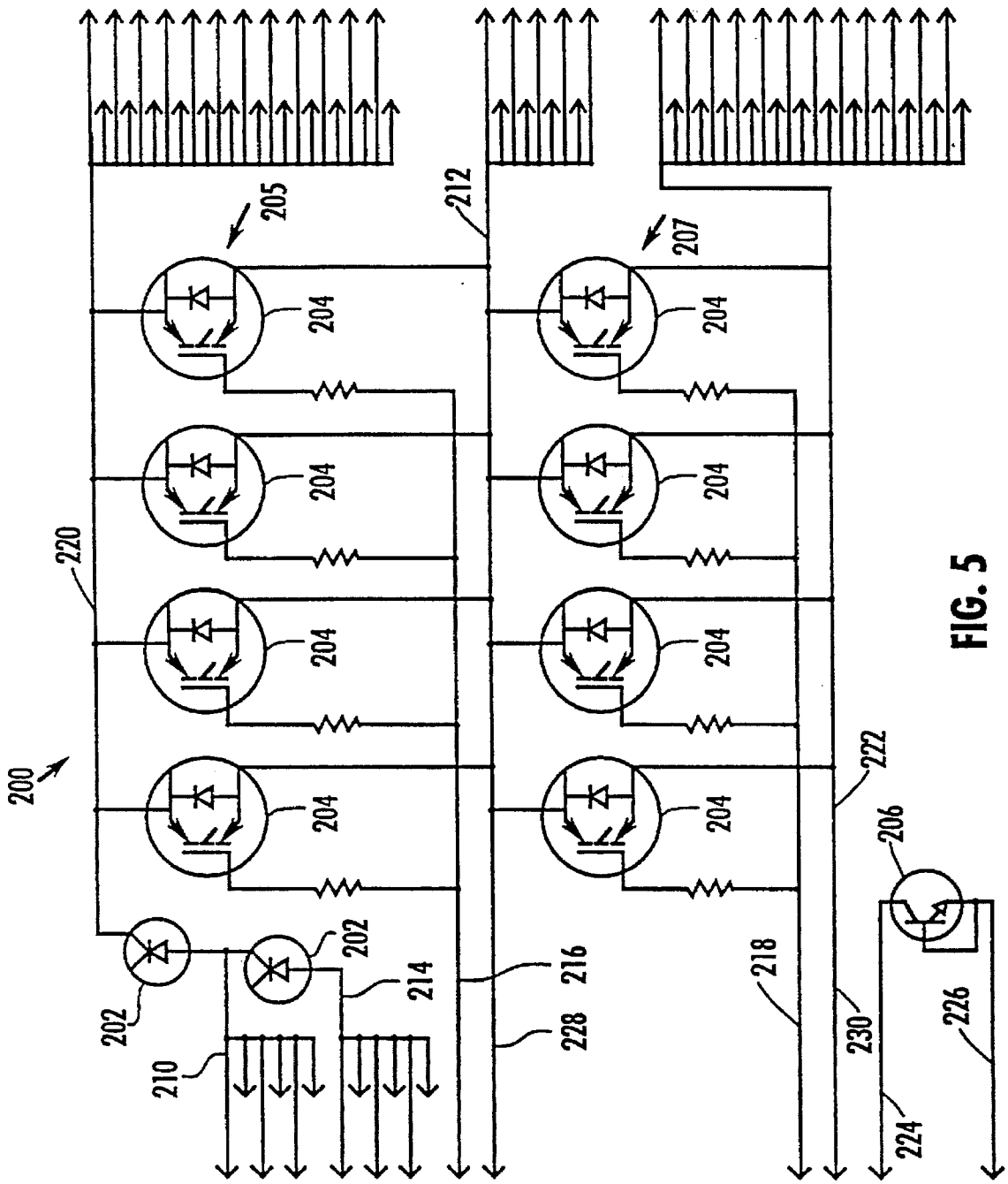
200
205
207
204
202
206
210
212
214
216
218
220
222
224
226
228
230

FIG. 5

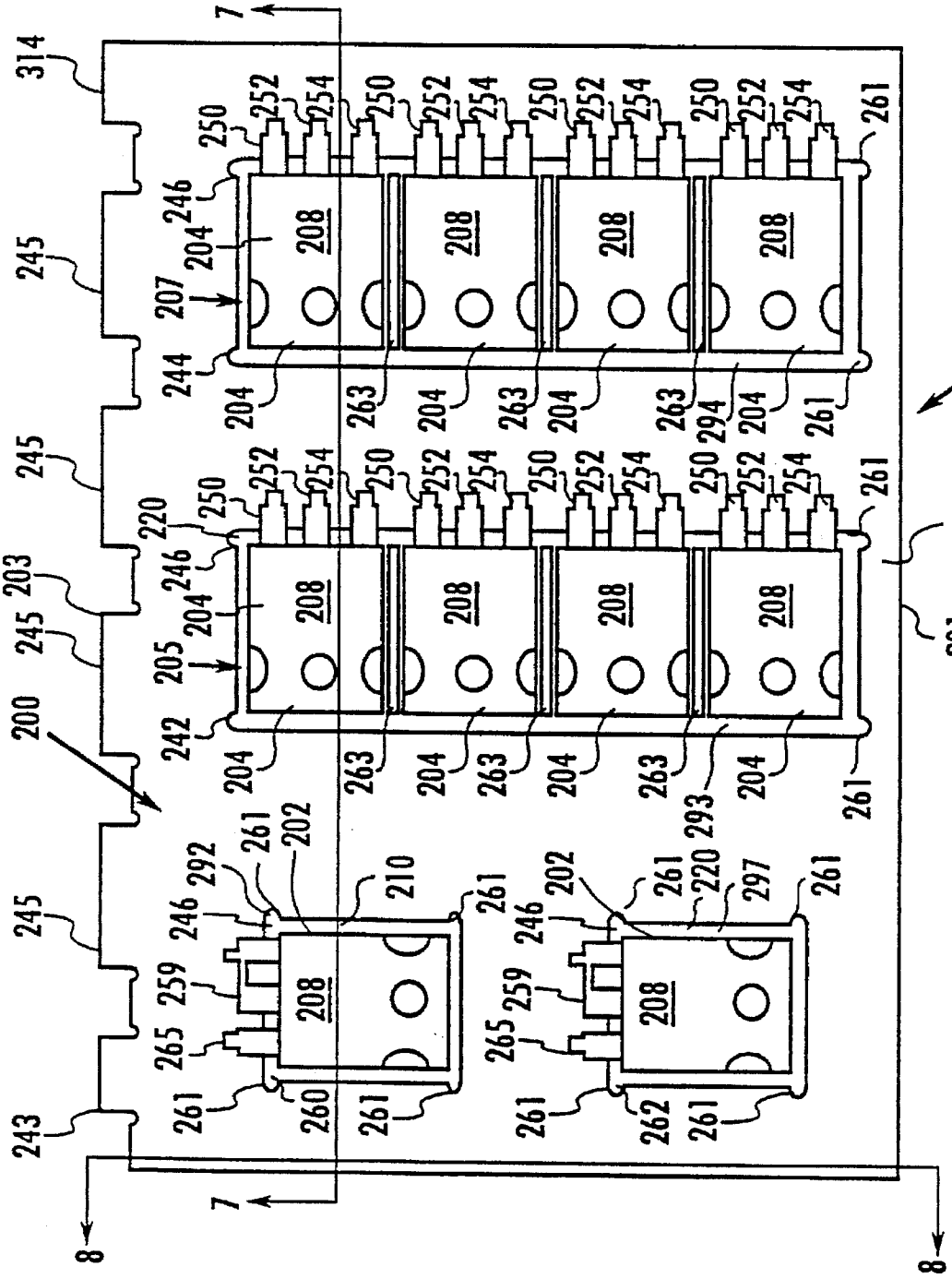
7
314
245
203
200
243
8
250
252
254
261
246
204
207
244
208
263
294
240
220
205
242
293
248
201
292
202
210
259
265
260
262
297

FIG. 6

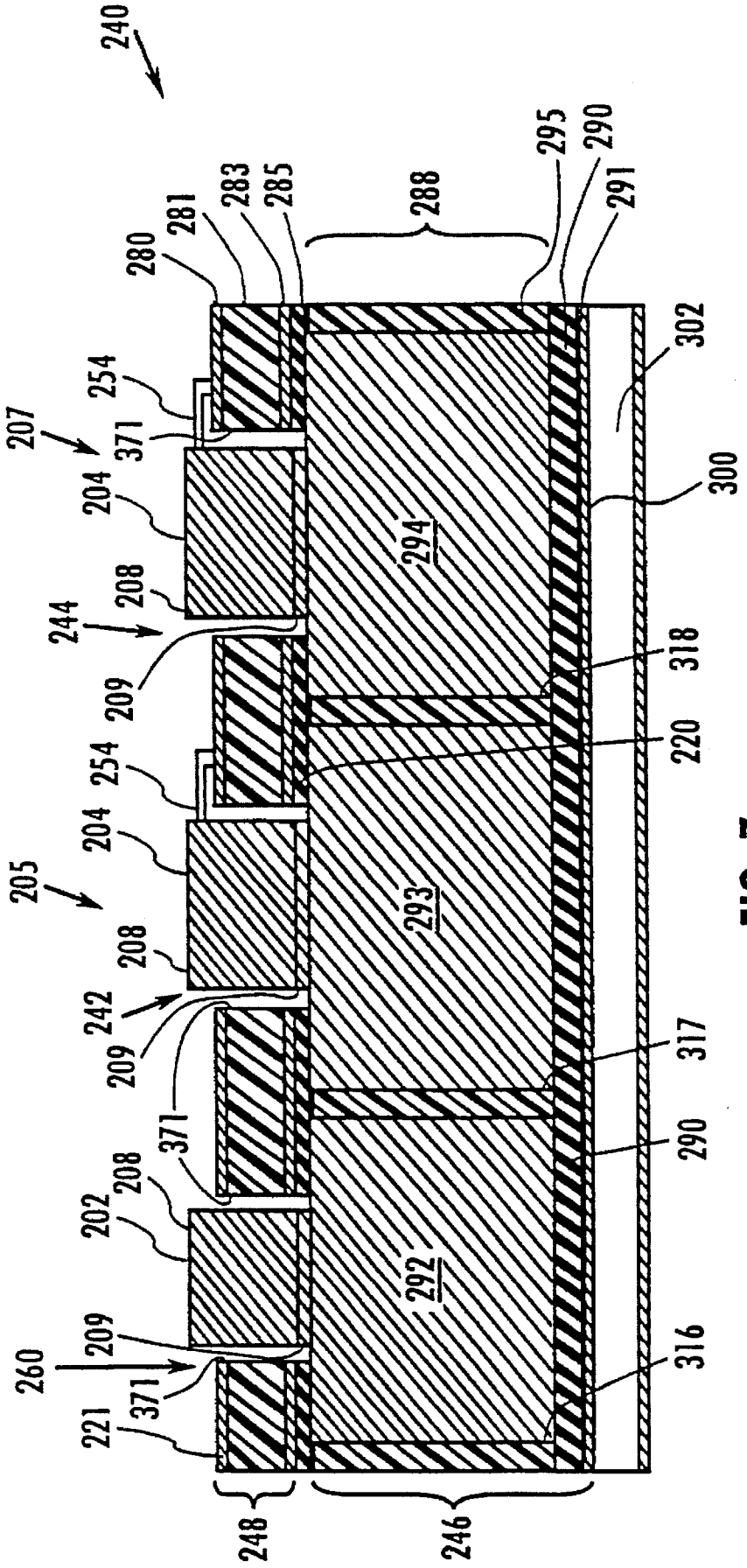
240
280
281
283
285
288
295
290
291
302
254
207
371
204
300
294
208
244
209
318
220
254
204
205
293
208
242
209
317
371
208
202
290
209
292
260
371
316
221
248
246

FIG. 7

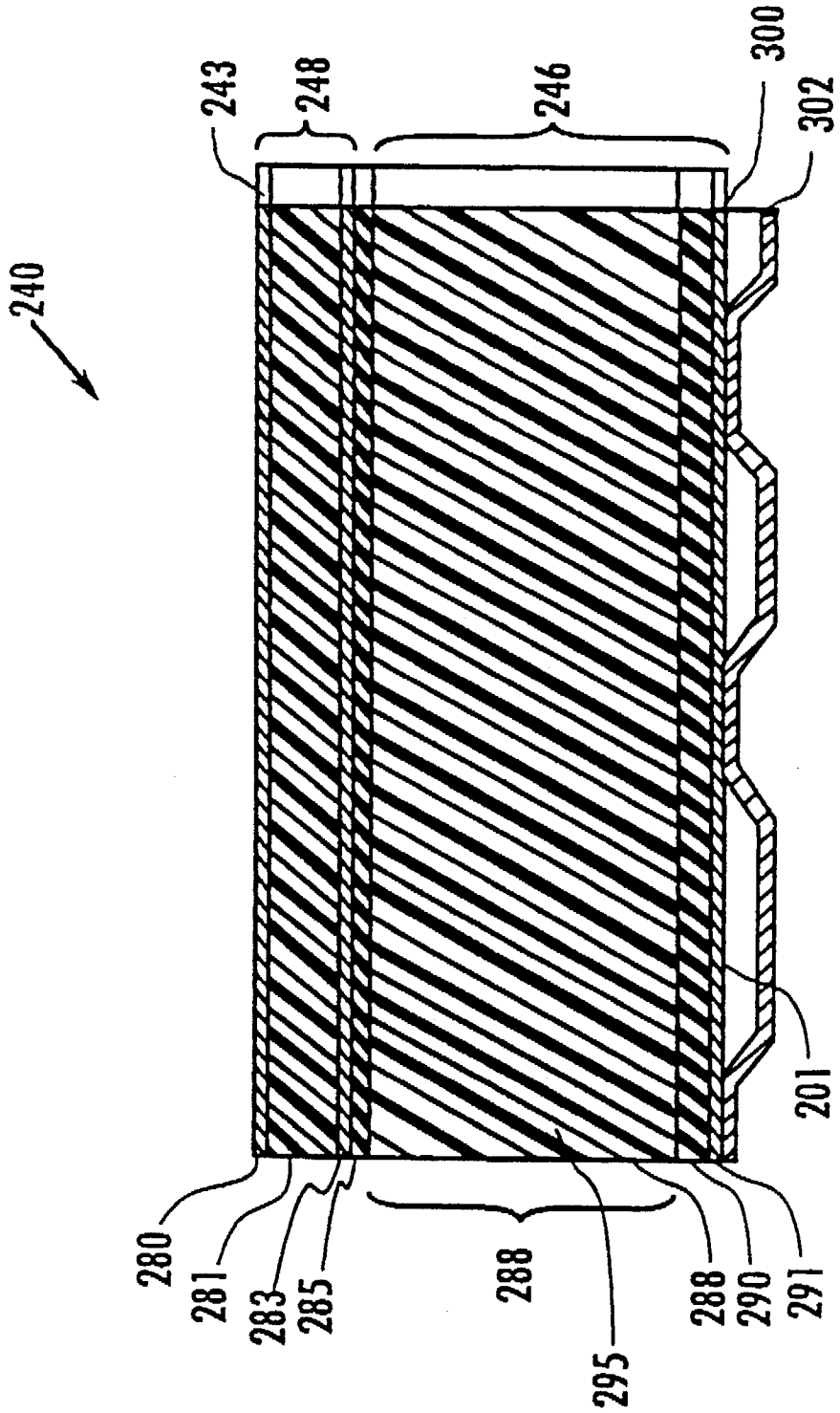

FIG. 8

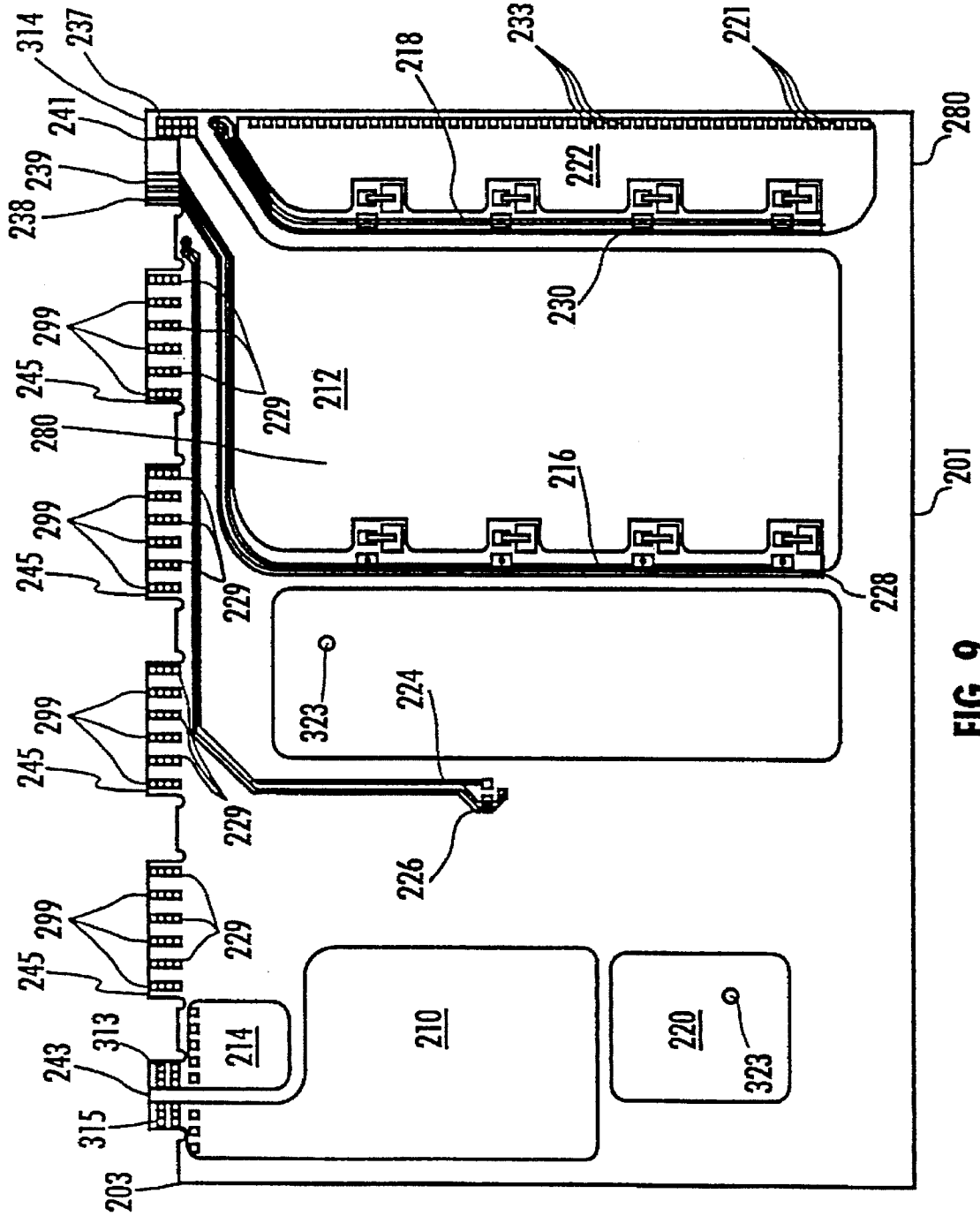
314
237
241
239
238
218
233
221
280
222
230
299
245
212
229
280
216
201
228
323
224
226
210
220
214
313
243
315
203

FIG. 9

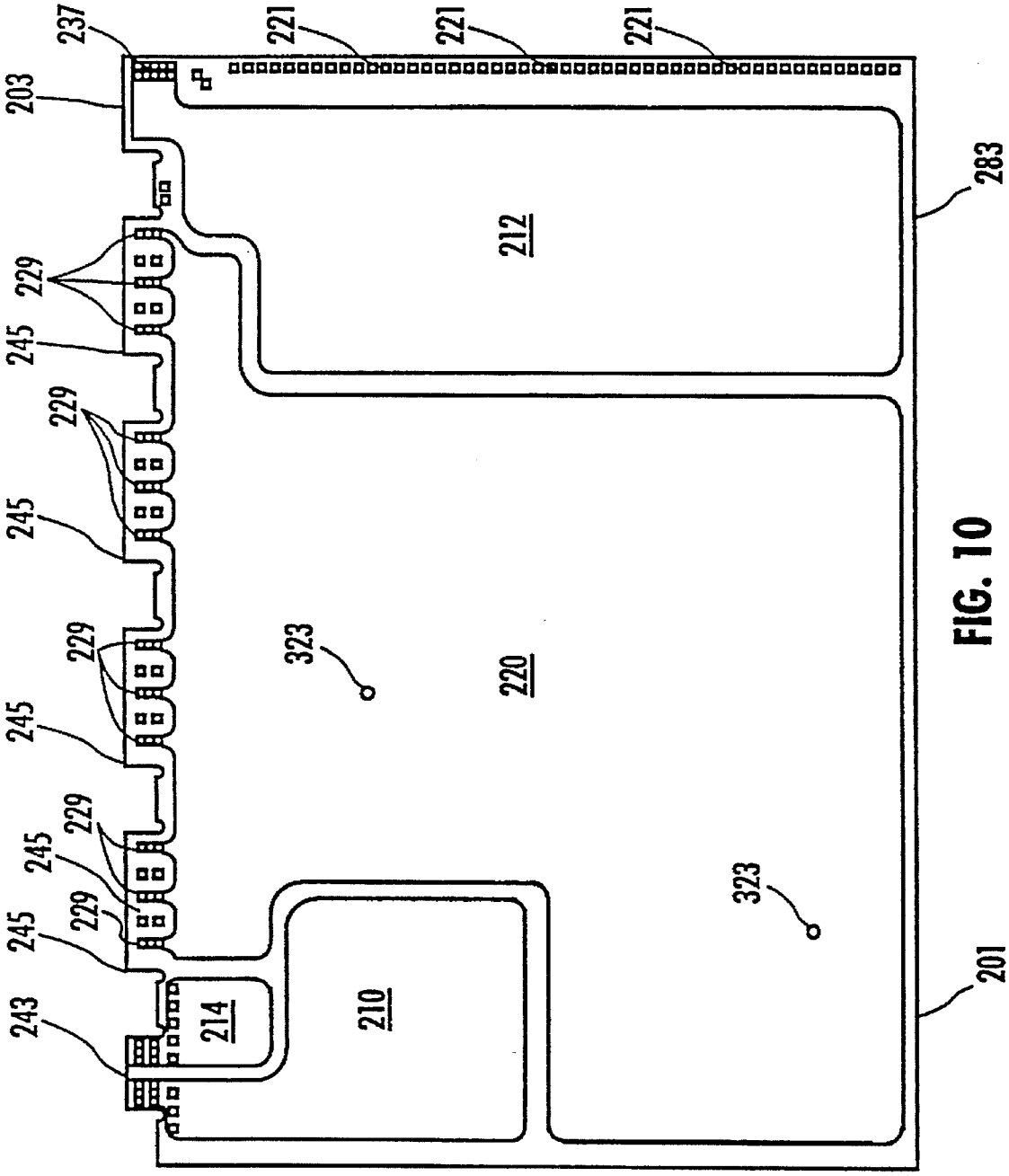
237
203
229
245
229
245
229
245
229
245
229
245
243
214
210
323
220
323
212
221
221
221
283
201

FIG. 10

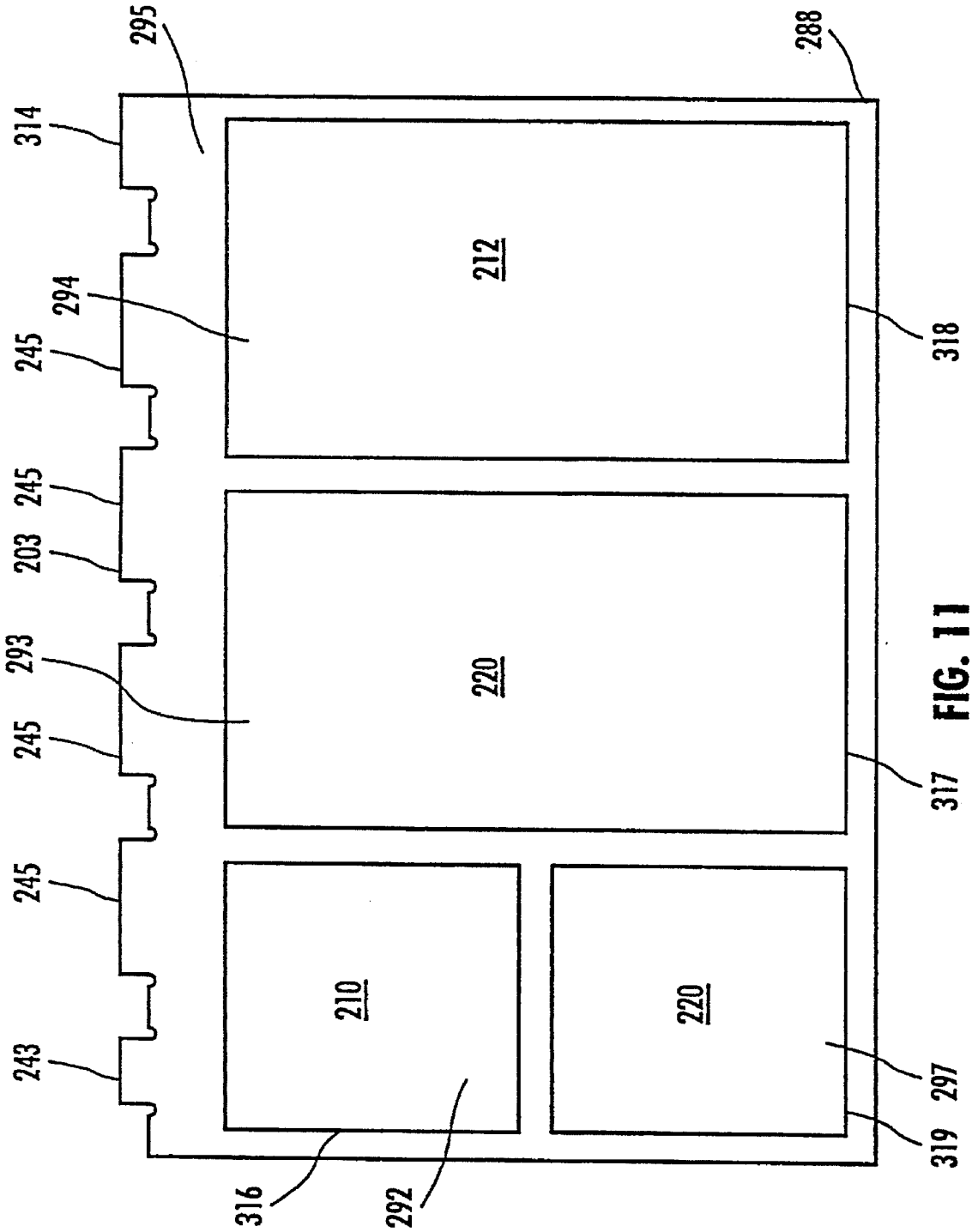
295
288
314
212
294
318
245
245
203
220
293
245
317
245
210
220
243
297
319
316
292

FIG. 11

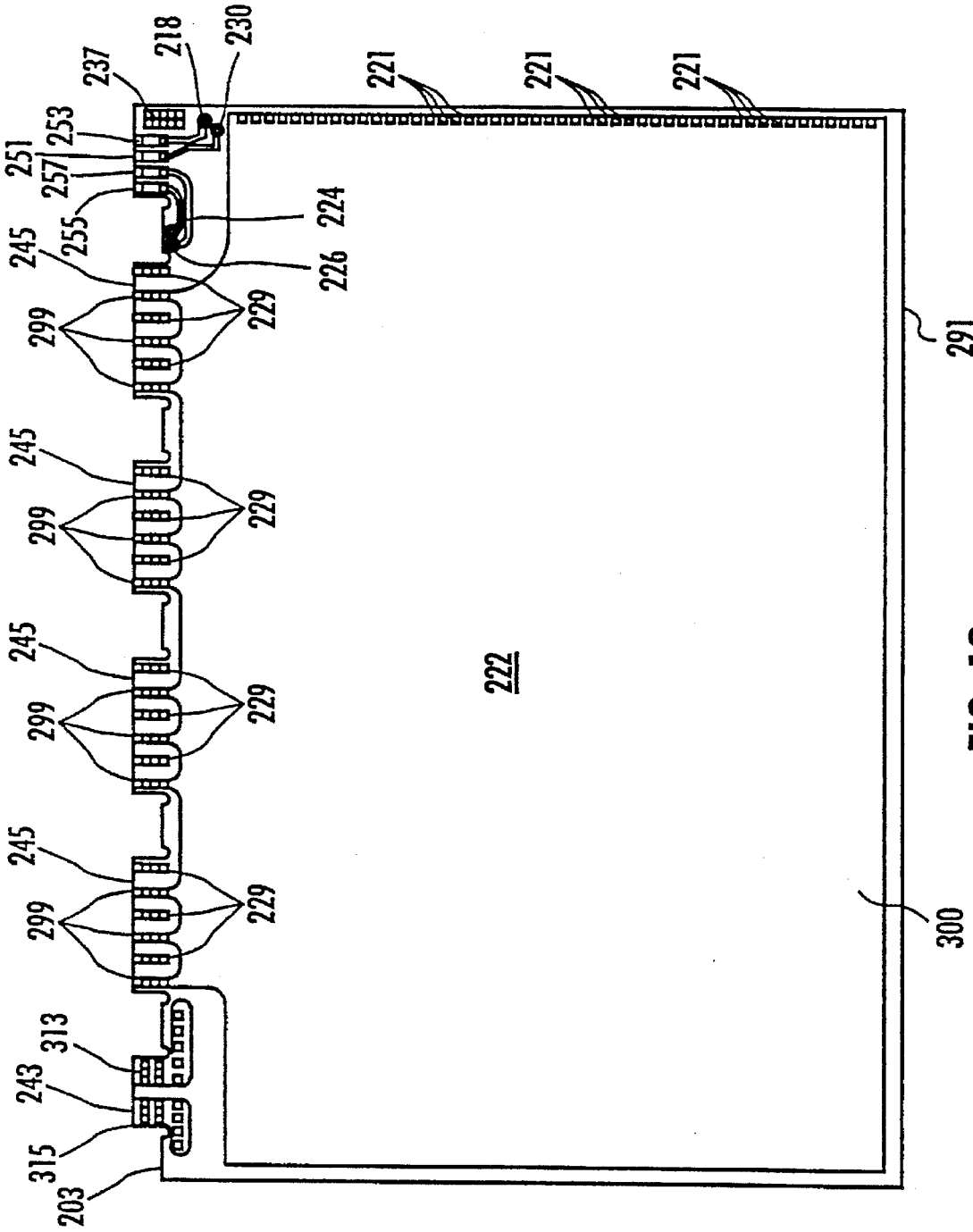
237
218
230
221
221
221
253
251
257
255
224
226
245
299
229
291
222
300
313
243
315
203

FIG. 12

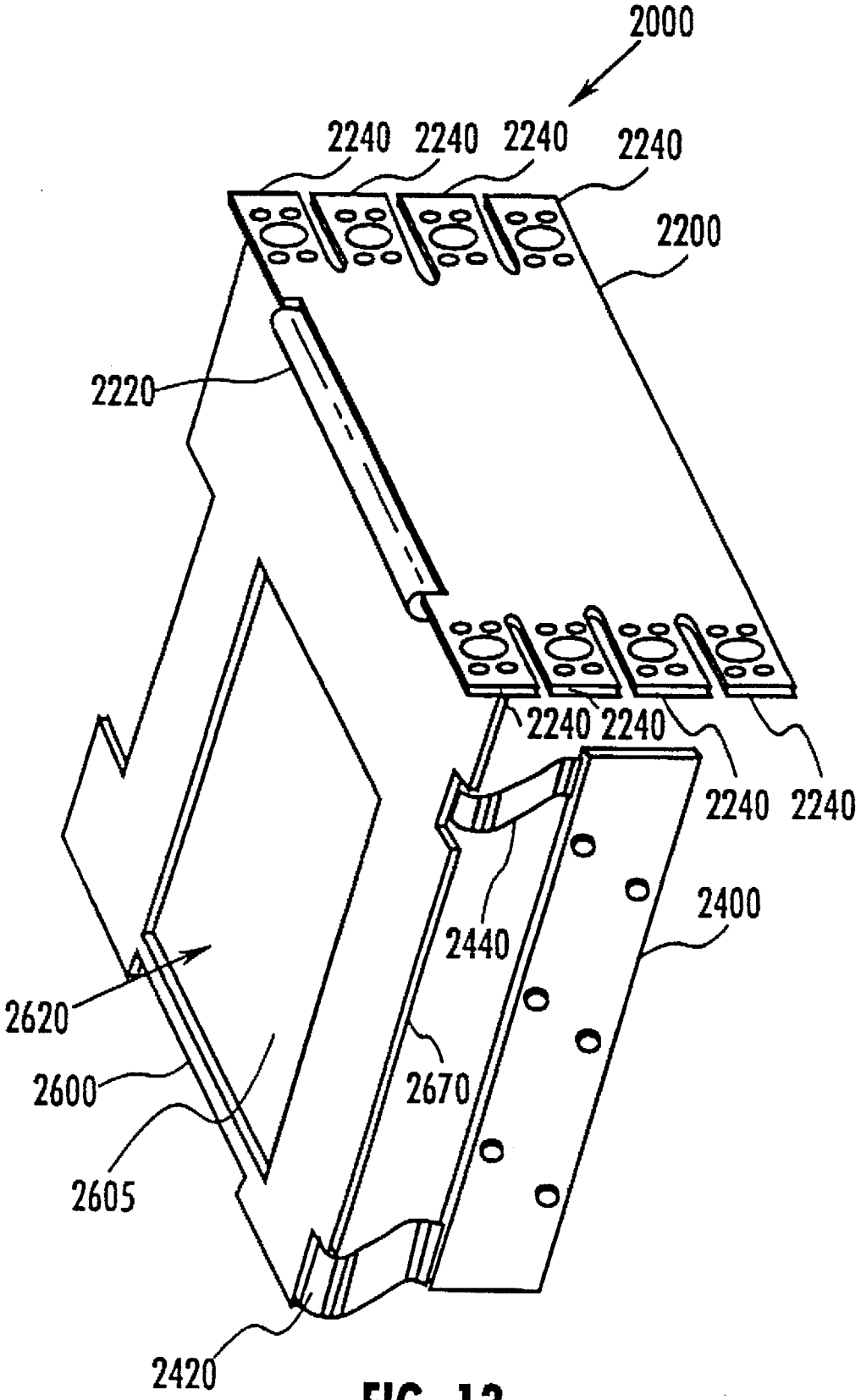
2000
2240
2240
2240
2240
2200
2220
2240
2240
2240
2240
2400
2440
2620
2600
2670
2605
2420

FIG. 13

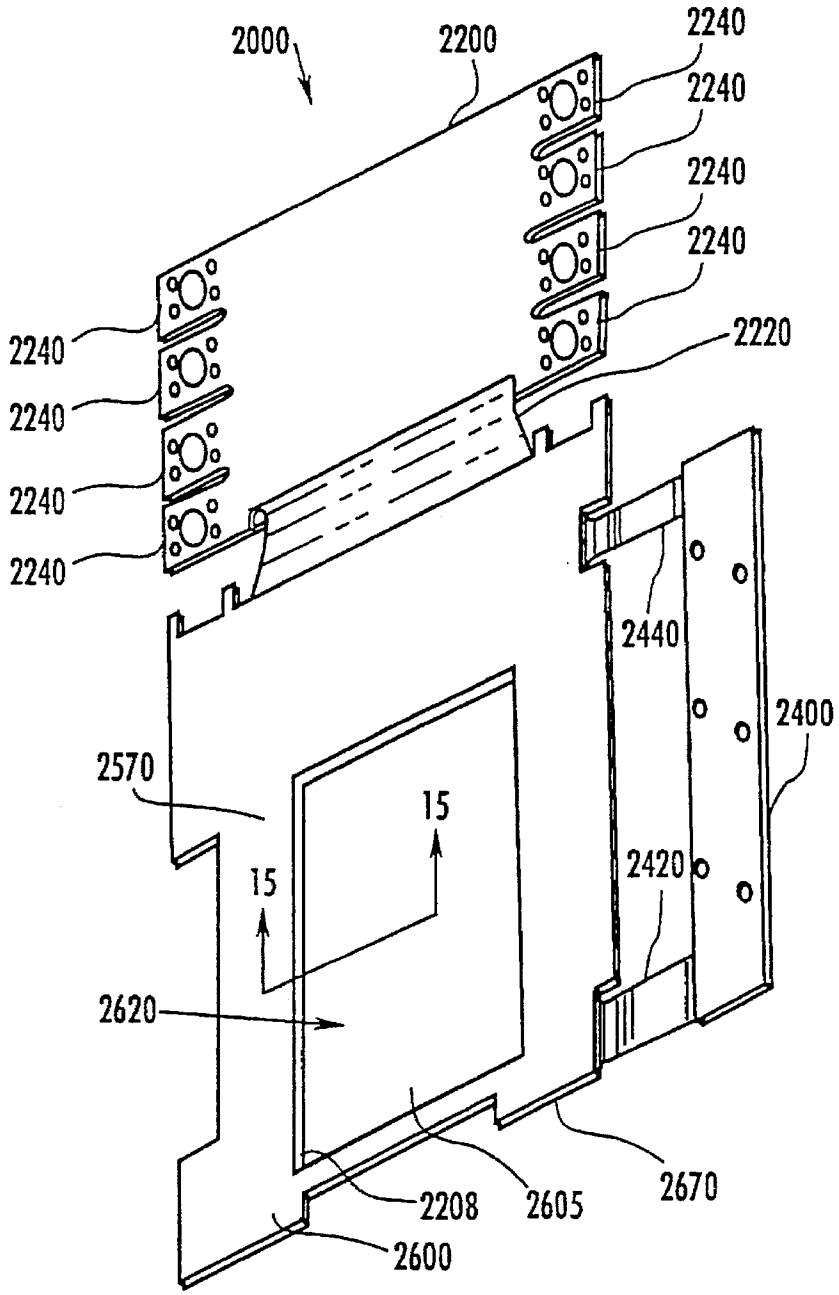
2000
2200
2240
2240
2240
2240
2240
2240
2240
2240
2220
2440
2400
2570
15
15
2420
2620
2208
2605
2670
2600

FIG. 14

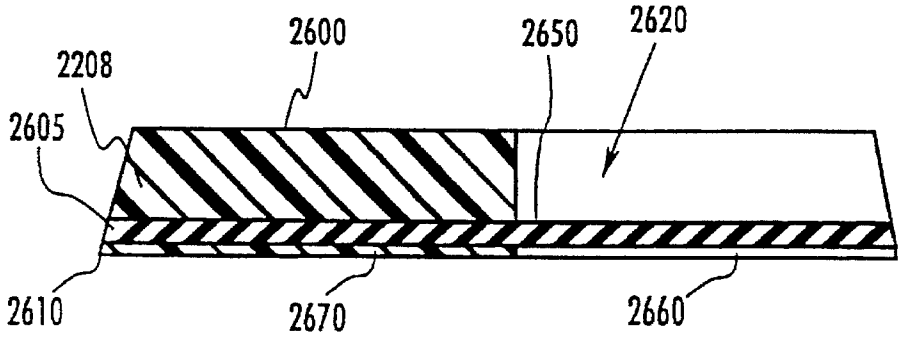
2600
2650
2620
2208
2605
2610
2670
2660

FIG. 15

WIRELESS CIRCUIT BOARD SYSTEM FOR A MOTOR CONTROLLER

CROSS-REFERENCE TO RELATED APPLICATIONS

The present application is related to U.S. patent application Ser. No. 08/316,667, filed Sep. 30, 1994 by Woychik, now U.S. Pat. No. 5,484,965, U.S. patent application Ser. No. 08/292,491, filed Aug. 18, 1994 by Wieloch which is the parent of U.S. Ser. No. 08/522,906, filed Nov. 3, 1995 by Wieloch, U.S. patent application Ser. No. 08/527,120 entitled, "Circuit Board Having A Window Adapted To Receive A Single In-Line Package Module," filed Sep. 12, 1995 by Woychik, U.S. patent application Ser. No. 08/527,315 entitled, "A Module Interconnect Adapted For Reduced Parasitic Inductance," filed Sep. 12, 1995, by Woychik, U.S. patent application Ser. No. 08/537,216 entitled, "Rigid-Flex Circuit Board Having a Window for an Insulated Mounting Area," filed by McLaughlin et al on an even date herewith, U.S. patent application Ser. No. 08/536,839 entitled "A Multilayer Circuit Board Having A Window Exposing An Enhanced Conductive Layer For Use As An Insulated Mounting Area," filed by Wieloch et al on an even date herewith, U.S. patent application Ser. No. 08/537,722 entitled, "A Method Of Making A Multilayer Circuit Board Having A Window Exposing An Enhanced Conductive Layer For Use As An Insulated Mounting Layer", filed by Wieloch et al on an even date herewith, and U.S. patent application Ser. No. 08/536,736 entitled, "Power Substrate With Improved Thermal Characteristics", filed by Wieloch et al on an even date herewith and U.S. patent application Ser. No. 08/536,877, entitled, "Power Structure", filed by Wieloch et al. on an even date herewith.

FIELD OF THE INVENTION

The present invention relates to a circuit board system for power applications. More particularly, the present invention relates to a wireless motor controller package configured to reduce parasitic inductance associate with circuit board interconnections.

BACKGROUND OF THE INVENTION

In general, high power applications such as motor controllers, inverters, converters, power supplies, or other control devices often utilize a number of circuit boards. Typically, these boards include power modules which house high-power electrical devices such as resistors and semiconductors, logic or customer interface circuit boards (e.g., motherboard) which house microprocessors or other logic devices for performing control functions, and storage or capacitor circuit boards which house charge storage devices and direct current (DC) power busses. For example, in the field of electronic motor controllers, it is commonplace to build a controller package as an assemblage of circuit boards including a power substrate module or other heat dissipating medium. Each of the circuit boards supports components and conducting paths for accomplishing various functions in the completed device.

Such motor controllers generally include control logic circuitry, charge storage circuitry and power components. The control logic circuitry, typically including programmable solid state circuits such as a programmable logic controller mounted on a motherboard or a separate logic circuit module, monitors operating parameters of the motor and generates control signals for driving the motor in

accordance with a preset control routine and various operator inputs. The power components typically include diode rectifying circuits for receiving AC power from a source and converting it to DC power, and power transistors or similar solid state switching devices, such as insulated gate bi-polar transistors (IGBTs), for converting the DC power stored in the charge storage circuitry to controlled AC signals for driving the motor based upon the control signals produced by the control circuitry.

The power components are mounted on a power substrate module circuit board. The logic circuitry is typically mounted on a customer interface or mother circuit board, and the charge storage circuitry is mounted on a capacitor board.

These circuit board systems typically require module or circuit board interconnection systems (e.g., connectors, header assemblies, or other hardware) to interface each circuit board (e.g., the power substrate module, the customer interface board, the motherboard and capacitor board). Module interconnection systems often include pins bent at a 90° angle. First ends of the pins insert into holes in the circuit boards or modules, and the second ends of the pins are inserted into holes in the motherboard. An insulating frame is provided between the first and second ends. The frame which is located proximate the 90° bend in the pins is usually rectangularly shaped and provides a stable seat or structure between the motherboard and the module. The first and second ends of the pins are soldered to contact areas proximate the holes on the modules and the motherboard, respectively. Alternatively, module interconnection systems may include slot edge connectors, card connectors, or other printed circuit board (PCB) connectors, or the circuit boards may be interconnected with external wires, cables or connectors.

Such interconnection systems are not only expensive, bulky, and add to the cost of assembling the circuit board system, but create significant impedance matching problems in high power applications such as in motor controller applications. For example, motor controllers and high power circuits such as inverters, converters, and power supplies often must include snubbing circuits, or other resistive (R), capacitive (C), or inductive (L) networks to tune the circuit boards and reduce the parasitic inductive effects and capacitive effects associated with the circuit board interconnection systems. These parasitic inductance problems between circuit boards are amplified by the very high switching frequency and the power associated with power modules, particularly in the turnoff phase of inverter operation.

Additionally, circuit board systems utilized in power applications often generate a significant amount of heat, and require heat sinks or other thermal management systems to prevent the circuit boards and electrical devices from overheating. Heat sinks are typically metal components relatively large in size and can be secured to circuit boards or associated electrical devices to enhance heat dissipation therefrom. Conventional heat sinks typically add to the cost of assembly of the circuit board system. Therefore, applications such as motor control applications require circuit board systems which are optimized for superior heat dissipation.

Thus, there is a need for a circuit board system for a motor controller optimized to reduce parasitic inductance. There is also a need for a low cost motor controller circuit board system optimized for heat dissipation and ease of assembly.

SUMMARY OF THE INVENTION

The present invention relates to a wireless motor controller including a power substrate circuit board, a capacitive

circuit board, and a first circuit board. The power substrate circuit board includes semiconductor switches, and the capacitive circuit board includes a plurality of storage capacitors coupled between a positive bus and a negative bus. The first circuit board is mechanically and electrically coupled to at least one of the power substrate circuit board and the capacitor circuit board. The positive bus and negative bus on the capacitor circuit board are electrically coupled to the power substrate circuit board solely via printed wire circuit board conductors.

The present invention also relates to a motor controller circuit board system including a power substrate mounting board including semi-conductor switches, a capacitor mounting board including a plurality of storage capacitors coupled between a fist bus and a second bus, and a mounted circuit board including a plurality of mounting areas integral with the mounted circuit board. The mounting area mechanically and electrically receive the power substrate mounting board and the capacitor mounting board. The positive bus on the capacitor mounting board is electrically coupled to the power substrate mounting board via a plurality of printed wire circuit board conductors on the mounted circuit board.

The present invention relates to improved motor controller circuit board system including a power substrate circuit board, a capacitor circuit board, and a first circuit board. The power substrate circuit board and the capacitor circuit board each are mounted to the mother circuit board at an angle greater than 0° and less than 180°. The improvement includes an electrical connection of the power substrate circuit board and the capacitor circuit board solely via printed circuit board conductors.

According to one aspect of the present invention, the circuit board system is used in a motor controller package and includes solderable component module SCM™ interconnects, or board modules, and a mother circuit board. The board modules are mechanically and electrically coupled to the motherboard at a 90° angle. The small foot print associated with the interconnection of the modules and the mother circuit board allows the motor controller to be packaged in a minimal amount of space and reduces the parasitic inductance associated with the interconnection.

In another exemplary aspect of the present invention, the circuit board system allows the heat sinks to be soldered directly to the bottom surface of the power substrate module. The power substrate module is preferably optimized for heat dissipation, thereby providing superior heat transmission at a very low cost using only a minimal amount of board space.

According to an even further exemplary embodiment of the present invention, the motor controller does not utilize external wires or conventional connectors to couple the circuit board modules together. The present invention advantageously utilizes printed wire circuit board conductors and finger connectors to mechanically and electrically couple the circuit board modules to the motherboard. A motherboard may be configured to have slots or apertures for receiving edges of the circuit board modules. The edges of the circuit board modules preferably include finger connectors which can be soldered to mounting features on the motherboard. Alternatively, a continuous flexible circuit board layer integral with the mother circuit board or power module circuit board and the other circuit boards may be utilized to provide interconnection between the circuit board modules, thereby eliminating expensive connector hardware.

BRIEF DESCRIPTION OF THE DRAWINGS

The preferred embodiments of the invention will hereinafter be described in conjunction with the appended drawings, wherein like numerals denote like elements, and:

FIG. **1** is an electrical schematic block diagram of circuitry associated with a motor controller in accordance with a first exemplary embodiment of the present invention;

FIG. **2** is a perspective view of a circuit board system including the circuitry illustrated in FIG. **1** in accordance with the first exemplary embodiment of the present invention;

FIG. **3** is a top view of the motherboard illustrated in FIG. **2**;

FIG. **4** is a top view of the capacitor circuit board illustrated in FIG. **2**;

FIG. **5** is a more detailed schematic electrical diagram of the components and interconnections of the power module circuit board illustrated in FIG. **1**;

FIG. **6** is a top view of the power module circuit board shown in FIG. **2** including the components illustrated in FIG. **5** (without printed circuit board connectors);

FIG. **7** is a cross-sectional view of the power module illustrated in FIG. **6** along line **7**—**7**;

FIG. **8** is a cross-sectional view of the power module illustrated in FIG. **6** along line **8**—**8**;

FIG. **9** is a top view of a first conductive layer in the power module circuit board illustrated in FIG. **6**;

FIG. **10** is a top view of a second conductive layer on the power module circuit board illustrated in FIG. **6**;

FIG. **11** is a top view of an enhanced metal circuit board layer including an insulative frame and copper slugs for the power module circuit board illustrated in FIG. **6**;

FIG. **12** is a top view of a third conductive layer for the power module circuit board illustrated in FIG. **6**; and

FIG. **13** is a perspective view of a multilayer rigid-flex circuit board system in a perpendicular configuration for a motor controller according to a second exemplary embodiment of the present invention;

FIG. **14** is a perspective view of the rigid-flex multilayer circuit board illustrated in FIG. **13** in a flat configuration; and

FIG. **15** is a cross sectional view of the rigid-flex circuit board system illustrated in FIG. **14** along line **15**—**15**.

DETAILED DESCRIPTION OF THE PREFERRED EXEMPLARY EMBODIMENTS OF THE PRESENT INVENTION

Although the following description refers to a specific application of the present drive to control a three-phase motor, the invention may be more generally applicable to both polyphase and single phase motors of various power ratings and sizes. Turning now to the drawings and referring first to FIG. **1**, a motor controller or motor drive control system **10** is illustrated diagrammatically as it would be installed for driving an electric motor **12** at desired speeds. Thus installed, system **10** is coupled to phase conductors **14**, **16**, **18** and a ground conductor **20** via protective circuits, typically including fuses **22**, **24**, **26**.

Control system **10** includes a number of interconnected circuits, preferably configured within a unitary drive package. As illustrated in FIG. **1**, system **10** includes a rectifying circuit **28**, a capacitive circuit **30**, a signal converting circuit **32** and a control circuit **34**. Rectifying circuit **28**, capacitive circuit **30** and signal converting circuit **32** may be of types generally known in the art, such as the circuits incorporated in the Bulletin **1305** motor drives available from the Allen-Bradley Company of Milwaukee, Wis. Rectifying circuit **28** and signal converting circuit **32** are combined as power

circuitry **200** and discussed in greater detail below with reference to FIG. **5**.

In the present embodiment of system **10**, control circuit **34** can be a microprocessor (digital processor) based circuit that includes an analog-to-digital converter (not shown) as a circuit which is integral to the microprocessor. Control circuit **34** can also include memory circuits (not shown), such as RAM and ROM (e.g. EPROM), that may be internal or external to the microprocessor. Programming that controls the microprocessor is stored in ROM, while the microprocessor utilizes RAM to temporarily store variable data which is utilized during the execution of the programs stored in ROM. The analog-to-digital converter converts analog signals (e.g. parameter signals) received by control circuit **34**, as discussed below, to digital data representative of these signals. Accordingly, the analog-to-digital converter produces real-time digital data at a predetermined sampling interval which is representative of parameter signals communicated to control circuit **34**.

Rectifying circuit **28** is coupled to incoming phase conductors **14**, **16**, **18** and includes circuitry for converting alternating current power from the incoming phase conductors to direct current power. Rectifying circuit **28** thus acts as a direct current source within system **10**, supplying DC power to signal converting circuit **32** via a DC bus **36** including signal converting circuit input lines **38** and **40**. Signal converting circuit **32** receives DC power from bus **36** and includes circuitry, preferably including solid state switching elements (not shown in FIG. **1**), for generating pulsed power signals at desired, variable frequencies for driving motor **12**.

A bus voltage monitoring circuit **42** is coupled across lines **38** and **40** of DC bus **36** and includes circuitry for measuring the DC voltage difference between lines **38** and **40** and for producing a signal, representative of the DC bus voltage. Voltage monitoring circuit **42** is, in turn, coupled to control circuit **34** and provides the DC bus voltage signal to control circuit **34** for control of motor **12** as described below. A bus voltage current monitoring circuit **44** is also coupled to DC bus **36** and includes circuitry for measuring the current flowing through DC bus **36** and producing a signal representative thereof, which is in turn applied to control circuit **34**.

In addition to inputs from voltage and current monitoring circuits **42** and **44**, control circuit **34** is typically coupled to a number of input channels, designated generally by the reference numeral **46**. Channels **46** may receive incoming signals from such external elements as start and stop circuits, reverse and jog switches and the like, typically arranged in a control terminal block (not shown). Such inputs are communicated to control circuit **34**, preferably through an opto-isolating circuit **48** for protecting control circuit **34** from power surges. Moreover, control circuit **34** receives input signals through one or more ports **50**. One such port **50** is generally coupled to a command input device, such as a potentiometer (not shown), for generating and supplying control circuit **34** with a target or desired output speed or frequency level. Other ports **50** may be provided for various programming and control interface devices, such as a hand-held human interface module (not shown) or a digital computer data link. One or more output or monitoring ports **51** are preferably linked to control circuit **34**, along with appropriate analog circuitry, for selectively monitoring the various operating parameters of system **10**, such as the desired and actual frequency or speed outputs.

Control circuit **34** is coupled to signal converting circuit **32** both for receiving signals from circuit **32** and for communicating control signals, to circuit **32** to drive motor **12**. In response to the control signals, signal converting circuit **32** generates pulsed drive signals that are applied to motor **12** via output lines or conductors **52**. Motor **12** is also coupled to system **10** via a ground conductor **54**. Signal converting circuit **32** includes circuitry (not shown) for monitoring the output current of the drive signals applied to motor **12** through each phase conductor **52** and for generating current signals. These current signals are communicated to control circuit **34** as feedback for control of motor **12**. In addition to the output current signals, signal converting circuit **32** may include circuitry (not shown) for detecting and monitoring other operating parameters of motor **12** or system **10**, such as temperature.

Control circuit **34**, voltage monitoring circuitry **42**, current monitor circuit **44**, control circuit **34**, and opto-isolating circuit are preferably mounted on an interface or mother circuit board **62**. Rectifying circuit **28** and signal converting circuit **32** are mounted on at least one power substrate circuit board **201** as power circuitry **200** (FIG. **5**). Capacitive circuit **30** is mounted on a capacitor circuit board **60**. Preferably, rectifying circuit **28** and signal converting circuit **32** may be divided into three separate circuits for each phase of input power and of motor **12**. Each of the three circuits **28** and **32** may be mounted on a separate power substrate circuit board **201**. Alternatively, capacitive circuit **30**, rectifying circuit **28**, and signal converting circuit **32** may be mounted on a single circuit board.

With reference to FIG. **2**, mother circuit board **62** is a multi-layer circuit board which houses three power module circuit boards **201** and capacitor circuit board **60** in a perpendicular fashion. Capacitor circuit board **60** is mounted in a mounting feature, area or region **65**, and circuit boards **201** are mounted in mounting features, areas or regions **69**. Preferably, heat sinks **302** are disposed on circuit boards **201** in a parallel fashion with other circuit boards **201**. The orientation of circuit boards **201** and **60** provides optimum heat transfer from system **10**. A fan (not shown) may be employed to blow air in parallel with boards **201** and heat sinks **302**.

In FIG. **3**, mounting region **65** includes trenches, slots or apertures **82** for receiving control, power and logic signals and trenches, slots or apertures **75** dedicated to receive power signals from board **60**. Each aperture **75** includes plated regions or finger connectors **86** and **88**. Finger connectors **86** are dedicated to receive a negative bus from board **60** (e.g., bus **222** in FIGS. **5–12**). Finger connectors **88** are dedicated to receive the positive bus from capacitor circuit board **60** (e.g., bus **220** in FIGS. **5–12**).

Motherboard **62** also includes mounting features, areas, or regions **69** for receiving circuit boards **201**. Each mounting region **69** includes four slots, trenches, or apertures **75** having finger connectors **86** and **88** dedicated to receive positive and negative buses from capacitor board **60**. Additionally, mounting region **69** includes an aperture **71** dedicated to receive and provide motor output signals such as on bus **52** (FIG. **1** or busses **216** and **218** in FIGS. **5** and **9**) and control signals for power circuitry **200**. Mounting regions **69** also each include an aperture **73** having finger connectors dedicated to receive phase power inputs such as those provided on inputs **14**, **16** and **18** (FIGS. **1** or phase inputs **210** and **214** in FIG. **5**) as well as logic or control signals.

With reference to FIG. **4**, capacitor circuit board **60** includes two mounting legs **105** and five mounting legs **115**. Mounting legs **115** preferably include finger connectors **117**

and **119** for coupling with finger connectors **86** and **88**, respectively, associated with aperture **75**. Similarly, mounting legs **105** include finger connectors (not shown) for interfacing with the finger connectors associated with apertures **82**. With reference to FIGS. **3** and **6**, aperture **71** is configured to receive mounting leg **314** of circuit board **201**, and aperture **73** is configured to receive mounting leg **243** of board **201**. Mounting legs **245** include finger connectors **299** and **229** (FIG. **12**) for interfacing with finger connectors **86** and **88**, respectively, of apertures **75**. Mounting legs **243**, **245** and **314** are discussed in greater detail with reference to FIGS. **6–12**.

The configuration of boards **60** and **201** including mounting legs **105**, **115**, **243**, **245**, and **314** provide a stable mechanical and electrical interconnection between boards **60**, **62**, and **201**. Such a configuration and interconnection scheme (e.g., the SCM™ interconnection scheme) allows system **10** to be packaged in a very small package and yet have minimal parasitic inductance associated with the interconnection of boards **60**, **62** and **201**. Additionally, system **10** is shown as a wireless motor controller having no external wire connections between boards **60**, **62** and **201**.

With reference to FIG. **5**, power circuitry **200** and board **201** are described in great detail below, power circuitry **200** performs the function of converting an alternating current (AC) power signal to a direct current (DC) power signal and then inverting the DC power signal to an AC output signal, such as by a pulse-width-modulation technique for driving electric motor **12**. Power circuitry **200** includes rectifiers **202**, semiconductor switches **204**, and a temperature sensor **206**. Rectifiers **202** are preferably 40EPS12 power rectifiers, and semiconductor switches **204** are preferably IRGPH50MD2 insulated gate bi-polar transistors (IGBT's). Rectifiers **202** and semiconductor switches **204** are preferably packaged in surface mount packages **208** (FIG. **6**) such as a D packs, D2 packs, D3 packs, ice packs, or other high density board mounting packages. Rectifiers **202** and switches **204** may be replaced by other power semiconductor devices such as a voltage regulator, diode bridge, operational amplifier, thyristor, SCR, or triac.

Power circuitry **200** receives the single phase alternating current (AC) power signal at a phase input bus **210** and provides the AC motor output signal to a motor (not shown) at a motor output bus **212**. Power circuitry **200** also includes a phase return bus **214** associated with the AC power signal at bus **210**, a first gate control bus **216**, a second gate control bus **218**, a positive DC power bus **220**, a negative DC power bus **222**, a temperature signal bus **224**, and a ground bus **226**. Additionally, power circuitry **200** includes a first gate return bus **228** and a second gate return bus **230**. Busses **210**, **212**, **214**, **220**, and **222** preferably include numerous connector lines, finger connectors, pins, or other connection interface for conducting signals to and from power circuitry **200** (discussed in more detail with reference to FIGS. **9** and **12**). A bank **205** of switches **204** is coupled between power bus **220** and motor output bus **212**, and a bank **207** of switches **204** is coupled between motor output bus **212** and power bus **222**.

As shown in FIG. **6**, power circuitry **200** is mounted on a multilayer circuit board **201** to form a power substrate module **240**. Bank **205** of switches **204** is mounted in a window or recess **242** in a multilayer circuit board **201**, and bank **207** of switches **204** is mounted in a recess **244** in multilayer circuit board **201**. Multilayer circuit board **201** also includes recesses **260** and **262** for holding rectifiers **202**. Multilayer circuit board **201** is comprised of a mounting layer **246** (e.g., at the bottom of recesses **242**, **244**, **260** and **262**) and at least one additional circuit board layer **248**.

Rectifiers **202** and switches **204** are preferably power semiconductor devices, resistors, diodes, or other components requiring relatively high heat dissipation. Rectifiers **202** and switches **204** are preferably mounted in a plastic or ceramic package **208** or other casing and include a lead frame **209** (FIG. **7**) which is electrically connected to the drain of switches **204** or electrically coupled to the cathode of rectifiers **202**. Leads **254** are connected to the gate of switches **204**; leads **252** are coupled to the drain of. switches **204**; and leads **250** are coupled to the source of switches **204**. Lead frame **209** is electrically and mechanically coupled to leads **252** of switches **204** and mounting layer **246**. Rectifiers **202** include an anode lead **259** and a cathode lead **265**. Rectifiers **202** are packaged similar to semiconductor switches **204** and include lead frame **209** (FIG. **7**) electrically and mechanically coupled to mounting layer **246** and cathode lead **265**.

Module **240** includes footprints or mounting areas (not shown in FIG. **6**) in a pattern configured to receive leads **250**, **254**, and **265** and lead frames **209** of rectifiers **202** and switches **204**. The footprint typically includes main pads or contact areas on mounting layer **246** corresponding to lead frames **209** and pads on circuit board layer **248** corresponding to leads **250** and **254**. Because the necessary connections with lead frames **209** are completed through layer **248**, lead **252** can be removed from switches **204** and lead **259** can be removed from rectifiers **202**.

In the embodiment shown in FIG. **6**, recesses **242**, **244**, **260** and **262** are rectangular and shaped in accordance with the shape of rectifiers **202** and switches **204**. Recesses **242**, **244**, **260** and **262** each include four semi-circular corners **261** having a radius of 0.047 inches. Semi-circular corners **261** ease the manufacture of recesses **242**, **244**, **260** and **262**.

Recesses **242** and **244** also each include three placement members **263**. Members **263** are made from layer **248**. Members **263** are preferably 0.068 inches wide and 0.646 inches long. Recesses **242** and **244** are each 0.834 inches wide and 2.756 inches long. Recesses **242** and **244** are configured to hold four of switches **204** in the spaces between placement members **263**. Recesses **260** and **262** are each 0.638 inches wide and 0.840 inches long. The dimensions and shapes of recesses **242**, **244**, **260** and **262** advantageously allow rectifiers **202** and switches **204** to be securely held in multilayer circuit board **201** for ease of manufacture (e.g., soldering to board **201**) and yet be easily inserted and removed. Recesses **242**, **244**, **260** and **262** are preferably at least one circuit board layer deep (e.g., the depth of layer **248** or approximately 0.013 inches). Alternatively, recesses **242**, **244**, **260** and **262** can be several layers deep.

With reference to FIGS. **7** and **8**, board **201** (FIG. **1**) or module **240** (FIGS. **7** and **8**) is comprised of circuit board layer **248** and mounting layer **246**. Layer **248** is preferably a double sided printed circuit board layer including a conductive layer **280**, an insulative layer **281**, and a conductive layer **283**. Layer **280** is a 1 oz. copper layer (0.0014 inch thick metal layer) which is plated to at least a 0.0024 inch final thickness. Layer **283** is a 2 oz. copper layer (0.0028 inches thick). Layer **281** is preferably 0.009 to 0.006 inch thick layer of glass epoxy material. An insulative layer **285** is preferably an at least 0.005 inch thick layer of prepreg bond film material adhered between layers **246** and **248**.

Layer **246** is an enhanced metal circuit board layer including an enhanced thermally and electrically conductive layer **288**, an insulative layer **290**, and a conductive layer **291**. Layer **246** is a double sided printed circuit board layer.

Enhanced conductive layer **288** is comprised of conductive members or slugs **292**, **293** and **294** mounted in an insulative frame **295**. Enhanced metal circuit board layer **246** also includes a conductive member or slug **297** (FIG. **6**), similar to slug **292** (FIGS. **6** and **7**), for the second rectifier **202**. (FIG. **6**). Insulative layer **290** is placed on enhanced conductive layer **288** as a resin, uncured adhesive, or an epoxy laminate and cured to form a rigid layer. Layer **290** is preferably at least one 0.002 inch layers (e.g., two) of a prepreg bond film material.

Insulative frame **295** is a 0.0324 inch thick frame having rectangular apertures **316**, **317**, **318**, and **319** (FIG. **11**) configured to support slugs **293**,**294**, **295** and **297**, respectively. Insulative frame **295** is manufactured from a glass epoxy, multiple layers of prepreg bond film material, or other insulative material. Slugs **292**, **293**, **294** and **297** are preferably 0.0324 inch thick rectangular copper members which are significantly larger than lead frames **209** or the footprint associated with rectifiers **202** and switches **204**. The large size of slugs **292**, **293**, **294**, and **297** enhances the thermal capabilities of board **201**. Conductive layer **291** is a 1 oz. copper layer (0.0014 inch thick metal layer) which is plated to a thickness of at least 0.0024 inches thick.

Conductive layers **280**, **283** and **291** and slugs **292**, **293** and **294** are preferably copper, but can be silver, conductive inks, aluminum, or other conductive materials which are etched or deposited to provide conductors such as a printed circuit board conductor (not shown in FIGS. **5–9**). Insulative layers **281**, **285** and **290** and insulative frame **295** are preferably glass reinforced epoxy, prepreg bond film, BT, GR4, FR4, paper mica, teflon fluorolpolymer, insulative resin, or other insulating materials. Insulative layer **285** is between layers **246** and **248** and prevents printed circuit conductors (not shown in FIGS. **7** and **8**) from shorting with printed circuit conductors of other layers.

In the presently preferred embodiment, conductive layers **280**, **283**, **291** and slugs **292**, **293** and **294** have the same coefficient of thermal expansion as insulating layers **281**, **285** and **290**, and frame **295**. In particular, all conductive layers and slugs are made of copper and all insulating layers are reinforced resinous layers formulated to provide a coefficient of thermal expansion matching that of copper. Thus, as the various layers of module **240** are heated during operation, heat is dissipated by slugs **292**, **293** and **294** to surrounding portions of board **201** and to a heat sink as described below. As module **240** expands and contracts in subsequent thermal cycles due to use and to environmental conditions, internal stresses are minimized by the uniform expansion of all layers of board **201**. Additionally, module **240** is thermally expansion matched to the packages of rectifiers **202** and switches **204**.

Slugs **292**, **293**, **294** and **297** and insulating frame **298** cooperate to provide footprints, pads, mounting areas or contact areas for receiving elements of packages, lead frames **209** of rectifiers **202** and switches **204** or bare silicon components. Slug **293** is electrically coupled to bus **220** and electrically coupled to lead frame **209** of switches **204** in bank **205**. Slug **294** is electrically coupled to lead frame **209** of switches **204** in bank **207** and electrically coupled to motor output bus **212**. Slug **292** is coupled to phase input bus **210** and receives lead frame **209** of rectifier **202** in recess **262**. Anode lead **259** of rectifier **202** in recess **260** is also coupled to bus **210**. Slug **297** (FIG. **6**) is coupled to bus **214** and lead frame **209** of rectifier **202** in recess **262**. The electrical coupling of the various components and busses is accomplished through the use of plated surfaces and holes as will be described more fully below.

Walls **371** of recesses **242**, **244**, **260** and **262** are preferably plated with a conductive material such as copper. The plating of walls **371** allows layers **280** and **283** to be coupled to slugs **292**, **293**, **294** and **297**.

A heat sink area **300** is preferably provided on layer **291** of enhanced metal circuit board layer **246** to receive a heat sink **302**. Heat sink area **300** allows a heat conductive component such as heat sink **302** to be soldered directly to mounting or enhanced metal circuit board layer **246**. Heat sink **302** can be a copper, aluminum, or other conductive material designed for dissipating heat. Heat sink **302** is preferably a light weight, crimped or stamped, continuous copper coil material or industry standard heat sink such as those manufactured by Thermalloy, Inc. or E&G Wakefield Engineering. Lightweight copper coil materials such as those ordinarily utilized in automotive radiator systems provide an inexpensive heat dissipating medium for module **240** which can be directly soldered to board **201**.

Module **240** is preferably a solderable component module (SCM™) interconnect, SIP module, or other board which can be perpendicularly mounted in a parent or motherboard (not shown). Preferably, the motherboard has an aperture or trench configured to receive edge **203** (FIG. **6**) of board **201**. Board **201** includes a phase voltage mounting leg **243**, DC bus mounting legs **245** and a control signal mounting leg **314**. Legs **243**, **245**, **314**, and edge **203** are shaped and arranged to ease placement and soldering of board **201** in the motherboard.

With reference to FIGS. **9–12**, the printed circuit layout for conductive layers **280**, **283**, and **291** and enhanced conductive layer **288** of board **201** are shown in detail and constructed as described below. Layers **280**, **283**, and **288** and **291** are optimized to minimize lead lengths associated with circuitry **200** so inductive effects on board **201** are minimized. Layers **280**, **283** and **288** have busses running in parallel to maximize capacitance and minimize inductance associated with board **201**.

Phase voltage mounting leg **243** includes a finger connector **315** and a finger connector **313** (FIG. **9**). Finger connector **315** is coupled to bus **210**, and finger connector **313** is coupled to bus **214**. DC mounting legs **245** preferably include power finger connectors **229** and power finger connectors **299**. Finger connectors **229** and **299** are arranged adjacent each other; six finger connectors **299** and **229** are provided on each mounting leg **245**. Finger connectors **229** and **299** are coupled to buses **220** and **222**, respectively. This advantageous orientation of finger connectors **229** and **299** reduces parasitic inductance associated with making connections between module **240** and the motherboard, circuit boards or other mounting interface.

Control signal mounting leg **314** includes finger connectors **238**, **239** and **241** on layer **280** and finger connectors **251**, **253**, **255** and **257** on layer **291** (FIG. **12**). Finger connectors **239** and **241** are coupled to buses **216** and **228**, respectively. Finger connectors **251** and **253** are coupled to buses **230** and **218**, respectively. Finger connectors **255** and **257** are coupled to buses **224** and **226**, respectively.

Finger connectors **229**, **299**, **255**, **257**, **251**, **253**, **238**, **239**, **241**, **313** and **315** on mounting legs **243**, **245** and **314** advantageously reduce noise, parasitic inductance, and impedance associated with the connections between module **240** and other circuit boards in motor controller. Reducing parasitic inductive effects allows module **240** to be electrically viewed as though it is mounted on the same circuit board as other components on the motherboard, thereby simplifying the design of the motor controller system.

Additionally, reducing parasitic inductive effects allows snubber circuits, filters and other networks typically required in high power applications to be eliminated.

In FIG. **9**, motor output bus **212** is shown etched on layer **280** so source leads **254** of switches **204** in bank **205** can be coupled to motor output bus **212**. Similarly, negative DC power bus **222** on layer **280** is etched so source leads **254** of switches **204** in bank **207** can be coupled to bus **222**.

Phase input bus **210** is etched on layer **280** for coupling to rectifiers **202** in recesses **260** and **262** (FIGS. **6** and **7**). Bus **214** is also etched in layer **280** so anode lead **259** of rectifier **202** in recess **260** can be coupled to bus **214**. Buses **210** and **214** are coupled to finger connectors **313** and **315**, respectively, on mounting leg **314** of board **201**. As shown in FIG. **5**, recess **260** (FIG. **6**) is coupled to bus **210**, and recess **262** is isolated from any connectors on layer **280**. Similarly, recess **242** (FIG. **6**) is isolated from any connectors on layer **280**. Recess **244** is coupled to bus **212**. Bus **222** is coupled through holes **221** on layer **280** to reduce noise associated with circuitry **200**.

As shown in FIG. **10**, conductive layer **285** is shown etched to provide buses **210**, **212**, **214** and **220**. Bus **220** is coupled to finger connectors **229**. Bus **212** is coupled to plated holes **237** which provide connections to bus **212** on other layers, such as figure connector **314** on layer **280** (FIG. **9**). Buses **214**, **210**, **212** and **220** on layer **283** are preferably configured to match the geometry of enhanced conductive layer **288** (FIG. **11**). In this way, enhanced conductive layer **288** does not have to be etched or otherwise manipulated to form conductive lines.

Layer **283** is configured so that bus **212** corresponds to recess **244**, bus **220** corresponds to recesses **242** and **262**, and bus **210** corresponds to recess **260**. Plated holes **323** allow connections of bus **220** to other conductive layers such as layers **280**, **288** and **291**.

With reference to FIG. **11**, insulative frame **295** is designed so slugs **292**, **293**, **294** and **297** are placed in alignment with buses **210**, **220**, **212** and **220**, respectively. Slugs **292**, **293**, **294** and **297** preferably fit flush within apertures **316**, **317**, **318** and **319**, respectively, so voids are eliminated between frame **295** and slugs **292**, **293**, **294**, and **297**. Apertures **316**, **317**, **318** and **319** are spaced 0.159 inches apart to provide adequate isolation between slugs **292**, **293**, **294** and **295** and are milled in a fiber reinforced insulative layer such as FR-4 fiber reinforced epoxy circuit board or prepreg material to form frame **295**. Alternatively, frame **295** may be formed by molding, cutting, drilling, or other configuration process. Slugs **292**, **293**, **294** and **297** may be advantageously formed of other shapes or sizes. Preferably, slugs **292**, **293**, **294** and **297** have an enhanced thickness and area to assist in the dissipation of heat from switches **204** and rectifiers **202**.

As shown in FIG. **12**, negative DC power bus **222** including heat sink area **300** is provided on conductive layer **291**. Bus **222** is coupled to finger connectors **299** on board **201** of module **240**.

Finger connectors **229**, **299**, **313**, **315**, **237**, **255**, **251**, **253** and **257** provide an advantageous coupling of the various buses between layers **280**, **283**, **288** and **291**. Additionally, negative DC power bus **222** is coupled between conductive layers **280**, **283**, **288** and **291** via plated holes **221**. Bus **222** is configured to cover almost all of layer **291** and provide heat sink area **300**.

Finger connectors **229**, **239**, **241**, **251**, **253**, **255**, **257**, **294**, **313** and **315** are configured to be coupled to plated-through finger connectors or hemicylinders in the mounting hole, aperture, trench or slot in the motherboard. Alternatively, mounting legs **243**, **245**, and **314** may be adapted for use in a slot edge connector, card connector, or other printed circuit board connector.

It should be noted that the foregoing construction of module **240** creates relatively large, parallel planes of conductive material defining busses **220** and **222** (see FIGS. **10** and **12**). Unlike known power substrates, wherein DC busses are typically defined as surface traces on a substrate material and coupled to the power components by wire bonding techniques, the arrangement of busses **220** and **222** provides a large area for canceling or reducing parasitic inductance during switching phases of the inverter circuitry. The inventors have found that voltage spikes during turnoff phases of operation of switches **204** may thus be virtually eliminated without recourse to snubbing circuitry or the like.

It should also be noted that the preferred structure described above provides considerably enhanced thermal properties heretofore unavailable in power substrate modules. Thus, as mentioned above, the use of thermally matched layers, including slugs **292**, **293**, **294** and **297**, affords consistent and uniform expansion of the various portions of substrate module **240** throughout successive thermal cycles. Moreover, the use of relatively massive slugs which are thermally matched to the board material as bases for component packages **208** not only provides for electrical connection with the circuit components, but affords a large heat dissipative layer in direct contact with the components. Where such layers are shared by several components, as in the preferred design described above, the slugs provide more uniform steady state temperatures and temperature gradients across and through board **201** than were available in heretofore known power substrates. Slugs **293** and **294** aid in paralleling switches **204** due to the low thermal resistance between adjacent switches **204** in banks **205** and **207**. In addition, because the slugs are thermally coupled to bus **291**, and thereby to heat sink **302** through a single insulating layer **290**, heat generated by operation of the power circuitry is transferred more directly to the heat sink than in known designs.

The manufacture of board **201** of module **240** is discussed below with reference to FIGS. **6–12**. Enhanced conductive circuit board layer **246** is formed by placing slugs **292**, **293**, **294** and **297** in windows or apertures **316**, **318**, **319** and **317** of frame **295**, respectively. Slugs **292**, **293**, **294** and **297** can be adhered in frame **295** with epoxy, or other adhesives. An uncured prepreg bond film layer such as layer **290** is then spread on one side of enhanced conductive layer **288** to form insulative layer **290**. Layer **290** is preferably two 0.002 inch thick epoxy laminate layers. Conductive layer **291** is attached to layer **290** and then can be etched to form the conductive pattern shown in FIG. **12**. Enhanced conductive layer **288** advantageously does not have to be etched due to the insulative nature of frame **295**.

Layer **248** can be a conventional circuit board layer which is well known in the art. Layers **280** and **283** are attached to an insulative layer **281**. Layer **283** is etched to form particular conductive patterns as shown in FIG. **6**. After etching layer **283**, layer **248** is then attached to layer **246** by placing an adhesive insulative layer **285** between layers **248** and **246**. Layers **246** and **248** are then heat and pressure cured so layers **246** and **248** are attached and layer **290** is cured. Layer **280** can also be etched to from the pattern shown in FIG. **9**, including footprints and contact areas for receiving switches **204** and temperature sensor **206**.

After attachment of layers **246** and **248**, multilayer circuit board **201** is adapted to form windows or recesses **260**, **262**, **242** and **244**. Recesses **242**, **244**, **260** and **262** are preferably milled by a depth controlled mill. A depth control mill may

be utilized to form windows without requiring a high tolerance machine because the thickness of slugs **292**, **293**, **294** and **297** in enhanced conductive layer **288** is sufficient (approximately 0.030 inches) to permit a tool, such as a mill cutter, to be lowered through layer **248** to form windows **260**, **262**, **242** and **244** without piercing the slugs. After configuring, cutting, milling, or otherwise forming recesses **242**, **244**, **260** and **262** in multilayer circuit board **201**, holes, such as holes associated with finger connectors **313**, **315**, **229**, **299**, **241**, **239**, **237**, **233**, **327**, and **323** and holes **221** and **323** are drilled in board **201**. After drilling, a solder mask or photo resist layer is applied to layers **280** and **291**, and board **201** is further plated and etched. In particular, layer **291** is etched to form the pattern shown in FIG. **12**. Further plating of circuit board **201** allows walls **371** (FIG. **7**) of recesses **260**, **262**, **242** and **244** to be plated with conductive material. Plating walls **371** allows connection of the mounting area or slugs **292**, **293**, and **297** to layers **280** and **283**.

Alternatively, recesses **242**, **244**, **260**, and **262** may be formed in layer **248** before attaching layers **246** and **248**. Further, recesses **242**, **244**, **260**, and **262** may be formed by drilling, cutting, molding, or otherwise configuring circuit board layer **248**. For example, recesses **260**, **262**, **242** and **244** can be formed by providing mounting areas close to one end of board **201**. Circuit board layer **248** may be a size smaller than layer **246** and shifted to one end so only enhanced conductive layer **246** is provided on the opposite end of board **201**. Also, layer **248** may be comprised of unitary pieces which are configured on top of layer **246** to form recesses **242**, **244**, **260** and **262**.

With reference to FIG. **13**, an advantageous rigid-flex multilayer circuit board system **2000** is shown implemented as a motor controller package. Motor controller circuit board system **2000** includes a module, motherboard, or customer interface board **2200** having connector tabs **2240**, a module or power substrate **2600**, and a module or a capacitor board **2400**. Power substrate **2600** preferably houses IGBT's, SCR's, thyristors or other semiconductor switches (not shown) which provide alternating current (AC) power signals for use by a motor (not shown). Preferably, power substrate **2600** includes a window **2620** which has only a flexible circuit board layer **2605** at a locus between a top surface **2650** and a bottom surface **2670** (FIG. **15**). Preferably, a heat sink (not shown) is mounted on a heat sink area **2660** (FIG. **15**) of surface **2670** and surface mount semiconductor devices are attached to surface **2650** in window **2620**.

In this embodiment, substrate **2600** is configured as a motherboard in the conventional mechanical sense. Alternatively, an additional circuit board (not shown) can be added to system **2000** and utilized as the motherboard. According to another alternative, customer interface board **2200** or capacitor board **2400** can be configured as the motherboard.

System **2000** is preferably manufactured from a single flexible circuit layer **2605**, a rigid circuit board layer **2608**, and a rigid circuit board layer **2210** (FIG. **15**). Layer **2605** is preferably a single or double sided printed circuit board layer including a rigid 0.030 inch thick insulating layer (not shown) disposed between 0.0027 inch thick glass fiber bond ply (e.g., 1080 GF) layers (not shown). The insulating layer can be a fiber reinforced material such as GF4. A 0.0027 inch thick glass fiber bond film layer (not shown) is also provided between layers **2605** and **2508**. A thin conductive or metal layer is provided on top of the top bond film layer.

Layer **2605** is preferably a flexible circuit board layer manufactured by Parlex Corporation of Methuen, Mass. Layer **2605** includes a 0.0007–0.001 inch thick polyimide layer, a 0.001–0.002 inch thick polyimide adhesive layer, a 2.0-ounce (0.0028 inch thick) copper layer, a 0.00125 inch thick polyimide Kapton® MT adhesive polyimide layer, a 2.0-ounce (0.0028 inch thick) copper layer, a 0.001–0.002 inch thick polyimide adhesive layer, and a 0.0007–0.001 inch thick polyimide layer. The layers comprising layer **2605** are attached to each other in the order listed above. Layer **2605** can be doped with diamond material, AlN, Al_2O_3 or other substances to increase thermal conductivity and provide enhanced corona resistance.

Layer **2610** is attached to layer **2605**. Layer **2610** includes an insulating layer of 0.0018–0.0027 inch thick glass fiber bond film material (e.g., 1080 GF or 106) attached to thin conductive or metal layer. The conductive layer is a 0.001 inch thick layer of HTE copper which is plated with a 0.001 inch copper layer.

Layer **2605** is preferably continuous with customer interface board **2200**, substrate **2600**, and capacitor circuit board **2400**. Flexible layer **2605** provides power bus connectors **2420** and **2440** between substrate **2600** and capacitor board **2400**. Connectors **2420** and **2440** preferably house a positive and negative power bus conducting line on each side of connectors **2420** and **2440** (e.g., layer **2605**). Additionally, layer **2605** provides a connection **2220** from substrate **2600** to motherboard **2200**.

Customer interface board **2200** and capacitor circuit board **2400** are preferably disposed at a 90° angle with respect to substrate **2600** as shown in FIG. **13**. A heat sink (not shown) is preferably attached to surface **2670** (e.g., on the same side of substrate **2600** from which board **2200** and capacitor board **2400** extend). This advantageous orientation of system **2000** provides wireless motor controller package which has superior heat dissipation in a compact package. Alternatively, the sides of substrate **2600** upon which electrical devices and heat sinks are mounted can be switched.

The configuration of circuit board system **2000** allows high power connections to be made between board **2200**, board **2400** and substrate **2600** without the use of bulky, unreliable and expensive connectors for interconnecting motherboard **2200**, board **2400**, and substrate **2600**. Further, the flexibility associated with flexible layer **2605** allows board **2200**, board **2400** and substrate **2600** to be manipulated for various mechanical packages and eases manufacture of circuit board system **2000**. The use of connections between board **2200**, board **2400** and substrate **2600** via flexible layer **2605** reduces the use of external wires and connectors and hence, the parasitic inductance associated with the interconnection of circuit boards. Therefore, circuit board system **2000** provides an advantageous compact structure for a motor controller which is not prone to parasitic inductance problems. Additionally, use of layer **2605** for connections dramatically reduces creepage and clearance distance concerns due to the high voltages present. Furthermore, the use of layer **2605** for connections provides impedance control and ground planes in logic interconnect areas of system **2000**.

With reference to FIG. **15**, an enlarged cross sectional view of a portion of system **2000** shows layers **2605**, **2608** and **2610**. Preferably, the thin flexible layer **2605** allows superior heat transfer from surface **2650** to surface **2670** of substrate **2600**. Board **2600** preferably includes heat sink area **2660** on bottom surface **2670** of layer **2605**. Alternatively, window **2620** or area **2660** can be configured to have rigid strips (not shown) of layer **2608** or layer **2610** provided in a matrix across window **2620** or area **2660**. The rigid strips provides superior mechanical strength for system **2000** at window **2620** or area **2660**.

It is understood that, while the detailed drawings, specific examples and particular materials given describe preferred exemplary embodiments of the present invention, they are for the purpose of illustration only. The invention is not limited to the precise details and conditions disclosed. For example, although particular surface mount packages, electrical devices, and circuit board layers are described, the multilayer circuit board may be populated with other types of heat producing components or comprised of different materials. Also, various configurations for a heat sink conducting area may be utilized. Further still, various shapes, sizes, and materials for the copper slugs may be utilized. Moreover, while the particular circuits are shown as motherboards in the mechanical sense, other types of circuits may be housed on the motherboard. Further still, while the power substrate module described above provides rectifying and inverting circuitry for a single phase, modules employing the same construction may be built for three phase rectification and inversion on a single board. Similarly, although the structure described above employs four switching circuits in parallel to accomplish the desired inverting function, modules in accordance with the invention may be built with more or fewer switching devices in parallel, or a single pair of switches per phase. Various changes can be made to the details disclosed without departing from the spirit of the invention which is defined by the following claims.

What is claimed is:

1. A wireless motor controller, comprising:

a power substrate circuit board including semiconductor switches;

a capacitor circuit board including a plurality storage capacitors coupled between a positive bus and a negative bus situated on the capacitor circuit board; and

a first circuit board mechanically and electrically coupled to at least one of the power substrate circuit board and the capacitor circuit board, the positive bus and the negative bus on the capacitor circuit board being electrically coupled to the power substrate circuit board via a connection of solely printed wire circuit board conductors, whereby parasitic inductive effects are reduced as compared with a conductor arrangement in a conventional motor controller system.

2. The wireless motor controller of claim **1** wherein the printed wire circuit board conductors are provided on a flexible circuit board layer extending between the power substrate circuit board and the capacitor circuit board, the flexible circuit board layer providing the connection.

3. The wireless motor controller of claim **1** wherein the first circuit board is a mother board including a first mounting aperture receiving a first edge of the power substrate circuit board and a second mounting aperture receiving a second edge of the capacitor circuit board, the first mounting aperture and the second mounting aperture each having a lateral face with a plated connector, the plated connector being part of the connection.

4. The wireless motor controller of claim **3** wherein the first mounting feature receives a first mounting leg of the power substrate circuit board at a first leg aperture and the second mounting feature receives a second mounting leg at a second leg aperture.

5. The wireless motor controller of claim **1** wherein the positive bus is provided on a first side of the capacitor circuit board and the negative bus is provided on a second side of the capacitor circuit board and the positive bus is coupled to a first set of finger connectors on the power substrate circuit board and the negative bus is coupled to a second set of finger connectors on the power substrate circuit board.

6. The wireless circuit board of claim **5** wherein the first and second sets of finger connectors are located situated interstitially on a first side of the power substrate circuit board and a second side of the power substrate circuit board.

7. The wireless circuit board of claim **6** wherein the second side of the power substrate circuit board includes a ground plane coupled to the negative bus and configured to receive a heat sink.

8. The wireless motor controller of claim **3** wherein the first and second mounting apertures are oval shaped holes having plated through finger connectors on a lateral face of the slot.

9. The wireless motor controller of claim **3** wherein the power substrate circuit board and the capacitor board are mounted in a perpendicular fashion with respect to the mother circuit board.

10. A motor controller circuit board system, the circuit board system comprising:

a power substrate mounting board including semiconductor switches;

a capacitor mounting board including a plurality storage capacitors coupled between a first bus and a second bus, the first bus and the second bus being situated on the capacitor mounting board; and

a mounted circuit board including a plurality of mounting areas integral with the mounted circuit board, the mounting areas mechanically and electrically receiving the power substrate mounting board and the capacitor mounting board, the first bus and the second bus on the capacitor mounting board being electrically coupled to the power substrate mounting board via a connection of solely a plurality of printed wire circuit board conductors on the mounted circuit board, the connection being made without external wires and without external connectors, whereby parasitic inductance is reduced as compared with a conductor arrangement in a conventional motor controller system.

11. The motor controller circuit board system of claim **10** wherein the printed wire circuit board conductors include finger connectors at the mounting areas, and the mounting areas including apertures having lateral faces with plated connectors on the lateral faces.

12. The motor controller circuit board system of claim **10** wherein the power substrate mounting board includes a window exposing an enhanced metal circuit board layer.

13. The motor controller circuit board system of claim **12** wherein the enhanced metal circuit board layer is coupled to the first bus.

14. The motor controller circuit board system of claim **13** wherein the first bus is coupled to the enhanced metal circuit board layer via a plated portion of a wall of the window.

15. The motor controller circuit board system of claim **14** wherein the first bus is provided on a first side of the capacitor mounting board and the second bus is provided on a second side of the capacitor mounting board and the first bus is coupled to a first set of finger connectors on the power substrate mounting board and the second bus is coupled to a second set of finger connectors on the power substrate mounting board.

16. The motor controller circuit board system of claim **15** wherein the first and second sets of finger connectors located situated interstitially on a first side of the power substrate mounting board and a second side of the power substrate mounting board.

17. The motor controller circuit board system of claim **16** wherein the second side of the power substrate mounting board includes a ground plane coupled to the second bus configured to receive a heat sink, wherein the ground plane is coupled to the second bus.

* * * * *