US009436855B2

(12) **United States Patent**
Marcus et al.

(10) **Patent No.: US 9,436,855 B2**
(45) **Date of Patent: *Sep. 6, 2016**

(54) **CARD READER FOR MOBILE DEVICE**

(71) Applicant: **PAYPAL, INC.**, San Jose, CA (US)

(72) Inventors: **David A. Marcus**, Atherton, CA (US); **Hill Ferguson**, San Francisco, CA (US); **Max E. Metral**, Brookline, MA (US); **Egan Schulz**, San Jose, CA (US)

(73) Assignee: **PAYPAL, INC.**, San Jose, CA (US)

(*) Notice: Subject to any disclaimer, the term of this patent is extended or adjusted under 35 U.S.C. 154(b) by 0 days.

This patent is subject to a terminal disclaimer.

(21) Appl. No.: **14/320,533**

(22) Filed: **Jun. 30, 2014**

(65) **Prior Publication Data**

US 2014/0312118 A1 Oct. 23, 2014

Related U.S. Application Data

(63) Continuation of application No. 13/959,531, filed on Aug. 5, 2013, now Pat. No. 8,763,900, which is a continuation of application No. 13/421,502, filed on Mar. 15, 2012, now Pat. No. 8,500,010.

(51) **Int. Cl.**
G06K 7/08 (2006.01)
G06K 13/06 (2006.01)

(52) **U.S. Cl.**
CPC ***G06K 7/082*** (2013.01); ***G06K 7/089*** (2013.01); ***G06K 13/06*** (2013.01)

(58) **Field of Classification Search**
CPC G06K 7/082; G06K 7/089; G06K 13/06
See application file for complete search history.

(56) **References Cited**

U.S. PATENT DOCUMENTS

8,500,010	B1 *	8/2013	Marcus et al.	235/380
8,763,900	B2 *	7/2014	Marcus et al.	235/380
2011/0084140	A1 *	4/2011	Wen	235/449
2012/0052910	A1	3/2012	Mu et al.	

* cited by examiner

Primary Examiner — Kristy A Haupt
(74) *Attorney, Agent, or Firm* — Haynes and Boone, LLP

(57) **ABSTRACT**

A card reader for use with a mobile device includes a foot and/or a housing for a jack on the bottom of the card reader prevents the card reader from accidently turning off the mobile device during use.

20 Claims, 5 Drawing Sheets

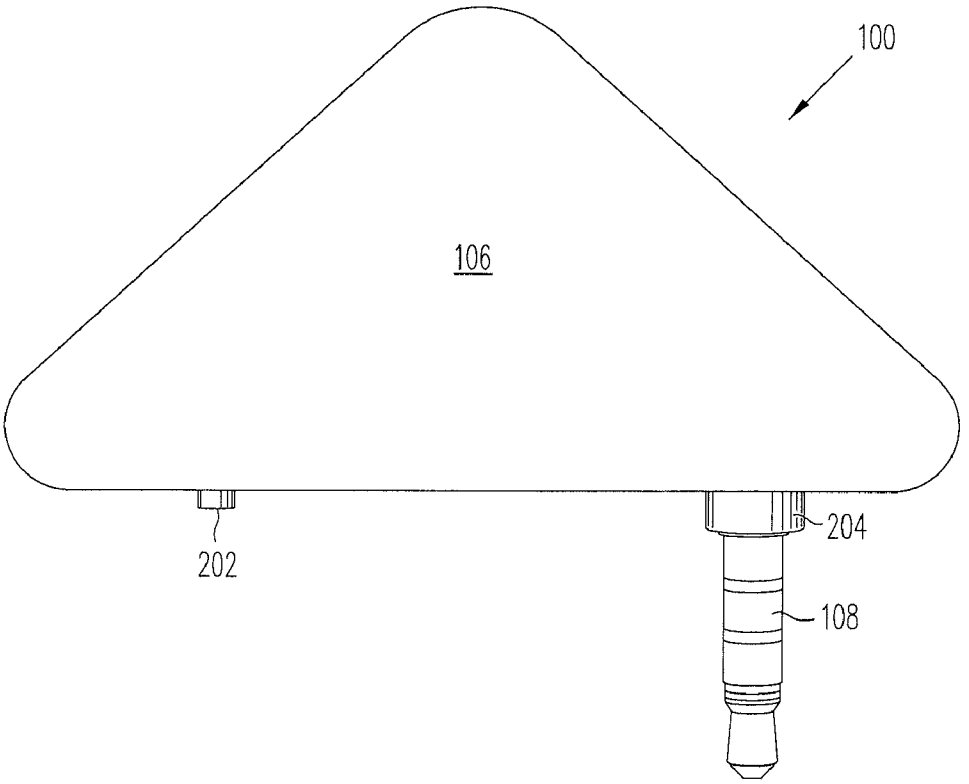

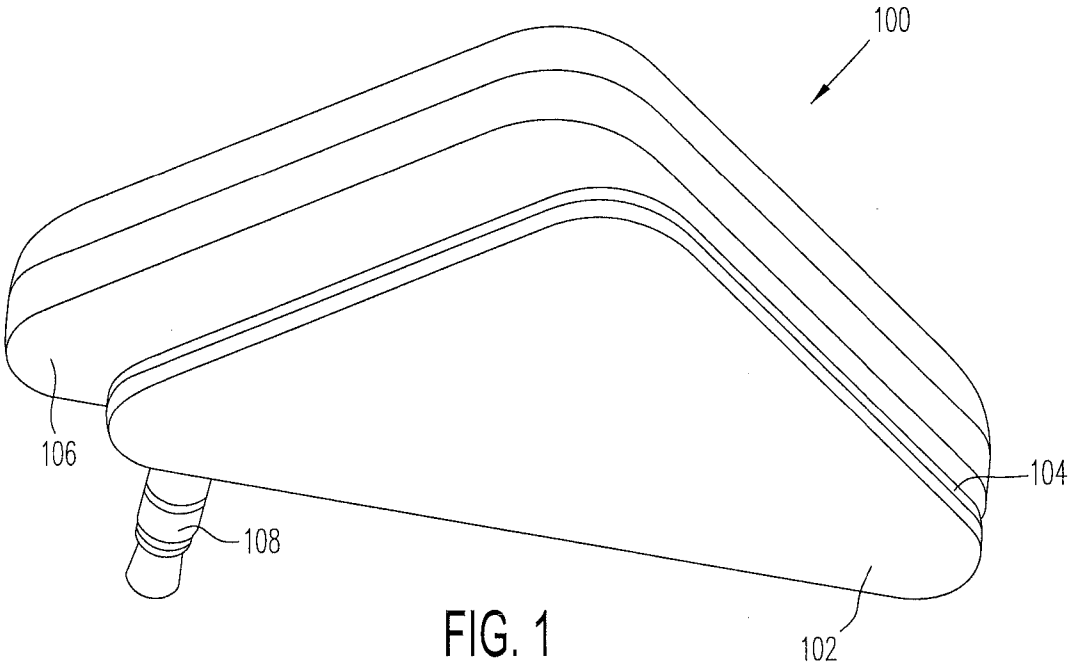

FIG. 1

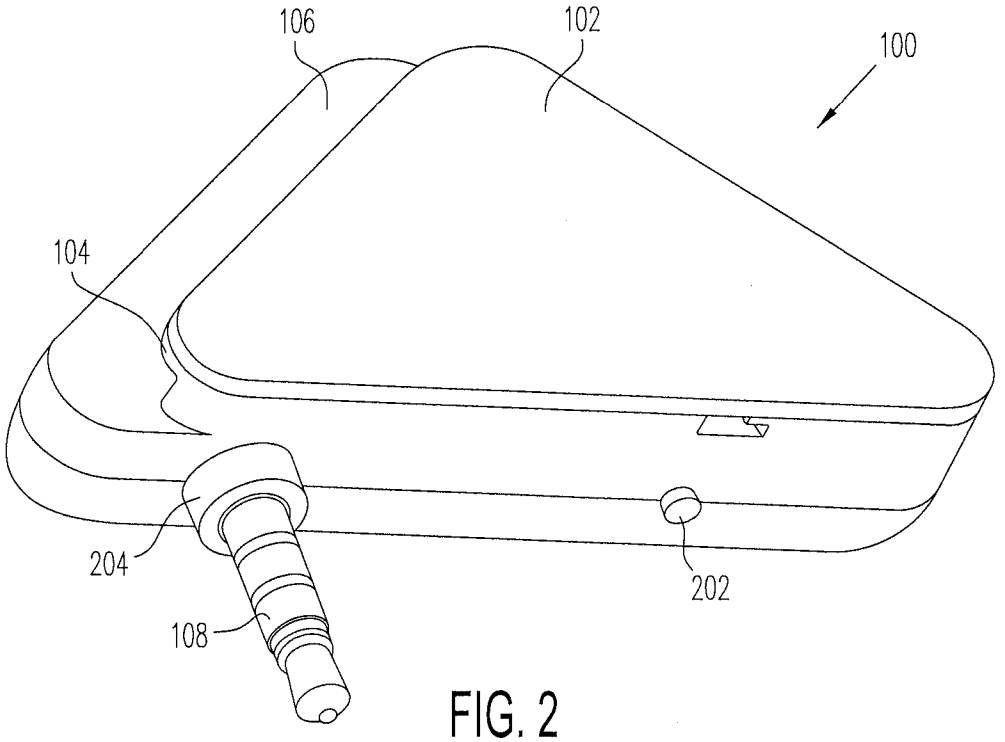

FIG. 2

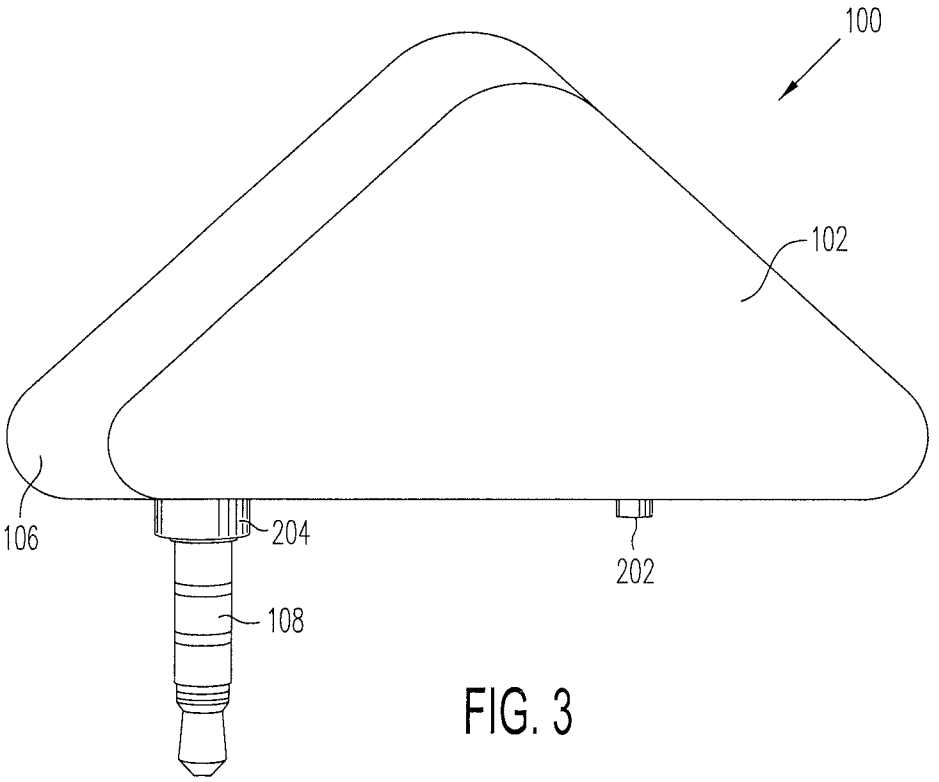

FIG. 3

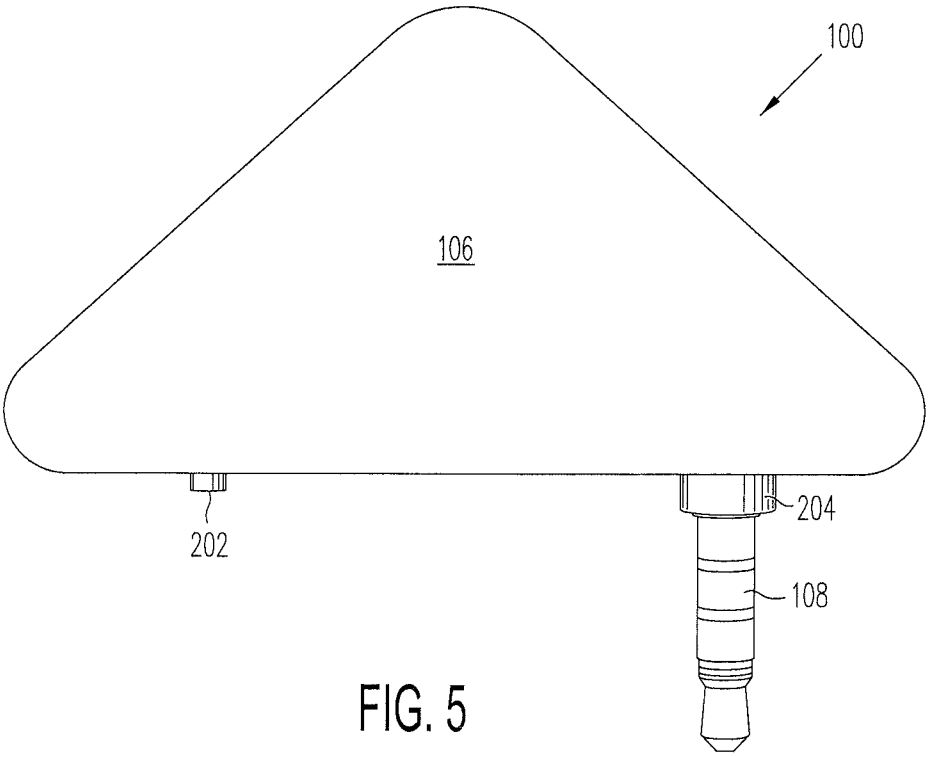

FIG. 5

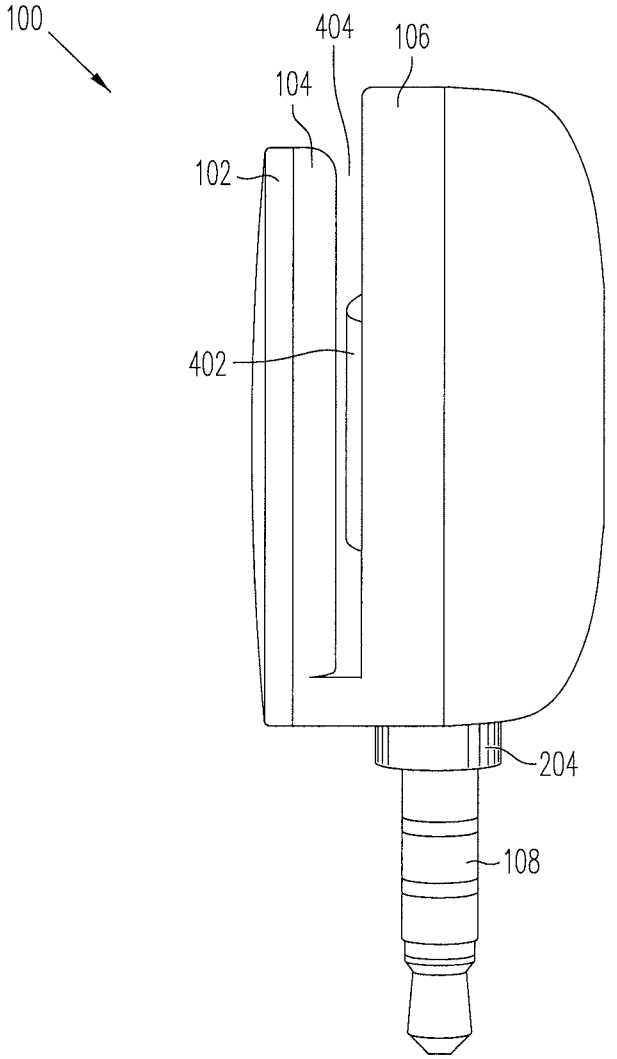

FIG. 4

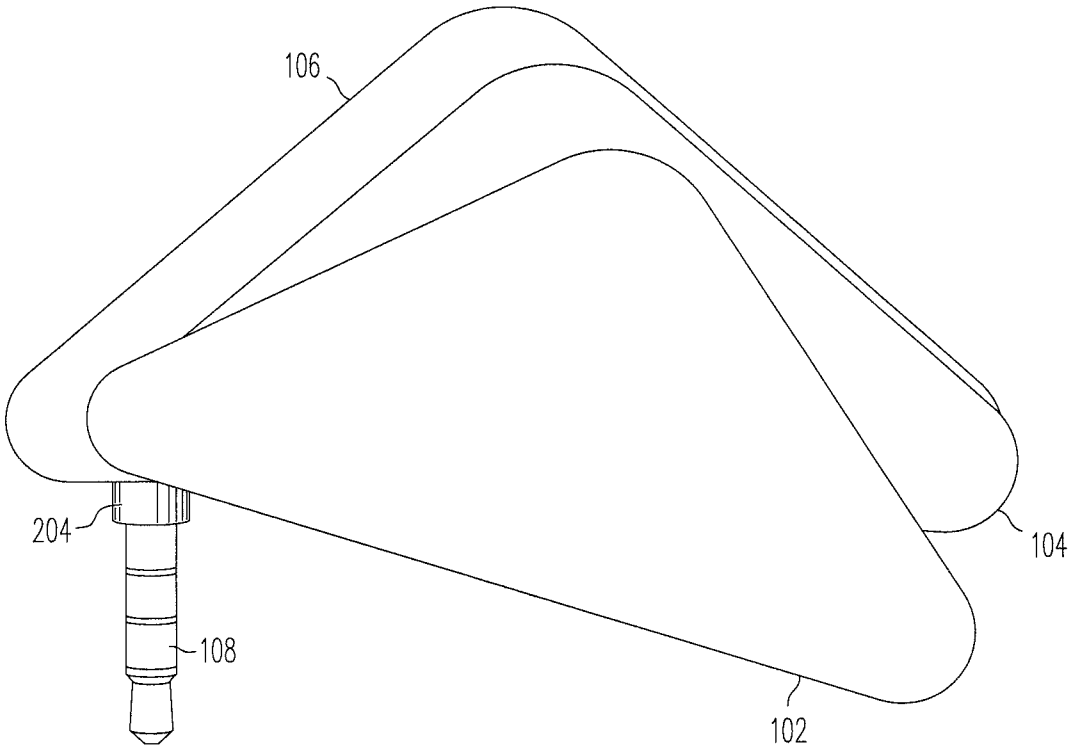

FIG. 6

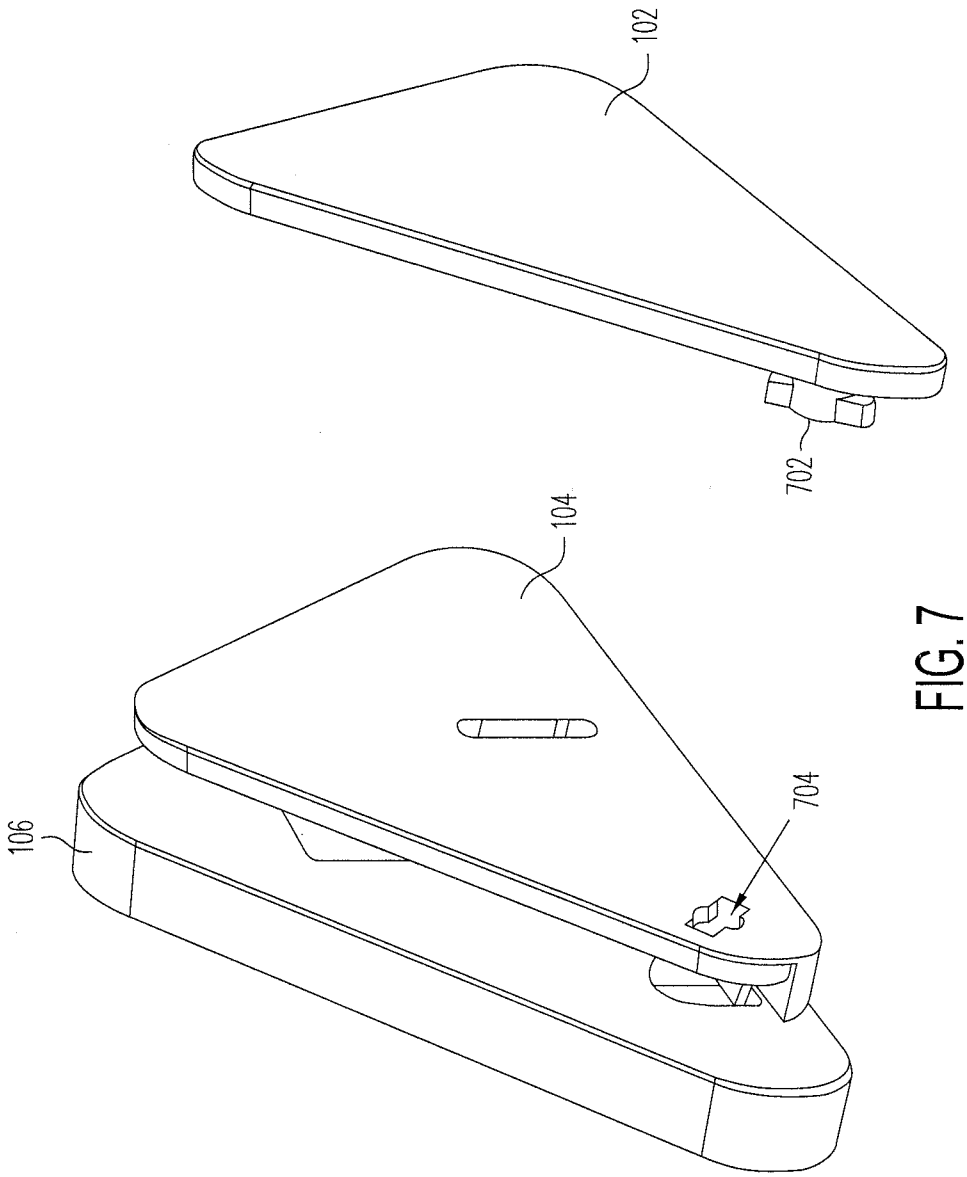

FIG. 7

CARD READER FOR MOBILE DEVICE

CROSS REFERENCE TO RELATED APPLICATION

This application is a continuation of U.S. patent application Ser. No. 13/959,531, filed Aug. 5, 2013, which is a continuation of U.S. patent application Ser. No. 13/421,502, filed Mar. 15, 2012, now U.S. Pat. No. 8,500,010, all of which are incorporated herein by reference in their entirety.

BACKGROUND

1. Field of the Invention

The present invention is related generally card readers and in particular to card readers for mobile devices.

2. Description of Related Art

Card readers, such as ones used to read credit cards, debit cards, and other types of cards, enable information to be quickly and easily communicated for processing. The information can be virtually anything that can be stored in a magnetic strip on the card. Cards with magnetic strips include room keys, driver licenses, reward cards, and, most commonly, payment or funding instrument cards, such as credit cards and debit cards.

Payment card readers enable a user to make a payment at a point of sale by simply swiping the card in the reader so that the magnetic strip is read by the reader, typically having the strip come in contact with a metal head in the reader. Information contained in the strip, such as card number, card holder name, etc., is electronically communicated to a payment processor, who can process the information and effect payment on behalf of the user to a payee, such as a merchant.

However, payment card readers are typically affixed to a merchant point of sale, such as at a checkout register or station. This restricts the uses of the payment card reader. Recently, Square has introduced a card reader for mobile devices to allow users to accept and make payments through their mobile devices. The Square card reader plugs into the audio port of an IOS device or other smart phone, so that a card can be swiped through the reader and the information communicated to the phone, which can then communicate the information to a payment processor.

Although the Square card reader now enables mobile devices to process card payments, it can be inconvenient to use, as the user needs to smoothly slide the card through the reader. Because the reader is simply plugged into a port, the reader can rotate when the card is slid through. This may require the user to hold the reader steady, while sliding the card. Since the reader is rotatable in the mobile device, the user may be required to hold both the mobile device and the reader at the same time. By simply holding the reader, the reader may be prone to disengage from the mobile device.

Therefore, there is a need for a card reader on a mobile device that overcomes the disadvantages of conventional mobile card readers discussed above.

SUMMARY

According to one embodiment of the present invention, a magnetic strip card reader for a mobile device has a face place that can be rotated when the reader is inserted into the mobile device such that the face plate extends over at least a portion of a front or rear face of the mobile device. Thus, when the card is slid through the reader, the rotatable reader face plate abuts against the mobile device face to prevent the card reader from rotating.

In one embodiment, the rotatable reader face plate is on the front of the reader so that the face plate can be rotated over the front of the mobile device and the card is swiped through the reader with the magnetic strip facing away from the front of the reader.

In other embodiments, the rotatable face plate is smaller in area than the card reader so that the user can more easily rotate the plate. A protrusion or foot along the bottom portion of the card reader may prevent the card reader from pressing against an on/off button of the mobile device. The card reader may also, or in the alternative, have a cylindrical protrusion on a bottom portion of the reader, where an output jack that is inserted into the device port extends from the cylindrical protrusion. The cylindrical protrusion may also prevent the reader from being inserted too far into the mobile device so that the reader does not accidentally turn off the mobile device by pressing against its on/off button.

As a result, a user can quickly and easily slide a card through the card reader without having to worry about the card reader rotating while the card is being slid.

These and other features and advantages of the present invention will be more readily apparent from the detailed description of the embodiments set forth below taken in conjunction with the accompanying drawings.

BRIEF DESCRIPTION OF THE DRAWINGS

FIG. **1** is a top perspective view of a mobile card reader according to one embodiment;

FIG. **2** is a bottom perspective view of the card reader of FIG. **1**;

FIG. **3** is a front view of the card reader of FIG. **1**;

FIG. **4** is a side view of the card reader of FIG. **1**;

FIG. **5** is a back view of the card reader of FIG. **1**;

FIG. **6** is a front view of the card reader of FIG. **1**, showing the front face plate rotated; and

FIG. **7** is an exploded view of a portion of the card reader of FIG. **1**.

Embodiments of the present disclosure and their advantages are best understood by referring to the detailed description that follows. It should be appreciated that like reference numerals are used to identify like elements illustrated in one or more of the figures, wherein showings therein are for purposes of illustrating embodiments of the present disclosure and not for purposes of limiting the same.

DETAILED DESCRIPTION

FIG. **1** is a top perspective view of a card reader **100** for use with a mobile device, such as a smart phone, computing tablet, or the like according to one embodiment. The shape of card reader **100** is triangular in this embodiment, although other shapes may also be suitable, such as square, rectangular, oval, etc. One advantage of a triangular shape is the conservation of material. The base of card reader **100** needs to be long enough to adequately slide and read the magnetic strip card, but that same length need not extend beyond the base or bottom portion. Card reader **100** includes a rotatable front face plate **102**, a stationary front face plate **104**, a stationary back plate **106**, and an output plug or jack **108**. Output jack **108** inserts into a port, such as an audio input port of a smart phone, of the mobile device to enable communication from the card reader to the mobile device. As seen from FIG. **1**, both rotatable front face plate **102** and

stationary front face plate **104** are the same size and smaller in area than back plate **106**. However, size dimensions and relative sizes may be suitable, such as rotatable front face plate **102** being smaller in size than stationary front face plate **104**. Rotatable front face plate **102** is separated from stationary front face plate **104** by the dotted line.

FIG. **2** is a bottom perspective view of card reader **100**, which shows a protrusion or foot **202** extending from a bottom portion of card reader **100** according to one embodiment. Foot **202** can be located on any suitable bottom portion and should be tall enough so that when card reader **100** is inserted into a mobile device, the bottom surface of card reader **100** does not press an on/off button on the mobile device. In one embodiment, the height of foot **202** is greater than the height of the highest on/off button on a compatible mobile device. This will then allow the reader to be used on all compatible devices so that foot **202** prevents the reader from pressing the on/off button on all compatible devices. Foot **202** should be placed on card reader **100** so that foot **202** does not overlap the on/off button of all compatible mobile devices.

Card reader of FIG. **2** also has a cylindrical housing **204** from which output jack **108** extends. Cylindrical housing **204** may have a same or similar function as foot **202**, i.e., preventing the bottom of card reader **100** from pressing an on/off button on the mobile device when output jack **108** is inserted into the mobile device. Note that housing **204** need not be cylindrical and can be other shapes as desired. The height of housing **204** can be determined based on the same or similar considerations as to the height of foot **202** discussed above, with a limitation that the height of housing **204** should be greater than the height of foot **202**. If that is not the case (i.e., the height of foot **202** is greater), output jack **108** may not be able to be fully engaged with a port of the mobile device. In different embodiments, both housing **204** and foot **202** are present, only foot **202** is present, or only housing **204** is present. One advantage of having both housing **204** and foot **202** present is that the foot **202** may prevent card reader **100** from being pressed downward at an angle to press the on/off button even with housing **204** present on one side of the card reader.

FIG. **3** is a front view of card reader **100**, which shows rotatable front face plate **102** covering the stationary front face plate. FIG. **5** is a back view of card reader **100**. In this embodiment, both front face plates are the same size and align with each other. Both front face plates are offset from stationary back plate **106**, which can make it easier for the user to slide a card through reader **100** and for the user to rotate front face plate **102**.

FIG. **4** is a side view of card reader **100** showing a magnetic strip head or reader **402** within a slot **404**. Slot **404** is between stationary back plate **106** and stationary front face **104**. A magnetic strip card can be inserted into slot **404** and slid across head **402** such that the magnetic strip comes in contact with head **402**. To ensure a proper reading of the card, the card typically has to be moved smoothly through the reader with sufficient contact to head **402**. Rotatable front face plate **102** can be rotated downward so that at least a portion of the inner surface of plate **102** extends over at least a portion of a front or back surface of the mobile device. This prevents reader **100** from rotating if the user is pressing the card against head **402** during a swipe.

FIG. **6** is a front view of card reader **100**, where rotatable front face plate **102** is rotated downward so that front face plate **102** no longer coincides with stationary front face plate **104**. The portion now extending below the bottom surface of reader **100** would now overlap a portion of a front or back surface of the mobile device. Thus, if reader **100** is pushed backward, such as through the user swiping a card against stationary back plate **106**, the extended lower portion of rotatable front face plate **102** can engage with the mobile device surface to prevent card reader **100** from rotating or spinning about plug **108**.

FIG. **7** is an exploded view of a portion of card reader **100**. In this view, only rotatable front face plate **102**, stationary front face plate **104**, and stationary back plate **106** are shown. Rotatable front face plate **102** includes a protrusion **702** that fits into a recess **704** in stationary front face plate **104**. This allows rotatable front face plate **102** to rotate, while still being secured to stationary front face plate **104**. Other ways to allow plate **102** to be secured to plate **104** and to rotate may also be suitable. In one embodiment, stationary front face plate **104** and stationary back plate **106** form a unitary structure made of plastic or other suitable material.

The size of reader **100** can vary, with a minimum length dependent on what would be needed to be able to properly read a magnetic strip card. A typical size should be less than or equal to the width of a standard smart phone; however, larger sizes may also be suitable. Smaller sizes may be desirable, since the user would have to carry the reader to use with the mobile device.

Thus, embodiments of the mobile card reader described herein enable a user to quickly and easily read a magnetic strip card using a mobile device without the card reader accidentally turning off the device or rotating/spinning while attempting to read the card.

The foregoing disclosure is not intended to limit the present disclosure to the precise forms or particular fields of use disclosed. As such, it is contemplated that various alternate embodiments and/or modifications to the present disclosure, whether explicitly described or implied herein, are possible in light of the disclosure. Having thus described embodiments of the present disclosure, persons of ordinary skill in the art will recognize that changes may be made in form and detail without departing from the scope of the present disclosure.

What is claimed is:

1. A card reader comprising:

a body having a slot configured to receive a card;

a protrusion extending from a first bottom portion of the body, wherein the protrusion extends at least a height of an on/off button of a mobile device, abuts against a surface on which the on/off button extends from on the mobile device when the card reader is inserted into the mobile device, and does not overlap the on/off button when the card reader is inserted into the mobile device; and

a jack extending from a second bottom portion of the body, the jack being located a lateral distance away from the protrusion.

2. The card reader of claim **1**, further comprising a housing extending from the second bottom portion of the body, wherein the jack extends through the housing.

3. The card reader of claim **2**, wherein a height of the housing is greater than a height of the protrusion.

4. The card reader of claim **1**, wherein the card is a magnetic strip card.

5. The card reader of claim **1**, further comprising a read head located within the slot.

6. The card reader of claim **1**, wherein the body is a triangular shape.

7. The card reader of claim **1**, wherein the body is a square shape.

8. The card reader of claim **1**, wherein the body is a rectangular shape.

9. The card reader of claim **1**, wherein a width of the body is less than or equal to a width of the mobile device.

10. The card reader of claim **1**, wherein the mobile device is a smart phone.

11. A card reader for a mobile device, comprising:

a body having a slot configured to receive a card;

a protrusion extending from a first bottom portion of the body, wherein the protrusion extends at least a height of an on/off button of a mobile device, abuts against a surface on which the on/off button extends from on the mobile device when the card reader is inserted into the mobile device, and does not overlap the on/off button when the card reader is inserted into the mobile device;

a jack extending from a second bottom portion of the body, the jack being located a lateral distance away from the protrusion; and

a housing extending from the second bottom portion of the body, wherein the jack extends through the housing.

12. The card reader of claim **11**, wherein the card is a magnetic strip card.

13. The card reader of claim **11**, wherein the body is a triangular shape.

14. The card reader of claim **11**, wherein the body is a square shape.

15. The card reader of claim **11**, wherein the body is a rectangular shape.

16. The card reader of claim **11**, wherein a height of the housing is greater than a height of the protrusion.

17. The card reader of claim **11**, wherein a width of the body is less than or equal to a width of the mobile device.

18. The card reader of claim **11**, wherein the mobile device is a smart phone.

19. A method of operating a card reader with a mobile device, the method comprising:

inserting the card reader into the mobile device using a jack on the card reader, wherein the jack extends from a first bottom portion of the card reader;

contacting a first portion of a side surface of the mobile device with a protrusion on the card reader before the card reader contacts an on/off button on a second portion of the side surface of the mobile device, wherein the protrusion extends from a second bottom portion of the card reader and the jack is located a lateral distance away from the protrusion; and

swiping a card through the card reader.

20. The method of claim **19**, further comprising contacting a third portion of the side surface of the mobile device with a housing extending through the jack.

* * * * *