US008302860B2

(12) **United States Patent**
McKelvey

(10) **Patent No.: US 8,302,860 B2**
(45) **Date of Patent: *Nov. 6, 2012**

(54) **READ HEAD DEVICE WITH NARROW CARD READING SLOT**

(75) Inventor: **Jim McKelvey**, Pensacola, FL (US)

(73) Assignee: **Square, Inc.**, San Francisco, CA (US)

(*) Notice: Subject to any disclaimer, the term of this patent is extended or adjusted under 35 U.S.C. 154(b) by 0 days.

This patent is subject to a terminal disclaimer.

(21) Appl. No.: **13/043,268**

(22) Filed: **Mar. 8, 2011**

(65) **Prior Publication Data**

US 2012/0095869 A1 Apr. 19, 2012

Related U.S. Application Data

(63) Continuation-in-part of application No. 12/903,753, filed on Oct. 13, 2010, and a continuation-in-part of application No. 13/012,495, filed on Jan. 24, 2011, and a continuation-in-part of application No. 13/010,796, filed on Jan. 21, 2011, now abandoned, and a continuation-in-part of application No. 13/005,822, filed on Jan. 13, 2011, and a continuation-in-part of application No. 12/985,982, filed on Jan. 6, 2011, and a continuation-in-part of application No. 12/903,823, filed on Oct. 13, 2010.

(51) **Int. Cl.**

G06K 5/00	(2006.01)
G06K 7/08	(2006.01)
G06K 7/00	(2006.01)
G06F 7/08	(2006.01)
G06F 17/00	(2006.01)

(52) **U.S. Cl.** **235/380**; 235/375; 235/381; 235/435; 235/439; 235/449

(58) **Field of Classification Search** 235/375, 235/380–382, 435, 439, 449, 492; 455/556.1, 455/556.2, 557

See application file for complete search history.

(56) **References Cited**

U.S. PATENT DOCUMENTS

4,035,614 A 7/1977 Frattarola et al.

(Continued)

FOREIGN PATENT DOCUMENTS

JP 2004078662 A 3/2004

(Continued)

OTHER PUBLICATIONS

"Reading magnetic cards (almost) for free" by Sébastien Bourdeauducq ("Lekernel"), posted on Jan. 26, 2009 at http://lekernel.net/blog/?p=12.

(Continued)

Primary Examiner — Thien M Le
Assistant Examiner — April Taylor
(74) *Attorney, Agent, or Firm* — Paul Davis; Goodwin Procter LLP

(57) **ABSTRACT**

A read head is positioned in a housing and configured to be coupled to a mobile device. The read head has a slot for swiping a magnetic stripe of a financial transaction card. The slot is utilized to complete a financial transaction between a buyer and seller. The read head reads data on the magnetic stripe and produces a signal indicative of data stored on the magnetic stripe. The read head device includes an output jack adapted to be inserted at least one of the audio jack or microphone input port of a mobile appliance for providing a signal indicative of data stored on the magnetic stripe to the mobile device. The slot is configured to maintain contact between the read head and the magnetic stripe of the financial transaction card during a swipe and decoding of the signal is performed in the mobile device. The decoding includes determining pulses in the signal and converting at least some of the pulses to characters.

1 Claim, 21 Drawing Sheets

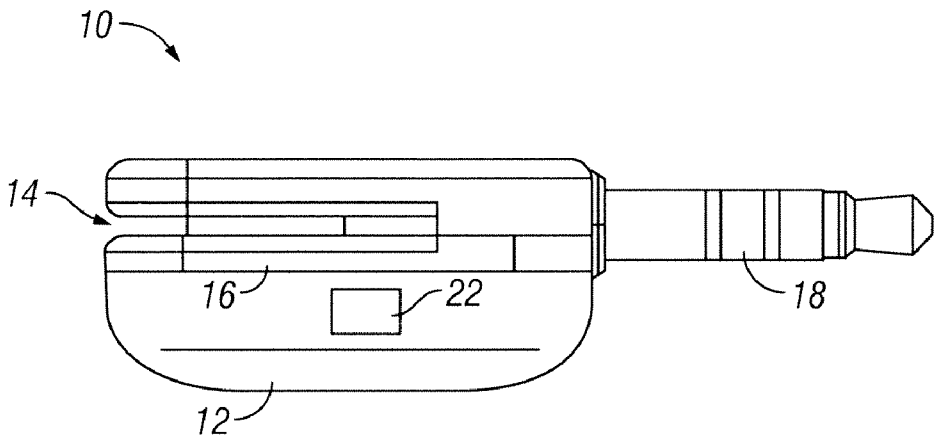

U.S. PATENT DOCUMENTS

4,254,441	A	3/1981	Fisher	
4,591,937	A *	5/1986	Nakarai et al.	360/101
4,609,957	A	9/1986	Gentet et al.	
4,845,740	A	7/1989	Tokuyama et al.	
5,434,400	A	7/1995	Scherzer	
5,603,078	A	2/1997	Henderson et al.	
5,729,591	A *	3/1998	Bailey	455/558
5,764,742	A	6/1998	Howard et al.	
5,850,599	A	12/1998	Seiderman	
5,878,337	A	3/1999	Joao et al.	
6,006,109	A	12/1999	Shin	
6,129,277	A	10/2000	Grant et al.	
6,234,389	B1	5/2001	Valliani et al.	
6,308,227	B1 *	10/2001	Kumar et al.	710/4
6,431,445	B1	8/2002	DeLand et al.	
6,476,743	B1	11/2002	Brown et al.	
6,481,623	B1	11/2002	Grant et al.	
6,497,368	B1 *	12/2002	Friend et al.	235/472.01
6,536,670	B1	3/2003	Postman et al.	
6,579,728	B2	6/2003	Grant et al.	
6,612,488	B2	9/2003	Suzuki	
6,813,608	B1	11/2004	Baranowski	
6,832,721	B2	12/2004	Fujii	
6,850,147	B2	2/2005	Prokoski et al.	
6,868,391	B1	3/2005	Hultgren	
6,896,182	B2	5/2005	Sakaguchi	
6,944,782	B2	9/2005	von Mueller et al.	
7,003,316	B1	2/2006	Elias et al.	
7,013,149	B2	3/2006	Vetro et al.	
7,149,296	B2	12/2006	Brown et al.	
7,163,148	B2 *	1/2007	Durbin et al.	235/449
7,167,711	B1	1/2007	Dennis	
7,918,394	B1	4/2007	Morley, Jr.	
7,252,232	B2	8/2007	Fernandes et al.	
7,309,012	B2	12/2007	Von Mueller et al.	
7,324,836	B2	1/2008	Steenstra et al.	
7,363,054	B2	4/2008	Elias et al.	
7,409,234	B2	8/2008	Glezerman	
7,433,452	B2	10/2008	Taylor et al.	
7,505,762	B2	3/2009	Onyon et al.	
7,581,678	B2	9/2009	Narendra et al.	
7,708,189	B1	5/2010	Cipriano	
7,810,729	B2	10/2010	Morley, Jr.	
7,896,248	B2	3/2011	Morley, Jr.	
2001/0001856	A1	5/2001	Gould et al.	
2002/0002507	A1	1/2002	Hatakeyama	
2002/0030871	A1	3/2002	Anderson et al.	
2002/0077974	A1 *	6/2002	Ortiz	705/39
2002/0099648	A1	7/2002	DeVoe et al.	
2002/0108062	A1	8/2002	Nakajima et al.	
2002/0169541	A1	11/2002	Bouve et al.	
2002/0188535	A1	12/2002	Chao et al.	
2003/0135463	A1	7/2003	Brown et al.	
2003/0144040	A1	7/2003	Liu	
2004/0012875	A1 *	1/2004	Wood	360/55
2004/0041911	A1 *	3/2004	Odagiri et al.	348/207.1
2004/0058705	A1 *	3/2004	Morgan et al.	455/556.1
2004/0087339	A1	5/2004	Goldthwaite et al.	
2004/0093496	A1	5/2004	Colnot	
2004/0104268	A1	6/2004	Bailey	
2004/0127256	A1	7/2004	Goldthwaite et al.	
2004/0204074	A1	10/2004	Desai	
2005/0077870	A1	4/2005	Ha et al.	
2005/0209719	A1	9/2005	Beckert et al.	
2005/0236480	A1 *	10/2005	Vrotsos et al.	235/439
2005/0242173	A1 *	11/2005	Suzuki	235/380
2005/0247787	A1	11/2005	Von Mueller et al.	
2006/0049256	A1	3/2006	Von Mueller et al.	
2006/0094481	A1	5/2006	Gullickson	
2006/0122902	A1	6/2006	Petrov et al.	
2006/0208066	A1	9/2006	Finn et al.	
2006/0223580	A1	10/2006	Antonio et al.	
2006/0234771	A1	10/2006	Shavrov	
2007/0067833	A1	3/2007	Colnot	
2007/0100651	A1	5/2007	Ramer et al.	
2007/0124211	A1	5/2007	Smith	
2007/0221728	A1	9/2007	Ferro et al.	
2007/0244811	A1	10/2007	Tumminaro	
2007/0250623	A1	10/2007	Hickey et al.	
2007/0255620	A1	11/2007	Tumminaro et al.	
2007/0255653	A1	11/2007	Tumminaro et al.	
2008/0027815	A1	1/2008	Johnson et al.	
2008/0040265	A1	2/2008	Rackley, III et al.	
2008/0059370	A1	3/2008	Sada et al.	
2008/0059375	A1	3/2008	Abifaker	
2008/0103972	A1	5/2008	Lanc	
2008/0147564	A1	6/2008	Singhal	
2008/0172306	A1	7/2008	Schorr et al.	
2008/0177662	A1	7/2008	Smith et al.	
2008/0208762	A1	8/2008	Arthur et al.	
2008/0275779	A1	11/2008	Lakshminarayanan	
2009/0100168	A1	4/2009	Harris	
2009/0104920	A1	4/2009	Moon et al.	
2009/0117883	A1	5/2009	Coffing et al.	
2009/0119190	A1	5/2009	Realini	
2009/0125429	A1	5/2009	Takayama	
2009/0144161	A1	6/2009	Fisher	
2009/0159681	A1	6/2009	Mullen et al.	
2009/0187492	A1	7/2009	Hammad et al.	
2010/0108762	A1	5/2010	Morley, Jr.	
2010/0191653	A1 *	7/2010	Johnson et al.	705/72
2010/0222000	A1 *	9/2010	Sauer et al.	455/41.2
2010/0243732	A1	9/2010	Wallner	
2011/0174879	A1 *	7/2011	Morley, Jr.	235/449
2011/0180601	A1 *	7/2011	Morley, Jr.	235/449
2011/0202463	A1 *	8/2011	Powell	705/44
2011/0259957	A1 *	10/2011	Tsai	235/380
2012/0008851	A1 *	1/2012	Pennock et al.	382/140
2012/0012653	A1 *	1/2012	Johnson et al.	235/380

FOREIGN PATENT DOCUMENTS

JP	2005269172	A	9/2005
WO	WO2010097711	A2	9/2010
WO	WO2010111130	A2	9/2010

OTHER PUBLICATIONS

"MSR500EX (Mini123EX) Portable Magnetic Stripe Card Reader" by Tyner ("Tyner"), posted on Apr. 27, 2007 at http://www.tyner.com/magnetic/msr500ex.htm.

"Turning your mobile into a magnetic stripe reader" by Luis Padilla Visdómine ("Padilla I"), dated Aug. 30, 2004.

"Magnetic stripe reader circuit" ("Padilla II") dated Jan. 28, 1997, Luis Padilla Visdómine.

"The simplest magnetic stripe reader", posting from www.gae.ucm.esi~padilla/extrawork/soundtrack.html dated Jan. 27, 2003, Luis Padilla Visdómine.

"Travel industry targeted for Palm PDA card reader" http://www.m-travel.com/news/2001/08/travel_industry.html, dated Aug. 22, 2001.

"Semtek to target healthcare with HandEra PDAs and PDA swipe card reader", http://www.pdacortex.com/semtek.htm, dated Aug. 29, 2001.

"Semtek 3913 Insert Magentic Card Reader 20 Pin Serial RS232" product description, RecycledGoods.com, Apr. 19, 2011.

"Credit Card Swiper and Reader for iPhone, iPad, Blackberry, Android and more", http://hubpages.com/hub/Credit-Card-Swiper-and-Reader-for-iPhone-iPad-Blackberry-An..., accessed Apr. 20, 2011.

"ROAMpay is like Square for Blackberry (Plus Android, iOS and Desktops)" by John Paul Titlow, Dec. 1, 2010; http://www.readwriteweb.com/biz/2010/12/roampay-is-like-square-for-bla.php.

"Use a cellphone as a magnetic card reader", Apr. 15, 2005, by Vince Veneziani, http://hackaday.com/2005/04/15/use-a-cellphone-as-a-magnetic-card....

"Merchants eye mobile phones to transact card payments", by Amy E. Buttell, Feb. 3, 2010, http://www.merchantaccountguide.com/merchant-account-news/cell-phone-credit-card-mer....

Online shopping page for "USB Magnetic Stripe Credit/Card Track-2 Reader and Writer (75/210BPI)", Deal Extreme (dealextreme.com), Nov. 15, 2008.

Online shopping page for "Mophie Marketplace Magnetic Strip Reader/Case for iPhone 3G & 3GS—Grey", J&R (JR.com), accessed Feb. 8, 2011.

Online shopping page for "Barcode scanner and Magnetic Stripe Reader (MSR) for Pocke..", Tom's Hardware (tomshardware.com), accessed Feb. 8, 2011.
"A Magnetic Stripe Reader—Read Credit Cards & Driver Licences!", Articlesbase (articlesbase.com), Sep. 7, 2009.
"U.S. Credit Cards to get a high-tech makeover", by Roland Jones, Oct. 22, 2010, http://lifeinc.today.com/_news/2010/10/22/5334208-us-credit-cards-to-get-a-high-tech-mak....
"Arduino magnetic stripe decoder", Instructables, Feb. 8, 2011, http://www.instructables.com/id/Arduino-magnetic-stripe-decorder/.
Online shopping page for "Magnetic Stripe Reader (MSR) MSR7000-100R", Motorola Solutions, accessed Feb. 8, 2011, http://www.motorola.com/business/US-EN/MSR7000-100R_US-EN.do?vgnextoid=164fc3....
Pay@PC, http://www.merchantanywhere.com/PAY_AT_PCT@PC.htm, accessed Feb. 11, 2011.
"Get paid on the spot from your mobile phone", http://payments.intuit.com/products/basic-payment-solutions/mobile-credit-card-processin.., accessed Feb. 11, 2011.
"Touch-Pay Wireless Credit Card Processing", MerchantSeek, http://www.merchantseek.com/wireless-credit-card-processing.htm, accessed Feb. 11, 2011.
"Announcement: Semtek Introduces Side Swipe II Card Reader for Wireless Devices", Brighthand, http://forum.brighthand.com/pdas-handhelds/173285-announcement-semtek-introduces-sid..., accessed Apr. 19, 2011.
vTerminal Credit Card Processing App for AuthorizeNet and PayPal Payflow Pro for Curve 8350 8500 8900 and Bold 9000, by Dr. Knox Grandison; https://appworld.blackberry.com/webstore/content/3374, accessed Apr. 20, 2011.
"Magnetic Stripe Card Spoofer" by Adam Harris, Aug. 4, 2008, http://hackaday.com/2008/08/04/magnetic-stripe-card-spoofer/.
Website page snapshot for "Headphone Jack (3.5mm)", http://www.phonescoop.com/glossary/term.php?gid=440, accessed May 5, 2011.
Website page snapshot for "2.5mm Headset Jack", http://www.phonescoop.com/glossary/term.php?gid=360, accessed May 5, 2011.
"Reference Designations for Electrical and Electronics Parts and Equipment, Engineering Drawing and Related Documentation Practices", The American Society of Mechanical Engineers, Nov. 21, 2008.
"Magstripe Interfacing—A Lost Art" by Acidus, http://www.scribd.com/doc/18236182/Magstripe-Interfacing#open_..., accessed Feb. 7, 2011.
"Mag-stripe readers the hunt for a homebrew mag-stripe reader that'll work with modern", posted Jan. 21, 2009, http://www.hak5.org/forums/index.php?showtopic=11563&st=20.
"Hijacking Power and Bandwidth from the Mobile Phone's Audio Interface", Ye-Sheng Kuo, Sonal Verma, Thomas Schmid, and Prabal Dutta, Dec. 17, 2010.
Website: www.alexwinston.com, Aug. 31, 2009.
"Magnetic Card Reader", accessed Apr. 25, 2011, http://lekernel.net/scrapbook/old/cardreader.html.
"Magnetic stripe reader/writer" http://www.gae.ucm.es/~padilla/extrawork/stripe.html, Oct. 29, 1996.
Two-Pass Authenticated Encryption Faster than Generic Composition, S. Lucks, University of Mannheim, Germany; http://th/informatic-uni-mannheim/de/people/lucks/, 2005.
Comparing Block Cipher Modes of Operation on MICAz Sensor Nodes, G. Bauer et al., Institute for Applied Information Processing and Communications, Gran University of Technology, 2009.

* cited by examiner

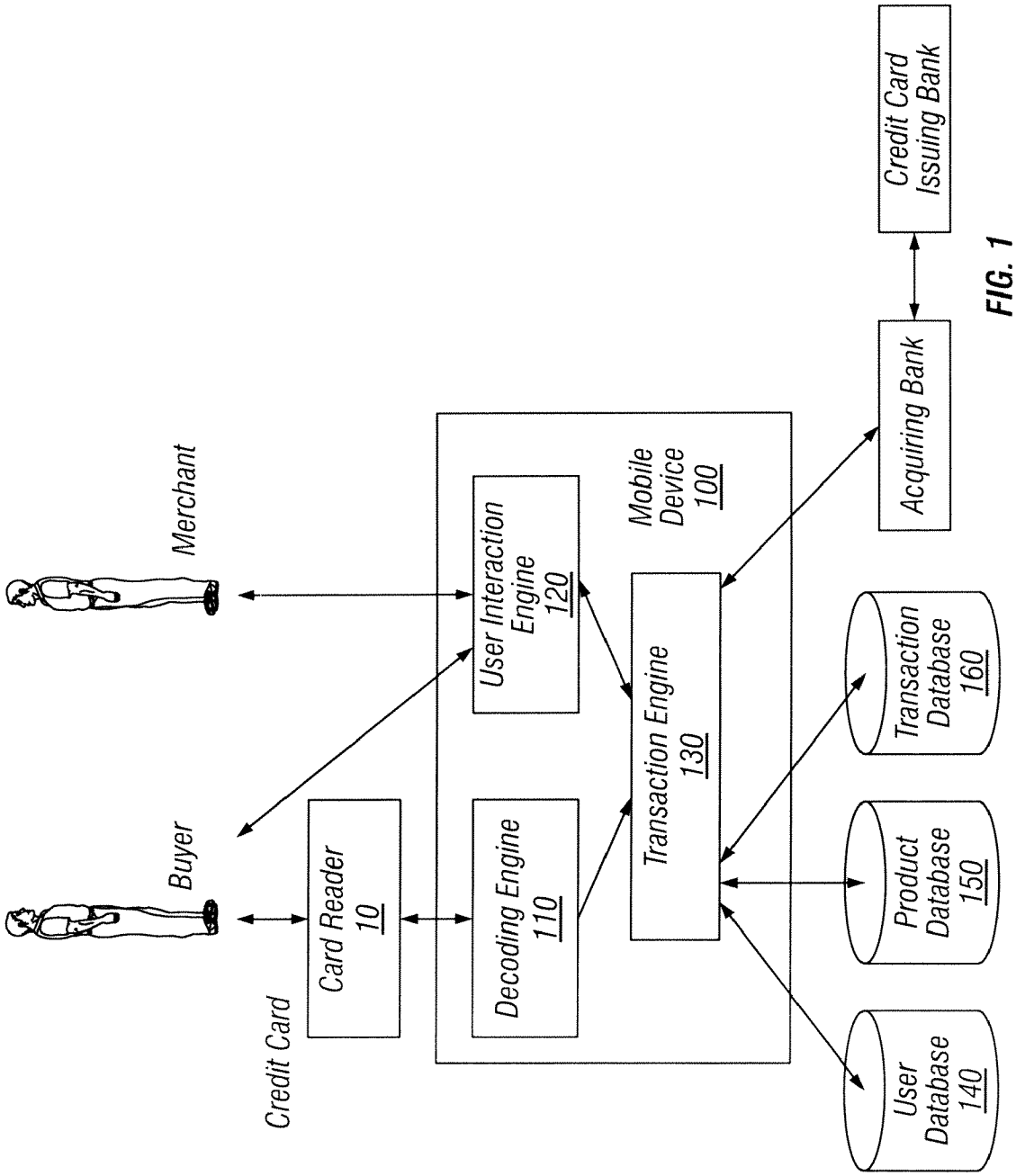
Credit Card
Issuing Bank
Acquiring Bank
Merchant
Buyer
Credit Card
Card Reader
10
Mobile
Device
100
User Interaction
Engine
120
Decoding Engine
110
Transaction Engine
130
Transaction
Database
160
Product
Database
150
User
Database
140

FIG. 1

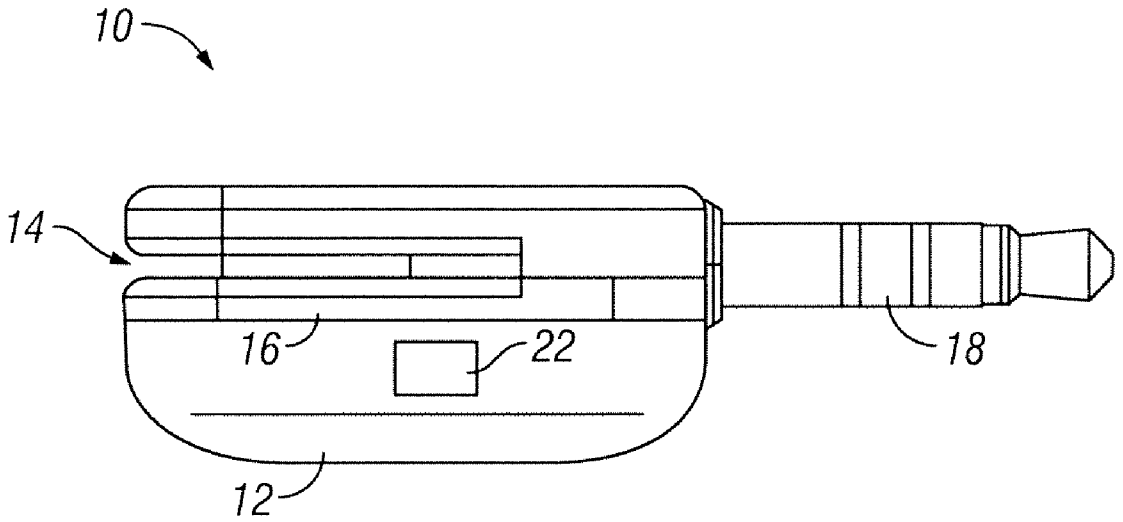

FIG. 2

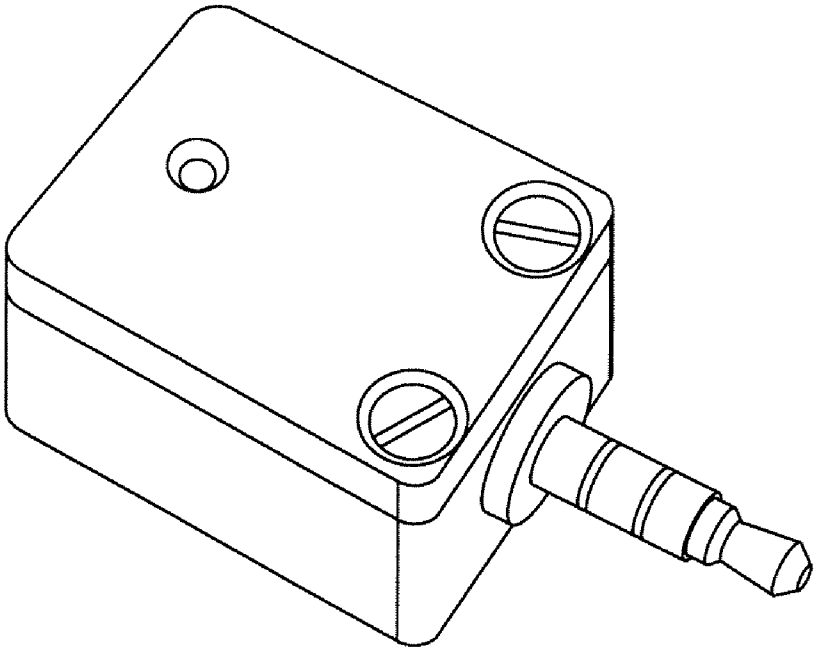

FIG. 3A

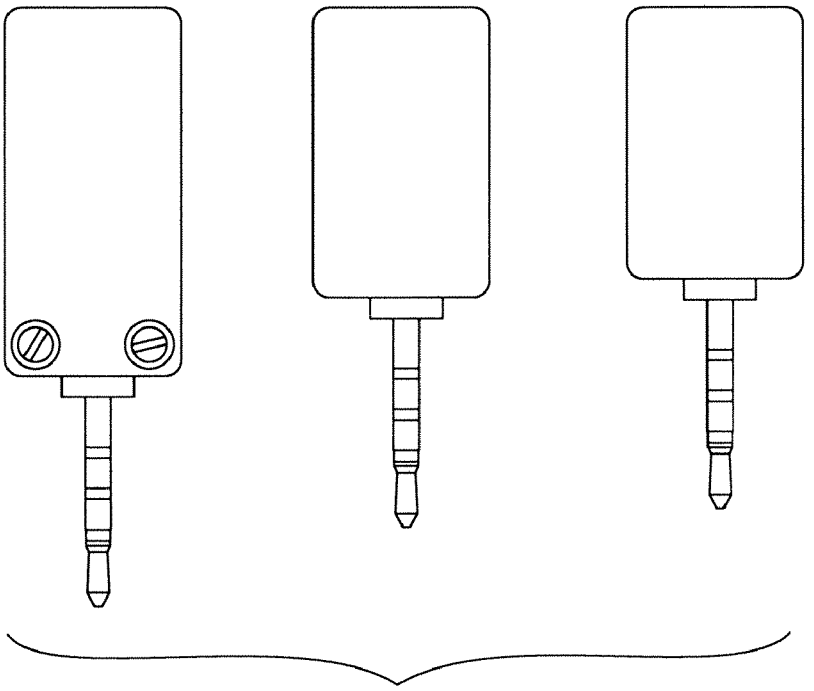

FIG. 3B

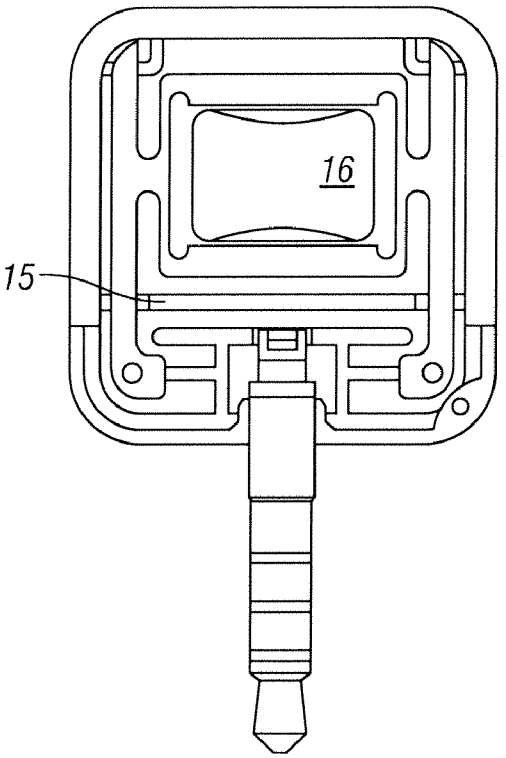

FIG. 4A

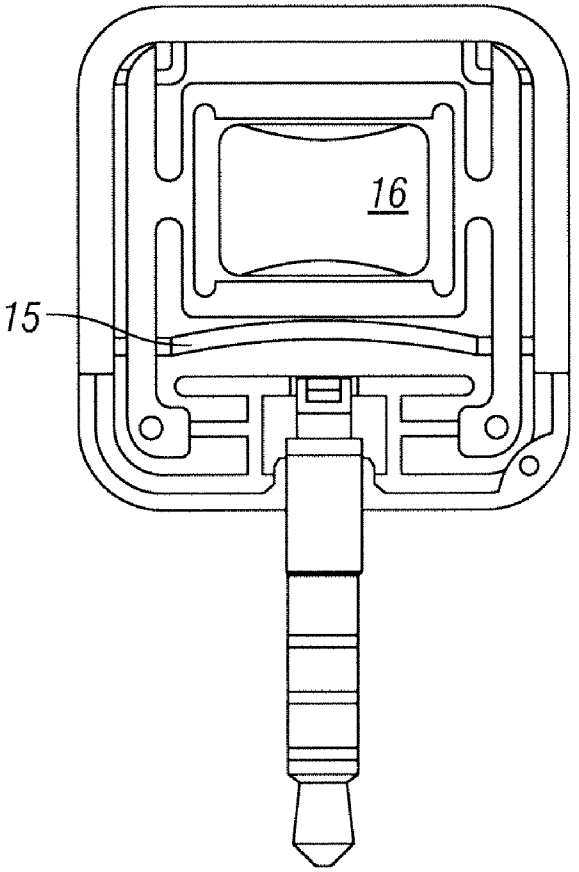

FIG. 4B

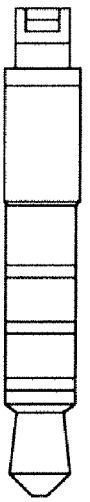

FIG. 5

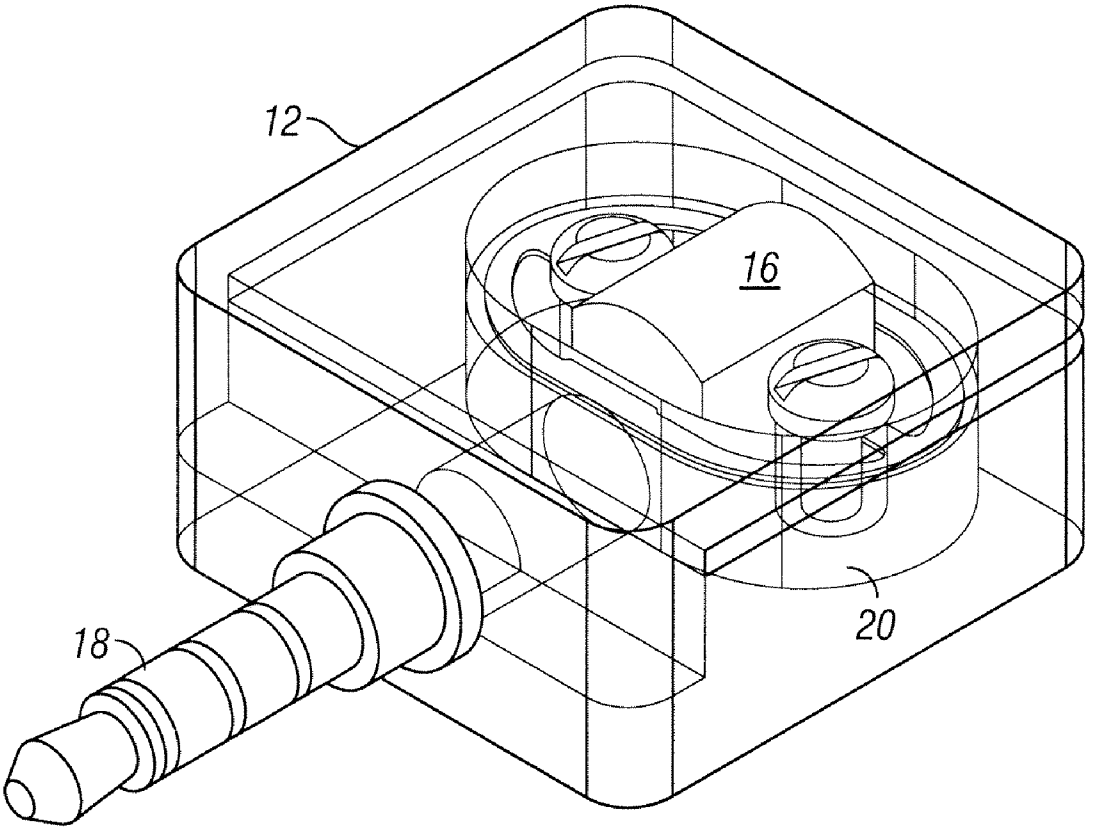

FIG. 6A

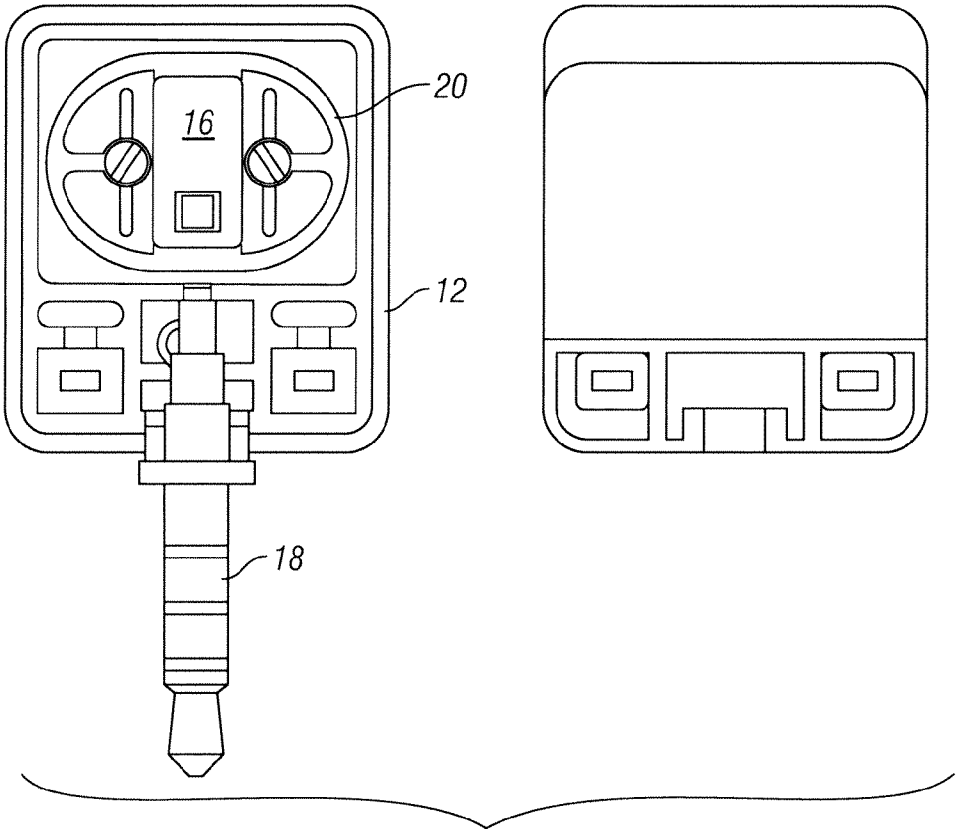

FIG. 6B

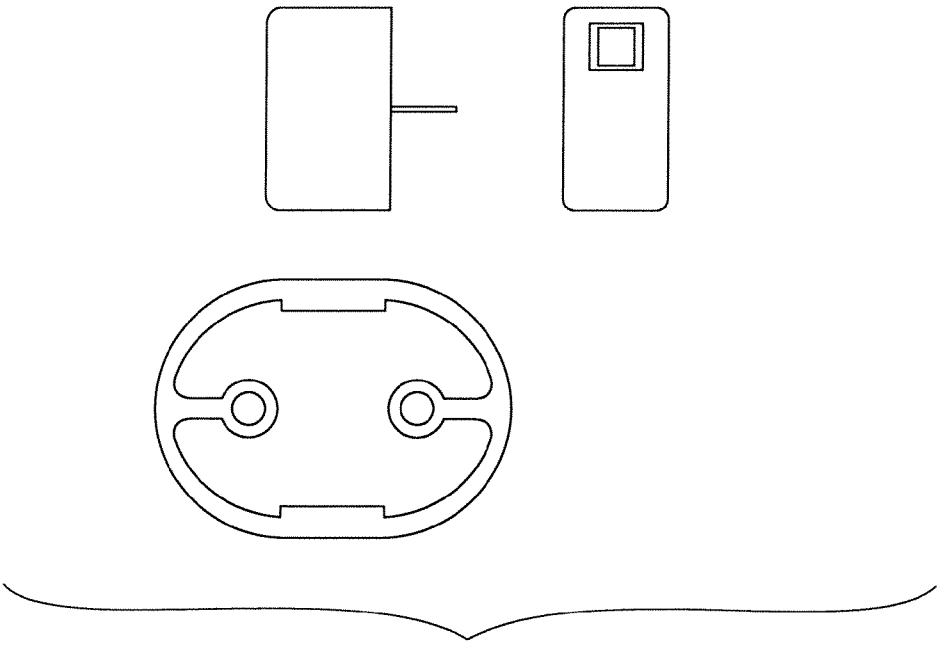

FIG. 6C

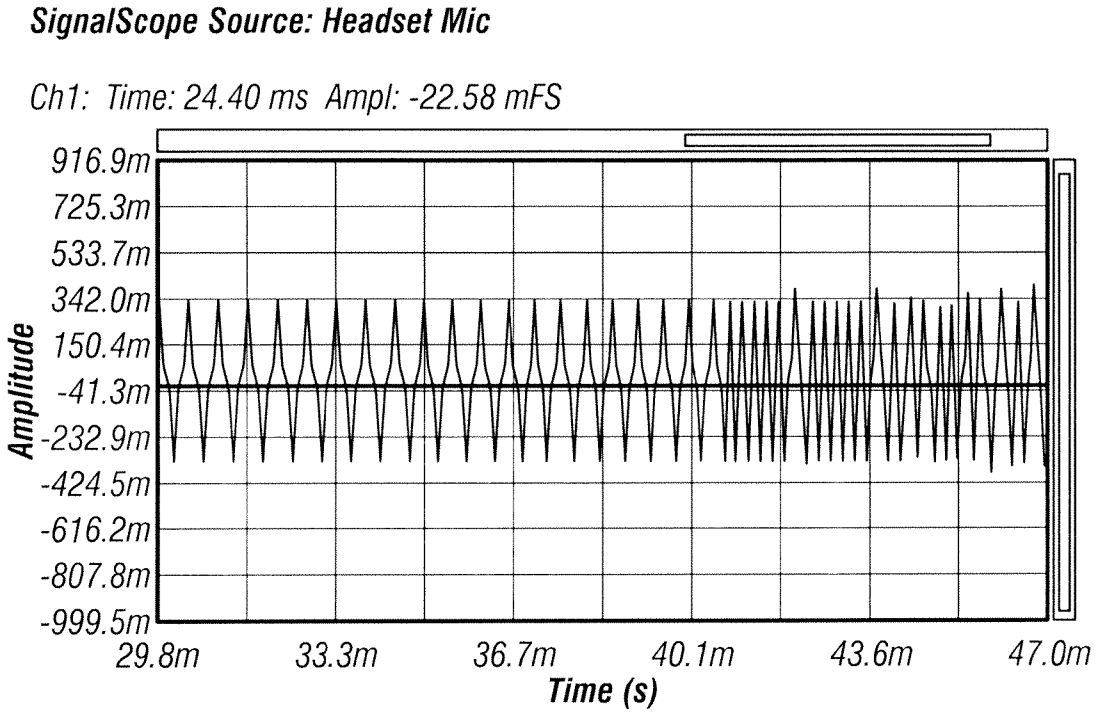

Track 1 forward

FIG. 7A

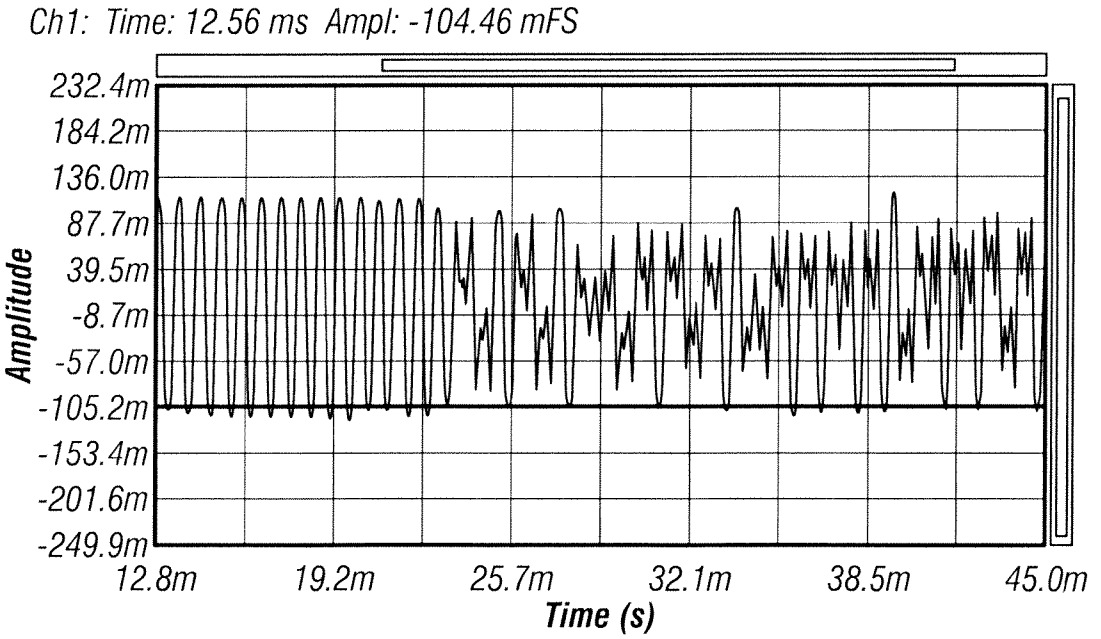

Track 1 reverse

FIG. 7B

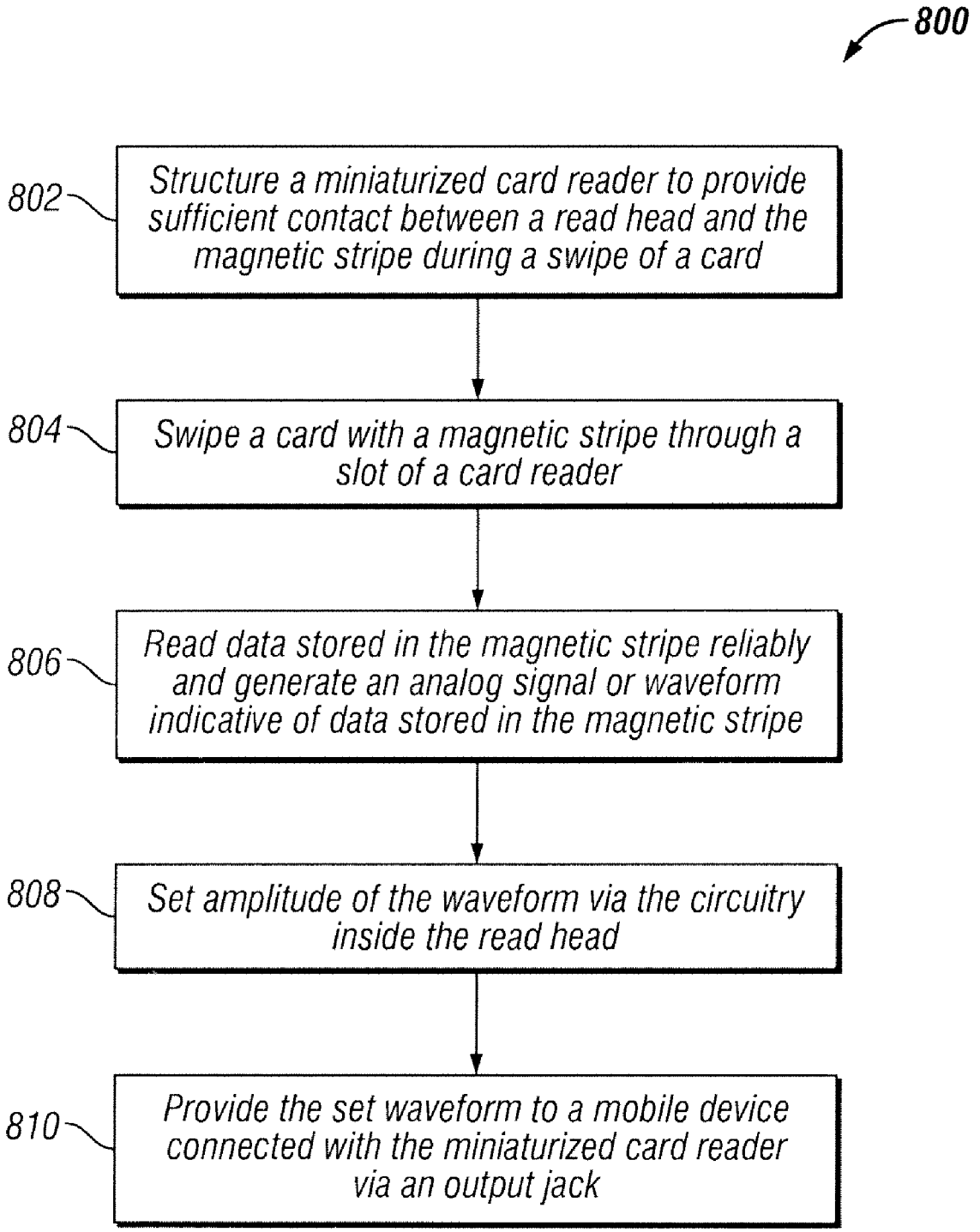
800
802
Structure a miniaturized card reader to provide sufficient contact between a read head and the magnetic stripe during a swipe of a card
804
Swipe a card with a magnetic stripe through a slot of a card reader
806
Read data stored in the magnetic stripe reliably and generate an analog signal or waveform indicative of data stored in the magnetic stripe
808
Set amplitude of the waveform via the circuitry inside the read head
810
Provide the set waveform to a mobile device connected with the miniaturized card reader via an output jack

FIG. 8

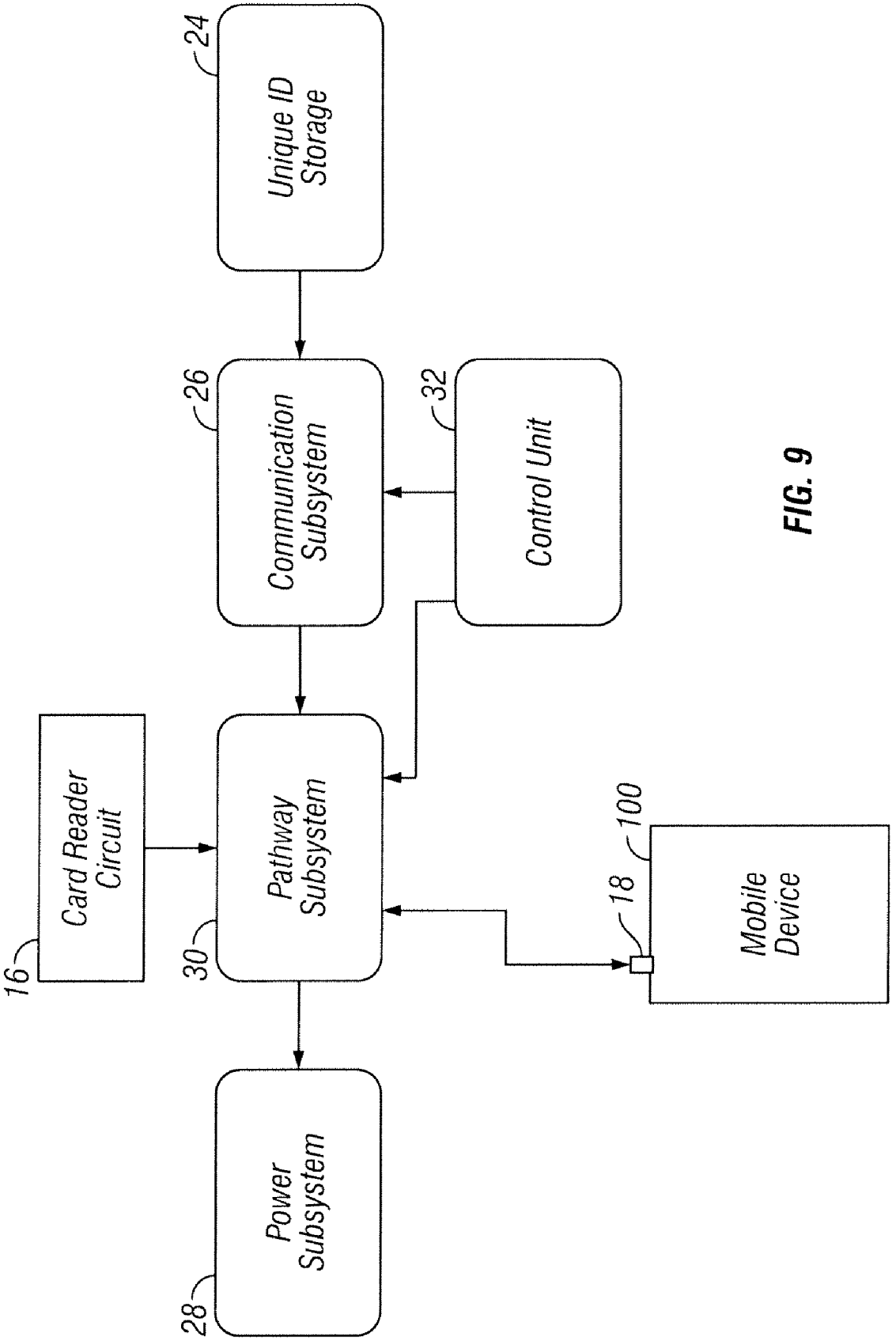
Unique ID Storage
24
Communication Subsystem
26
Control Unit
32
Card Reader Circuit
16
Pathway Subsystem
30
Mobile Device
100
18
Power Subsystem
28

FIG. 9

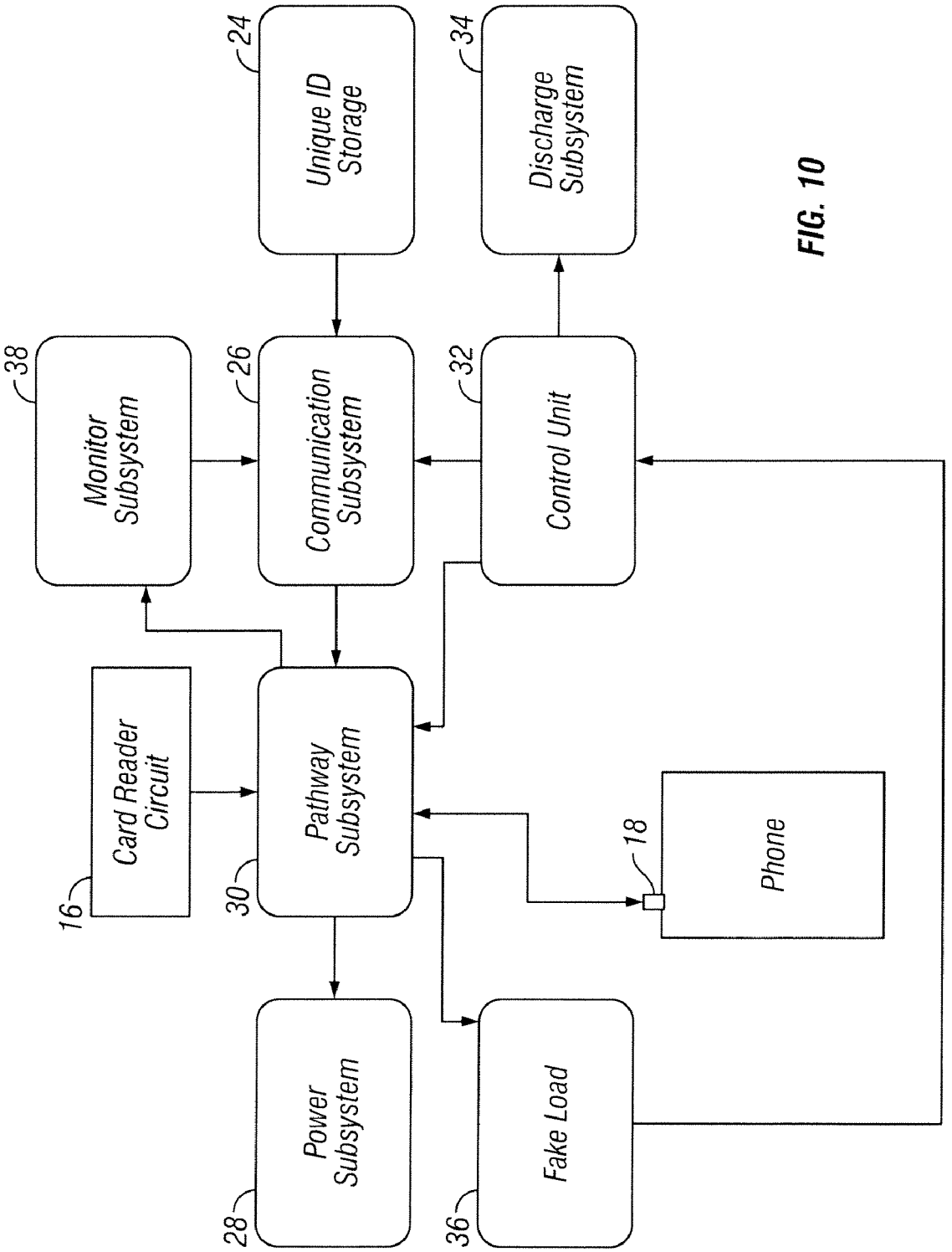
Monitor Subsystem
38
Unique ID Storage
24
Communication Subsystem
26
Discharge Subsystem
34
Control Unit
32
Card Reader Circuit
16
Pathway Subsystem
30
Phone
18
Power Subsystem
28
Fake Load
36

FIG. 10

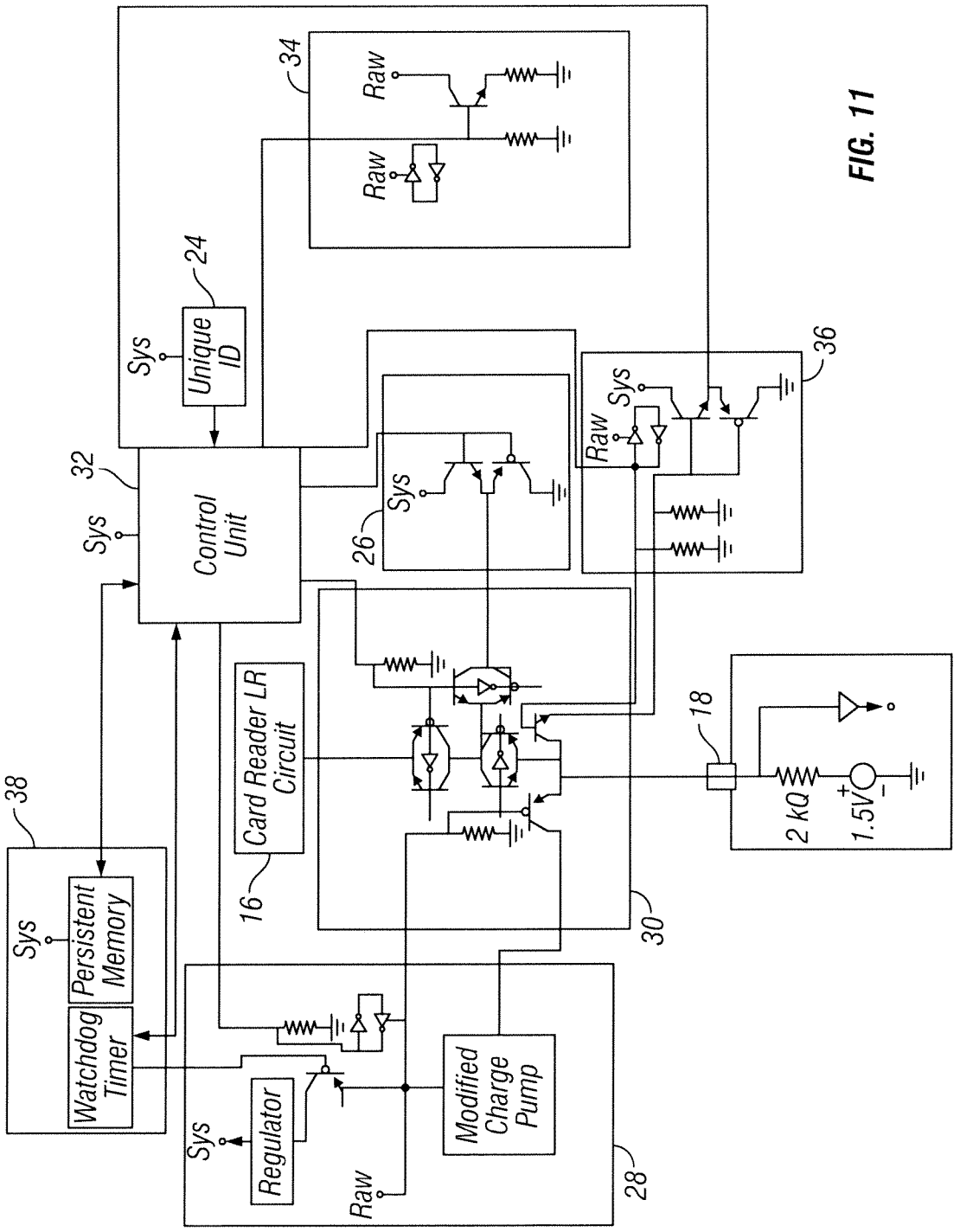
Sys
Unique ID
24
Control Unit
32
Sys
Raw
Raw
34
Sys
26
Raw
Sys
36
Card Reader LR Circuit
16
18
2 kΩ
1.5V
30
38
Sys
Persistent Memory
Watchdog Timer
Sys
Regulator
Raw
Modified Charge Pump
28

FIG. 11

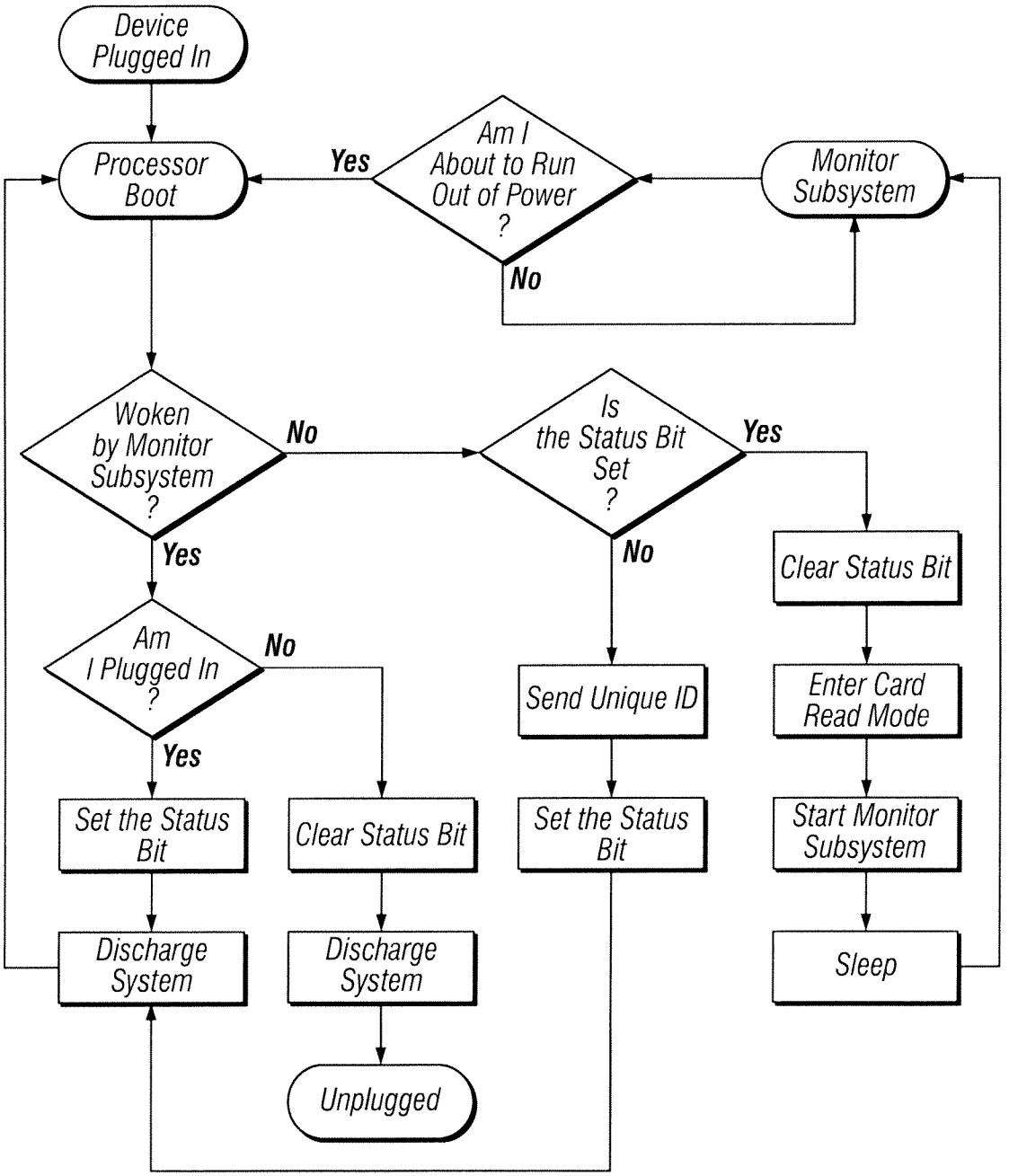
Device Plugged In
Processor Boot
Yes
Am I About to Run Out of Power ?
No
Monitor Subsystem
Woken by Monitor Subsystem ?
No
Yes
Is the Status Bit Set ?
Yes
No
Clear Status Bit
Am I Plugged In ?
No
Yes
Send Unique ID
Enter Card Read Mode
Set the Status Bit
Clear Status Bit
Set the Status Bit
Start Monitor Subsystem
Discharge System
Discharge System
Sleep
Unplugged

FIG. 12

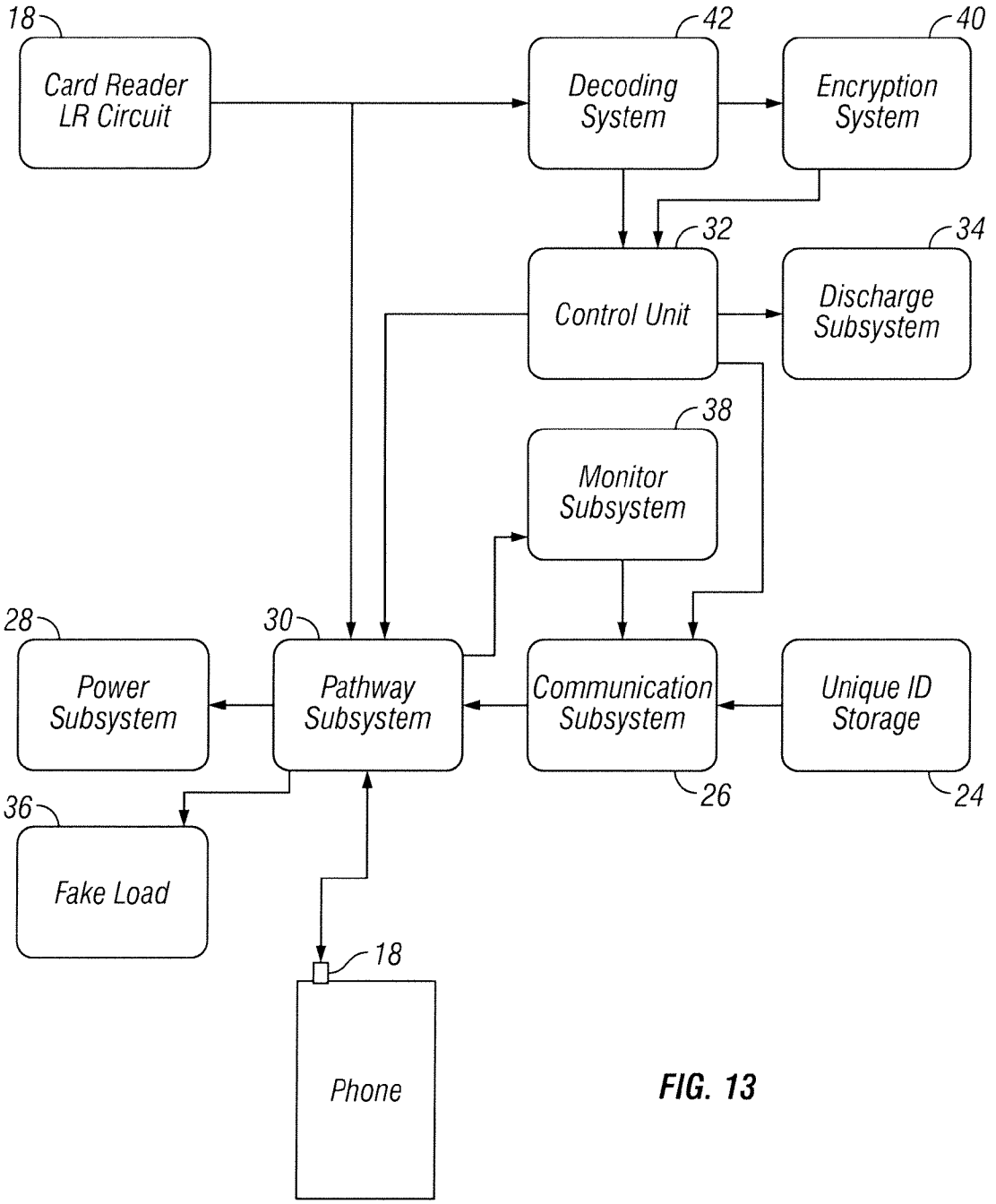
18
Card Reader LR Circuit
42
Decoding System
40
Encryption System
32
Control Unit
34
Discharge Subsystem
38
Monitor Subsystem
28
Power Subsystem
30
Pathway Subsystem
Communication Subsystem
26
Unique ID Storage
24
36
Fake Load
18
Phone

FIG. 13

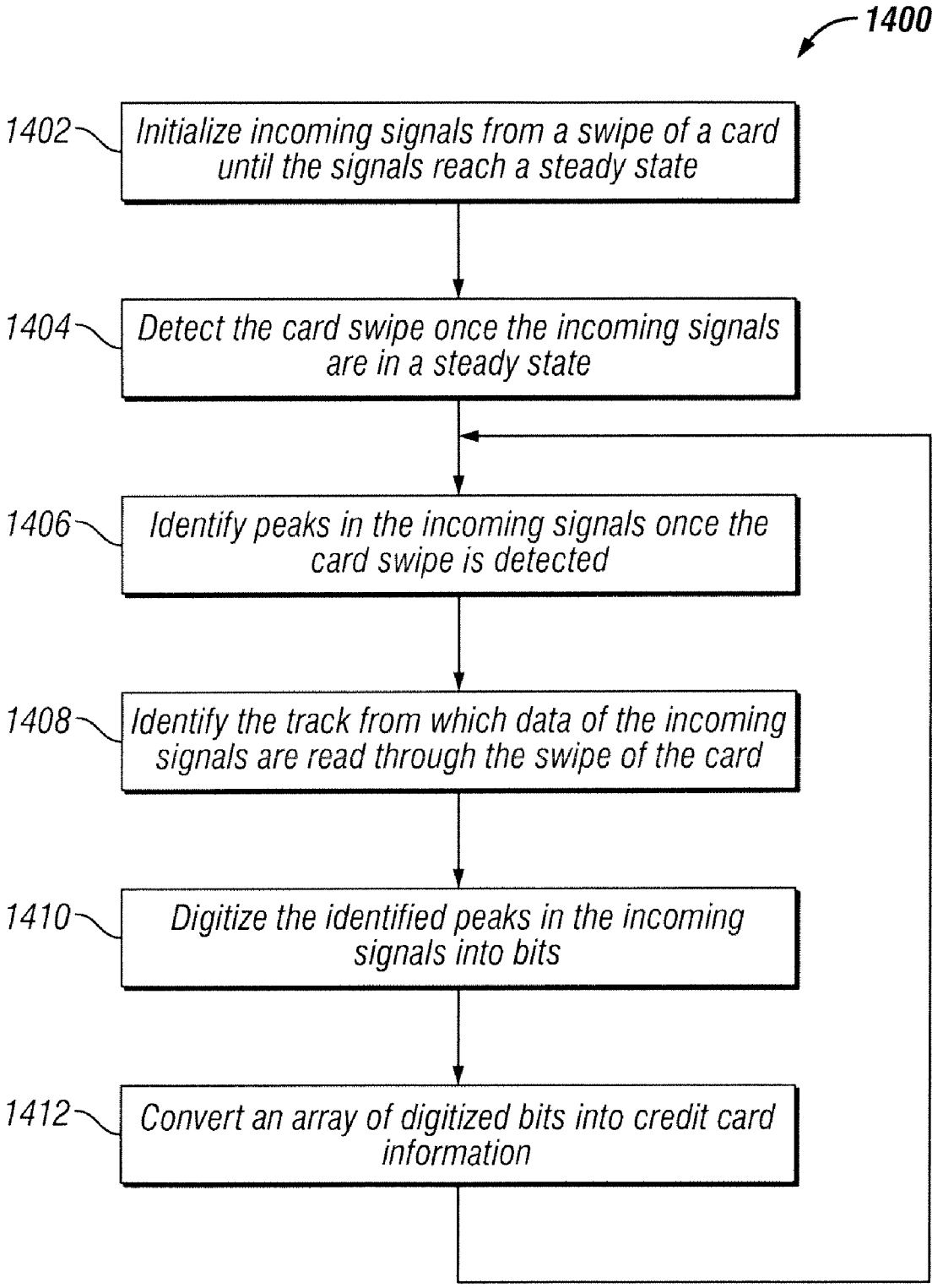
1400
1402
Initialize incoming signals from a swipe of a card until the signals reach a steady state
1404
Detect the card swipe once the incoming signals are in a steady state
1406
Identify peaks in the incoming signals once the card swipe is detected
1408
Identify the track from which data of the incoming signals are read through the swipe of the card
1410
Digitize the identified peaks in the incoming signals into bits
1412
Convert an array of digitized bits into credit card information

FIG. 14

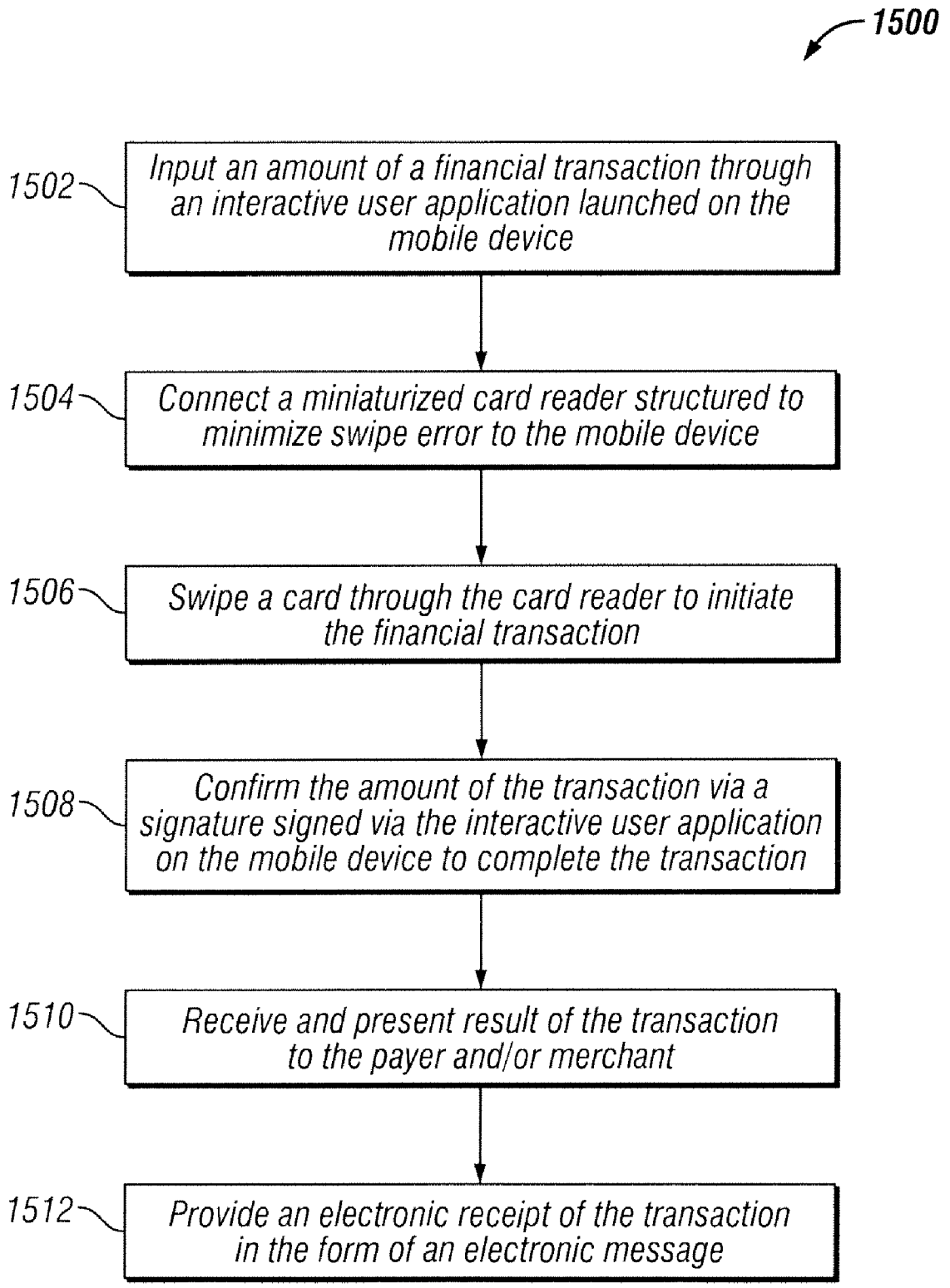
1500
1502
Input an amount of a financial transaction through an interactive user application launched on the mobile device
1504
Connect a miniaturized card reader structured to minimize swipe error to the mobile device
1506
Swipe a card through the card reader to initiate the financial transaction
1508
Confirm the amount of the transaction via a signature signed via the interactive user application on the mobile device to complete the transaction
1510
Receive and present result of the transaction to the payer and/or merchant
1512
Provide an electronic receipt of the transaction in the form of an electronic message

FIG. 15

Carrier
8:28 PM
Settings
Pay
Sightglass Coffee
Pay
$15.33
SIGHT GLASS
Enter an optional note
AMEX 1004
Clear
7
8
9
4
5
6
1
2
3
00
0

FIG. 16A

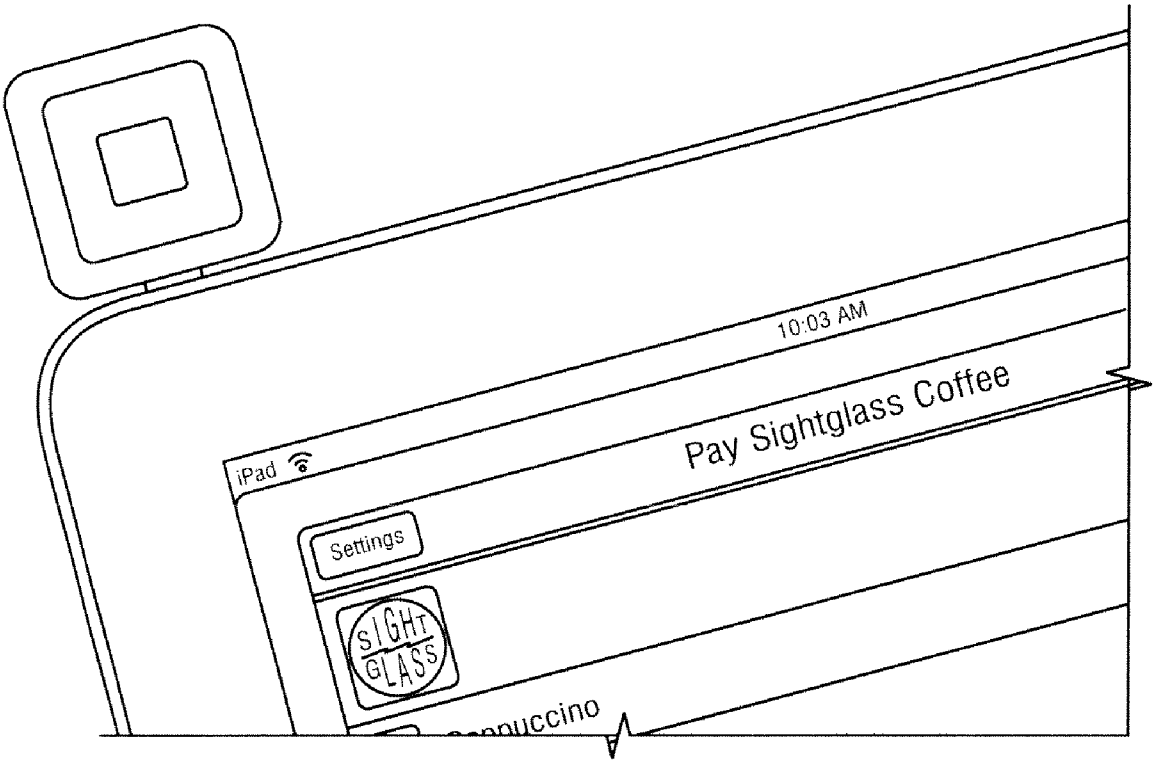

FIG. 16B

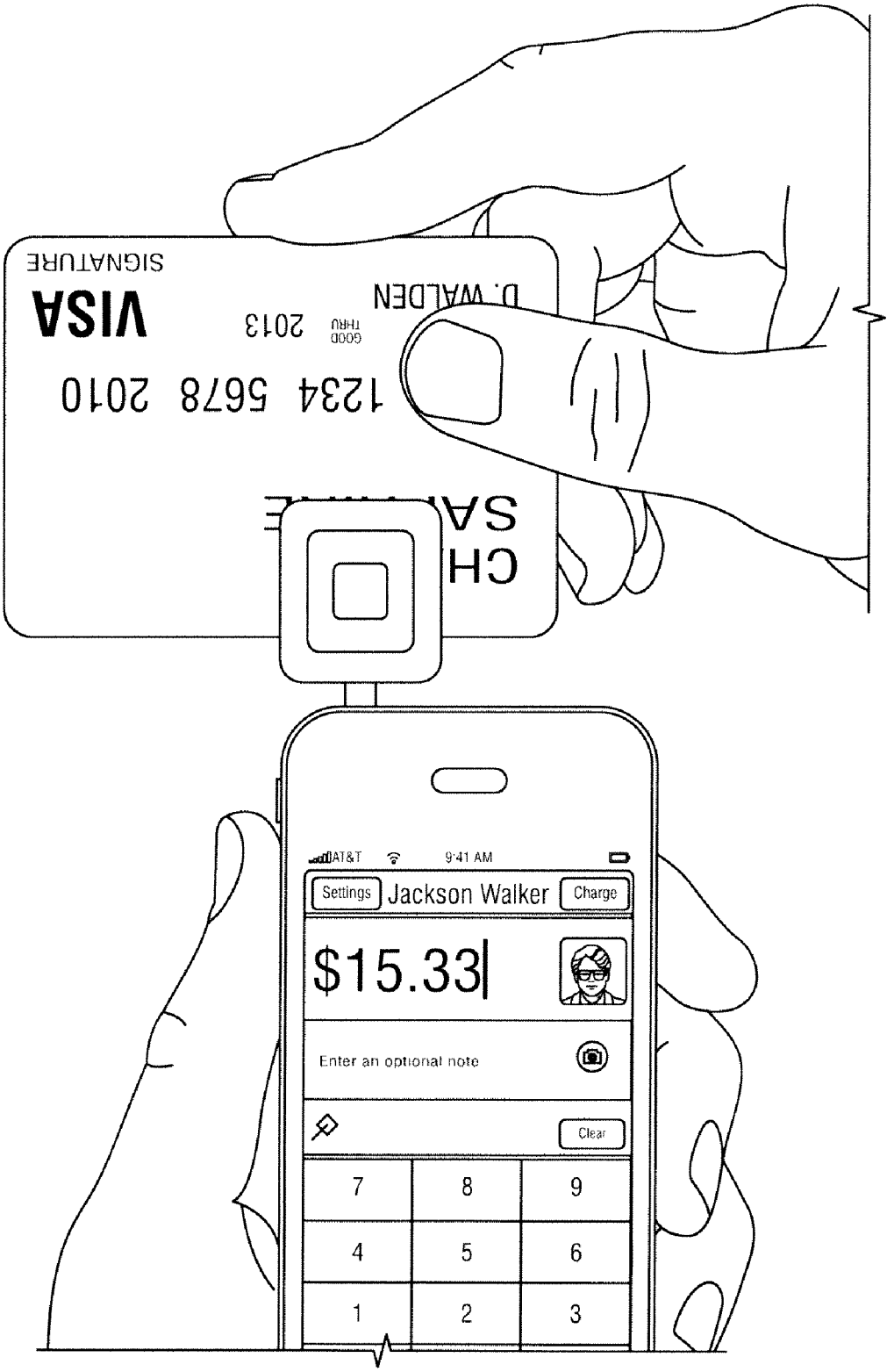
AT&T
9:41 AM
Settings
Jackson Walker
Charge
$15.33
Enter an optional note
Clear
7
8
9
4
5
6
1
2
3
1234 5678 2010
GOOD THRU 2013
VISA
D. WALDEN
SIGNATURE

FIG. 16C

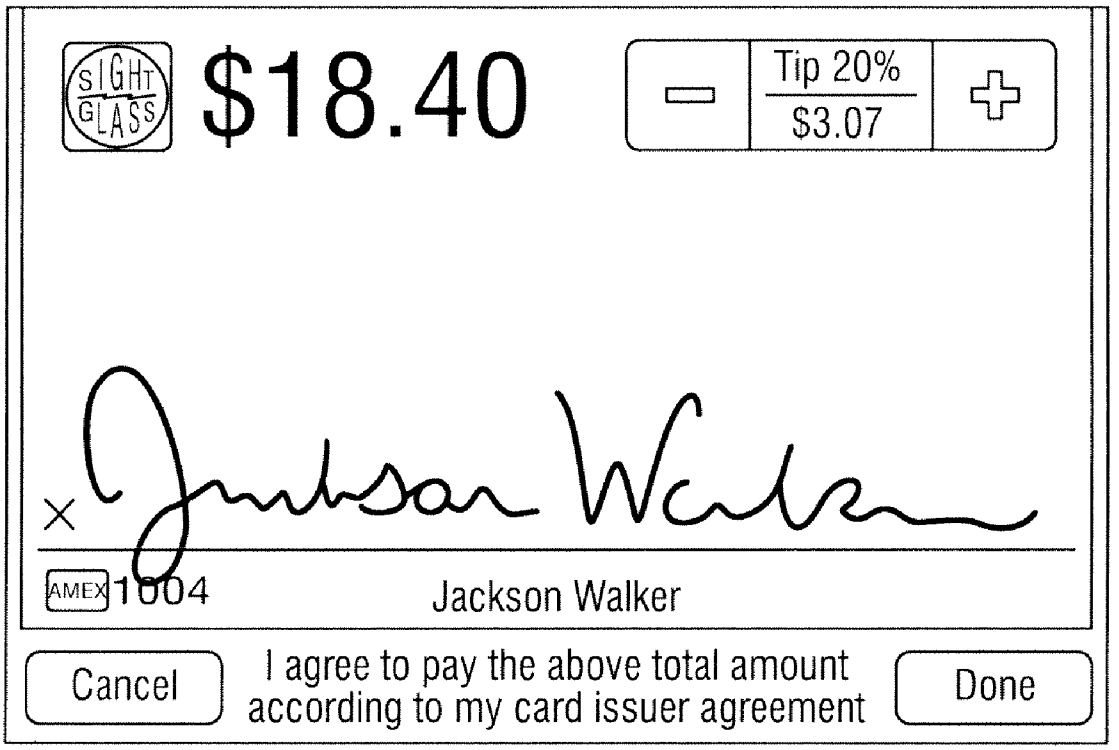
SIGHT GLASS
$18.40
Tip 20%
$3.07
AMEX 1004
Jackson Walker
Cancel
I agree to pay the above total amount according to my card issuer agreement
Done

FIG. 16D

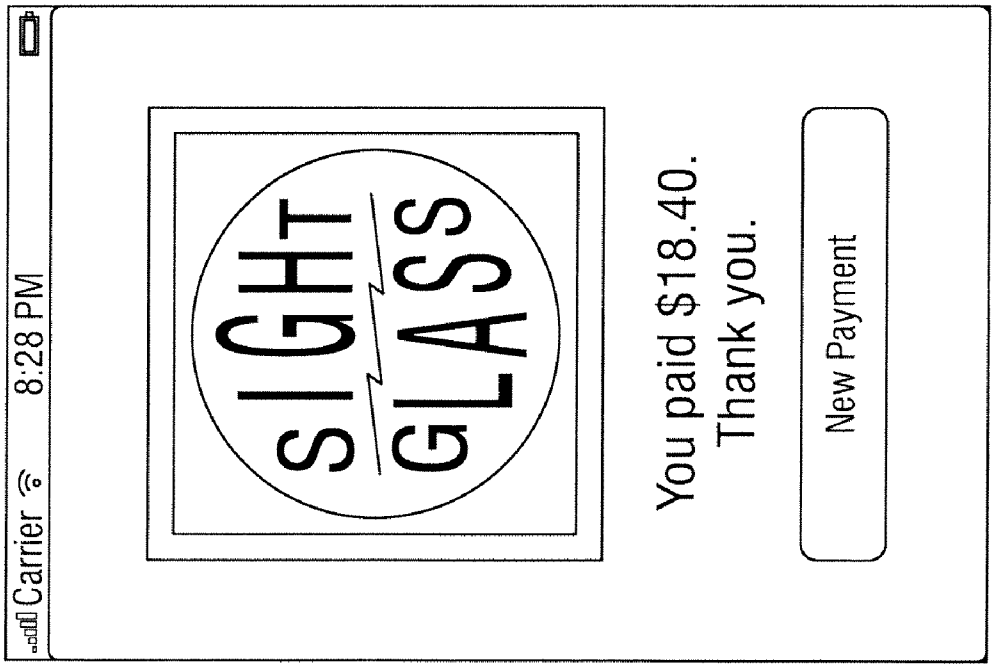

FIG. 16E

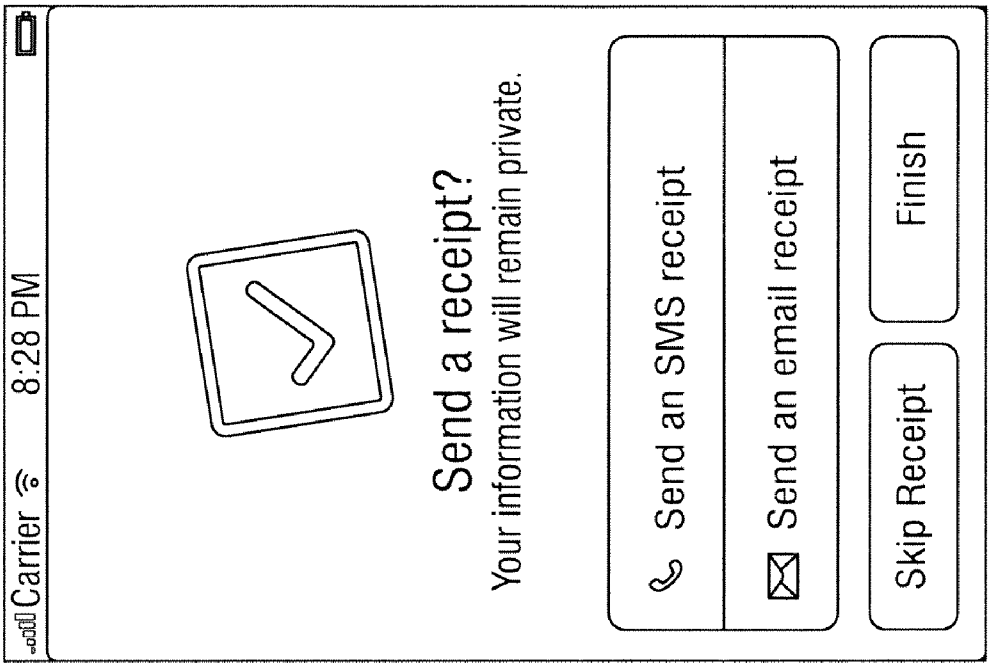

FIG. 16F

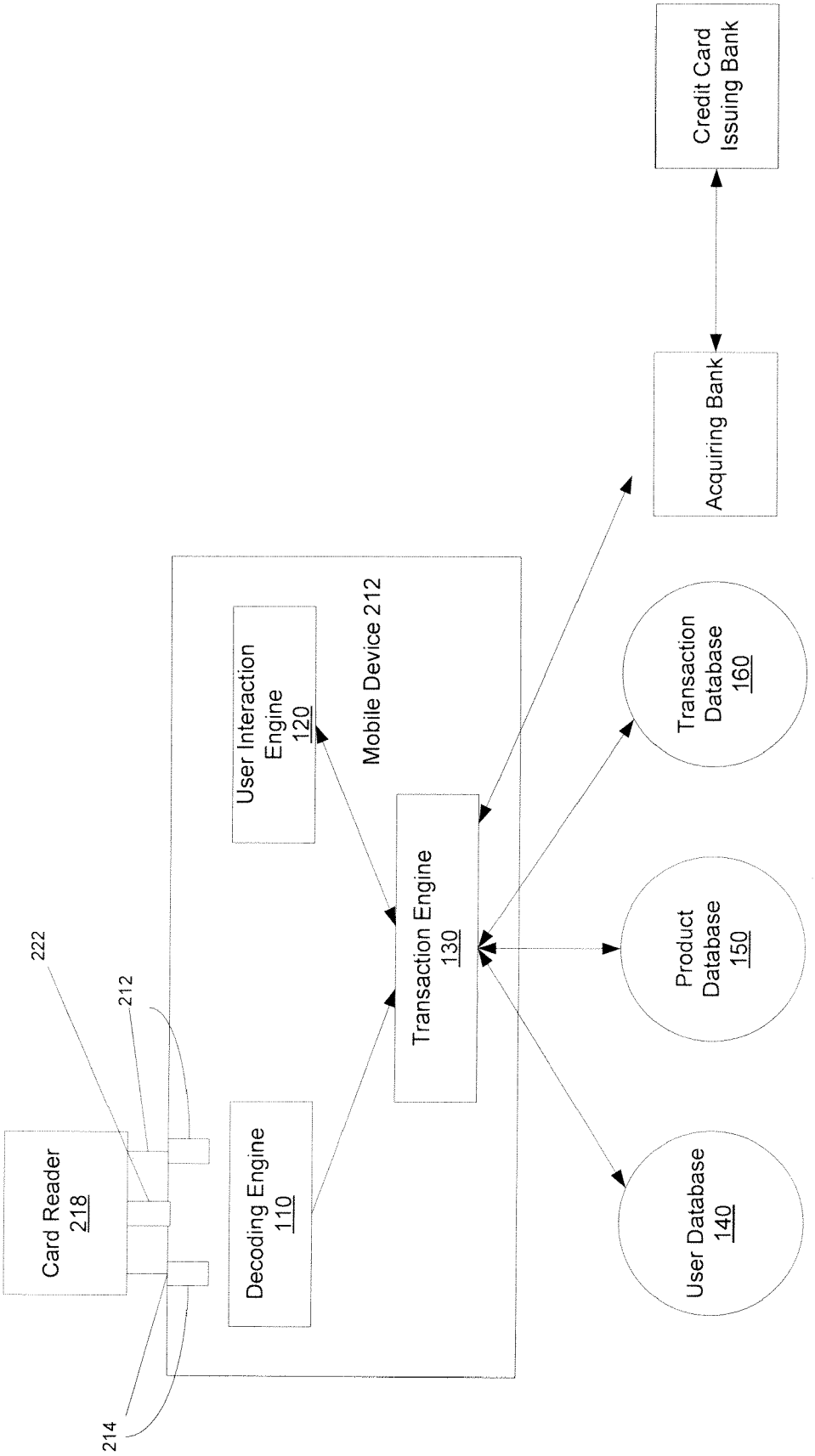
Credit Card Issuing Bank
Acquiring Bank
Mobile Device 212
User Interaction Engine 120
Transaction Engine 130
Decoding Engine 110
Card Reader 218
222
212
214
Transaction Database 160
Product Database 150
User Database 140

FIG. 17

READ HEAD DEVICE WITH NARROW CARD READING SLOT

CROSS-REFERENCE TO RELATED APPLICATIONS

This application is a continuation-in-part of U.S. Ser. Nos. 12/903,753, 12/903,823, both filed Oct. 13, 2010, U.S. Ser. No. 12/985,982 filed Jan. 6, 2011 and U.S. Ser. No. 13/005,822 filed Jan. 13, 2011, U.S. Ser. No. 13/010,796, filed Jan. 21, 2011 now abandoned and U.S. Ser. No. 13/012,495, filed Jan. 24, 2011, all of which applications are incorporated herein by reference.

This application is related to U.S. patent application Ser. No. 12/456,134, filed Jun. 10, 2009, and is hereby incorporated herein by reference.

BACKGROUND OF THE INVENTION

Plastic cards having a magnetic stripe embedded on one side of the card are prevalent in everyday commerce. These cards are used in various transactions such as to pay for purchases by using a credit card, a debit card, or a gasoline charge card. A charge card or a debit card may also be used to transact business with a bank through use of an automated teller machine (ATM). The magnetic stripe card is capable of storing data by modifying the magnetism of magnetic particles embedded in the stripe. The data stored on the magnetic stripe may be sensed or read by swiping the stripe past a read head. The analog waveform obtained by sensing the magnetic stripe must undergo a process known as decoding to obtain the digital information stored in the magnetic stripe of the card.

Currently, there are hundreds of magnetic stripe readers/swipers on the market, all of them are at least as long as the credit card itself. These existing readers/swipers can be classified as either platform card readers or plunge card readers. Platform card readers are traditional card swipers with single rails, which allow a card to be held against the base of the reader by the user and moved across the read head of the reader. Plunge swipers guide a card by two sets of rails and a backstop. Once the user has inserted the card against the backstop, the card is read as it is removed from the plunge swipers. Plunge swipers are common on ATMs and other self-pay devices because they are less prone to hacking.

Magnetic stripe cards having standard specifications can typically be read by point-of-sale devices at a merchant's location. When the card is swiped through an electronic card reader, such as a platform card reader, at the checkout counter at a merchant's store, the reader will usually use its built-in modem to dial the number of a company that handles credit authentication requests. Once the account is verified and an approval signal will be sent back to the merchant to complete a transaction.

Although magnetic stripe cards are universally used by merchants, there is no way for an individual to take advantage of the card to receive a payment from another individual (who is not a merchant) by swiping the card through a simple reader attached to his/her mobile device. For a non-limiting example, one person may owe another person money for a debt, and the conventional way to pay the debt is to provide cash or a check. It would be convenient to be able to use a credit card or a debit card to pay off the debt. In addition, it is advantageous for an individual to make payment to another individual or merchant by swiping his magnetic stripe card through a reader connected to a mobile device.

The foregoing examples of the related art and limitations related therewith are intended to be illustrative and not exclusive. Other limitations of the related art will become apparent upon a reading of the specification and a study of the drawings.

SUMMARY OF THE INVENTION

An object of the present invention is to provide systems and methods for payment by mobile devices.

Another object of the present invention is to provide systems and methods for payment using a portable electronic device, such devices include software, firmware, hardware, or a combination thereof that is capable of at least receiving the signal, decoding if needed, exchanging information with a transaction server to verify the buyer and/or seller's account information, conducting the transaction.

A further object of the present invention is to provide a read head device, and its methods of use, that includes a slot, a read head for reading data stored on a magnetic strip of a financial transaction card to produce a signal indicative of data stored on the magnetic stripe, where the signal is decoded at a mobile device coupled to the card reader device.

These and other objects are achieved in a read head device positioned in a housing and configured to be coupled to a mobile device. The read head has a slot for swiping a magnetic stripe of a financial transaction card. The slot is utilized to complete a financial transaction between a buyer and seller. The read head reads data on the magnetic stripe and produces a signal indicative of data stored on the magnetic stripe. The read head device includes an output jack adapted to be inserted at least one of the audio jack or microphone input port of a mobile appliance for providing a signal indicative of data stored on the magnetic stripe to the mobile device. The slot is configured to maintain contact between the read head and the magnetic stripe of the financial transaction card during a swipe and decoding of the signal is performed in the mobile device. The decoding includes determining pulses in the signal and converting at least some of the pulses to characters.

In another embodiment of the present invention, a method is provided for reading a financial transaction card having data stored on a magnetic stripe incorporated into the financial transaction card. A read head is provided that includes an output jack coupled to at least one of an audio jack or a microphone input port of a mobile device. The read head has a slot with a width no greater than 1 mm. The financial transaction card is swiped through the slot. In response to a successful swipe of the financial transaction card in the card reader, data stored in the magnetic stripe is read and a signal is generated that is indicative of data stored in the magnetic stripe. This signal is provided to the mobile device and decoded at the mobile device. The decoding includes determining pulses in the signal and converting at least some of the pulses to characters.

BRIEF DESCRIPTION OF THE DRAWINGS

FIG. **1** depicts an example of a system diagram to support financial transaction between a payer and a payee through a miniaturized card reader connected to a mobile device.

FIG. **2** depicts an example of an external structural diagram of a miniaturized card reader.

FIGS. **3**(*a*)-(*b*) depict examples of actual card reader with miniaturized design.

FIGS. **4**(*a*)-(*b*) depict examples of alignment between read head of the card reader and magnetic stripe of card being swiped.

FIG. **5** depicts an example of a TRS connector as a part of card reader.

FIGS. **6**(*a*)-(*c*) depict examples of internal structures of a miniaturized card reader.

FIGS. **7**(*a*)-(*b*) depict examples of waveforms of data read from one track of the magnetic stripe by read head when the card is swiped through the slot of the card reader in the forward and reverse directions, respectively.

FIG. **8** depicts a flowchart of an example of a process to support swiping of a card with a magnetic stripe through a miniaturized portable card reader.

FIG. **9** depicts an example of schematic diagram of passive ID circuitry embedded in the card reader.

FIG. **10** depicts an example of schematic diagram that contains additional components of passive ID circuitry **22** that contribute to the user experience.

FIG. **11** depicts an example of an implementation for passive ID circuitry **22** depicted in FIG. **10**.

FIG. **12** depicts a flowchart of an example of a process to deliver the unique ID to mobile device via the passive ID circuitry.

FIG. **13** depicts an example of additional encryption and/or decryption systems included in the passive ID circuitry for encrypting and decrypting of unique ID of card reader.

FIG. **14** depicts a flowchart of an example of a process to support decoding of incoming signals from swiping of a card with a magnetic stripe through a miniaturized portable card reader.

FIG. **15** depicts a flowchart of an example of a process to support financial transaction between a payer and a payee through a miniaturized card reader connected to a mobile device.

FIGS. **16**(*a*)-(*f*) depict screenshots of an example of a financial transaction between a purchaser and a merchant through a miniaturized card reader connected to a mobile device.

FIG. **17** illustrates an integrated read head/mobile device embodiment of the present invention.

DETAILED DESCRIPTION OF THE PREFERRED EMBODIMENTS

The approach is illustrated by way of example and not by way of limitation in the figures of the accompanying drawings in which like references indicate similar elements. It should be noted that references to "an" or "one" or "some" embodiment(s) in this disclosure are not necessarily to the same embodiment, and such references mean at least one.

A new approach is proposed that contemplates systems and methods to enable an individual to complete a financial transaction by swiping a magnetic stripe card through a card reader connected to a mobile device. It will be appreciated that the systems and methods of the present invention can be used with financial transactions cards characterized as: (i) allowing a user to choose to pay with reward points or credit, (ii) one that is a credit and a debit card, (iii) having fraud protection built into the card, (iv) having an integrated chip instead of a magnetic strip and the like. In the embodiment of card with an integrated chip, the card has electrical connectors which when fed a current respond with a signal indicative of information stored on the card. A read head is not used with this type of card.

Here, the financial transaction can be any transaction that involves receiving or sending payment from one person to another. The magnetic stripe card can be but is not limited to a credit card, a debit card, or other types of payment authenticating pieces capable of carrying out the financial transaction. The size of the card reader is miniaturized to be portable for connection with the mobile device. The card reader is configured to reliably read data encoded in a magnetic strip of the card with minimum error in a single swipe and provide a signal that corresponds to the data read to the mobile device, which then decodes the incoming signal from the card reader and acts as a point-of-sale device to complete the financial transaction. Such an approach enables a person to become either a micro-merchant (payee) or a buyer/customer (payer) without having to purchase expensive card reader devices or software.

FIG. **1** depicts an example of a system diagram to support financial transaction between a payer and a payee through a miniaturized card reader connected to a mobile device. Although the diagrams depict components as functionally separate, such depiction is merely for illustrative purposes. It will be apparent that the components portrayed in this figure can be arbitrarily combined or divided into separate software, firmware and/or hardware components. Furthermore, it will also be apparent that such components, regardless of how they are combined or divided, can execute on the same host or multiple hosts, and wherein multiple hosts can be connected by one or more networks.

In the example of FIG. **1**, the system includes a mobile device **100**, a miniaturized card reader **10** connected to mobile device **100**, a decoding engine **110**, a user interaction engine **120**, and a transaction engine **130**, all running on mobile device **100**. Additionally, the system may also include one or more of user database **140**, product or service database **150**, and transaction database **160**, all coupled to the transaction engine **130**.

As used herein, the term engine refers to software, firmware, hardware, or other component that is used to effectuate a purpose. The engine will typically include software instructions that are stored in non-volatile memory (also referred to as secondary memory). When the software instructions are executed, at least a subset of the software instructions is loaded into memory (also referred to as primary memory) by a processor. The processor then executes the software instructions in memory. The processor may be a shared processor, a dedicated processor, or a combination of shared or dedicated processors. A typical program will include calls to hardware components (such as I/O devices), which typically requires the execution of drivers. The drivers may or may not be considered part of the engine, but the distinction is not critical.

As used herein, the term database is used broadly to include any known or convenient means for storing data, whether centralized or distributed, relational or otherwise.

In the example of FIG. **1**, mobile device **100** to which the portable card reader **10** is connected to can be but is not limited to, a cell phone, such as Apple's iPhone® (mobile digital device), other portable electronic devices, such as Apple's iPod Touches® (mobile digital device), Apple's iPads® (mobile digital devices), and mobile devices based on Google's Android™ operating system, and any other portable electronic device that includes software, firmware, hardware, or a combination thereof that is capable of at least receiving the signal, decoding if needed, exchanging information with a transaction server to verify the buyer and/or seller's account information, conducting the transaction, and generating a receipt. Typical components of mobile device **100** may include but are not limited to persistent memories like flash ROM, random access memory like SRAM, a camera, a bat-

tery, LCD driver, a display, a cellular antenna, a speaker, a Bluetooth® circuit, and WIFI circuitry, where the persistent memory may contain programs, applications, and/or an operating system for the mobile device.

In one embodiment of the present invention a system is provided with transaction engine **130** running on mobile device **100**. In response to a financial transaction between a buyer and a seller, the mobile device **100** accepts information selected including but not limited to information from financial transaction or information pertaining to financial transaction card used by the buyer in the transaction. Additionally, a financial transaction device can be utilized. Non-limiting examples of financial transaction devices include but are not limited to a, wristband, RFID chip, cell phone, biometric marker and the like. At least a portion of this information is communicated with a third party financial institution or payment network to authorize the transaction. The buyer receives confirmation of the payment. Payment confirmation can be in real time.

Payment confirmation can be made with a communication channel of the buyer's choice. As non-limiting examples, confirmation of payment can be an electronic notification in the form selected from at least one of, email, SMS message, tweet (message delivered via Twitter® (online social networking service)), instant message, communication within a social network and the like.

In response to the transaction, a confirmation is made that the buyer is authorized to use the financial transaction card in order to prevent fraud. There can also be a confirmation that there are sufficient funds for the purchase made by the buyer.

In one embodiment, it is determined that that the buyer, authorized to use the financial transaction card, is present with the seller at the time of the financial transaction.

Miniaturized Card Reader

In the example of FIG. **1**, miniaturized card reader **10** is configured to read data encoded in a magnetic strip of a card being swiped by a buyer and send a signal that corresponds to the data read to mobile device **100** via a signal plug **18**. This signal is at least partially if not fully decoded in the mobile device **100**.

The size of card reader **10** is miniaturized to be portable for connection with mobile device **100**. For a non-limiting example, the size of card reader **10** can be miniaturized to an overall length of less than 1.5". In addition, the miniaturized card reader **10** is also designed to reliably read the card with minimum error via a single swipe by counteracting vendor specific filtering done by mobile device **100**. Note that this broad overview is meant to be non-limiting as components to this process are represented in different embodiments. For instance the decoding engine **110** can be embedded in the card reader **10** as shown in FIG. **13** as the decoding system **42**. FIG. **2** depicts an example of an external structural diagram of miniaturized card reader **10**. Although the diagrams depict components as functionally separate, such depiction is merely for illustrative purposes. It will be apparent that the components portrayed in this figure can be arbitrarily combined or divided into separate software, firmware and/or hardware components.

In the example of FIG. **2**, miniaturized card reader **10** is shown to comprise at least a housing **12** having a slot **14**, a read head **16** embedded on a wall of slot **14**, a signal plug **18** extending out from the housing **12**, and an optional passive ID circuit **22**.

FIG. **3**(*a*) depicts an example of an actual card reader with miniaturized design and FIG. **3**(*b*) depicts other examples of miniaturized card reader with width around 0.5".

The card reader **10** includes the slot **14** and is miniaturized relative to the size of the mobile device **100**. In some embodiments, the housing **12** is not included.

In one embodiment, the slot **14** is configured to maintain contact between the read head **16**, and the magnetic stripe of the financial transaction card during a swipe. The signal is decoded in the mobile device **100**. The decoding includes determining pulses in the signal and converting at least some of the pulses to characters. In one embodiment, the slot **14** has a width of no greater than 1 mm. The width of the slot **14** is sufficient to enable a successful swiping of the financial transaction card, while producing the signal. It is sized to enable the successful swipe without creating sufficient torque between the signal plug **18** or output jack and the read head **16** or at the mobile device **100** to cause damage due to excessive torque. If the slot **14** is too wide, then it is more difficult to achieve a successful swipe that produce the signal. If there is a miss, or insufficient data is generated, then the resulting signal is not competent. If the slot **14** is too narrow, then the financial transaction card can not be swiped. The size of the slot **14** is selected to reduce torque as discussed above. Additionally, in one embodiment, the output jack **18** is at least partially if not fully rotatable relative to the port it is coupled to in the mobile device **100**. The decoding includes error checking. In one embodiment, the decoding includes detecting that data in the signal is from the financial transaction card, seeing the beginning and ending sentinels and reconstructing data in the signal from a pattern of pulses.

In one embodiment of the present invention, the mobile device **100** has an audio input port and a line input port. In one embodiment, a sampling rate of the signal at the audio input port or a line input port of the mobile device is at least 15 kHZ. In various other embodiments, the sample rate of the signal at the audio input port or line import port can be, least 20 kHz; at least 25 kHz, at least 30 kHz, at least 35 kHz or at least 40 kHz.

In one embodiment, the slot **14** is oriented and sized to reduce torque applied on the read head **10** when the financial transaction card is swiped through the slot **14** in order to maintain accuracy and reliability of the data read by the read head **10**.

In the example of FIG. **2**, housing **12** of card reader **10** is designed to be asymmetrical with respect to slot **14**, with texture such as logo on one side of the housing that can be felt and recognized by a user with a touch of a finger. For correct swiping of the card, the texture side of housing **12** should match with the texture (front) side of the card, so that a user can easily identify the right side of the reader to swipe the card through slot **14** without actually looking at the reader or card. Even a blind person is able to swipe the card correctly by matching the texture side of the reader with the texture side of the card.

In the example of FIG. **2**, the slot **14** is wide enough and deep enough to accept a card having a magnetic stripe so that the stripe will fit within the slot **14**. More importantly, the slot **14** is configured to reduce the torque applied on the reader **10** when the card is swiped through slot **14** in order to maintain accuracy and reliability of the data read by read head **16**. Since the size of card reader **10** is miniaturized, slot **14** also has a length that is significantly less than the length of the card to be inserted into the slot **14**.

To correctly read the data on the magnetic stripe of the card, the read head **16** must maintain contact with the stripe as the card moves past slot **14**. If the card rocks during the swipe, the alignment of the head **12** with the stripe may be compromised. As the length of the slot **14**, i.e., the card path through which the card swiped though slot **14**, is shortened, rocking

and head alignment may become significant issues. As shown in FIG. **4**(*a*), if the magnetic stripe card is swiped through without the base of the card resting against the flat bottom piece, the magnetic stripe will not align with the read head **16** when the card is swiped through slot **14** having a flat base **15**.

In some embodiments, the base **15** of slot **14** can be changed from flat to a curved base with a radius in order to increase contact between the read head **16** and the magnetic stripe to address the rocking problem. As shown in FIG. **4**(*b*), the read head **16** can maintain contact with the magnetic stripe, even with some additional error due to the gradation of contact introduced by the curved base **15**.

FIG. **5** depicts an example of signal plug **18** as part of card reader **10**. Here, signal plug **18** can be but is not limited to a TRS (tip, ring, sleeve) connector also known as an audio plug, phone plug, plug plug, stereo plug, mini-plug, or a mini-stereo audio connector. The signal plug **18** may be formed of different sizes such as miniaturized versions that are 3.5 mm or 2.5 mm.

In some embodiments, signal plug **18** may be retractable within the housing **12**. In some embodiments, signal plug **18** is configured to extend beyond housing **12** of the reader in order to accommodate connection with mobile devices **100** having cases or having a recessed plug-in socket, wherein the socket can be but is not limited to a microphone input socket or a line in audio input of the mobile device.

In some embodiments, housing **12** of card reader **10** is made of non-conductive material such as plastic so that the reader will not interfere with the function of mobile device **100** it is connected with. Such choice of material is important since the outer case of certain mobile devices, such as iPhone® 4, is conductive and serves as an antenna for the device, which function could potentially be interfered with if the metal case of the device gets in touch with the housing of a card reader made of conductive material.

FIG. **6**(*a*) depicts an example of an internal structural diagram of a miniaturized card reader. Although the diagrams depict components as functionally separate, such depiction is merely for illustrative purposes. It will be apparent that the components portrayed in this figure can be arbitrarily combined or divided into separate software, firmware and/or hardware components.

In the example of FIG. **6**(*a*), the internal structure inside housing **12** of card reader **10** is shown to comprise at least a read head **16** with embedded circuitry, and a spring structure **20** to support read head **16**. FIG. **6**(*b*) depicts an example of an internal structure an actual miniaturized card reader. FIG. **6**(*c*) depicts an example of separated components of read head **16** and spring structure **20** used in the actual miniaturized card reader.

In the example of FIGS. **6**(*a*)-(*c*), read head **16**, which for a non-limiting example, can be an inductive pickup head, detects and provides data stored in the magnetic stripe of a card to a connected mobile device **100**. More specifically, as the magnetic stripe of a card is swiped through slot **14** and in contact with read head **16**, the card reader device **10** reads one or more tracks of data or information stored in the magnetic stripe of the card via the detection circuitry embedded inside the read head. Here, data stored in the magnetic stripe may be in the form of magnetic transitions as described in the ISO 7811 standards. As the card moves past the read head **16**, magnetic transitions representing data induce a voltage or waveform in a coil (not shown) of read head **16** due to such relative movement between read head **16** and the stripe (called the Hall Effect), wherein a resistor (not shown) inside read head **16** sets the amplitude of the waveform. This waveform is sent via the signal plug **18** into the socket which is registered by the microphone of the mobile device **100** connected with card reader **10**.

In some embodiments, read head **16** in card reader is capable of reading only one track of data (either track 1 or 2, but not both) from the magnetic stripe in order to reduce the size and structural complexity of compact read head **16** as only one pin needs to be included in the read head. FIGS. **7**(*a*)-(*b*) depict examples of waveforms of data read from track 1 (instead of both tracks 1 and 2 as by a traditional read head) of the magnetic stripe by read head **16** when the card is swiped through slot **14** in the forward and reverse directions, respectively.

In some embodiments, the size or thickness of the housing **12** of card reader **10** is configured to be narrow enough to accommodate only a single read head **16**. Such design is intended to be tampering-proof so that even if the housing **12** is tampered with, no additional circuitry can be added to the card reader **10** and such tampering will render the card reader non-functional.

In the example of FIGS. **6**(*a*)-(*c*), spring structure **20** is a flexible spring mounting to read head **16** without a screw, causing the read head to be suspended to housing **12** of card reader **10**. Here, spring **20** can either be connected to housing **12** via screws or welded to plastic housing **12** without using any screws. As the card moves past the read-head **16** on the miniaturized card reader, any card bending or misalignment may cause the read head to lose contact with the magnetic stripe. Spring **20** allows suspended read head **16** to swivel while maintaining contact pressure to track the stripe of the card being swiped. Spring **20** is designed to be sufficiently small to fit within the miniaturized card reader **10**, yet powerful enough to maintain good contact during the stripe. Unlike traditional spring structures, spring **20** positions the supports for read head **20** inside the overall form of the spring, which allows the spring to flex without having to make one support moveable.

FIG. **8** depicts a flowchart of an example of a process to support swiping of a card with a magnetic stripe through a miniaturized portable card reader. Although this figure depicts functional steps in a particular order for purposes of illustration, the process is not limited to any particular order or arrangement of steps. One skilled in the relevant art will appreciate that the various steps portrayed in this figure could be omitted, rearranged, combined and/or adapted in various ways.

In the example of FIG. **8**, the flowchart **800** starts at block **802** where a miniaturized card reader is structured to provide sufficient contact between a read head and the magnetic stripe during a swipe of a card. The flowchart **800** continues to block **804** where a card with a magnetic stripe is swiped through a slot of the miniaturized card reader. The flowchart **800** continues to block **806** where the read head reliably reads data stored in the magnetic stripe and generates an analog signal or waveform indicative of data stored in the magnetic stripe. The flowchart **800** continues to block **808** where amplitude of the waveform is set by the circuitry inside the read head. The flowchart **800** ends at block **810** where the set waveform is provided to a mobile device **100** connected with the miniaturized card reader via the signal plug **18**.

Passive ID Circuit

In some embodiments, housing **12** of card reader **10** may further encapsulate a passive ID circuitry **22** powered by the mobile device **100** through signal plug **18**, wherein passive ID circuitry **22** delivers an unique ID of the card reader to mobile device **100** only once upon the card reader being connected to (and powered up by) the mobile device. Although both are

integrated in the same housing **12**, passive ID circuitry **22** functions independently and separately from read head **18** without interfering with the read head's card swiping functions described above.

FIG. **9** depicts an example of schematic diagram of passive ID circuitry embedded in the card reader. In the example of FIG. **9**, passive ID circuitry **22** may comprise at least five main subsystem/components: unique ID storage **24**, communication subsystem **26**, which reads and transmits the unique ID from unique ID storage **24**, power subsystem **28**, which provides power to enable communication with mobile device **100**, a pathway subsystem **30** to route signals to signal plug **18** through the circuitry, and a control unit **32**, to orchestrate the communication between different systems. All of these subsystems can be implemented in hardware, software or a combination thereof. Communication subsystem **26**, power subsystem **28**, and read head **16** share the same signal plug **18** for connection with the mobile device. The components portrayed in this figure can be arbitrarily combined or divided into separate software, firmware and/or hardware components.

In the example of FIG. **9**, unique ID storage **24** is memory containing the Unique ID of the card reader. The unique ID storage **24** can be any persistent memory containing bytes that can be accessed by the communication subsystem **26**.

In the example of FIG. **9**, the power subsystem **28** comprises of a modified charge pump, which utilizes a digital circuit to artificially raise the voltage of a power source to a higher level. Normal charge pump operation requires large current which is then fed into several capacitors, and switching logic switches the capacitors between series and parallel configurations. In the example of FIG. **10**, the power source is a bias voltage provided by the mobile device meant for detection of a connected component. It is nominally 1.5V and is supplied through a 2 kΩ resistor, resulting in a maximum current of 750 μA. Details of how the power subsystem **28** function is described in FIG. **11**.

In standard operation the pathway subsystem **30** is configured to direct the mobile device's **100** bias voltage to the power subsystem **28**. After the power subsystem converts the bias voltage to a system voltage, the control unit **32** is able to operate. Control unit **32** configures the pathway subsystem **30** to allow the communication subsystem **26** access to the mobile device **100**. The communication subsystem **26** relays the unique ID from the unique ID storage **24**. The control unit **32** then configures the pathway subsystem **30** to allow the card reader circuit **16** access to the mobile device **100**.

FIG. **10** depicts an example of schematic diagram that contains additional components of passive ID circuitry **22** that contribute to the user experience. These additional systems prevent the mobile device **100** from perceiving that the card reader **10** has been disconnected during power cycles. These additional systems also ensure that the unique ID sent from unique ID storage **24** is sent as specified by the designer. This extra feature set comprises of a discharge subsystem **34** to force the device to power cycle, a fake load **36** so the mobile device **100** does not perceive a disconnect, and a monitor system **38** to manage card reader **10** behavior between power cycles.

In the example of FIG. **10**, communication subsystem **26** comprises a signal driver connected with control unit **32** and unique ID storage **24**. In a non-limiting embodiment of a system which sends an ID only once to a mobile device **100**, after the control unit **32** boots up, communication subsystem **26** will check a status bit in the monitor subsystem **38**. The first time this process occurs, the status bit will be not set. When the status bit is not set the ID is sent immediately. FIG. **12** contains a detailed flowchart of a non-limiting example of this process. In one embodiment the control unit **32** will write to the status bit in monitor subsystem **38**. It will then use the discharge system **34** to reset itself. During this time the pathway subsystem **30** will be configured to direct the signal path to the fake load preventing the mobile device **100** from detecting a disconnect with the card reader **10**. Once the power subsystem **28** has completed its power cycle, the control unit **32** will read the status bit. Upon seeing that the status bit is cleared it will configure the pathway subsystem **30** to direct the signal path to the card reader circuit **16**. The control unit **32** will then put the system into an extremely low power state (from here referred to as a sleep state). Only the monitoring subsystem **38** will remain active. The monitor subsystem **38** will wake the system from the sleep state at some time (time depending on implementation) before a power cycle. The control unit **32** will notified of the system awakening by the monitoring subsystem **38**. The control unit **32** will then set the status bit on the monitor subsystem **38** only if there is a voltage detected on the fake load indicating the reader is still connected. The control unit **32** will then force a power cycle.

FIG. **11** depicts an example of an implementation for passive ID circuitry **22** depicted in FIG. **10**. In some embodiments, power subsystem **28** has multiple capacitors in parallel. A voltage breaker (e.g., zener diode etc) and a latch are used to trigger the transition between parallel and series configurations. Once the latch is flipped, power subsystem **28** will remain in series configuration until the combined voltage drops bellow the CMOS trigger gate voltage at about 0.4V. At this time the passive ID circuitry **22** will reset and the unique ID delivery process will begin again.

In the example of FIG. **11**, pathway subsystem **30** comprises a plurality of latches controlled by control unit **32** for switching among various subsystems of passive ID circuitry **22**. When passive ID circuitry **22** is in operation, the default configuration allocates the output signal through signal plug **18** to modified charge pump of power subsystem **28**. After the latch to turn off modified charge pump **28** is triggered, control unit **32** will route signal plug **18** from read head **16** to communication subsystem **26** and transmit the unique ID through signal plug **18** after checking the status bit in unique ID storage **24**. Pathway subsystem **30** will then write to the status bit in unique ID storage **24** and discharge the power subsystem **28**. FIG. **12** depicts a flowchart of an example of a process to deliver the unique ID to mobile device **100** via the passive ID circuitry **22**.

In some embodiments, passive ID circuitry **22** may further include additional encryption and/or decryption systems as shown in FIG. **13** for encrypting and decrypting of unique ID of card reader **10**. In the example of FIG. **13**, the decoding system **42** and encryption system **40** can both use the control unit **32** from the passive ID circuitry **22** to communicate with the mobile device **100** over the communication subsystem **26**.

Signal Decoding

Once card reader **10** provides the set waveform to the attached mobile device **100**, the incoming signals (waveform) may be amplified, sampled, and converted to a stream of digital values or samples by decoding engine **110** running via a microprocessor inside the mobile device. Here, decoding engine **110** may comprise a pipeline of software decoding processes (decoders) to decode and process the incoming signals as described below, where each software process in this pipeline can be swapped out and replaced to accommodate various densities of track data read in order to reduce card swipe error rate. The incoming signals may be of low quality due to one or more of: low quality of data read from a single and/or low density track of a magnetic stripe of the card,

sampling speed limitations of the microphone input socket of the mobile device, and noise introduced into the mobile device **100** from card reader **10**. FIG. **14** depicts a flowchart of an example of a process to support decoding of incoming signals from swiping of a card with a magnetic stripe through a miniaturized portable card reader.

In the example of FIG. **14**, the flowchart **1400** starts at block **1402** where decoding engine **110** initializes its internal state by waiting for the system voltage to reach a steady state. Upon initial connection of a card reader, there is usually a burst of signal due to feedback caused by slight impedance mismatches and the presence of non-linear elements like the read head. After at least 3 time constants, the signal is determined to be in a steady state. During such initialization phase, the DC offset of the incoming signals are computed when the mobile device is first connected to the card reader over signal plug **18**. In some embodiments, initialization goes through at least the following steps:

Take one system buffer of audio signal and compute the DC offset of this buffer.

Save the computed DC offset.

Compute the average of the last three DC offsets.

Compute the variance of the current DC offset from the average computed in step **3**.

The following values presented were found to be optimum for performance in the decoding system. In the spirit of full disclosure they have been provided here to allow someone trained in the arts to be able to replicate this process. It is fully realized that many other values can be used here and depending on hardware implementation. The values here are meant to be non-limiting. If the variance computed in step **4** is less than the variance threshold, 0.06% of full scale or less than the offset percentage, 10% of the offset average computed in step **3**, and the DC offset computed in step **1** is less than the noise ceiling, 3% of full scale, of the mobile device **100**. After initialization is complete, decoding engine **110** can proceed to process the incoming signals to detect the swipe of the card. Otherwise, Steps 1-4 need to be repeated.

The flowchart **1400** continues to block **1404** where decoding engine **110** detects the card swipe once the incoming signals are in a steady state. This signal detection phase processes the incoming signals in steady state in order to detect the presence of a swipe of a card through the card reader. The signal detection phase is a light-weight procedure that operates at near real time. It parses the incoming signals quickly and stitches multiple system buffers of signals together to form a signal of interest. In some embodiments, the signal detection process goes through at least the following steps:

Apply a software upscale of system buffers of the incoming signals.

Begin taking buffers of incoming signals and look for points that exceed a minimum signal amplitude threshold, which is a hardware-based parameterization found empirically.

Set a flag that triggers the detection of a swipe once a single point that exceeds the threshold is detected.

Once the flag triggered, the incoming signal is appended to a larger buffer until the signal drops below a minimum signal amplitude threshold for a certain period of time, e.g., 10 ms.

Trim the last 10 ms of data to reduce the amount of signal data to be processed later.

Check to see if at least a certain number of samples have been collected in the buffer to make sure that there are enough information for later decoding. This number is parameterized based on the hardware of the mobile device used.

Alternatively, a hardware independent swipe detection process can be utilized to capture the signal of interest via Fast Fourier Transform (FFT), while trimming the front and back of the signal. Such process would include at least the following steps:

Retrieve system buffers of incoming signals and keep a certain number of buffers of history of the signals.

Compute the frequency distribution of the signal history kept via FFT.

Locate two maxima in the histogram and check if one maximum is located at 2× the frequency of the other maximum. If this condition is satisfied, continue to add on buffers of history that exhibit such behavior.

Once such behavior has stopped, begin removing signals from the beginning and ending of the signals in the buffers until SNR is maximized, wherein SNR is defined to be the two maxima's amplitudes that are greatest from the next maximum.

The flowchart **1400** continues to block **1406** once a card swipe is detected to be present where decoding engine **110** identifies peaks in the incoming signals. Peak detection is the most complex portion of decoding of incoming signals from credit card swipes, and credit card swipe decodes have traditionally not been done on heavily filtered signals like the signal that enters through the TRS plug, since most mobile device manufacturers assume the incoming signal is audio based. This results in a wide variety of signal filtering that peak detection must account for. Different peak detection approaches discussed below can be utilized by the microprocessor to perform peak detection in the incoming signals in different ways, all applying a basic, moving average low-pass filter to smooth out some of the high frequency noise in order to overcome the low quality data read, sampling speed limitations of the mobile device, and the noise introduced into the mobile device.

Reactive Peak Detection

Reactive peak detection is a heuristics based approach for peak detection, which is well suited for situations where the incoming signals from the card swipe is not excessively distorted by the mobile device's filter circuitry. This approach utilizes at least the following steps to detect signal peaks:

Seed an adaptive positive and adaptive negative threshold with an ambient noise value that is dependent on the hardware of the mobile device. These thresholds will be used for initial peak detection.

Begin processing through the sample buffer, and for each sample in the buffer:

Wait for the threshold to be crossed again when either the negative or positive threshold is crossed, except with a hysteresis factor applied to the threshold for the second crossing. The hysteresis factor is key in making this approach resistant to ringing in the incoming signals, which is associated with the active filter(s) of the platform hardware.

Begin looking for slope changes within this time frame once the two samples where the threshold is crossed have been established.

If more than one slope change is found, compute the midpoint of the two samples.

If only a single slope change is detected, then

Pick the maximum point for the slope change.

Compare the peak's amplitude to the previously found peak's amplitude (if this has been established).

Skip the current peak and move on if its amplitude is greater than (([full scale]−[current peak amplitude])/([full scale]*100)+100)% of the previous peak's amplitude.

If the prior step did not result in skipping of the peak, check the peak's polarity against the previous peak's polarity.

If the peak's polarity is the same as the previous peak's polarity, then remove the previous peak and put the current peak in its place.

If the polarity of the current peak has changed, then simply add the current peak to the list of peaks. This step is another key component for making this approach resistant to ringing.

Upon the finding of a peak, update the adaptive threshold of the corresponding polarity as the polarity of the peak just found and the amplitude to be a percentage of this peak's amplitude. Here, the percentage is a parameter varied by the detection approach being used, since higher values more accurately detects peaks, but are not as resistant to noise, while lower values are more resistant to noise, but may pick up errant peaks associated with ringing.

Predictive Peak Detection

Predictive peak detection defers the heavy processing to the digitizing stage of decoding. Predictive peak detection is highly resistant to scratches in the card that could cause low quality or false peak information to manifest in the incoming signals. This approach is more memory intensive than the reactive peak detection approach since more peaks are stored. The approach utilizes at least the following steps to detect signal peaks:

Seed a positive and adaptive negative threshold with an ambient noise value that is dependent on the hardware of the mobile device.

Begin going through the sample buffer. For each sample in the buffer:

Begin waiting for the slope to change when either the positive of negative threshold is crossed.

When the slope changes, store the current sample as a peak.

Maxima Peak Detection

Maxima peak detection detects peaks by looking for local maxima and minima within a window of digital samples. If either of these is at the edges of the window of samples, then the approach skips the window and moves to the next window to look for local maxima and minima. These local maxima and minima are then stored into a list of peaks.

The flowchart **1400** continues to block **1408** where decoding engine **110** identifies the track from which data of the incoming signals are read through the swipe of the card via the card reader. Traditionally, track 1 and track 2 came off of different pins on the read head of a card reader, and so there was no need to guess which track is being read. Since read head **16** in card reader is capable of reading only one track of data from the magnetic stripe, track identification becomes an important issue. This track identification process is run by detection engine **110** after peaks are detected to guess and recognize the track (track 1 or track 2) from which the data is read by card reader by inferring a range of peaks to be expected for signals coming from each track. Since track 1 is known to be much denser in data than track 2, it is thus reasonable to expect more peaks to be identified in data coming from track 1. Although this process is not a definitive guess, it yields the correct track value 99.9% when coupled with the peak detection algorithms described herein in testing. Alternatively, track guessing can be based on the number of bits found in the digital signals after the digitizing stage of decoding. When a decoder fails due to guessing the wrong track (since track identification affects how the bits from the digital signals are framed and matched against character sets), the decoder may simply choose another track type, though this makes the card processing more processor intensive.

The flowchart **1400** continues to block **1410** where decoding engine **110** digitizes the identified peaks in the incoming signals into bits. The digitizing process takes the given peak information turns them into binary data and appends them to an array of digital bits. There are two types of digitizers: reactive digitizing and predictive digitizing.

Reactive Digitizing

Reactive digitizing takes the given peak information as fact, and attempts to convert them into 1s and 0s in the following steps:

Go through all peak information. For each peak:

Identify the distance between each pair of adjacent peaks.

If these distances are similar (e.g., based on a parameter for finding a series of peaks that are equidistant from each other), begin looking for 1s and 0s. The initial peaks always represent zeros, since the credit card is padded with zeros at the front and back of the signal.

Once equidistant peaks are found, identify the number of samples between peaks, which is the number of samples that roughly equate to a bit.

Examine the number of samples between the current peak and the next peak.

Examine the number of samples between the current peak and the peak after the next.

Compare the results from Steps **5** and **6** against the value from Step **4**:

If the result from Step **5** is closer to the value from Step **4**, then identify the bit found as a 0.

If the result from Step **6** is closer, then identify the bit found as a 1.

Tie breaking: if the distances are equal and the next two peak amplitudes are smaller than the current peak amplitude, then identify the bit found as a 1. Otherwise, identify the bit found as a 0.

Once the peak is determined, update the bit length based on the peak found: if the peak found was a 0, update with the value of Step **5**; otherwise, use the value of step **6**.

Predictive Digitizing

Predictive digitizing of detected peaks in the incoming signals does not treat the list of peaks as facts. It first finds bit length, and then seeks to a point in the peak list where the next relevant peak should be. Once it reaches this location, it then searches before and after the location for the nearest peak. The process then checks the polarity of this peak compared to the previous peak examined. If the polarities are the same, the bit found is identified as a 1. Otherwise, it is identified as a 0. This method of digitizing a peak list is effective in that it simply ignores any information that is likely irrelevant.

The flowchart **1400** ends at block **1412** where decoding engine **110** converts the array of digitized bits into words of card information. This converting process locates the bit sequence that is the start sentinel in the array. At that point, it takes frames of bits (e.g., 5 bits for track 2, 7 bits for track 1) and decodes them based on a symbol table. Along the way, the process constantly checks for parity and the LRC at the end to ensure the data is correct. If there are any errors in parity, LRC, or track length, blocks **1406-1412** may be repeated with a different set of parameters to get the correct signal data.

When a card swipe begins, decoding engine **110** can combine various peak detectors and digitizers discussed above in order to cover various ranges of degradation in quality of the analog input signal generated by card reader **10**. In some embodiments, different process combinations and parameters can be chosen and optimized depending on the hardware platform of the mobile device. These combinations and parameter values can be pre-determined based on experimentation and testing and initialized upon starting of the decoding process. The decoding then runs through all processes specified and runs certain specific processes multiple times in order to get the correct signal. Such decoding process allows automatic scaling and adjustment during each run to account

for different amounts of noise, sampling speed variations, signal ringing, and swipe direction.

Card Present Transaction without Information Sharing

In the example of FIG. **1**, user interaction engine **120** is a software application running on mobile device **100** associated with a payee (merchant) that enables the payer (buyer) and the merchant to interact with transaction engine **130** to complete a financial transaction. More specifically, it may take input of information related to the financial transaction from the buyer and/or the merchant, provide such input to transaction engine to initiate and complete the transaction, and present the result of the transaction to the buyer and the merchant. Here, the input of information accepted by user interaction engine **120** may include but is not limited to one or more of: amount of the transaction, including list price and optionally tips, additional notes related to the transaction such as written description and/or pictures of the item to be purchased, authorization and/or signature of the buyer.

In some embodiments, other than the conventional keyboard, user interaction engine **120** may utilize a touch screen of mobile device **100** to enable the buyer and the merchant to input numbers, characters, and signatures by touching the screen via a stylus or a finger.

In some embodiments, in addition to the result of the transaction, user interaction engine **120** may also present products or services provided by the merchant to the buyer in combination of one or more of text, pictures, audio, and videos, and enable the buyer to browse through the products and services on the mobile device to choose the one he/she intended to purchase. Such product information can be stored and managed in product database **150**.

In the example of FIG. **1**, transaction engine **130** takes as its input the decoded credit card information from decoding engine **110** and transaction amount from user interaction engine **120**. Transaction engine **130** then contacts third party financial institutions such as an acquiring bank that handles such authorization request, which may then communicate with the card issuing bank to either authorize or deny the transaction. If the third party authorizes the transaction, then transaction engine **130** will transfer the amount of money deducted from the account of the card holder (e.g., the buyer) to an account of the merchant and provide the transaction results to user interaction engine **120** for presentation to the buyer and the merchant. In this manner, the merchant may accept a payment from the buyer via card reader **10** and mobile device **100**.

In the example of FIG. **1**, although mobile device **100** is associated with the merchant, transaction engine **130** running on mobile device **100** protects the privacy of the buyer/payer during the card-present transaction by taking card information from the buyer directly from decoding engine **110** and do not share such information with the merchant via user interaction engine **120**. Here, the card information that are not shared with the merchant includes but is not limited to, card number, card holder's name, expiration date, security code, etc. In essence, transaction engine **130** serves as an intermediary between the buyer and the merchant, so that the buyer does not have to share his/her card information with the merchant as in a typical card-present transaction or an online transaction. Still, the buyer is able obtain an itemized receipt for the transaction completed as discussed later.

In some embodiments, although transaction engine **130** does not share card information of the buyer to the merchant, it may present identity information of the buyer, such as a picture of the buyer on record in user database **140**, with the merchant via user interaction engine **120** so that merchant can reliably confirm the identity of the buyer during the card-present transaction to prevent credit fraud.

In the example of FIG. **1**, user database **140**, product database **150**, and transaction database **160** can be used to store information of buyer and the merchant, products and services provided by the merchant, and transactions performed, respectively. Here, user information (e.g., name, telephone number, e-mail, etc.) can be obtained through online user registration and product information can be provided by the merchant, while transaction database **160** is updated every time a transaction is processed by the transaction engine **130**. Information stored can be selectively accessed and provided to the buyer and/or merchant as necessary.

In the example of FIG. **1**, transaction engine **130** communicates and interacts with the third party financial institution, user database **140**, product database **150**, and transaction database **160** over a network (not shown). Here, the network can be a communication network based on certain communication protocols, such as TCP/IP protocol. Such network can be but is not limited to, internet, intranet, wide area network (WAN), local area network (LAN), wireless network, Bluetooth, WiFi, and mobile communication network. The physical connections of the network and the communication protocols are well known to those of skill in the art.

Dynamic Receipt

In various embodiments, upon the completion of a financial transaction through, for a non-limiting example, card reader **10** connected to mobile device **100** associated with a merchant, transaction engine **130** running on the mobile device **100** can be configured to capture additional data associated with the transaction and incorporate the additional data into a dynamic receipt for the transaction, wherein in addition to transaction information typically included in a conventional receipt, the dynamic receipt may also include additional environmental information of the transaction. For non-limiting examples, the financial transaction can be an electronic transaction conducted over the Internet or a card present point-of-sale transaction where the buyer/payer makes the purchase at a store front, other "brick-and-mortar" location, or simply in presence of a merchant/payee.

In some embodiments, the additional environmental information included in the dynamic receipt may include information pertaining to the transaction environment. In one non-limiting example, a mobile device equipped with a Global Positioning System (GPS) receiver can be used to capture the coordinates/location of the transaction, and record it as a part of the information on the dynamic receipt. This way, the physical location of the point of sale (which may be different from the merchant/payee's registered address) can be recorded and used by transaction engine **120** to verify the transaction. In another non-limiting example, a mobile device equipped with a camera and/or audio and/or video recorder can be used to capture a photo and/or a video and/or an audio recording of the product or service involved in the transaction and incorporate such data or link/reference to such data into the dynamic receipt. In another non-limiting example, a mobile device with a biometric scanner can be used to scan the fingerprint or palm print of the buyer/payer and/or merchant/payee and includes at least a portion of such information in the dynamic receipt. In another non-limiting example, the mobile device can record certain information associated with the transaction in the dynamic receipt, wherein such information includes but is not limited to, how quickly the buyer swipes the card, the angle at which the card is swiped. In another non-limiting example, special characteristics of

the card being swiped, also referred to as the magnetic fingerprint of the card, can be recorded and included in the dynamic receipt.

In some embodiments, the dynamic receipt can be in electronic form that can be accessed electronically or online and may also include link or reference pointing to multimedia information such as image, video or audio that are relevant to the transaction.

In some embodiments, transaction engine **130** can use the environmental information included in the dynamic receipt to assess risk associated with a transaction. For a non-limiting example, if the GPS information indicates that the transaction is taking place in a high crime/high risk area, the risk associated with the transaction is adjusted accordingly, and the buyer's bank may be notified accordingly. Alternatively, biometric information scanned and included in the dynamic receipt can be used for identity verification purposes to prevent identity theft and credit fraud.

In some embodiments, transaction engine **130** can use the dynamic receipt can be used as a non-intrusive way to communicate with the buyer and/or the merchant. For a non-limiting example, the additional information included in the dynamic receipt can be used to make offers to the buyer. If a dynamic receipt includes the GPS location of the point of sale of the transaction, coupons or other promotional offers made by vendors at nearby locations can be presented to the buyer when the buyer chooses to view the receipt electronically online. Alternatively, if a specific product involved the transaction can be identified by the transaction engine either directly through product description or indirectly by analyzing pictures or videos taken, offers of similar or complementary products can be made by a vendor to the merchant of the product.

In some embodiments, transaction engine **130** may notify buyer and/or the merchant of the receipt via an electronic message, which can be but is not limited to, an email message, a Short Message Service (SMS) message, Twitter®, or other forms of electronic communication. The recipient of the electronic message may then retrieve a complete itemized dynamic receipt online at his/her convenience via a telephone number on his/her record in user database **140** to retrieve his/her electronic receipts stored in transaction database **160**. In some embodiments, the electronic message may include an indication such as a code that the recipient can use to retrieve the electronic receipt online as an alternative or in combination with the telephone number.

In some embodiments, transaction engine **130** may notify buyer and/or the merchant of the receipt via an electronic message, which can be but is not limited to, an email message, a Short Message Service (SMS) message, Twitter, or other forms of electronic communication. The recipient of the electronic message may then retrieve a complete itemized dynamic receipt online at his/her convenience via a telephone number on his/her record in user database **140** to retrieve his/her electronic receipts stored in transaction database **160**. In some embodiments, the electronic message may include an indication such as a code that the recipient can use to retrieve the electronic receipt online as an alternative or in combination with the telephone number.

FIG. **15** depicts a flowchart of an example of a process to support financial transaction between a payer and a payee through a miniaturized card reader connected to a mobile device. In the example of FIG. **15**, the flowchart **1500** starts at block **1502** where an amount of a financial transaction is provided through an interactive user application launched on the mobile device as shown in FIG. **16**(*a*). The flowchart **1500** continues to block **1504** where a miniaturized card reader structured to minimize swipe error is connected to the mobile device as shown in FIG. **16**(*b*). The flowchart **1500** continues to block **1506** where a card is swiped through the card reader to initiate the financial transaction as shown in FIG. **16**(*c*). The flowchart **1500** continues to block **1508** where the payer confirms the amount of the card-present transaction via a signature signed via the interactive user application on the mobile device to complete the transaction as shown in FIG. **16**(*d*). Note that the signature is required as an additional layer of confirmation for the protection for the payer even when such signature may not be technically required to authorize the transaction. The flowchart **1500** continues to block **1510** where result of the transaction is received and presented to the payer and/or merchant as shown in FIG. **16**(*e*). The flowchart **1500** ends at block **1512** where an electronic receipt of the transaction is provided to the payer in the form of an electronic message as shown in FIG. **16**(*f*).

In one embodiment, a longitudinal plane of the of the output jack **18** lies within the plane that the card travels in the slot **14** within 5 mm, and in another embodiment within 3 mm.

Referring now to FIG. **17**, in one embodiment of the present invention an integrated read head system includes mobile device **212** with an audio jack **214** at least one microphone input port **216**. A read head **218** is physically coupled to the mobile device **212**. The read head **218** has a slot **220** for swiping a magnetic stripe of a financial transaction card to enable a financial transaction between a buyer and seller. The read head **218** reads data on the magnetic stripe and produces a signal indicative of data stored on the magnetic stripe. The read head **218** has an output jack **222** that physically connects the read head **218** to at least one of the audio jack **214** or microphone port **216** of the mobile device **212**. The read head **218** provides the signal to the mobile device **212**. The signal is decoded at the mobile device **212**. The decoding includes determining pulses in the signal and converts at least some of the pulses to characters.

In another embodiment of the present invention, a method is provided for conducting a financial transaction with a financial transaction card using the integrated read head system **210**.

The foregoing description of various embodiments of the claimed subject matter has been provided for the purposes of illustration and description. It is not intended to be exhaustive or to limit the claimed subject matter to the precise forms disclosed. Many modifications and variations will be apparent to the practitioner skilled in the art. Particularly, while the concept "component" is used in the embodiments of the systems and methods described above, it will be evident that such concept can be interchangeably used with equivalent concepts such as, class, method, type, interface, module, object model, and other suitable concepts. Embodiments were chosen and described in order to best describe the principles of the invention and its practical application, thereby enabling others skilled in the relevant art to understand the claimed subject matter, the various embodiments and with various modifications that are suited to the particular use contemplated.

What is claimed is:

1. A read head device, comprising:

a housing;

a read head positioned in the housing, the read head being configured to be coupled to a mobile device, the read head having a slot for swiping a magnetic stripe of a financial transaction card, the slot being utilized to enable a financial transaction between a buyer and seller, the read head reading data on the magnetic stripe and producing a signal indicative of data stored on the magnetic stripe,

an output jack inserted into at least one of an audio jack or microphone input port of the mobile device for providing the signal indicative of data stored on the magnetic stripe to the mobile device;

passive ID circuitry in the read head or coupled to the read head to deliver a unique ID of the read head to the mobile device;

wherein the slot is configured to maintain contact between the read head and the magnetic stripe of the financial transaction card during a swipe and decoding of the signal is performed at the mobile device, the decoding including determining pulses in the signal and converting at least some of the pulses to characters, a width of the slot being sized to enable the successful swipe without creating sufficient torque between the signal plug or output jack and the read head or at the mobile device to cause damage due to excessive torque.

* * * * *