US009003508B2

(12) **United States Patent**
Colnot et al.

(10) **Patent No.: US 9,003,508 B2**
(45) **Date of Patent: Apr. 7, 2015**

(54) **METHODS AND APPARATUS FOR ENABLING SECURE NETWORK-BASED TRANSACTIONS**

(71) Applicant: **OHVA, Inc.**, San Jose, CA (US)

(72) Inventors: **Vincent Cedric Colnot**, Milpitas, CA (US); **Ty Fellers**, Little Mountain, SC (US)

(73) Assignee: **OHVA, Inc.**, San Jose, CA (US)

(*) Notice: Subject to any disclaimer, the term of this patent is extended or adjusted under 35 U.S.C. 154(b) by 0 days.

(21) Appl. No.: **14/524,842**

(22) Filed: **Oct. 27, 2014**

(65) **Prior Publication Data**

US 2015/0047007 A1 Feb. 12, 2015

Related U.S. Application Data

(63) Continuation of application No. 11/533,030, filed on Sep. 19, 2006, now abandoned.

(60) Provisional application No. 60/719,273, filed on Sep. 20, 2005.

(51) **Int. Cl.**

H04L 29/00	(2006.01)
H04L 29/06	(2006.01)
H04L 9/32	(2006.01)

(52) **U.S. Cl.**

CPC ***H04L 63/0853*** (2013.01); ***H04L 63/083*** (2013.01); ***H04L 9/3213*** (2013.01); ***H04L 63/10*** (2013.01)

(58) **Field of Classification Search**

CPC ... H04L 63/0853; H04L 63/083; H04L 63/10; H04L 9/3213

USPC 726/10, 9; 713/184

See application file for complete search history.

(56) **References Cited**

U.S. PATENT DOCUMENTS

6,188,766	B1 *	2/2001	Kocher	380/246
6,282,653	B1 *	8/2001	Berstis et al.	726/26
6,385,729	B1 *	5/2002	DiGiorgio et al.	726/9
7,233,948	B1 *	6/2007	Shamoon et al.	1/1
7,234,059	B1 *	6/2007	Beaver et al.	713/170
7,359,883	B2 *	4/2008	Namba et al.	705/59
7,900,245	B1 *	3/2011	Geddes et al.	726/9
8,146,141	B1 *	3/2012	Grandcolas et al.	726/5
2003/0005118	A1 *	1/2003	Williams	709/225
2003/0046551	A1 *	3/2003	Brennan	713/185
2003/0065919	A1 *	4/2003	Albert et al.	713/168
2003/0177354	A1 *	9/2003	Carter	713/164
2004/0093496	A1 *	5/2004	Colnot	713/168
2004/0107356	A1 *	6/2004	Shamoon et al.	713/193
2005/0262573	A1 *	11/2005	Bo et al.	726/27

* cited by examiner

Primary Examiner — Michael Pyzocha

(74) *Attorney, Agent, or Firm* — Donald R. Boys; Central Coast Patent Agent, Inc.

(57) **ABSTRACT**

A security process involves log-in and data exchange between a server and a user operating a computerized appliance. The process requires a user-specific token, independent verification of the server execution within a programmed time window. A hash created at the client side is reproduced at the server side from separate data and compared to the client hash. Too much time or incorrect hash denies access.

8 Claims, 15 Drawing Sheets

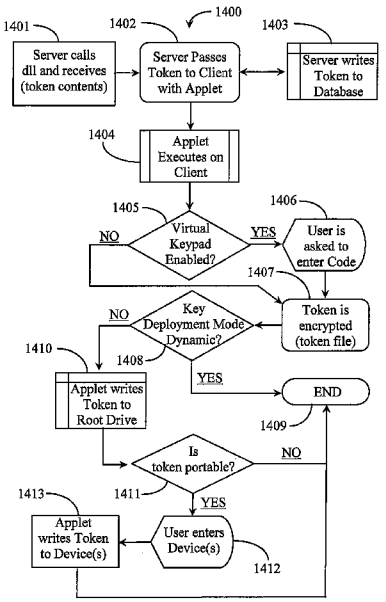

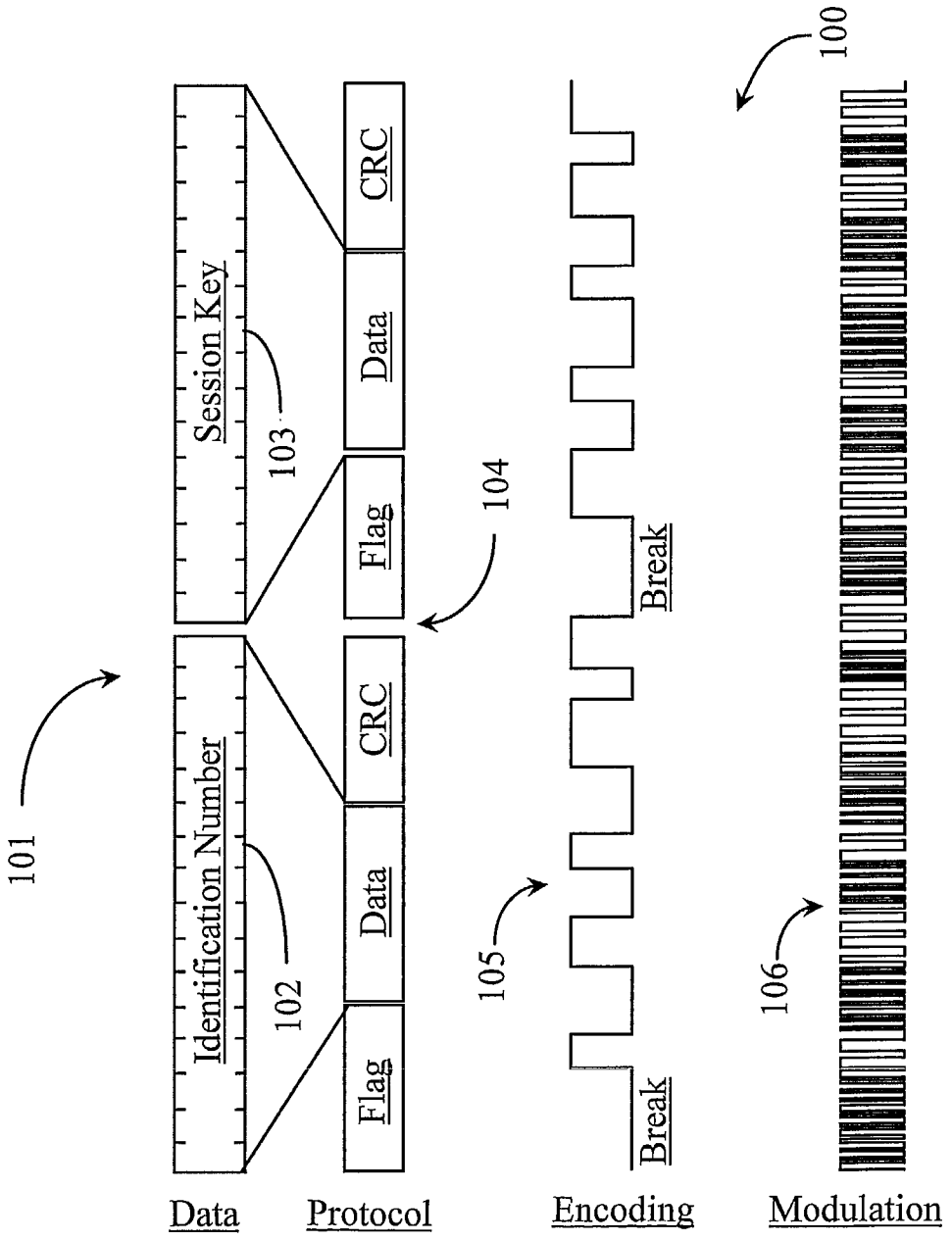
100
101
Identification Number
Session Key
102
103
Flag
Data
CRC
Flag
Data
CRC
104
105
Break
Break
106
Data
Protocol
Encoding
Modulation

Fig. 1

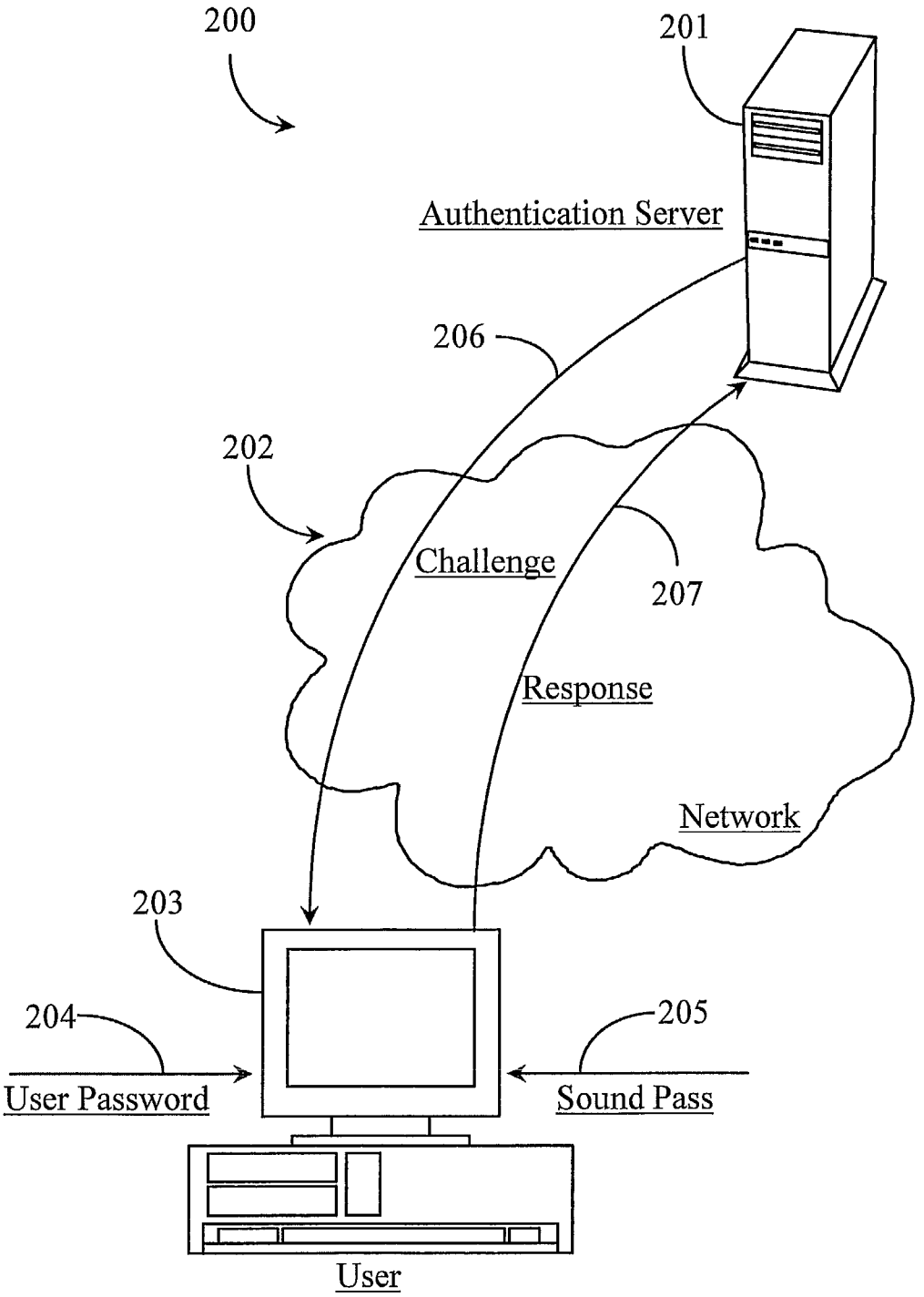
200
201
Authentication Server
206
202
Challenge
207
Response
Network
203
204
205
User Password
Sound Pass
User

Fig. 2

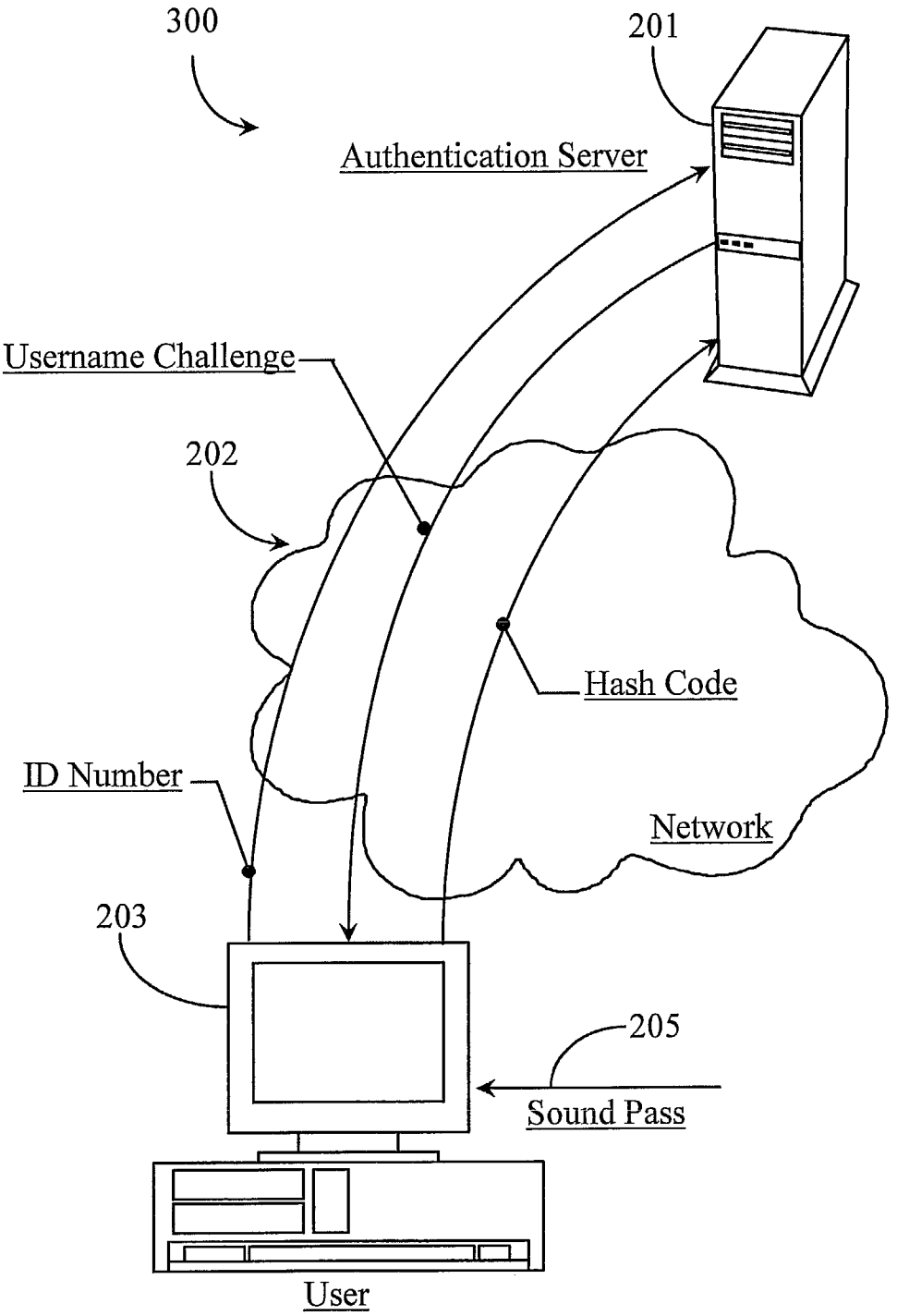
300
201
Authentication Server
Username Challenge
202
Hash Code
ID Number
Network
203
205
Sound Pass
User

Fig. 3

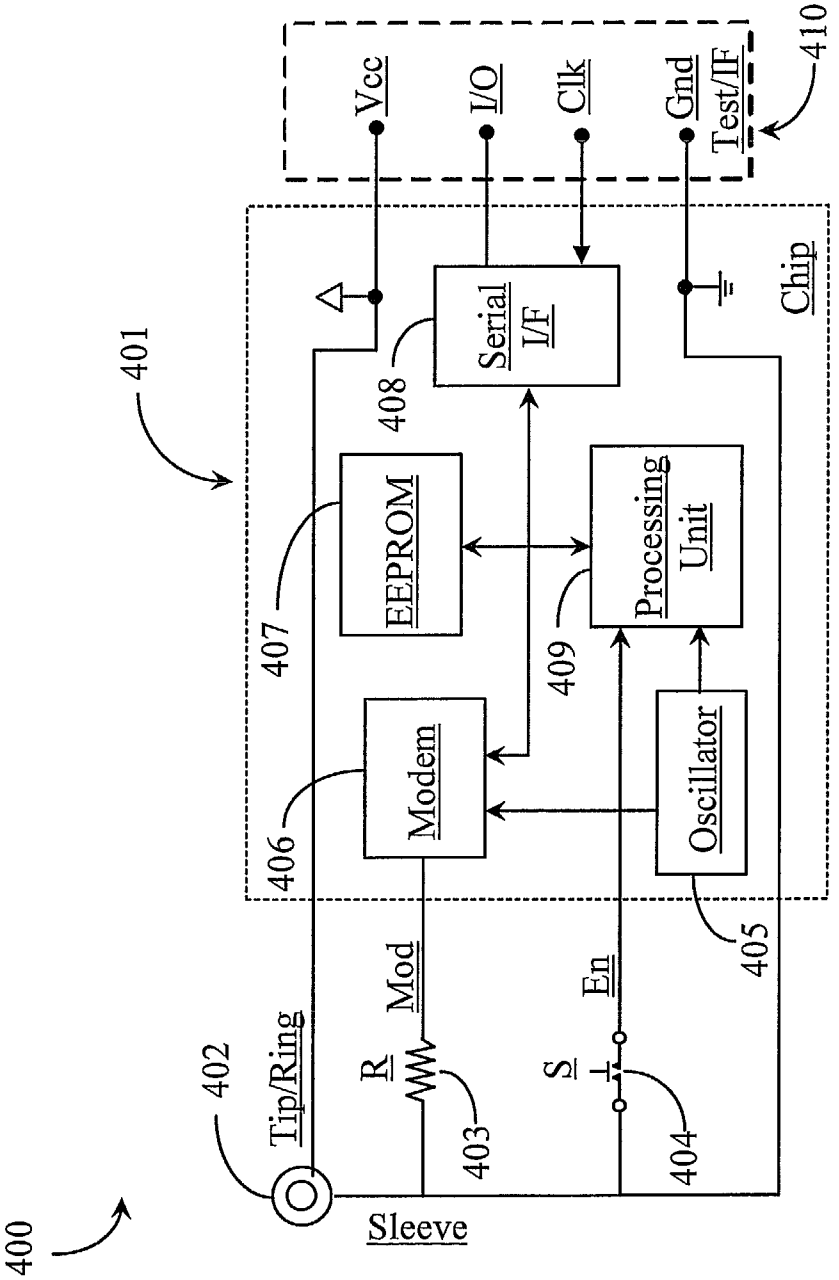
400
401
402
Tip/Ring
Sleeve
403
R
Mod
404
S
En
405
Oscillator
406
Modem
407
EEPROM
408
Serial I/F
409
Processing Unit
Chip
Vcc
I/O
Clk
Gnd
Test/IF
410

Fig. 4

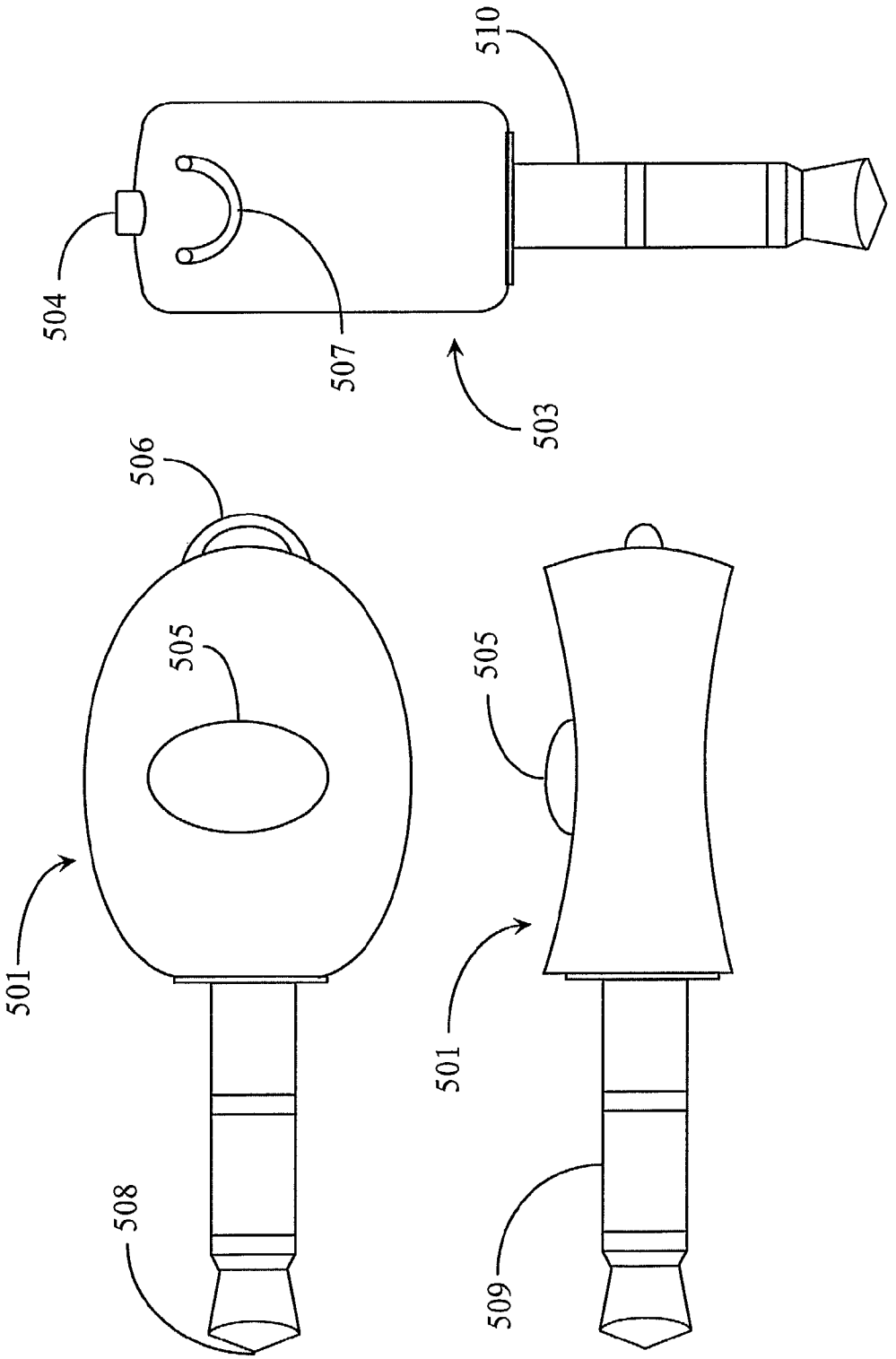

Fig. 5

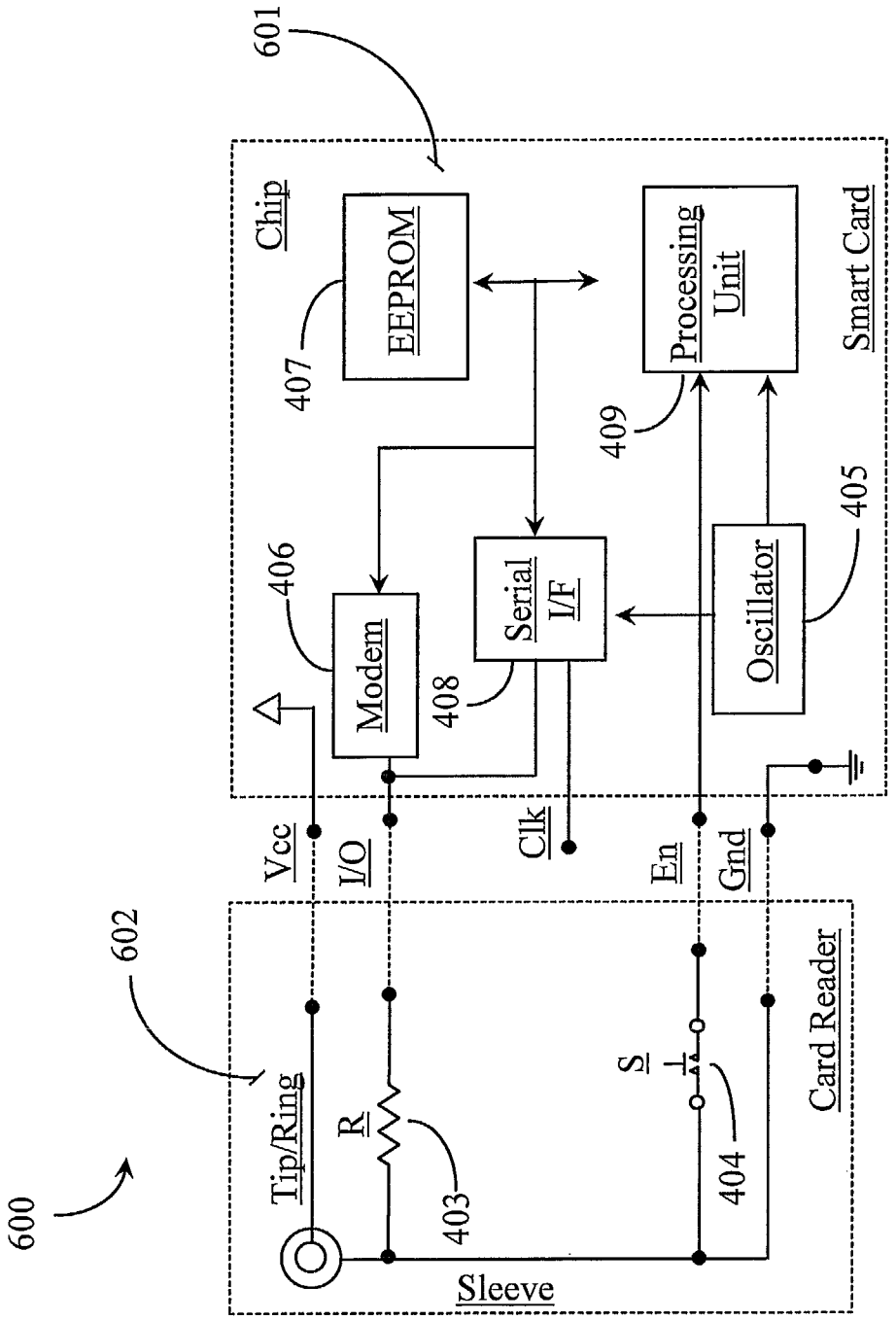
600
602
601
Chip
EEPROM
407
Processing Unit
409
Smart Card
Modem
406
Serial I/F
408
Oscillator
405
Vcc
I/O
Clk
En
Gnd
Tip/Ring
R
403
S
404
Card Reader
Sleeve

Fig. 6

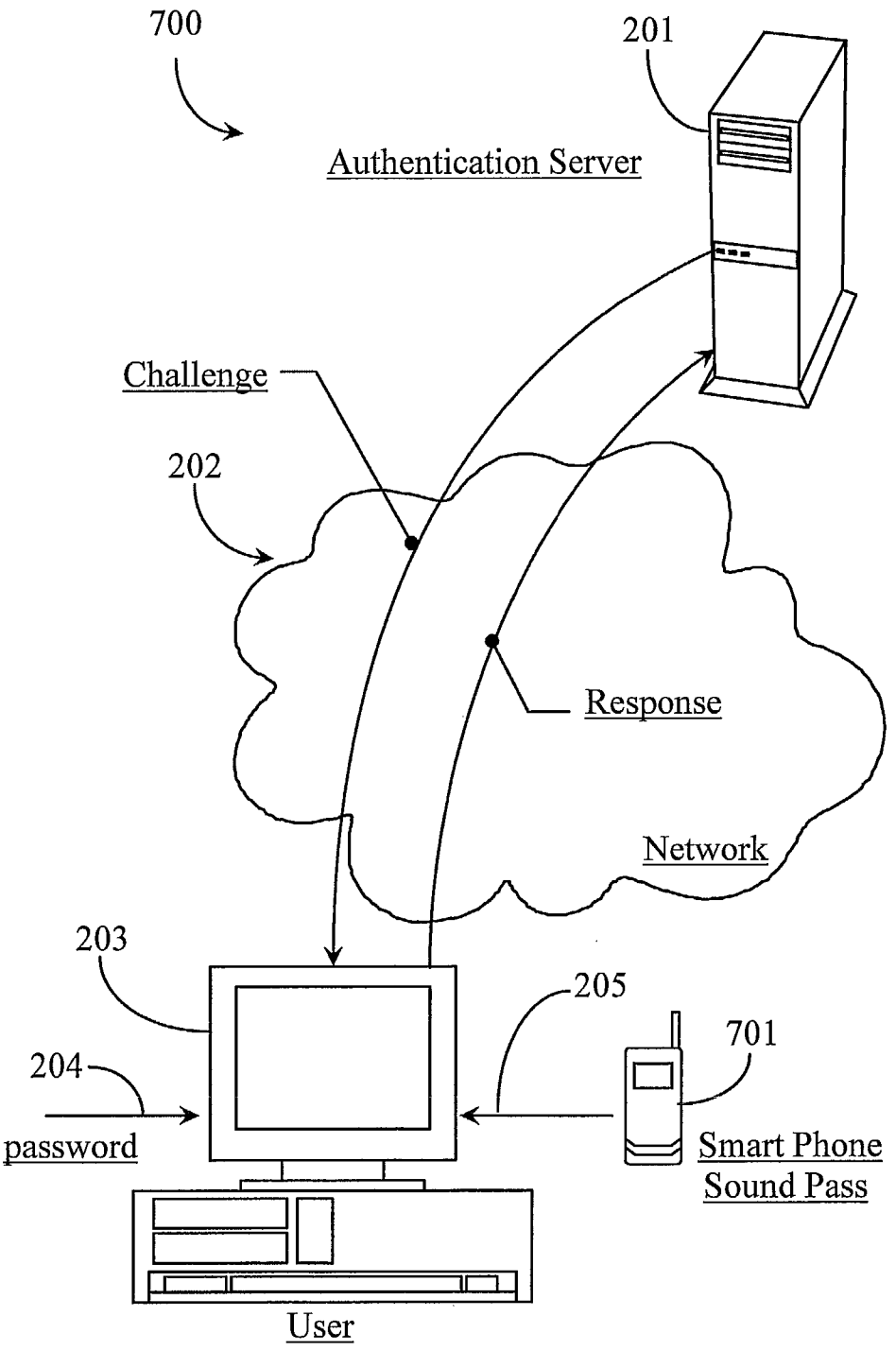
700
201
Authentication Server
Challenge
202
Response
Network
203
205
701
204
password
Smart Phone
Sound Pass
User

Fig. 7

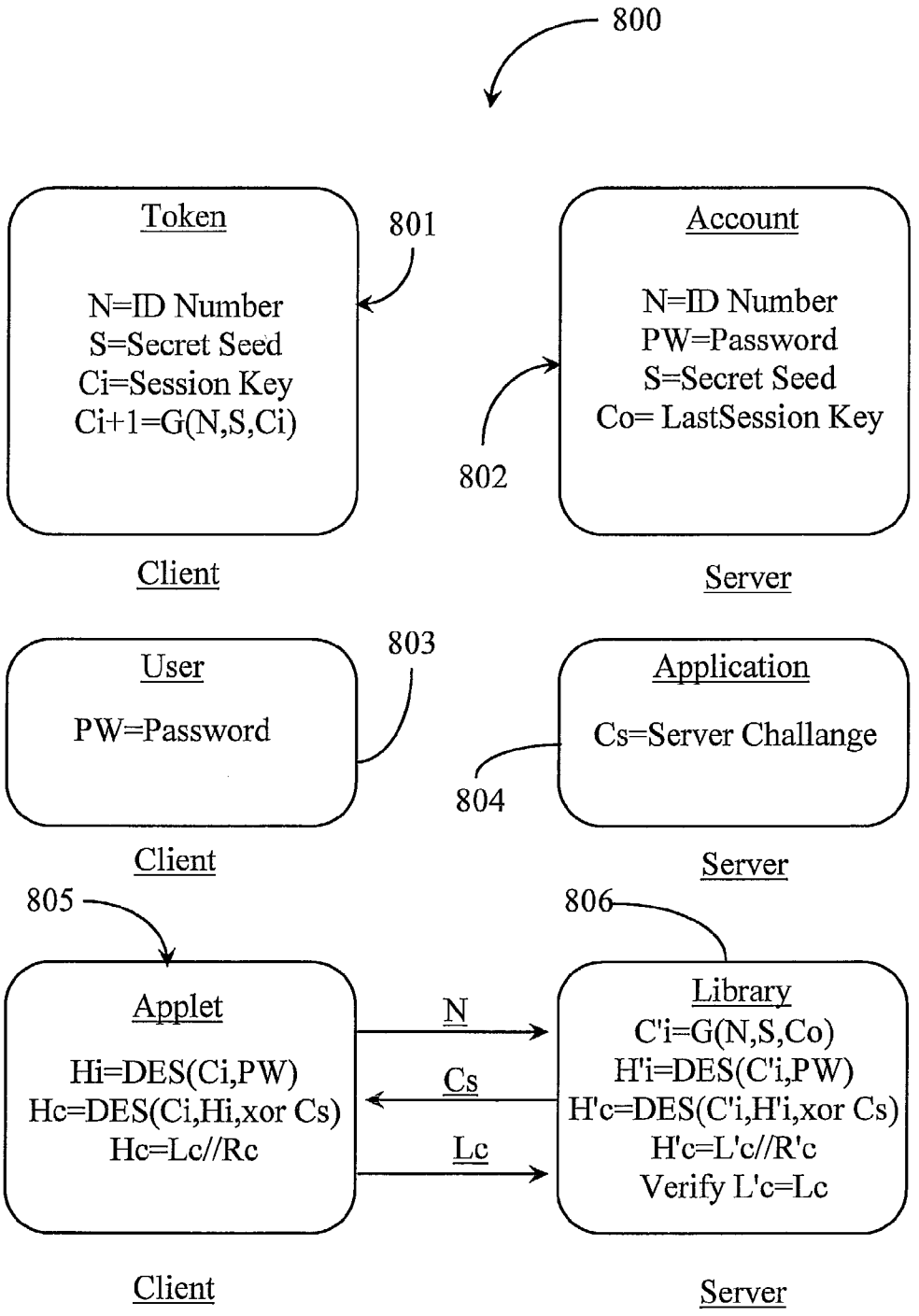
800
Token
N=ID Number
S=Secret Seed
Ci=Session Key
Ci+1=G(N,S,Ci)
801
Account
N=ID Number
PW=Password
S=Secret Seed
Co= LastSession Key
802
Client
Server
User
PW=Password
803
Application
Cs=Server Challange
804
Client
Server
805
806
Applet
Hi=DES(Ci,PW)
Hc=DES(Ci,Hi,xor Cs)
Hc=Lc//Rc
N
Cs
Lc
Library
C'i=G(N,S,Co)
H'i=DES(C'i,PW)
H'c=DES(C'i,H'i,xor Cs)
H'c=L'c//R'c
Verify L'c=Lc
Client
Server

Fig. 8

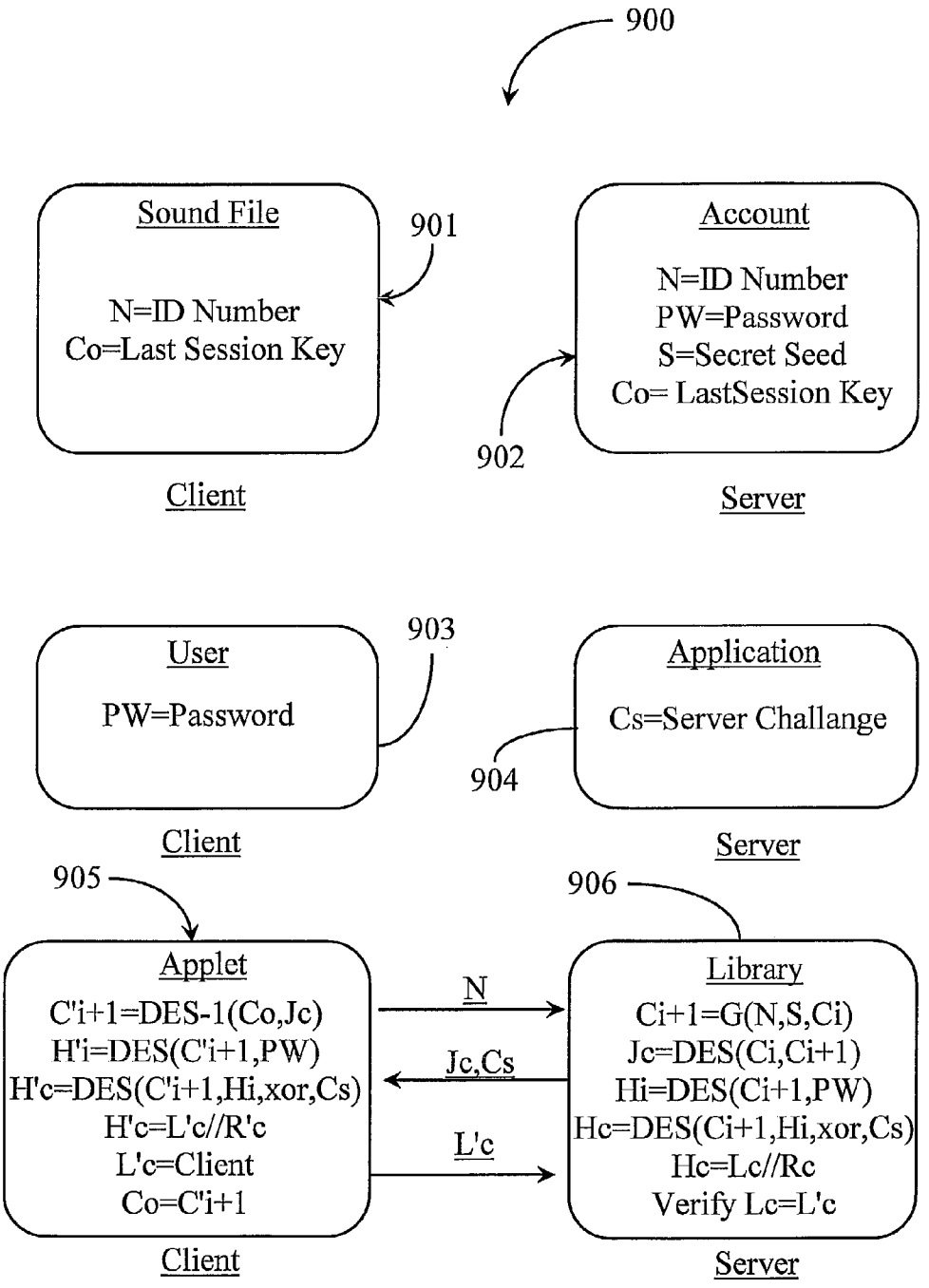
900
Sound File
N=ID Number
Co=Last Session Key
901
Account
N=ID Number
PW=Password
S=Secret Seed
Co= LastSession Key
902
Client
Server
User
PW=Password
903
Application
Cs=Server Challange
904
Client
Server
905
906
Applet
C'i+1=DES-1(Co,Jc)
H'i=DES(C'i+1,PW)
H'c=DES(C'i+1,Hi,xor,Cs)
H'c=L'c//R'c
L'c=Client
Co=C'i+1
N
Jc,Cs
L'c
Library
Ci+1=G(N,S,Ci)
Jc=DES(Ci,Ci+1)
Hi=DES(Ci+1,PW)
Hc=DES(Ci+1,Hi,xor,Cs)
Hc=Lc//Rc
Verify Lc=L'c
Client
Server

Fig. 9

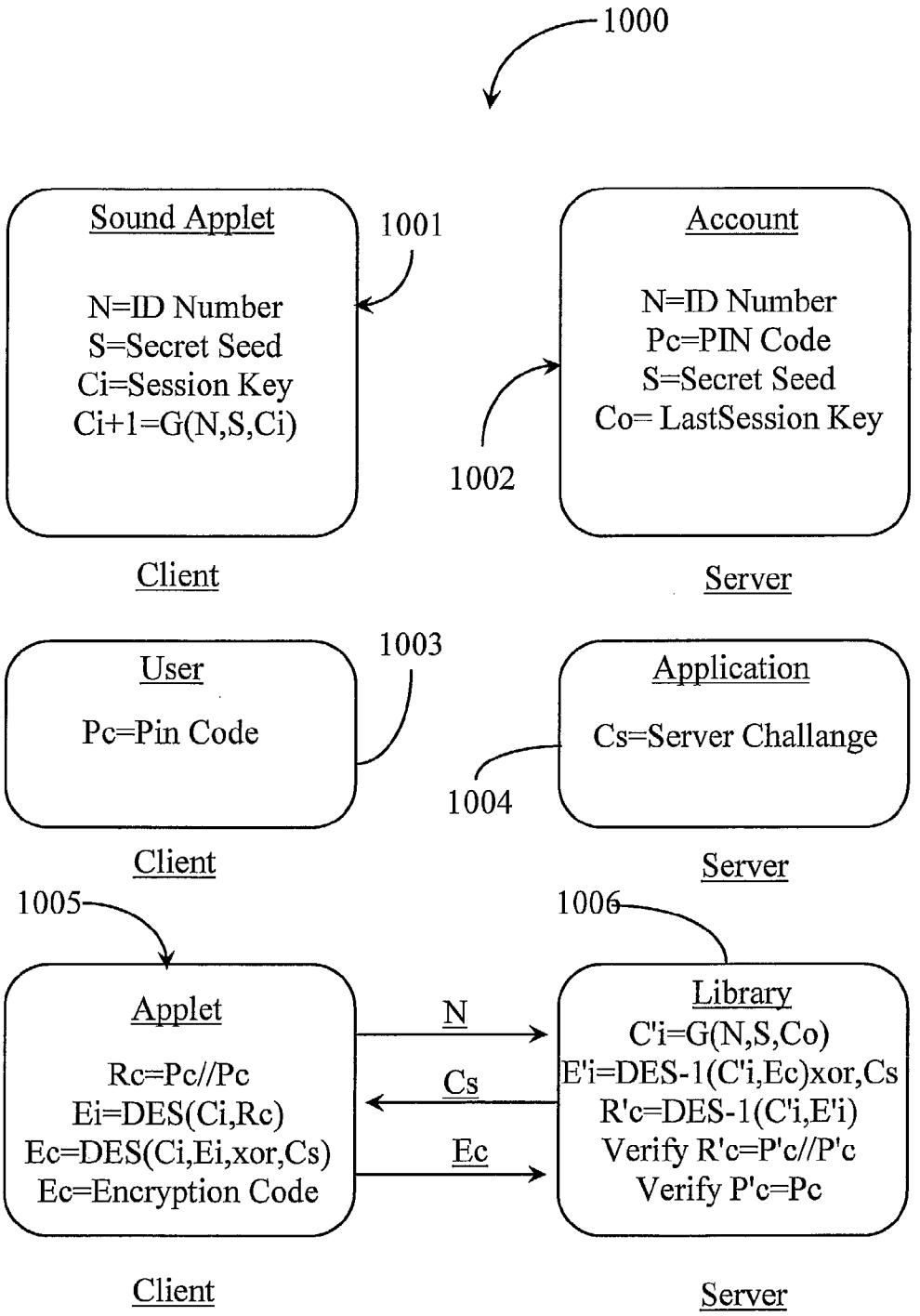
1000
Sound Applet
N=ID Number
S=Secret Seed
Ci=Session Key
Ci+1=G(N,S,Ci)
1001
Account
N=ID Number
Pc=PIN Code
S=Secret Seed
Co= LastSession Key
1002
Client
Server
User
Pc=Pin Code
1003
Application
Cs=Server Challange
1004
Client
Server
1005
1006
Applet
Rc=Pc//Pc
Ei=DES(Ci,Rc)
Ec=DES(Ci,Ei,xor,Cs)
Ec=Encryption Code
N
Cs
Ec
Library
C'i=G(N,S,Co)
E'i=DES-1(C'i,Ec)xor,Cs
R'c=DES-1(C'i,E'i)
Verify R'c=P'c//P'c
Verify P'c=Pc
Client
Server

Fig. 10

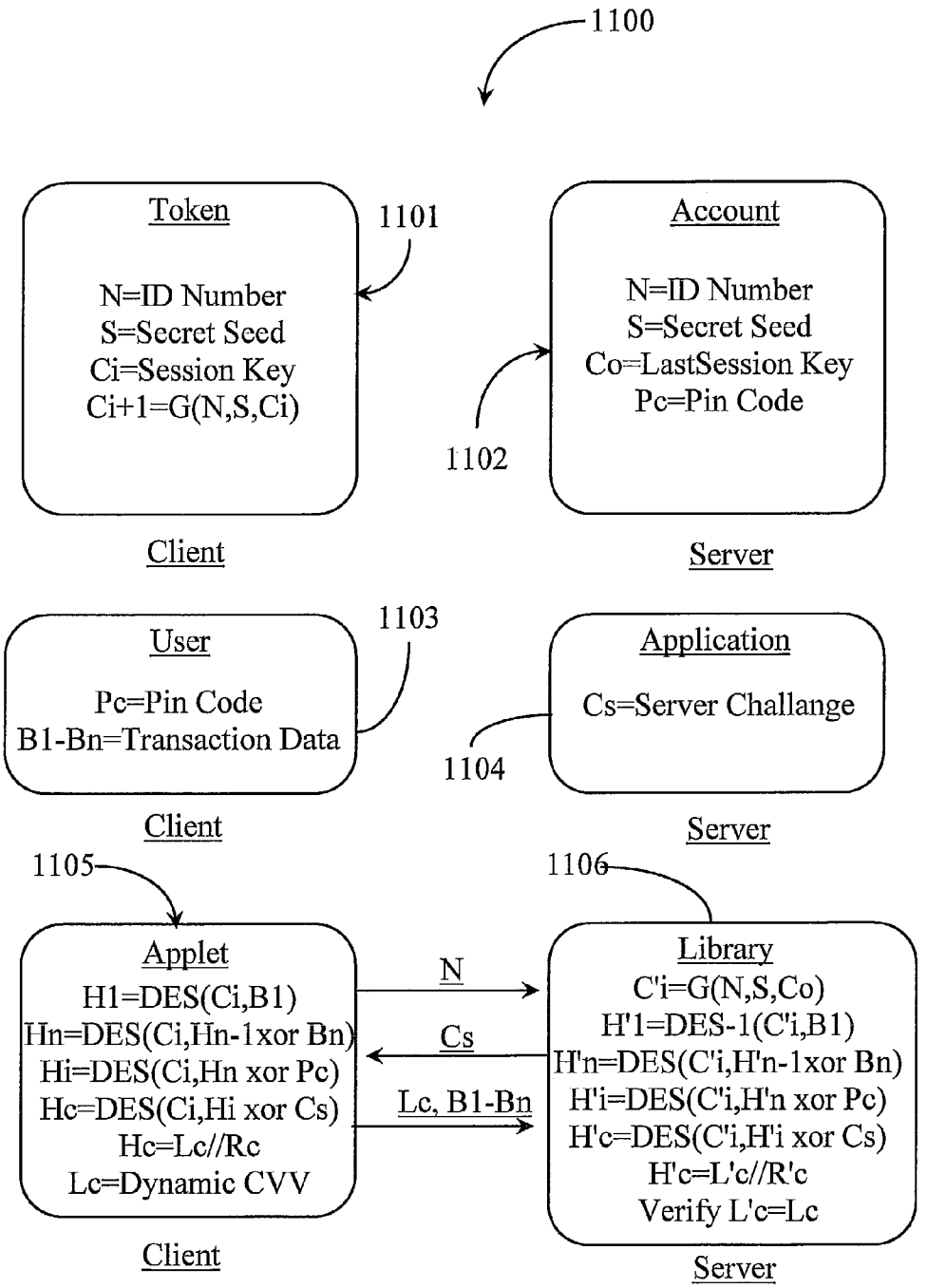
1100
Token
N=ID Number
S=Secret Seed
Ci=Session Key
Ci+1=G(N,S,Ci)
1101
Account
N=ID Number
S=Secret Seed
Co=LastSession Key
Pc=Pin Code
1102
Client
Server
User
Pc=Pin Code
B1-Bn=Transaction Data
1103
Application
Cs=Server Challange
1104
Client
Server
1105
1106
Applet
H1=DES(Ci,B1)
Hn=DES(Ci,Hn-1xor Bn)
Hi=DES(Ci,Hn xor Pc)
Hc=DES(Ci,Hi xor Cs)
Hc=Lc//Rc
Lc=Dynamic CVV
N
Cs
Lc, B1-Bn
Library
C'i=G(N,S,Co)
H'1=DES-1(C'i,B1)
H'n=DES(C'i,H'n-1xor Bn)
H'i=DES(C'i,H'n xor Pc)
H'c=DES(C'i,H'i xor Cs)
H'c=L'c//R'c
Verify L'c=Lc
Client
Server

Fig. 11

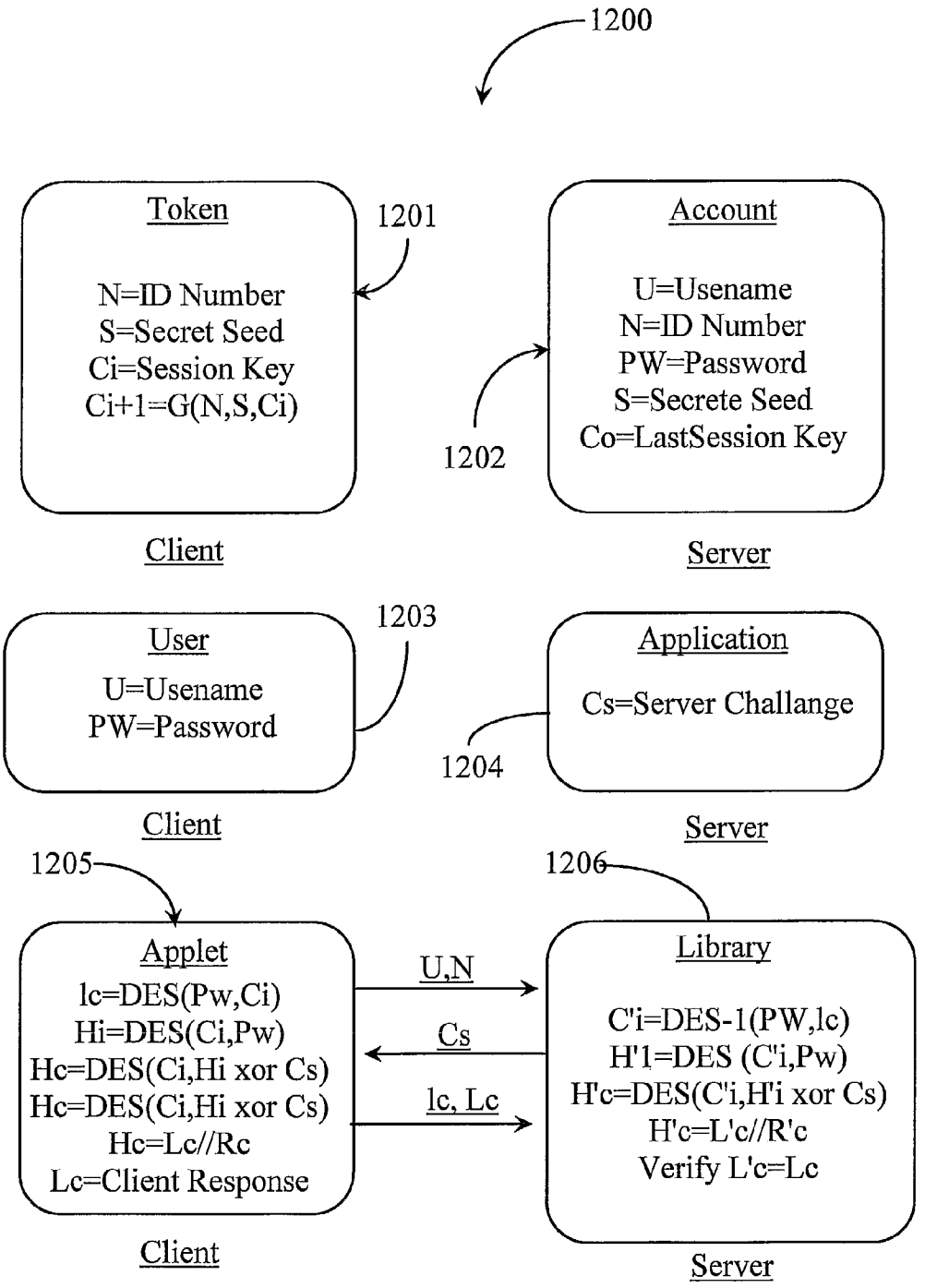
1200
Token
N=ID Number
S=Secret Seed
Ci=Session Key
Ci+1=G(N,S,Ci)
1201
Account
U=Username
N=ID Number
PW=Password
S=Secrete Seed
Co=LastSession Key
1202
Client
Server
User
U=Usename
PW=Password
1203
Application
Cs=Server Challange
1204
Client
Server
1205
1206
Applet
Ic=DES(Pw,Ci)
Hi=DES(Ci,Pw)
Hc=DES(Ci,Hi xor Cs)
Hc=DES(Ci,Hi xor Cs)
Hc=Lc//Rc
Lc=Client Response
U,N
Cs
Ic, Lc
Library
C'i=DES-1(PW,Ic)
H'1=DES (C'i,Pw)
H'c=DES(C'i,H'i xor Cs)
H'c=L'c//R'c
Verify L'c=Lc
Client
Server

Fig. 12

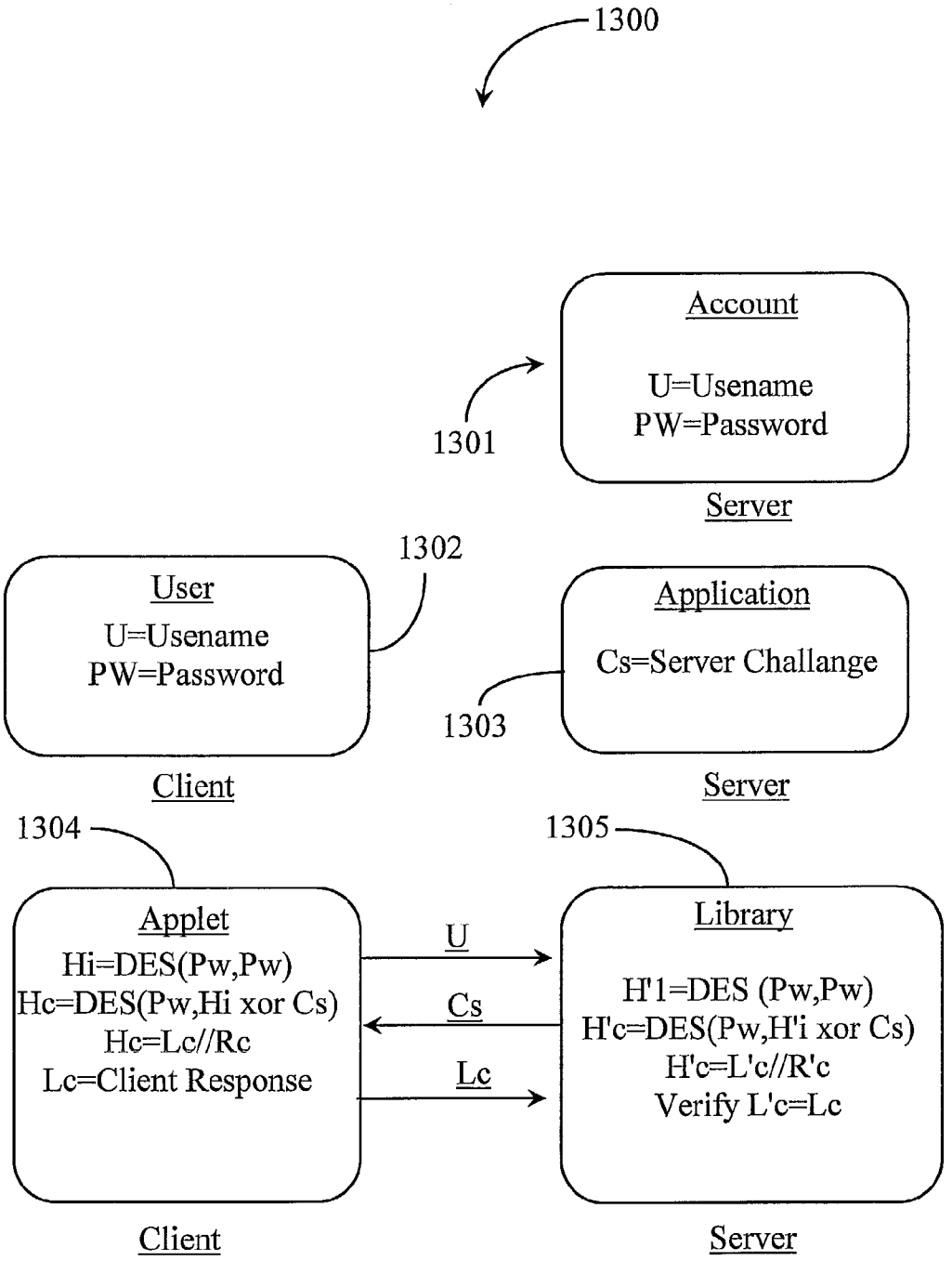
1300
Account
U=Usename
PW=Password
1301
Server
1302
User
U=Usename
PW=Password
Application
Cs=Server Challange
1303
Client
Server
1304
1305
Applet
Hi=DES(Pw,Pw)
Hc=DES(Pw,Hi xor Cs)
Hc=Lc//Rc
Lc=Client Response
U
Cs
Lc
Library
H'1=DES (Pw,Pw)
H'c=DES(Pw,H'i xor Cs)
H'c=L'c//R'c
Verify L'c=Lc
Client
Server

Fig. 13

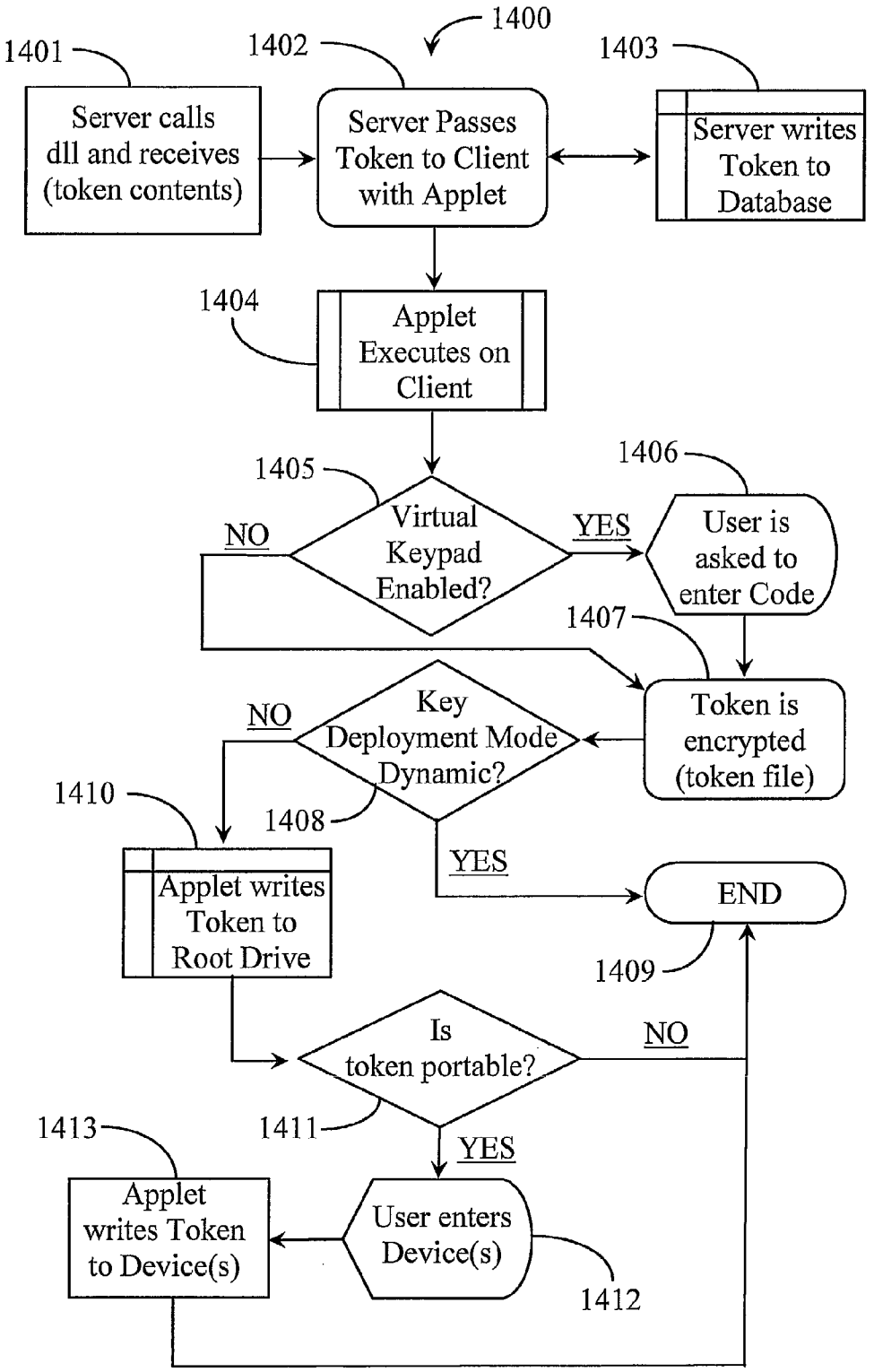
1400
1401
Server calls dll and receives (token contents)
1402
Server Passes Token to Client with Applet
1403
Server writes Token to Database
1404
Applet Executes on Client
1405
Virtual Keypad Enabled?
NO
YES
1406
User is asked to enter Code
1407
Token is encrypted (token file)
Key Deployment Mode Dynamic?
NO
1408
YES
END
1409
1410
Applet writes Token to Root Drive
Is token portable?
NO
1411
YES
1413
Applet writes Token to Device(s)
User enters Device(s)
1412

Fig. 14

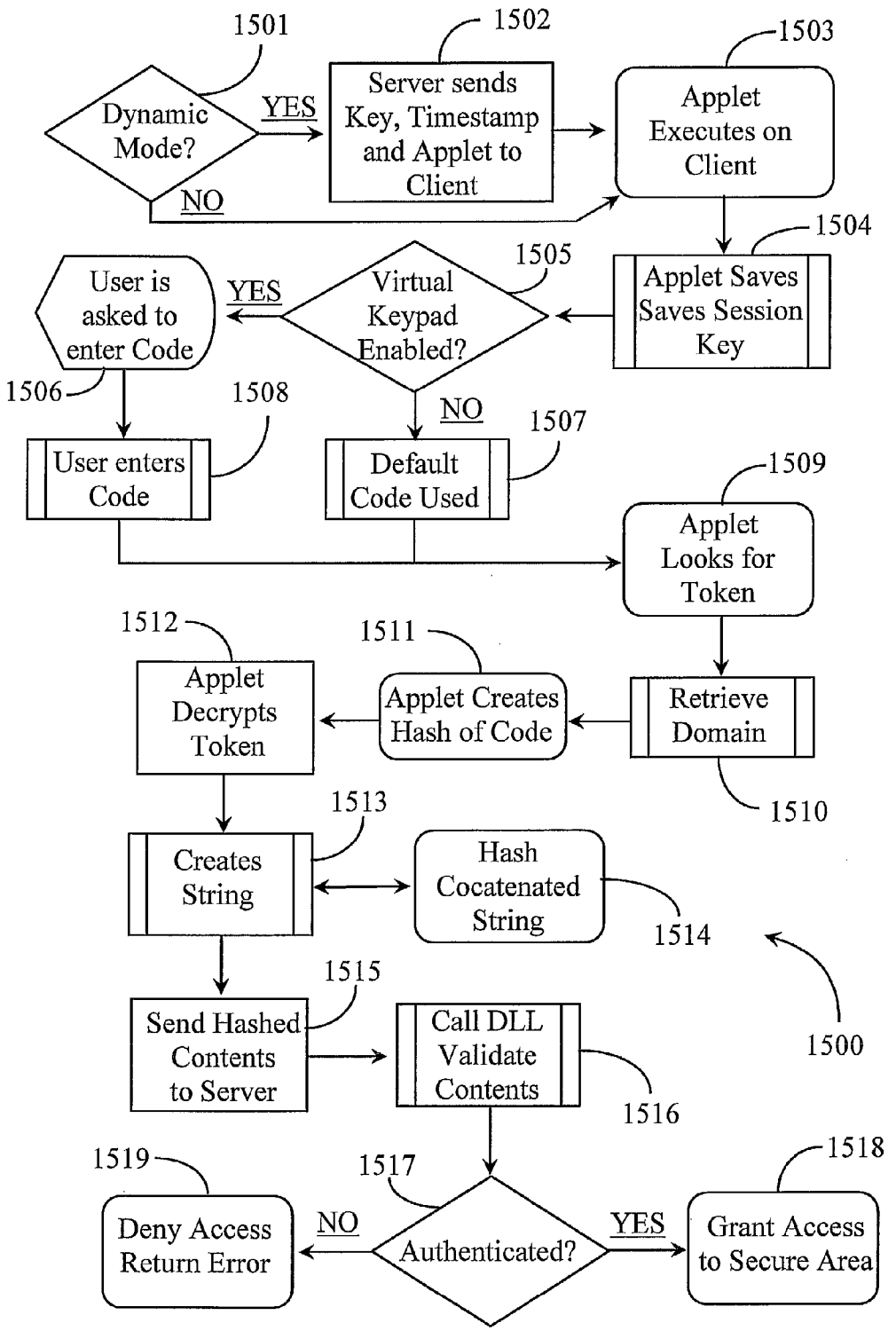
1501
Dynamic Mode?
YES
NO
1502
Server sends Key, Timestamp and Applet to Client
1503
Applet Executes on Client
1504
Applet Saves Saves Session Key
1505
Virtual Keypad Enabled?
YES
NO
User is asked to enter Code
1506
1508
User enters Code
1507
Default Code Used
1509
Applet Looks for Token
1510
Retrieve Domain
1511
Applet Creates Hash of Code
1512
Applet Decrypts Token
1513
Creates String
Hash Cocatenated String
1514
1515
Send Hashed Contents to Server
Call DLL Validate Contents
1516
1500
1517
Authenticated?
NO
YES
1519
Deny Access Return Error
1518
Grant Access to Secure Area

Fig. 15

METHODS AND APPARATUS FOR ENABLING SECURE NETWORK-BASED TRANSACTIONS

CROSS-REFERENCE TO RELATED APPLICATIONS

The present invention claims is a Continuation of U.S. application Ser. No. 11/533,030, filed Sep. 19, 2006, which claims priority to a U.S. provisional patent application Ser. No. 60/719,273 filed on Sep. 20, 2005. The referenced applications are included herein at least by reference.

BACKGROUND OF THE INVENTION

1. Field of the Invention

The present invention is in the field of electronic transactions carried out over a network connection and pertains particularly to methods and apparatus for ensuring identity security for the transaction parties.

2. Discussion of the State of the Art

Integrated circuit cards, commonly referred to as smart cards, are widely used in stores to secure electronic payments. The online market has not adopted smart cards, although they provide the best security to conduct electronic commerce. The main reasons are the high cost of the card reader and the complexity of the system for most people. Not only a card but also a reader must be provided to the millions of potential end-users who comprise this market base.

The inventor is aware of a method and apparatus to secure online transactions on the Internet. The system includes a smart card transmitting an identification sequence to a PC in the form of a modulated signal, a card reader plugged into the microphone input of the PC sound card, and a PC applet demodulating the identification sequence. The card reader is characterized by the absence of processing means.

The inventor is also aware of a secure memory device for a smart card with a modem interface. The secure memory includes a rewritable memory such as an EEPROM, a processing unit or a microprocessor, an on-chip oscillator, an ISO 7816 interface, and a one-wire modem interface. The memory is characterized in that both communication interfaces are bi-directional and share the same terminal. The modem interface is exchanging data with the host in the form of a modulated signal by means of a card reader characterized by the absence of processing means.

The inventor is further aware of a method and apparatus to secure online transactions over the phone. The method includes a smart card transmitting an identification sequence to an IVR server in the form of a modulated signal, a card reader plugged into the telephone line, and an IVR applet demodulating the identification sequence. The card reader is characterized by the absence of processing means.

What is clearly needed is improved and more secure client/server methods including transmission packaging of secure authentication over a network aided in some case by user-friendly peripherals and devices for performing secure transactions over a data-packet-network.

BRIEF SUMMARY OF THE INVENTION

In one embodiment of the invention an access security process is provided, comprising opening a connection to an interactive web site executing on a processor of an Internet-connected server by a client computerized appliance asserting a URL in a web browser, displaying a log-in mechanism to the client computerized appliance by the interactive web

site, enabling a user operating the client computerized appliance to enter log-in information, in response to a successful log-in, sending to the client computerized device, data including a time stamp of the time of the log-in, and a page location of an applet to be run by the client computerized appliance to continue the security process, through executing the applet on the client computerized device, determining the domain of the server by querying the page that includes the applet, and searching data storage devices coupled to the client computerized device for an encrypted token compatible with the security process, on finding the token, rendering a virtual keypad on a display of the client computerized appliance, enabling the user to enter a PIN known to the user for decrypting the encrypted token, if the PIN does not successfully decrypt the token, suspending the security process, in the event the PIN successfully decrypts the token, salting the decrypted token value with the time stamp and the domain by adding the domain on one end of the token string and the time stamp on the other end, and hashing the result by a specific hash function, sending the hash value of the decrypted, salted token value to the interactive web page at the server, invoking a dll at the server, retrieving a token stored at the server, salting that token with the domain of the server and the original time stamp sent to the client computerized appliance, and hashing the result by the specific hash function, comparing the hash value received from the client computerized appliance with the hash value generated by the dll at the server, and determining passage of time from the time of the original time stamp to present time, if the passage of time is greater than a preprogrammed time, or if the hash values do not match, denying access by the user at the server, and if the passage of time is within the time window and the hash values do match, granting access to the user at the server.

In one embodiment the data storage device coupled to the client's computer where the compatible token is found is a flash thumb drive. Also in one embodiment the token is unique to a client and includes an identification number, a password or personal identification code, a session key, and a secrete data seed. Also in one embodiment the software applet is a Java applet and the token is a Java archive.

In another aspect of the invention an access security system is provided, comprising an Internet-connected server coupled to a data repository and having a processor, and software executing on the processor from a non-transitory medium, the software providing a process of opening a connection to an interactive web site executing on the processor of the Internet-connected server by a client computerized appliance asserting a URL in a web browser, displaying a log-in mechanism to the client computerized appliance by the interactive web site, enabling a user operating the client computerized appliance to enter log-in information, in response to a successful log-in, sending to the client computerized device, data including a time stamp of the time of the log-in, and a page location of an applet to be run by the client computerized appliance to continue the security process, through executing the applet on the client computerized device, determining the domain of the server by querying the page that includes the applet, and searching data storage devices coupled to the client computerized device for an encrypted token compatible with the security process, on finding the token, rendering a virtual keypad on a display of the client computerized appliance, enabling the user to enter a PIN known to the user for decrypting the encrypted token, if the PIN does not successfully decrypt the token, suspending the security process, in the event the PIN successfully decrypts the token, salting the decrypted token value with the time stamp and the domain by adding the domain on one end of the token string and the time

stamp on the other end, and hashing the result by a specific hash function, sending the hash value of the decrypted, salted token value to the interactive web page at the server, invoking a dll at the server, retrieving a token stored at the server, salting that token with the domain of the server and the original time stamp sent to the client computerized appliance, and hashing the result by the specific hash function, comparing the hash value received from the client computerized appliance with the hash value generated by the dll at the server, and determining passage of time from the time of the original time stamp to present time, if the passage of time is greater than a preprogrammed time, or if the hash values do not match, denying access by the user at the server, and if the passage of time is within the time window and the hash values do match, granting access to the user at the server.

In one embodiment of the system the data storage device coupled to the client's computer where the compatible token is found is a flash thumb drive. Also in one embodiment the token is unique to a client and includes an identification number, a password or personal identification code, a session key, and a secrete data seed. And in one embodiment the software applet is a Java applet and the token is a Java archive.

BRIEF DESCRIPTION OF THE DRAWING FIGURES

FIG. **1** is a block-diagram illustrating a secure transmission package of a secure identification number and session key according to an embodiment of the invention.

FIG. **2** is an architectural overview of interaction between a user and an authentication server according to an embodiment of the present invention.

FIG. **3** is an architectural overview of interaction using the system of the invention according to another embodiment of the present invention.

FIG. **4** is a block diagram illustrating basic electronics of a key jack sound pass generator according to an embodiment of the present invention.

FIG. **5** is a plan view of design options for a key jack signal generator according to embodiments of the present invention.

FIG. **6** is a block-diagram illustrating basic electronics of a smart card signal generator coupled to a card reader according to another embodiment of the present invention.

FIG. **7** is an architectural overview of interaction using the system of the invention including authentication server and a mobile device for signal generation according to yet another embodiment of the present invention.

FIG. **8** is a block diagram illustrating user authentication and generation of a new session key by the token for use according to an embodiment of the present invention.

FIG. **9** is a block diagram illustrating user authentication and update to a sound file token and a server-transmitted session key according to an embodiment of the present invention.

FIG. **10** is a block diagram illustrating user authentication and a method for generating a new session key for a user according to another embodiment of the present invention.

FIG. **11** is a block diagram illustrating user authentication using a card verification value (CVV) code according to yet another embodiment of the invention.

FIG. **12** is a block diagram illustrating user account activation on a server according to an embodiment of the present invention.

FIG. **13** is a block diagram illustrating user authentication using a password as a session key according to yet another embodiment of the invention.

FIG. **14** is a process flow chart illustrating acts for creating a soft token for authentication for a user according to embodiments of the present invention.

FIG. **15** is a process flow chart illustrating acts for retrieving or activating a soft token for authentication according to embodiments of the present invention.

DETAILED DESCRIPTION

The inventors provide a system that may be used in a variety of ways using hardware and/or software to provide secure authentication over a network for users and user groups. The present invention is described according to various embodiments and in enabling detail supporting each of those embodiments. More particularly, the system uses a modulated sound consisting at least in part of an identification number and a session key.

It is important to note herein that in one embodiment, the identification number may, for example, contain 16 digits of data and may be a fixed identification number (ID) or on that is dynamically assigned. It may also be encoded to include an error detection bit. In this case the identification number may also be encrypted with a proprietary key to ensure the provider authorized to provide the software of the invention may practice the invention in a way that is functional.

The following example demonstrates a configuring and encryption of a 16-digit ID number for use according to an embodiment of the invention. The ID number may contain fewer or more than 16 digits. The number 16 is exemplary. ID number=12 34 56 78 90 01 23 45: The 16 digits are grouped into 8 decimal numbers value from 00-99 and these are 12, 34, 56, 78, 90, 01, 23, and 45. Each of the decimal numbers are converted into hexadecimal numbers value from $00-$63 and these are $0C, $22, $B8, $4E, $5A, $81, $17, $2D. The most significant bit of each byte of data is reserved for storing an error detection or parity bit. The string of hexadecimal values after conversion is $0C, $22, $B8, $4E, $5A, $81, $17, and $2D.

The ID number is then encrypted by adding an exclusive logical operator (XOR) that in this example is a proprietary 8-byte applet key. An example of the applet key is $99, $AA, $BB, $CC, $DD, $EE, $FF, $55. The resulting encrypted ID string is $95, $88, $03, $82, $87, $6F, $E8, $78. In this example, a session key is provided to generate a hash of the user password. The hashed password is valid only for one session.

In a variation of this embodiment, a new session key is generated each time a user attempts authentication and the user token is activated. An iterative algorithm [Ci+1=G (N, S, Ci)] is used to generate a new key. G=a one way function such as one based on a stream cipher, an encryption method that works on a continuous stream of data rather than individual data blocks. N=the client or user ID number described above whether encrypted or not. S=a proprietary seed known only to the issuer. Ci=the current session key. The session key may be 8 bytes or longer depending on the token capabilities. The inventor provides the above information for clarity relative to encryption methods only that are described in detail further below according to several embodiments. Other variants may be used without departing from the spirit and scope of the present invention. However, the function of a two factor authentication where one factor is an identification number and the other is a modulated sound is important in several aspects of the present invention as will be seen further below.

FIG. **1** is a block-diagram illustrating a secure transmission package **100** of a secure identification number and session key according to an embodiment of the invention. Package

100 represents an encoded and sound modulated transmission carrying a data payload 101 including a secure identification number 102 and a session key 103 comprising 2 data frames. Package 100 includes a protocol layer 104, an encoding layer 105, and a sound modulation layer 106. Package 100 is assembled at a client-operated personal computing appliance (PC) and is transmittable over a data-packet-network such as a local area network (LAN) or a wide area network (WAN) where it is decipherable at the other end, typically at a server adapted to authenticate secure access to some network-based resource.

Data payload 101 includes ID number 102, typically in an encrypted state. However, encryption of ID number 102 is not specifically required in order to practice the present invention. Session key 103 is used to encrypt a user password and is a unique key provided by a key issuer. A session key may be a dynamic key good only for one session as described further above. However, in some cases it may be a static key good for more than one session.

ID number 102 and Session key 103 are embedded into protocol layer 104 each chunk of data starts with a flag byte indicating the type of data enclosed and ends with a cyclical redundancy-checking (CRC) bit for transmission error detection comprising a data frame of a data type. The data frames carrying the ID number and session key are encoded with encoding breaks.

In this example, the frames are encoded using a Miller code known to the inventors. This encoding creates transitions every 1 elementary time unit (etu), every 1.5 etus, and every 2 etus even if the data doesn't change. Any other known code could be used in place of the Miller code, although other codes might create more transitions. The Manchester code for instance creates transitions every 0.5 etu and every 1 etu.

The encoding process in this example transmits the data (ID number and session key) and bit clock together in a same signal. The flag byte contains an encoding break, which is a longer time without data transition (3 etu for instance), signaling the beginning of a frame.

In this embodiment, the encoded bit flow is modulated as demonstrated by modulation layer 106 using a frequency-shift keying (FSK) modulation technique creating an analog waveform for representing logic 1 and another for representing logic 0 each wave form at different frequencies. The FSK modulation of the data is performed by a soft modem that is provided in an applet downloaded to a client practicing the present invention. The modem generates an audible sound compatible with PC sound card capabilities. The modulation frequency may be in the range of 0 Hz to 20 kHz for PC server application or in the range of 300 Hz to 3 kHz, which is compatible with telephone networks (wired and mobile). The modulated signal is demodulated by an FSK modem at the server.

FIG. 2 is an architectural overview 200 of interaction between a user and an authentication server according to an embodiment of the present invention. Overview 200 includes an authentication server adapted to authenticate a user 203 for access to a secure resource. Server 201 may be any type of server including a transaction portal authenticating transaction for a group of web merchants or banks. It may also be any server adapted to handle secure transactions for individuals. The server may simply provide secure login services to a secure area instead of enabling transactions. A secure authentication may be for the purpose of authentication one or more transactions or for granting network access to one or more than one secure resource. Likewise one server may perform both secure login services and secure transaction services.

In this example, user 203 is operating a PC having a network connection to server 201 over a network 202. Network 202 may be an Internet network, an Intranet network, or a wireless telephone network without departing from the spirit and scope of the present invention. In this example, to be authenticated user 203 has a password or personal identification number (PIN) and a token that generates a session key that is useable only once in this embodiment.

Before practicing the invention for the first time, user 203 receives an applet from server 201. The applet contains a modem and a session key issued by the server. The modem demodulates and decodes the signal and includes an encryption algorithm for handling the challenge/response interaction between the user and server. In this example, user 203 enters a password or pin code locally and inserts the sound token, which generates the modulated sound into an audio input on the PC. The session key automatically encrypts the password or PIN ensuring a permanent password encryption state meaning that the password or PIN is never transmitted over the network to the server in a clear or unencrypted state.

In this example user 203 is not required to enter a username. Server 201 sends the correct user name when it receives the correct ID number from the token on the client PC. Only a valid server can send the correct user name. Therefore user 203 is entering his password safely and securely.

FIG. 3 is an architectural overview 300 of interaction using the system of the invention according to another embodiment of the present invention. Overview 300 includes authentication server 201, network 202 and user 203 having the same description and element numbers introduced in the description of FIG. 2 above. In this example user authentication is demonstrated.

In this embodiment the applet on PC 203 generates a hash code based on the session key, challenge, and password. The challenge is a random number generated by server 201 for each transaction that requires authentication. Access is granted to the user operating PC 203 if the server authenticates the hash code, which is sent from the PC to the server over the network.

The hash code is the session key in this example. As the session key, the hash code is valid only once. The hash code is also the server challenge in this example. As the server challenge, the hash code is valid for a short period of time. In this embodiment server 201 deduces the current session key referred to herein for discussion purposes as (Ci) from the last session key used, which is stored at the server. The previous session key is referred to herein for discussion purposes as (Ci−1) or as (Co) in some embodiments is stored in the server database.

Server 201 generates a hash code of the user password stored at the server using the session key. In this example, server 201 compares the hash of the user password to the hash received. The user is authenticated for a transaction if both hash codes are identical. This indicates that both PC 203 and server 201 have used the same session key and password. In this case, server 201 stores (Ci−1) by (Ci) in the database and (Ci) cannot then be reused. In this interaction an ID number sent to server 201. The server sends a username challenge. The username challenge is sent in the form of a hash back to PC 203. The PC sends a hash code derived from the demodulated token parameters back to server 201. The server, in the meantime generates its own hash code and when the server receives the client response, a comparison of the hash codes is performed. If the hash codes are identical, the user is granted access or otherwise is validated as the correct user authorized to complete the transaction during the current session.

In a preferred embodiment, the sound signal or sound pass, as referred to by the inventor and illustrated herein as sound pass **205** in FIGS. **2** and **3**, may be provided in at least three system compatible forms. In fact any hardware device capable of playing a sound may be incorporated as a sound pass token. Therefore, the token may be a hardware device or a software file (soft form) like a Wav file for instance. One device that is disclosed herein and that may serve as a sound pass token is a smart card used in conjunction with a card reader. Another device that may be used as a sound pass token is a unique key device termed a key jack by the inventor. The key jack may be adapted to be inserted into any "audio in" line on a PC such as the microphone port, telephone jack, or any auxiliary port having connection directly or indirectly to the sound card on the PC. The key jack is manipulated to play the modulated sound pass by pressing a button provided on the device when the device is properly inserted into the PC. The applet on the PC makes use of the sound pass token, demodulating the signal and generating the hash code for send to the authentication server.

Yet another compatible sound token is soft version in the form of a sound file deliverable from a mobile device like a cell phone, a personal digital assistant, or a handheld music player such as a Sony music player or an Ipod™. As long as the sound file can be input into the PC and recognized by the applet running on the PC the present invention can be practiced successfully.

FIG. **4** is a block diagram illustrating basic electronics **400** of a key jack sound pass generator according to an embodiment of the present invention. In one embodiment a semiconductor chip installed enclosed in a hand-held device like a key jack discussed above that plugs into the microphone input or other line input on a PC generates the sound pass signal. In one embodiment, the key jack may be plugged into the sound input or headset connector jack associated with a mobile smart telephone or PDA enabling authentication through a telephone network.

In this example, chip circuitry **400** includes an electrically erasable programmable read-only memory (EEPROM) **401**. In one embodiment, a re-writable flash memory may be used. A modem circuit **406**, an on-chip oscillator **405**, a processing unit **409**, and a serial input interface **408**.

A tip/ring interface for plugging into a microphone jack or other line in is illustrated in reference to the chip circuitry and electrical paths. Chip **400** derives its voltage power from a sound card that provides from +3 to +5V direct current (DC). A testing interface **410** is provided on chip **400** for the purpose of enabling remote access to the chip for erasing and reprogramming and testing. All components on the chip are accessible or may at least be tested through interface **408** without removing the chip from its host. Processing unit **409** may be a small microprocessor. Testing interface **410** includes a connection to power and a connection to ground. A sound pass file may be stored on chip **400** in EEPROM **407** for use as a sound pass token. The file may be any suitable compression format including MP4, Wav, AVI, or others. Modem **406** and oscillator **405** generate the signal in the form of sine waves that are demodulated by a modem provided in the applet on the users PC.

The applet is, of course running when the sound pass token is input for authentication using a key jack. The resistor adapts the impedance between the chip **401** and the microphone or other input. Switch **404** activates the modem **406**, which in turn generates the modulated sound pass or signal input to the sound card on the PC. A user pushing a button, switch, or other mechanism on the external surface of the device hosting the chip operates or activates the modem to deliver the modulated sound one time. Test interface **410** is a bi-directional interface. As a mobile device key jack **400** may be used at virtually any PC station or if so adapted any mobile device capable of a bi-directional network connection. Therefore, a user may perform a secure login without physically using a clear text password or username that might later be revealed through a key logger program or the like.

FIG. **5** is a plan view of design options for a key jack signal generator according to embodiments of the present invention. In this example, the circuitry described above is housed within a convenient and mobile key jack device that can be worn around a user's neck or may be placed on a key ring for convenience. A key jack design **501** is illustrated in both a top view and in a side view. Device **501** includes a tip interface **508** adapted to fit into a microphone input on a PC or other computing appliance. The ring interface is illustrated herein as ring **509**. In one embodiment another plug interface may be used instead such as a telephone jack or other line in design capable of transmitting audio in to pass the signal into the computing appliance. Device **501** includes the sleeve illustrated in the device to the right as sleeve **510** functioning as ground.

In this case, device **501** is molded from a durable polymer and includes an activation switch in the form of a button **505**. A user may insert device **501** into a microphone input and depress button **505** to close switch **404** described further above thereby activating the modem to generate and modulate the sound pass signal. The sound pass signal contains the ID number and session key embedded in the modulated sound.

Key jack device **501** may be updated to change token parameters dynamically through the test interface. Optionally, other designs may be provided such as with a key jack device **503** illustrated in a position rotated 90 degrees from device **501**. Device **503** has a user activation button **504** located at the end of the device opposite tip/ring and sleeve assembly **510** in which the sleeve **510** is numbered. A convenient ring attachment **507** provides an interface for attaching the same to a rope or key ring. Device **503** has an alternate shape than device **501**. There are many variant design options available.

FIG. **6** is a block-diagram **600** illustrating basic electronics of a smart card signal generator **601** coupled to a card reader **602** according to another embodiment of the present invention. Diagram **600** includes a smart card **601** with the sound pass chip embedded therein. The card plugs into card reader **602**, which in turn is plugged into the microphone input of the host commuting appliance or other line input capable of carrying sound and directly or indirectly connected to the sound card on the computing appliance such as a PC.

The components of the chip are essentially identical to those describe in the example of FIG. **5** for the key jack circuitry. Therefore they shall retain the same element numbers and shall not be reintroduced. The difference in this implementation from that of the key jack implementation described above is that the chip **602** is removable from the card reader circuitry **602**. In both cases of the smart card/reader and the key jack, the reader has no processing components. The microprocessor **409** is part of the chip. Another variation that separates the two described embodiments is that in this example, modem **406** and the serial interface **408** share the same international standards organization (ISO) contacts.

In still another embodiment of the present invention, a key jack or a smart card coupled to a card reader is not required to successfully practice the present invention. The token may instead be embodied as a sound file containing the ID number and session key that is simply stored on a PC hard drive or, in one embodiment on a USB flash drive or other removable

media for better security. In the later case, the sound file token, which may be a way file or other audio compression format, is entirely mobile (if stored on a removable drive) and may be generated and stored on the removable drive by an applet downloaded to the host PC. It is important to note herein that a user may utilize the token at any station having the required network connection capabilities by plugging the removable drive containing the token into that station. An applet though would have to first be downloaded to that station for updating the session key in one embodiment.

In another embodiment however the applet may also be an executable stored on the same removable drive containing the token. For example, in a preferred embodiment the applet is a Java applet utilizing a java archive (JAR) including the token parameters and current session key. The applet and token parameters may be downloaded to a same removable media wherein session key updates are performed on the removable media instead of on the host appliance.

The only requirement of the host appliance is that it has a version Java installed and accessible to the network browser that recognizes the applet and JAR file on the removable media such as a re-writable (RW) compact disc (CD) or a flash drive. In this embodiment, extensions may be created to enable older versions of Java installed on older operating systems to recognize the Java applet and JAR file. In this way no initial download of an applet is required of the host PC.

The server may dynamically send a new session key upon connection established thereto by the host PC. The session key may be downloaded directly onto the removable media and the applet already on the removable media may automatically update the token for next use. In this way a user may perform a secure transaction from any host station running a compatible version of java or an older version of Java adapted by extension to recognize the latter version applet and JAR file. Moreover, the transaction may occur in a secure manner leaving no trace of the activity on the host PC.

In one embodiment using a sound file, the sound file may be updated by a PC-based applet, which includes a FSK modem generating the modulated signal based on a new session key received from the server. Alternatively, the sound file is updated by the server during a session with the host PC periodically lie every week or month. This is a static or quasi-static implementation of the system since the same session key is used for several authentications instead of being valid only for one authentication.

FIG. **7** is an architectural overview **700** of interaction using the system of the invention including authentication server **201** and a mobile device **701** for signal generation according to yet another embodiment of the present invention. As described above, in one embodiment a sound file may serve as the token that includes the user ID number and session key as previously described.

In this example, a modulated audio signal is generated by a sound-generating applet installed on and executable from mobile device **701**, which is a smart phone in this example. In another embodiment, phone **701** may instead be a PDA or a hand-held music player such as an Ipod™.

In one embodiment a user enters a password or PIN on the PC via the keyboard of the PC. The output speaker system of mobile device **701** may be leveraged to play the modulated sound pass into a microphone plugged into PC **203**. The microphone is plugged into the sound card on PC **203**. The server challenge is a hash of the user password and the PC response is the modulated sound pass sent to the PC from mobile device **701** acoustically.

In another embodiment, mobile device **701** may include a hardwire cable that connects the speaker or headset output to the microphone input accomplishing the same task of inputting the signal. A PC-based applet on the PC demodulates the sound pass signal and communicates with the server to authenticate the user. In this example, the token on the mobile device if a sound file may not be updated by a PC applet or by the server through the host PC. However, in one embodiment the sound file may be updated by the applet on the device if the server sends a new session key to the mobile device directly or by the server contacting the telephone directly and establishing a secure network session with the device to update the file.

FIG. **8** is a block diagram **800** illustrating user authentication and generation of a new session key by the token for use according to an embodiment of the present invention. The token in this example is a hardware token like a key jack or smart card. The authentication process of the present invention may vary slightly according to the form of token used. This embodiment is applicable to the use of either a smart card or a key jack token host described further above.

In this example a client has a token **801** in the form of a key jack or smart card having the secure chip described in the circuitry diagrams above. Token **801** in this example includes the user ID number (N), a secrete seed (S) provided by the authentication service, and a session key (Ci). Ci is the current session key stored on the token. In this case the token generates a new session key. A new session key that is generated by the token is expressed as Ci+1 which is =to a one-way function (G) of N, S, and Ci. Ci is the previous or current session key stored on the card, which may have been used in the last authenticated transaction made by the user. It is possible that Ci is a current key that has expired but was never used. The secrete seed (S) is a parameter issued to the client by the authentication entity or service and is known only to the issuing service. It is not specifically required in order to successfully practice the invention, but provides yet another enhancement to the hash code generation process.

At the server, an account belonging to the user is known. Server **802**, which may be the authenticating entity, has stored therein parameters of the user account including N, a user password (PW), S, and record of the last session key (Co) used in an authentication. Co may or may not be the same key as Ci on the token. In this example the user token generates a new session key (Ci+1) for each subsequent secure transaction that requires authentication of the user. The server deduces the new session key from knowledge of the last-used session key in the same fashion as the token.

The user **803** has a password (PW) that is identical to the password recorded in the account data and that is the only parameter the user manually enters in this embodiment. The server has an application **804** that issues a server challenge among other tasks whenever the ID number (N) is submitted. The user sends N to the server, which identifies the user and the server sends back a sever challenge (Cs) back to the user. The server challenge has described further above may be a hash of the user ID number and password. An applet **805** generates an encrypted version (Hi) of the Ci and PW using a symmetric-key encryption method known as the data encryption standard (DES) available to the inventor. Other methods are possible without departing from the spirit and scope of the present invention.

A Hash code is generated from Hi using the session key again (Ci), adding an xor function, and the server challenge (Cs), which may be hashed or not. The resulting hash code is divided in two and only one of the halves of the code is used as a client response (Lc) in this example that is sent to the server (Rc). The process of encryption and hashing ensues

after the server challenge is received at the client because the server challenge is a variable of the final hash code sent back to the server.

As the process unfolds, the server generates its own hash codes using the exact same parameters that the client used with the aid of the software driver (DLL) the codes cached temporarily in a code library **806**. Library **806** represents the processing environment that the server uses to temporarily store data and make hash comparisons to validate clients. In the server library **806**, the hash code generated by the server is compared to the one received by the client. If the compared codes are identical, L'c=Lc, then it provides absolute assurance that the client and the server used the same session key and the same password.

FIG. **9** is a block diagram **900** illustrating user authentication and update to a sound file token **901** and a server-transmitted session key according to an embodiment of the present invention. In the last embodiment, the token at the client location generates a new session key. In this example, the server generates a new session key.

The client has a sound file token **901** located on a PC or on some external device like a cell phone, PDA, or other handheld device capable of playing the sound file. The current sound file has the user ID number and the last session key sent to the server at the last successful transaction that required authentication. At server side, the client account parameters defining account **902** are known and include N, PW, S, and Co as described with respect to FIG. **8** above.

In this case, a user **903** manually enters a password (PW) known only to the user and to the server. A server application **904** provides a server challenge and a new session key transmission (Jc) to the applet running on the user PC. The server challenge is required by the applet running on the PC in this case to generate the proper hash code for return to the server as L'c and to obtain the new session key for use.

In this case, the server, within the library **906** generates a new session key after the correct identification number (N) is received from the client. The key is expressed in this case as Ci+1 and is derived from a one way function (G) of N, S, and Ci, or Ci+1=G(N,S,Ci). In library **906**, the transmission (Jc) is the new session key encrypted with the last session key (Ci) or Jc=DES (Ci, Ci+1).

The server sends Jc and the server challenge (Cs) together in one transmission back the client. The client generates a first hash (H'i), which is an encryption of the new session key sent by the server and the password or H'I=DES (C'I+1,PW). The server performs an identical hash in the library or Hi=DES (Ci+1,PW).

The applet on the client generates a final hash code (H'c) which is an encryption of Hi and the server challenge using the received session key and adding an xor function or H'c=DES(Ci+1,Hi,xor,Cs). The server performs the same hash Hc=DES(Ci+1,Hi,xor,Cs). H'c then equals the client code to be compared with the server code. The client sends L'c to the server and stores C'I+1 (new session key) as Co (the last session key used). The last operation occurs after the client is successfully validated. L'c is compared to Lc at the server and if the hash codes are identical, authentication is successful.

FIG. **10** is a block diagram **1000** illustrating user authentication and a method for generating a new session key for a user **1003** according to another embodiment of the present invention. In this example, the token is a sound file stored on a device like a cell phone or a PDA and a sound applet **1001** is provided to the mobile device to perform the modulation, demodulation and encryption. The client token includes N, S, and Ci. The sound applet **1001** generates a new session key expressed as Ci+1, which is =to G(H,S,Ci) where G is a one-way function. The known account parameters of the client account **1002** stored by the server are N (ID number), PW (Password), S (Secrete Seed), and Co (Last Session Key) used by the client.

In this example, user **1003** enters a PIN code (Pc) and plays the modulated sound into the microphone input of the PC acoustically using the speaker system of the mobile device. In one embodiment, the mobile device may be cabled to the microphone input from the speaker output or headset output. The client account **1002** at the server domain includes the parameters N, Pc, S, and Co.

In this implementation the user entered PIN code is duplicated Rc=Pc||Pc. A value Ei is generated and is an encryption of Ci and Rc or Ei=DES(Ci,Rc). Eventually, the PC applet **1005** creates an encryption code (Ec) that is the encryption of Ei and Cs using the session key (Ci) and adding an xor function. Expressed in this example, it is Ec=DES(Ci,Ei,xor, Cs). Ec is decrypted at the server using the session key stored in the account parameters.

FIG. **11** is a block diagram **1100** illustrating user authentication using a card verification value (CVV) code according to yet another embodiment of the invention. In this example, banks or other financial institutions deploy secure smart cards in the form of bank cards having the sound pass token chip embedded thereon. The cards are adapted as a variation of the smart card used with a card reader plugged into a microphone jack on the user PC as described further above.

In this example the token (bank card) includes the token parameters of N, S, and Ci where Ci is the current session key. N (ID number) is different than the issued card number in this example for better security, but it includes the ID of the card issuing entity and enables the bank to route the transaction along with the CVV number (3-digit number) using existing bank protocols. The client account **1102** includes the ID number (N), the secrete seed (S), the last session key used by the client (Co), and the client PIN code (Pc).

Like the smart card or key jack implementation described further above, the token generates the new session key expressed as Ci+1=G(N,S,Ci). The user may enter a PIN code (Pc) and then may perform a series of banking transactions by submitting transaction data B1-Bn. For each transaction, a new hash code (Hc) is generated by applet **1205** on the client PC. The final Hc is a dynamic card verification value (CVV) based on the session key, the transaction data (b1-Bn) for the instant transaction, and the Pc. In this example, Hc=Lc, which is sent to the server for each transaction and must be verified for each transaction.

The server generates its own hash to determine L'c, which is compared to the received Hc Lc for each transaction wherein the authentication is defined by the compared hash codes being identical. In this example, the server hash operation occurs after the user has entered his or her PIN code and the instant transaction data for that session. Otherwise, the server would not have any knowledge of Bi-Bn and could not match the client hash.

One with skill in the art of encryption will appreciate and understand the multi step encryptions using the session key at the client and the parallel encryption performed at the server so that the final hash codes may be compared. The actual process never reveals any clear text data that could become compromised. In fact, in all of the embodiments of the invention, the server may store the user ID number Username, Password, PIN, etc in permanently encrypted format.

FIG. **12** is a block diagram **1200** illustrating user account activation on a server according to an embodiment of the present invention. An activation protocol is used for clients that are activating their accounts for the first time. The acti-

vation protocol automatically activates the system software on the server. In this example, the user **1203** enters his username (U) and password (PW). Token **1201** includes the issued ID number (N), the secrete seed (S), a current session key (Ci) and the token generates the new session key (Ci+1, which is a one way function (G)(N,S,Ci). In initial use, account **1202** includes the username (U) in addition to N, PW, S, and Co. Note that Co is only available to the server after authenticating the client for the first time.

The user **1203** accesses his account **1202** with his username and password. The first time he is using a sound pass token, the ID number and new session key are transmitted to the server and stored in the database only after authentication. The session key is encrypted (Ic) with the password prior to transmission to the server.

FIG. **13** is a block diagram **1300** illustrating user authentication using a password as a session key according to yet another embodiment of the invention. In this case, the client **1302** knows the username (U) and the password (PW) to access account **1301**. Account **1301** has U and PW stored as parameters. In this case, user **1302** does not have a token available because he has forgotten it or otherwise does not have access to it.

In this case, user **1302** enters U and PW to access the account. The applet **1304** on the client PC creates a session key from the PW Hi=DES(PW,PW). The application **1303** at the server sends a server challenge (Cs) to the client. The applet **1304** on the client PC generates a hash code (Hc), which is a DES encryption of the PW, the previous encryption (Hi) and the server challenge (Cs) adding an xor function. The Hc is the client response (Lc) sent to the server. Although this implementation is less secure because the session key is fixed, the method still ensures a permanent encryption of the password. In a preferred embodiment, this implementation may provide only a limited access to the user account.

Creating and Retrieving a Soft Token

In one embodiment of the present invention the token is not a secure chip but a software file that works with a server driver (dll) and a client applet. The soft token can be made portable and can be duplicated to portable or removable drives. It is important to note herein that the token values are expressed as a modulated sound pass signal and that, in most secure embodiments a new session key is used for each token hash operation. In this way, the token contents never change, but the hash value of those contents sent to the server is never the same.

FIG. **14** is a process flow chart illustrating acts **1400** for creating a soft token for authentication for a user according to embodiments of the present invention. In general use, a soft token is created for the client and the token, which is a sound file or generated sound is used with a session key to produce the hash code that authenticates the user for each transaction that requires authentication.

In act **1401**, the server calls a driver or dll at the server or in some connected machine and receives randomly written token contents that provide the basis for future client access of one or of more than on account held for the client by one or more services. It is possible that the token issuer and the authentication entity is a third party to the transaction between a client and a service organization maintaining an account for the client.

In act **1402**, the authentication server passes the token contents as clear text string along with a software applet to the client. The applet automatically installs itself either in the clients Web browser as a plug-in or as a separate instance. The applet and the token together may be packaged as a Java-based solution, more particularly an executable Java Archive (JAR) file. The solution includes the domain of the parent application or server-side dll. At act **1403**, the server replicates or writes the token contents into a database at the server. Token contents may include, but are not limited to a user ID number, a secrete seed, and an initial session key. Account parameters may include a password or PIN in addition to the other components mentioned above.

When the applet is received at the client, it executes on the client for the purpose of creating the token file at act **1404**. In one embodiment there is a virtual keypad included as part of the applet program that may be used by the client to enter an encryption code for the purpose of encrypting the token file. In act **1405**, it is determined if the virtual keypad is enabled or not. It may be a matter of user preference. If the virtual keypad is enabled at act **1405**, then at act **1406**, the user is prompted to enter a code to use as an encryption key. In one embodiment, the user-entered code is message-digest algorithm 5 (MD5) hashed and the hash value of the code is used as the encryption key. In a variation of this embodiment, random salts are added on each end of the token string before encryption. Salts are known in the art and used in DES sometimes to strengthen encryption. MD5 is a well-known hash used for many security applications and for file integrity checking. Other known or future-developed hash algorithms may be used in other embodiments without departing from the spirit and scope of the present invention.

At act **1405**, if it is determined that a virtual keypad is not available, then a default code is used and the process skips to act **1407** where the token is encrypted using the MD5 hash value described above or some other value derived from a hash operation.

At act **1407**, the token contents are encrypted according to either case of user-entered code or default code, and written to a token JAR file in a preferred embodiment. In the preferred implementation the applet is a Java applet leveraging a token file, which is a JAR file. At act **1408**, it is determined if the token deployment mode will be dynamic or not. This option may be pre-set as a default by the token issuer or it may be an election granted to the user. Dynamic deployment mode is an option that prevents any storage of the token at the client machine. In the case of dynamic deployment, the user will immediately use the issue token to perform a secure transaction after which the token is no longer valid. In act **1408** if deployment mode is dynamic then the process ends at act **1409**.

If is act **1408** the token deployment mode is not dynamic, then at act **1410** the applet write the token file in encrypted form to the root drive on the client PC. At act **1411** it is determined if the token will be a portable token or not. This option may be a user preference. If at act **1411** the token is not portable, then the process ends at act **1409**. If at act **1411** it is determined that the token is a portable token, then at act **1412**, the user enters the parameters for the device or devices that will receive the token or a replicate of the token. These parameters may include a device machine address if the device is on a network, or drive letter id the device is directly attached storage (DAS). After the user enters the correct information, the applet writes or replicates the token to the appropriate storage devices at act **1413**. The process ends at act **1409**.

One with skill in the art of encryption will appreciate that the exact encryption system and methods employed may vary somewhat without departing from the spirit and scope of the present invention. For example, MD4 may replace MD5 as the hash method for the personal or default encryption code. Salts may be used or may not be used. It is reminded here for clarity that the ID number and session key are embedded into the generated sound or sound file or sound pass that is the

token, each time the token is activated, a new session key is generated in a preferred embodiment.

FIG. **15** is a process flow chart illustrating acts **1500** for retrieving or activating a soft token for authentication according to embodiments of the present invention. At act **1501**, it is determined whether the token deployment is dynamic mode or not. Dynamic mode means that there is no token resident on the client PC. If at act **1501** dynamic mode is enabled, then at act **1502** the server sends a session key, timestamp and applet to the client. If at act **1501**, dynamic mode is not enabled, then the process skips to act **1503** wherein the applet executes of the client PC. In either case, the applet executes on the client PC in act **1503** and saves the session key in act **1504**.

At act **1505** it is determined whether the virtual keypad is enabled or not. If at act **1505**, the virtual keypad is enabled, then at act **1506** the user is asked to enter a code to use in encryption of the session key saved in act **1504**. At act **1508** then the user enters the code. If the virtual keypad is not enabled at act **1505**, then a default code is used at act **1507**. The code is used to decrypt the token contents. In dynamic mode the applet has the token. If the mode is not dynamic then at act **1509**, the applet looks for the client token. The applet will use the first token it finds if there are multiple portable tokens or if the token is otherwise resident in more than one location accessible to the applet at the time.

At act **1510**, the applet retrieves the domain of the token issuer to ensure it is the correct token. At act **1511**, the PC applet creates an MD5 hash of the user-entered code of act **1508**, or of the default code of act **1507**. If operating in dynamic mode, the applet also updates the exiting token contents with the passed contents. At act **1512**, the PC applet uses the hash to decrypt the token contents including removing any salts from the token contents. At act **1513**, the PC applet concatenates the token value domain name and timestamp received from the server if dynamic mode is enabled. At act **1514**, the applet performs an MD5 hash on the string of act **1513**. At act **1515** the PC applet sends the hashed contents or content string to the authentication server.

At act **1516**, the server calls the software driver (dll) to validate the contents of the string received from the client against the token and its domain retrieved from the server database. At act **1517** the dll attempt to authenticate the user by comparing the Parsed contents, which have been MD5 hashed by the client applet to a server hash of the token value, domain, and timestamp from the server. In act **1517**, the server also checks to current time stamp against the current time. If it is operating according to dynamic mode. If the time stamp is not more than 2 minutes or so before the current time at the server, and the hashed values match then the user is authenticated in act **1517** and is granted access into the secure area at act **1518**. The content string should equal the MD5 hash value of the server database token, the server domain and the original timestamp. Act **1518** may be access to a resource or it may be an approval or other type of user validation for a transaction.

If the hashed values matched but the time stamp window has expired in act **1517** then authentication fails and at act **1519** the server denies access or approval and returns an error to the user. Likewise, if the hashed values do not match identically then the user is not authenticated and the process moves again to act **1519**.

It will be apparent to a skilled person that the examples and embodiments described in enabling detail above are not completely limiting to the invention. They are examples of practice of the invention. There may be many alterations that may be made in the described embodiments without departing from the spirit and scope of the invention. For example, readers and tokens may be implemented in many ways, in many shapes, and with a variety of materials, still within the scope of this invention. Further communications protocols may vary, and there are many ways of providing functionality critical to the invention with software beyond the examples give. It is not, for example, strictly limiting that the token generated is a sound file. Tokens may be provided in other ways as well. In one case one might provide a modulated light signal, or infrared signal to be read by an optical reader, the signal modulated to provide the same sort of information provided by the audio token described in detail above. The token might be a modulated vibratory signal. It could also be a character string coded in a fashion to provide the necessary input. Therefore the invention is limited only by the scope of the following claims.

What is claimed is:

1. An access security process, comprising:

opening a connection to an interactive web site executing on a processor of an Internet-connected server by a client computerized appliance asserting a URL in a web browser;

displaying a log-in mechanism to the client computerized appliance by the interactive web site, enabling a user operating the client computerized appliance to enter log-in information;

in response to a successful log-in, sending to the client computerized device, data including a time stamp of the time of the log-in, and a page location of an applet to be run by the client computerized appliance to continue the security process;

through executing the applet on the client computerized device, determining the domain of the server by querying the page that includes the applet, and searching data storage devices coupled to the client computerized device for an encrypted token compatible with the security process;

on finding the token, rendering a virtual keypad on a display of the client computerized appliance, enabling the user to enter a PIN known to the user for decrypting the encrypted token;

if the PIN does not successfully decrypt the token, suspending the security process;

in the event the PIN successfully decrypts the token, salting the decrypted token value with the time stamp and the domain by adding the domain on one end of the token string and the time stamp on the other end, and hashing the result by a specific hash function;

sending the hash value of the decrypted, salted token value to the interactive web page at the server;

invoking a dll at the server, retrieving a token stored at the server, salting that token with the domain of the server and the original time stamp sent to the client computerized appliance, and hashing the result by the specific hash function;

comparing the hash value received from the client computerized appliance with the hash value generated by the dll at the server, and determining passage of time from the time of the original time stamp to present time;

if the passage of time is greater than a preprogrammed time, or if the hash values do not match, denying access by the user at the server; and

if the passage of time is within the time window and the hash values do match, granting access to the user at the server.

2. The process of claim **1** wherein the data storage device coupled to the client's computer where the compatible token is found is a flash thumb drive.

3. The process of claim 1, wherein the token is unique to a client and includes an identification number, a password or personal identification code, a session key, and a secrete data seed.

4. The process of claim 1, wherein the token is an archive.

5. An access security system, comprising:

an Internet-connected server coupled to a data repository and having a processor; and

software executing on the processor from a non-transitory medium, the software providing a process:

opening a connection to an interactive web site executing on the processor of the Internet-connected server by a client computerized appliance asserting a URL in a web browser;

displaying a log-in mechanism to the client computerized appliance by the interactive web site, enabling a user operating the client computerized appliance to enter log-in information;

in response to a successful log-in, sending to the client computerized device, data including a time stamp of the time of the log-in, and a page location of an applet to be run by the client computerized appliance to continue the security process;

through executing the applet on the client computerized device, determining the domain of the server by querying the page that includes the applet, and searching data storage devices coupled to the client computerized device for an encrypted token compatible with the security process;

on finding the token, rendering a virtual keypad on a display of the client computerized appliance, enabling the user to enter a PIN known to the user for decrypting the encrypted token;

if the PIN does not successfully decrypt the token, suspending the security process;

in the event the PIN successfully decrypts the token, salting the decrypted token value with the time stamp and the domain by adding the domain on one end of the token string and the time stamp on the other end, and hashing the result by a specific hash function;

sending the hash value of the decrypted, salted token value to the interactive web page at the server;

invoking a dll at the server, retrieving a token stored at the server, salting that token with the domain of the server and the original time stamp sent to the client computerized appliance, and hashing the result by the specific hash function;

comparing the hash value received from the client computerized appliance with the hash value generated by the dll at the server, and determining passage of time from the time of the original time stamp to present time;

if the passage of time is greater than a preprogrammed time, or if the hash values do not match, denying access by the user at the server; and

if the passage of time is within the time window and the hash values do match, granting access to the user at the server.

6. The system of claim 5, wherein the data storage device coupled to the client's computer where the compatible token is found is a flash thumb drive.

7. The system of claim 5, wherein the token is unique to a client and includes an identification number, a password or personal identification code, a session key, and a secrete data seed.

8. The system of claim 5, wherein the token is an archive.

* * * * *