US011050856B1

(12) **United States Patent**
Morris

(10) **Patent No.: US 11,050,856 B1**
(45) **Date of Patent: *Jun. 29, 2021**

(54) **METHODS, SYSTEMS, AND COMPUTER PROGRAM PRODUCTS FOR SHARING INFORMATION FOR DETECTING AT LEAST ONE TIME PERIOD FOR A CONNECTION**

(71) Applicant: **JENAM TECH, LLC**, Longview, TX (US)

(72) Inventor: **Robert Paul Morris**, Madison, GA (US)

(73) Assignee: **JENAM TECH, LLC**, Longview, TX (US)

(*) Notice: Subject to any disclaimer, the term of this patent is extended or adjusted under 35 U.S.C. 154(b) by 0 days.

This patent is subject to a terminal disclaimer.

(21) Appl. No.: **17/184,554**

(22) Filed: **Feb. 24, 2021**

Related U.S. Application Data

(63) Continuation of application No. 17/148,824, filed on Jan. 14, 2021, now Pat. No. 10,986,217, which is a (Continued)

(51) **Int. Cl.**
H04L 29/06 (2006.01)

(52) **U.S. Cl.**
CPC ***H04L 69/16*** (2013.01)

(58) **Field of Classification Search**
CPC H04L 29/06; H04L 69/18; H04L 69/16; G06F 9/50; G06F 9/5027
See application file for complete search history.

(56) **References Cited**

U.S. PATENT DOCUMENTS

5,371,852 A 12/1994 Attanasio et al.
5,495,480 A 2/1996 Yoshida
(Continued)

FOREIGN PATENT DOCUMENTS

EP 1242882 A2 9/2002
WO 2007069046 6/2007

OTHER PUBLICATIONS

Office Action Summary in U.S. Appl. No. 17/148,824.
(Continued)

Primary Examiner — Syed Ali
(74) *Attorney, Agent, or Firm* — Patrick E. Caldwell, Esq.; The Caldwell Firm, LLC

(57) **ABSTRACT**

In various embodiments, a method, apparatus, and computer program product are provided to: receive first information on which at least a first duration for detecting a first type of time period is based; generate a first packet including a first parameter field identifying first metadata for use in determining a second duration for detecting the first type of time period; set up a first connection, by sending, from the first node to a second node, the first packet to provide the first metadata to the second node, for use by the second node in determining the second duration for detecting the first type of time period; in response to detecting, based on the first duration and by the first node during at least a portion of the first connection including at least a portion of the first connection set up, a first time period of the first type of time period, at least partially close the first connection; and in response to detecting, based on the second duration and by the first node after the first duration is changed to the second duration, a second time period of the first type of time period, at least partially close the first connection.

56 Claims, 8 Drawing Sheets

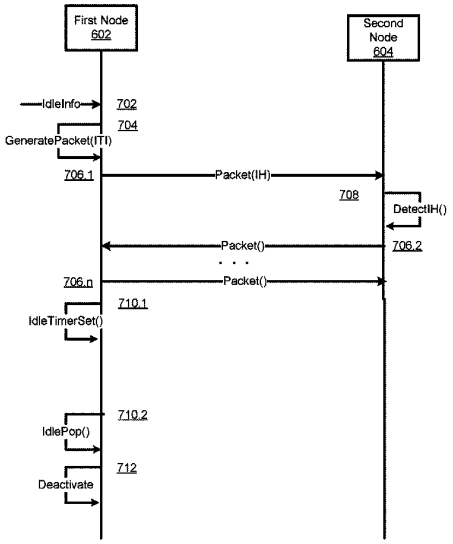

GOOGLE EXHIBIT 1001

Related U.S. Application Data

continuation of application No. 16/914,267, filed on Jun. 26, 2020, which is a continuation of application No. 16/368,811, filed on Mar. 28, 2019, now Pat. No. 10,742,774, which is a continuation of application No. 16/040,522, filed on Jul. 19, 2018, now Pat. No. 10,375,215, which is a continuation of application No. 15/915,047, filed on Mar. 7, 2018, now Pat. No. 10,075,564, which is a continuation of application No. 15/694,802, filed on Sep. 3, 2017, now Pat. No. 9,923,995, which is a continuation-in-part of application No. 14/667,642, filed on Mar. 24, 2015, now abandoned, which is a continuation-in-part of application No. 13/477,402, filed on May 22, 2012, now abandoned, which is a continuation of application No. 12/714,454, filed on Feb. 27, 2010, now Pat. No. 8,219,606.

(56) **References Cited**

U.S. PATENT DOCUMENTS

6,212,175 B1 4/2001 Harsch
6,273,622 B1 8/2001 Ben-David
6,389,462 B1 * 5/2002 Cohen H04L 29/06 707/999.01
6,412,006 B2 6/2002 Naudus
6,412,009 B1 6/2002 Erickson et al.
6,584,546 B2 6/2003 Kavipurapu
6,601,101 B1 * 7/2003 Lee H04L 67/1008 709/202
6,665,727 B2 12/2003 Hayden
6,674,713 B1 1/2004 Berg et al.
6,704,786 B1 3/2004 Gupta et al.
6,757,248 B1 6/2004 Li et al.
6,826,613 B1 * 11/2004 Wang G06F 3/0607 709/202
6,880,013 B2 4/2005 Kashyap
6,981,048 B1 12/2005 Abdolbaghian et al.
7,002,917 B1 2/2006 Saleh
7,035,214 B1 4/2006 Seddigh et al.
7,050,940 B2 5/2006 Basso et al.
7,152,111 B2 12/2006 Allred et al.
7,389,512 B2 6/2008 Tucker
7,404,210 B2 7/2008 Lin
7,426,569 B2 9/2008 Dunk
7,428,595 B2 9/2008 Deshpande
7,464,326 B2 12/2008 Kawai et al.
7,535,913 B2 5/2009 Minami et al.
7,606,191 B1 10/2009 Breau et al.
7,636,805 B2 12/2009 Rosenberg
7,684,346 B2 3/2010 Valli
7,720,989 B2 5/2010 Dunk
7,729,271 B2 6/2010 Tsuchiya et al.
7,808,941 B2 10/2010 Ramos et al.
7,848,351 B2 12/2010 Kim et al.
7,876,678 B2 1/2011 Ong
7,962,623 B2 6/2011 Undery et al.
8,031,617 B2 10/2011 Mogul et al.
8,073,964 B2 12/2011 Dunk
8,077,737 B2 12/2011 Ji
8,219,606 B2 7/2012 Morris
8,228,830 B2 7/2012 Babin et al.
8,259,716 B2 9/2012 Diab
8,375,134 B2 2/2013 Herzog et al.
8,483,095 B2 7/2013 Hegde et al.
8,700,695 B2 4/2014 Sundarrajan et al.
8,711,851 B1 4/2014 Subramonian et al.
9,060,310 B2 6/2015 Ji
9,923,995 B1 3/2018 Morris
9,923,996 B1 3/2018 Morris
2003/0131135 A1 7/2003 Yun
2004/0006643 A1 * 1/2004 Dolson H04L 67/2804 709/246
2004/0062267 A1 * 4/2004 Minami H04L 47/10 370/463
2004/0093376 A1 5/2004 Boor et al.
2004/0098748 A1 5/2004 Bo et al.
2005/0054347 A1 3/2005 Kakani
2005/0063304 A1 3/2005 Sillasto et al.
2005/0135248 A1 6/2005 Ahuja et al.
2005/0204013 A1 9/2005 Raghunath et al.
2006/0034179 A1 2/2006 Carter et al.
2006/0195547 A1 8/2006 Sundarrajan et al.
2007/0005804 A1 1/2007 Rideout
2007/0008884 A1 1/2007 Tang
2007/0064677 A1 3/2007 Xiong
2007/0086461 A1 4/2007 Ward et al.
2007/0110046 A1 5/2007 Farrell et al.
2007/0140193 A1 6/2007 Dosa et al.
2007/0171921 A1 7/2007 Wookey et al.
2007/0266170 A1 * 11/2007 Mockett H04N 21/6408 709/231
2008/0037476 A1 * 2/2008 Del Prado Pavon H04W 16/14 370/337
2008/0084826 A1 4/2008 Ong
2008/0095124 A1 4/2008 Ramos et al.
2008/0144603 A1 6/2008 Chouksey et al.
2008/0261596 A1 10/2008 Khetawat et al.
2009/0201857 A1 8/2009 Daudin et al.
2009/0252072 A1 10/2009 Lind et al.
2010/0057844 A1 3/2010 Johnson
2010/0074273 A1 3/2010 Ji
2010/0165896 A1 * 7/2010 Gong H04W 52/0216 370/311
2010/0284273 A1 * 11/2010 Haartsen H04L 47/2475 370/230
2011/0116471 A1 * 5/2011 Pittmann H04W 36/005 370/331
2011/0116480 A1 * 5/2011 Li H04W 28/04 370/332
2011/0131654 A1 * 6/2011 Taneja H04L 63/1441 726/23
2011/0213820 A1 9/2011 Morris

OTHER PUBLICATIONS

Palm Treo 650 Manual, published in 2004, available at https://www.wireless.att.com/download/phone_manual/treo_650.pdf.
Postel, J. "The TCP Maximum Segment Size and Related Topics," Network Working Group, RFC 879, available at https://tools.ietf.org/html/rfc879.
Postel, John(ed.), Editor; "Transmission Control Protocol—DARPA Internet Protocol Specification", RFC 793, USC/Information Sciences Institute, http://tools.ietf.org/rfc/rfc793.txt, Sep. 1981.
Protocol Enhancements for Intermittently Connected Hosts, Schütz et al., ACM SIGCOMM Computer Communication Review, vol. 35, No. 2, Jul. 2005, published in Jul. 2005.
Real-Time Transport Protocol (RTP) Payload Format and File Storage Format for the Adaptive Multi-Rate (AMR) and Adaptive Multi-Rate Wideband (AMR-WB) Audio Codecs (aka Framing Parameters for GAN) ("RFC 3267"), published in Jun. 2002, available at https://tools.ietf.org/html/rfc3267.
Requirements for Internet Hosts—Communication Layers RFC 1122 ("RFC 1122"), published in Oct. 1989, available at https://tools.ietf.org/html/rfc1122.
Roskind, Jim "Multiplexed Stream Transport Over UDP," QUIC, Dec. 2, 2013, 51 pages.
S. Bradner "IETF Working Group Guidelines and Procedures," Network Working Group, RFC 2418, Sep. 1998.
S. Bradner, "The Internet Standards Process—Revision 3" Network Working Group, RFC 2026.
Stream Control Transmission Protocol (SCTP)—("SCTP") RFC 2960, R. Stewart et al., published in Oct. 2000, available at https://tools.ietf.org/html/rfc2960.
Sun Blade 1000 and Sun Blade 2000 Getting Started Guide, Part No. 816-3216-10, published in Jan. 2002, available at https://docs.oracle.com/cd/E19127-01/blade1000.ws/816-3216-10/816-3216-10.pdf.

(56) **References Cited**

OTHER PUBLICATIONS

T Bova et al. "Reliable UDP Protocol" (Internet-Draft for the Internet Engineering Task Force, dated Feb. 25, 1999.
TCP Abort Timeout Option (draft-eggert-tcpm-tcp-abort-timeout-option-00), published Apr. 14, 2004, available at https://tools.ietf.org/html/draft-eggert-tcpm-tcp-abort-timeout-option-00.
TCP User Timeout Option RFC 5482, published in Mar. 2009, available at https://tools.ietf.org/html/rfc5482.
TCP/IP Illustrated, vol. 1: The Protocols, W. Richard Stevens, published in 1994.
The Federal Networking Council, The Networking and Information Technology Research and Development Program, Oct. 10, 1997, available at https://www.nitrd.gov/historical/fnc-material.aspx.
Transmission Control Protocol RFC 793, published in Sep. 1981, available at https://tools.ietf.org/html/rfc793.
"A Border Gateway Protocol 4 (BGP-4)" RFC 1771, published in Mar. 1995, available at https://tools.ietf.org/html/rfc1771.
"Discussion Lists," IETF, available at https://www.ietf.org/how/lists/discussion/.
"IETF Announce Mailing List," IETF, Apr. 2004.
"IETF Document Management System Datatracker 2 for Eggert," IETF, Datatracker.
"IETF TCP Maintenance," IETF, Apr. 2004.
"TCP Option Kind Numbers," Network Working Group, RFC 2780.
"Using SCTP as a Transport Layer Protocol for HTTP," draft-natarajan-httpbis-sctp-00.txt, published Oct. 27, 2008, available at https://tools.ietf.org/id/draft-natarajan-httpbis-sctp-00.html.
Allman, M., Paxson, V., Stevens, W., "TCP Congestion Control", RFC 2581, Internet Engineering Task Force, http://tools.ietf.org/rfc/rfc2581.txt,-Apr. 1999.
Apogee Communications, Rapport de Veille Technologique Securite No. 69, (Security Technology Watch Report) (Apr. 2004).
BT Mobile BlackBerry Enterprise Server 4.0, Information Sheet, published in 2005, available at https://www.bt.com/static/i/media/pdf/blackberry_ITadvice_june05.pdf.
Busatto, Fabio, "TCP Keepalive Overview", TCP Keepalive HOWTO, Section 2, http://tldp.org/HOWTO/html_single/TCP-Keepalive-HOWTO/#overview, accessed Jan. 2010, May 2007.
Cisco 7200 Series Network Processing Engine NPE-G1 Data Sheet, published in Jun. 2006, available at https://www.cisco.com/c/en/us/products/collateral/interfaces-modules/network-processor-modules/product_data_sheet09186a00800c6bd6.pdf.
Cisco 7200 Series Router Architecture, published in Feb. 2008, available at https://www.cisco.com/c/en/us/support/docs/routers/7200-series-routers/5810-arch-7200-5810.pdf.
Cisco 7200 VXR Series Routers Data Sheet, published in 2008.
Cisco 7200 VXR Series Routers Quick Look Guide published in Nov. 2007.
Cisco IOS BGP Configuration Guide, Release 12.4T, Chapter: Cisco BGP Overview, published in 2007, available at https://www.cisco.com/c/en/us/td/docs/ios/12_2sr/12_2srb/feature/guide/tbgp_c/tbrbover.html.
Cisco IOS BGP Configuration Guide, Release 12.4T, Chapter: Configuring BGP Neighbor Session Options ("Cisco IOS BGP Options"), published in 2007, available at https://www.cisco.com/c/en/us/td/docs/ios/12_2sr/12_2srb/feature/guide/tbgp_c/brbpeer.html.
Christian Zamfir, Live Migration of User Environments Across WideArea Networks, Master's Thesis, Department of Computing Science, University of Glasgow (Oct. 2008).
Digital cellular telecommunications system (Phase 2+); Generic access to the A/Gb interface; Stage 2 (3GPP TS 43.318 version 6.7.0 Release 6) ("TS 43.318"), published in Jun. 2006.
Eggert, L., Gont, F., "TCP User Timeout Option", RFC 5482, Internet Engineering Task Force (IEFT), http://tools.ietf.org/html/rfc5482.txt, Mar. 2009.
F. Gont, "TCP Adaptive User TimeOut (AUTO) Option," Network Working Group, May 19, 2004.
HP Compaq Business Desktop d530 Series, QuickSpecs ("d530 QuickSpecs"), published on Jul. 14, 2003, available at http://www.hp.com/ecomcat/hpcatalog/specs/emeapsg/99/D530SERIES.pdf.
HP iPAQ H4000 Series User Guide, published in Aug. 2003.
Hypertext Transfer Protocol—HTTP/1.1 RFC 2068, published in Jan. 1997, available at https://tools.ieft.org/html/rfc2068.
Hypertext Transfer Protocol RFC 2616, published in Jun. 1999, available at https://tools.ietf.org/html/rfc2616.
IESG Statement: Normative and Informative References, Apr. 19, 2006, available at https://www.ietf.org/blog/iesg-statement-normative-and-informative-references/.
IETF Document Management System Datatracker 1 for Eggert, available at https://datatracker.ietf.org/doc/draft-eggert-tcpm-tcp-abort-timeout-option/.
IETF face-to-face meeting (San Diego, Aug. 2, 2004).
Internet Domain Survey, Jan. 2010, Internet Systems Consortium available at https://downloads.isc.org/www/survey/reports/2010/01/.
J. Moy, "The OSPF Specification," Network Working Group, RFC 1131, Oct. 1989.
Jacobson et al, "TCP Extensions for High Performance," Network Working Group, RFC 1323, May 1002, available at https://tools.ietf.org/html/rfc1323.
Jacobson et al, "TCP Extensions for Long-Delay Paths," Network Working Group, RFC 1072, Oct. 1988, available at https://tools.ietf.org/html/rfc1072.
Jim Roskind, QUIC Quick UDP Internet Connections, Multiplexed Stream Transport Over UDP, Nov. 7, 2013 (first draft earlier), available at https://www.ietf.org/proceedings/88/slides/slides-88-tsvarea-10.pdf.
Jon Postel, "Transmission Control Protocol," DARPA Internet Program Protocol Specification, RFC 793, dated Sep. 1981.
Koziero, Charles M., TCP Connection Management and Problem Handling, the Connection Reset Function, and TCP "Keepalives", The TCP/IP Guide, p. 3, http://www.tcpipguide.com/free/t_TCPConnectionManagementandProblemHandlingtheConnec-3.htm, accessed Feb. 2010, (c) 2003-2010.
Mathis et al, "TCP Selective Acknowledgment Options," Network Working Group, RFC 2018, Oct. 1996, available at https://tools.ietf.org/html/rfc2018.
Mathis, M., Mandave, J., Floyd, S., Romanow, A., "TCP Selective Acknowledgement Options", RFC 2018, Internet Engineering Task Force, http://tools.ietf.org/rfc/rfc2018.txt, Oct. 1996.
Mobile IP Traversal of Network Address Translation (NAT) Devices RFC 3519 ("RFC 3519"), published in Apr. 2003, available at https://tools.ietf.org/html/rfc3519.
Nagle, John, "Congestion Control in IP/TCP Internetworks", RFC 896, Ford Aerospace and Communications Corporation, http://tools.ietf.org/rfc/rfc896.txt, Jan. 1984.
NetEx "'C' Configuration Manager and NetEx® Alternate Path Retry (APR) Release 4.0" software reference manual, published in 2002, available at http://www.netexsw.com/nesi/support/ReleasedDocs/ConfMgr/man-cnet-conf-mgr-02.pdf.
NetEx/IP™ for UNIX Systems Release 6.0 Software Reference Manual, published in 2004, available at http://www.netexsw.com/nesi/support/ReleasedDocs/Hxx0IP/man-hunxip-03.pdf.
Network Support for Intermittently Connected Mobile Nodes, Simon Schutz, published on Jun. 13, 2004, available at https://eggert.org/students/schuetz-thesis.pdf.
Network Working Group, "QUIC: A UDP-Based Secure and Reliable Transport for HTTP/2 draft-tsvwg-quic-protocol-00", Jun. 17, 2015.
Office Action Summary in U.S. Appl. No. 12/714,063 dated Jun. 21, 2012.
Office Action Summary in U.S. Appl. No. 12/714,063 dated Mar. 4, 2013.
Office Action Summary in U.S. Appl. No 12/714,063 dated Sep. 27, 2013.
Office Action Summary in U.S. Appl. No. 12/714,454 dated Feb. 23, 2012.
Office Action Summary in U.S. Appl. No. 13/477,402 dated Sep. 24, 2014.

(56) **References Cited**

OTHER PUBLICATIONS

Office Action Summary in U.S. Appl. No. 15/694,802 dated Nov. 29, 2017.
Office Action Summary in U.S. Appl. No. 17/079,397.
Berners-Lee et al., IETF RFC 1866 "Hypertext Markup Language —2.0", Nov. 1995, available at https://toolsielf.org/html/rfc1866.
Heavens, Ian, IETF, "Problems with TCP Connections Terminated by RSTs or Timers," Internet Draft, Jul. 1995, available at https://tools.ietf.org/html/draft-heavens-problems-rsts-00.html.
RFC 1001, "Protocol Standard for a NetBIOS Service on a TCP/UDP Transport: Concepts and Methods", Mar. 1987, available at https://tools.ietf.org/html/rfc1001.
Vasseur et al., IETF RFC 5440 "Path Computation Element (PCE) Communication Protocol (PCEP)," Mar. 2009, available at https://tools.ieff.org/html/rfc5440.

* cited by examiner

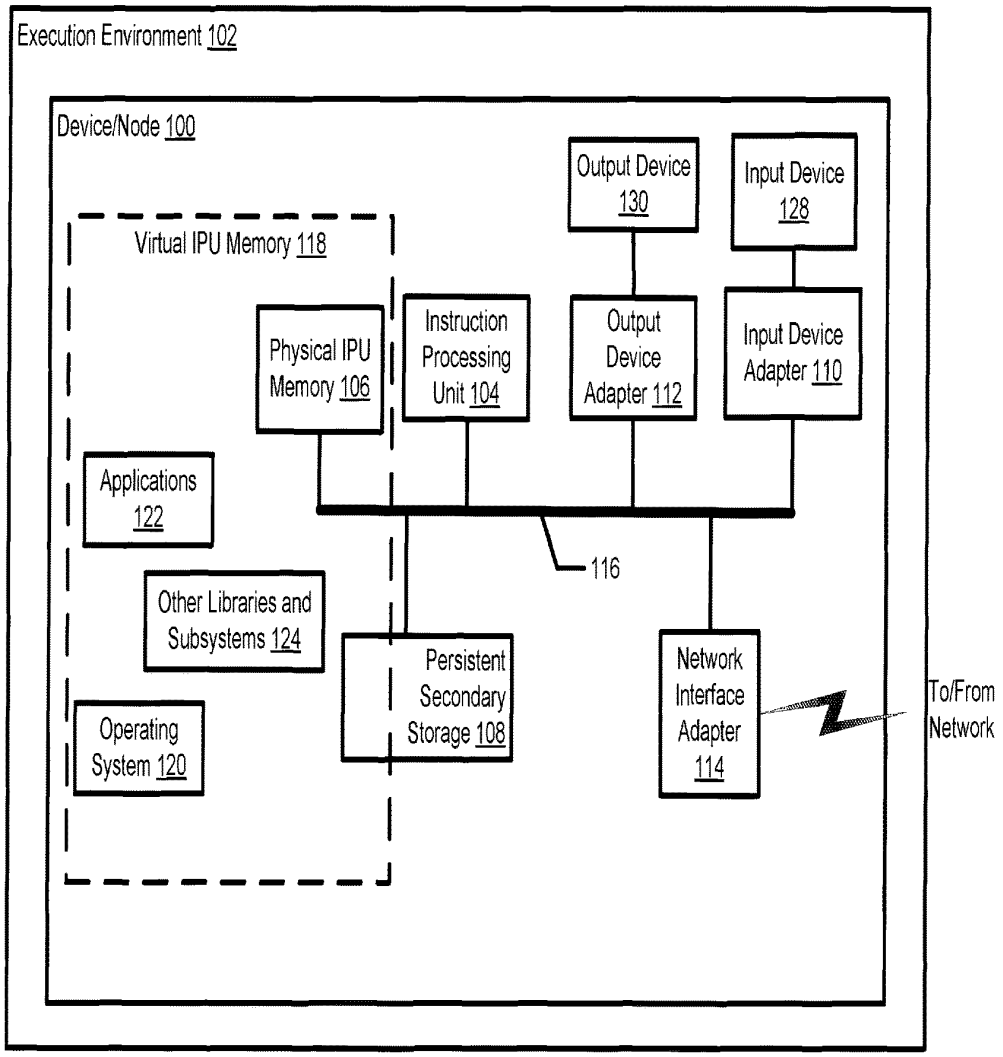
Execution Environment 102
Device/Node 100
Output Device 130
Input Device 128
Virtual IPU Memory 118
Physical IPU Memory 106
Instruction Processing Unit 104
Output Device Adapter 112
Input Device Adapter 110
Applications 122
116
Other Libraries and Subsystems 124
Persistent Secondary Storage 108
Network Interface Adapter 114
To/From Network
Operating System 120

Fig. 1

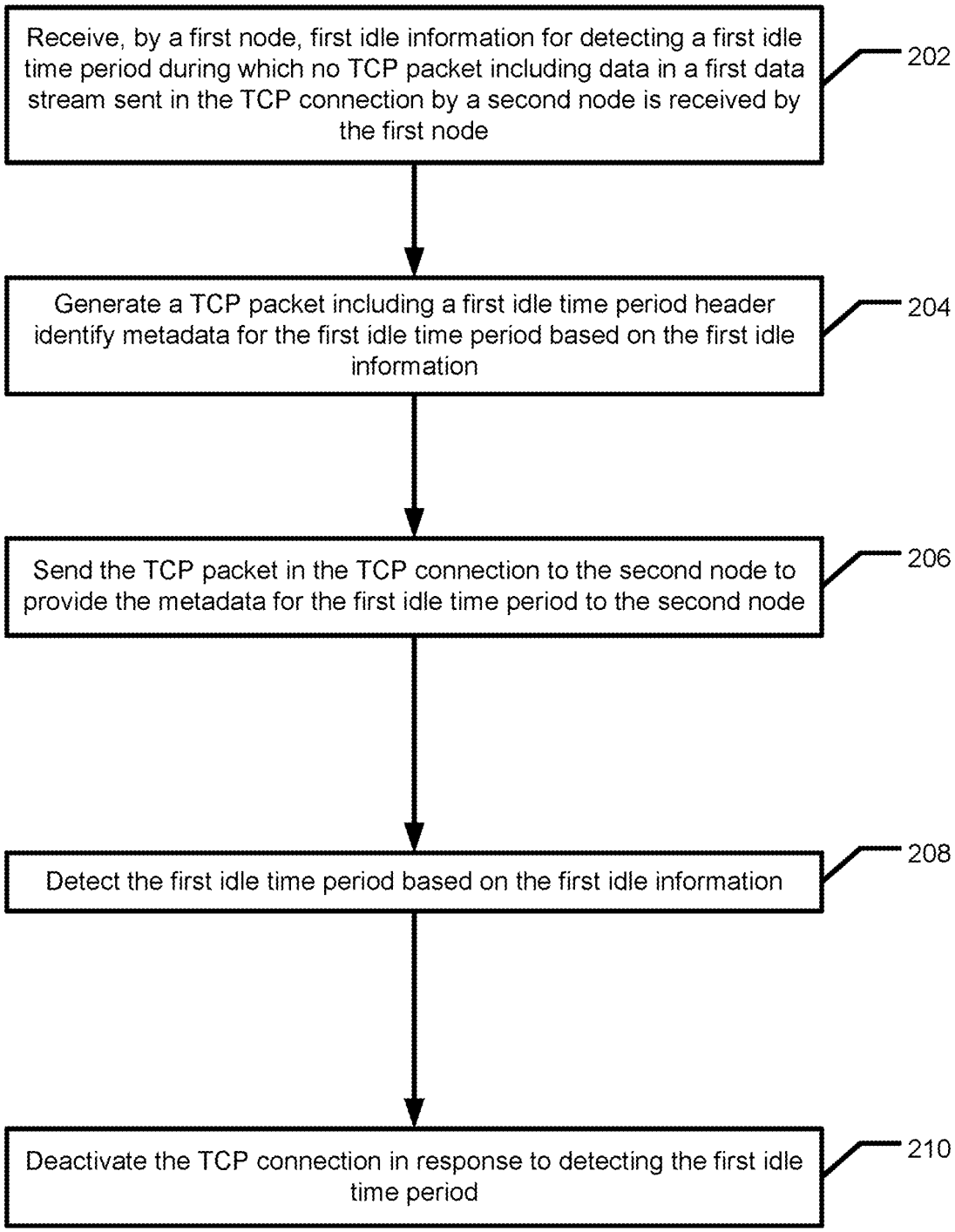
Receive, by a first node, first idle information for detecting a first idle time period during which no TCP packet including data in a first data stream sent in the TCP connection by a second node is received by the first node
202
Generate a TCP packet including a first idle time period header identify metadata for the first idle time period based on the first idle information
204
Send the TCP packet in the TCP connection to the second node to provide the metadata for the first idle time period to the second node
206
Detect the first idle time period based on the first idle information
208
Deactivate the TCP connection in response to detecting the first idle time period
210

Fig. 2

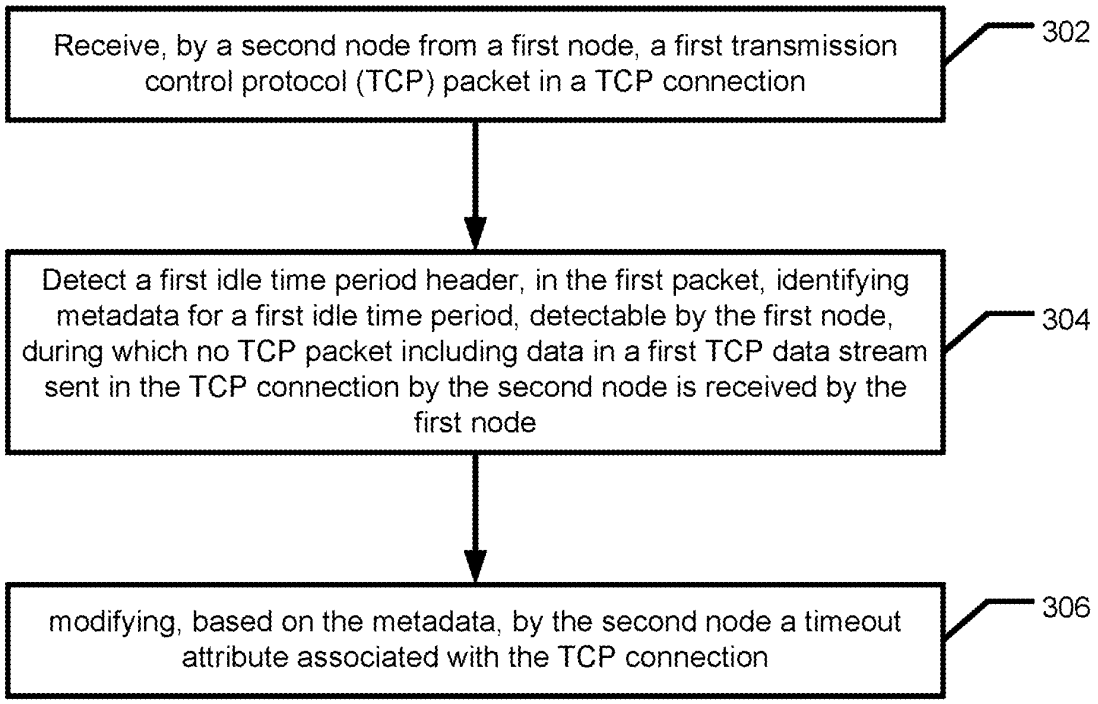
Receive, by a second node from a first node, a first transmission control protocol (TCP) packet in a TCP connection
302
Detect a first idle time period header, in the first packet, identifying metadata for a first idle time period, detectable by the first node, during which no TCP packet including data in a first TCP data stream sent in the TCP connection by the second node is received by the first node
304
modifying, based on the metadata, by the second node a timeout attribute associated with the TCP connection
306

Fig. 3

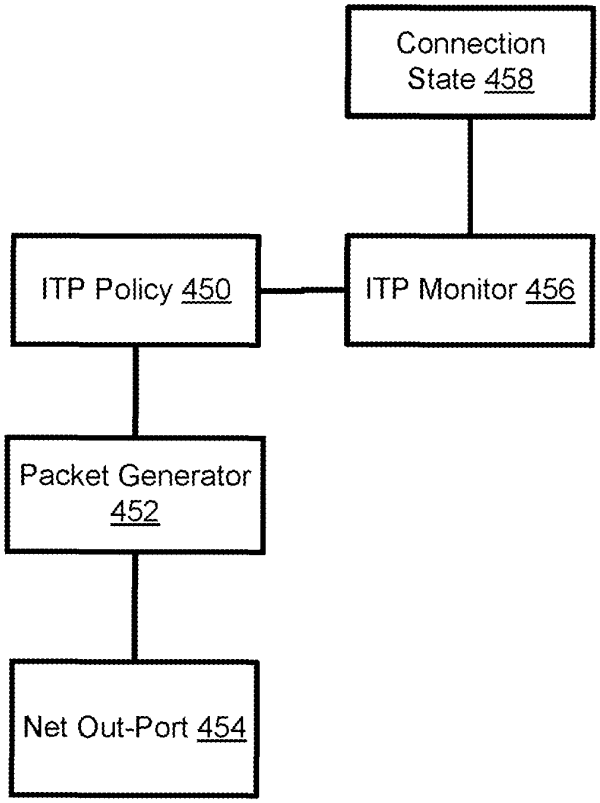
Connection State 458
ITP Policy 450
ITP Monitor 456
Packet Generator 452
Net Out-Port 454

Fig. 4a

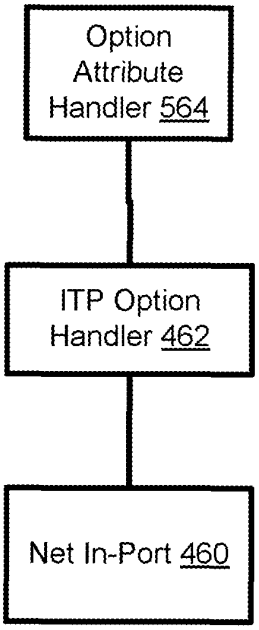
Option Attribute Handler 564
ITP Option Handler 462
Net In-Port 460

Fig. 4b

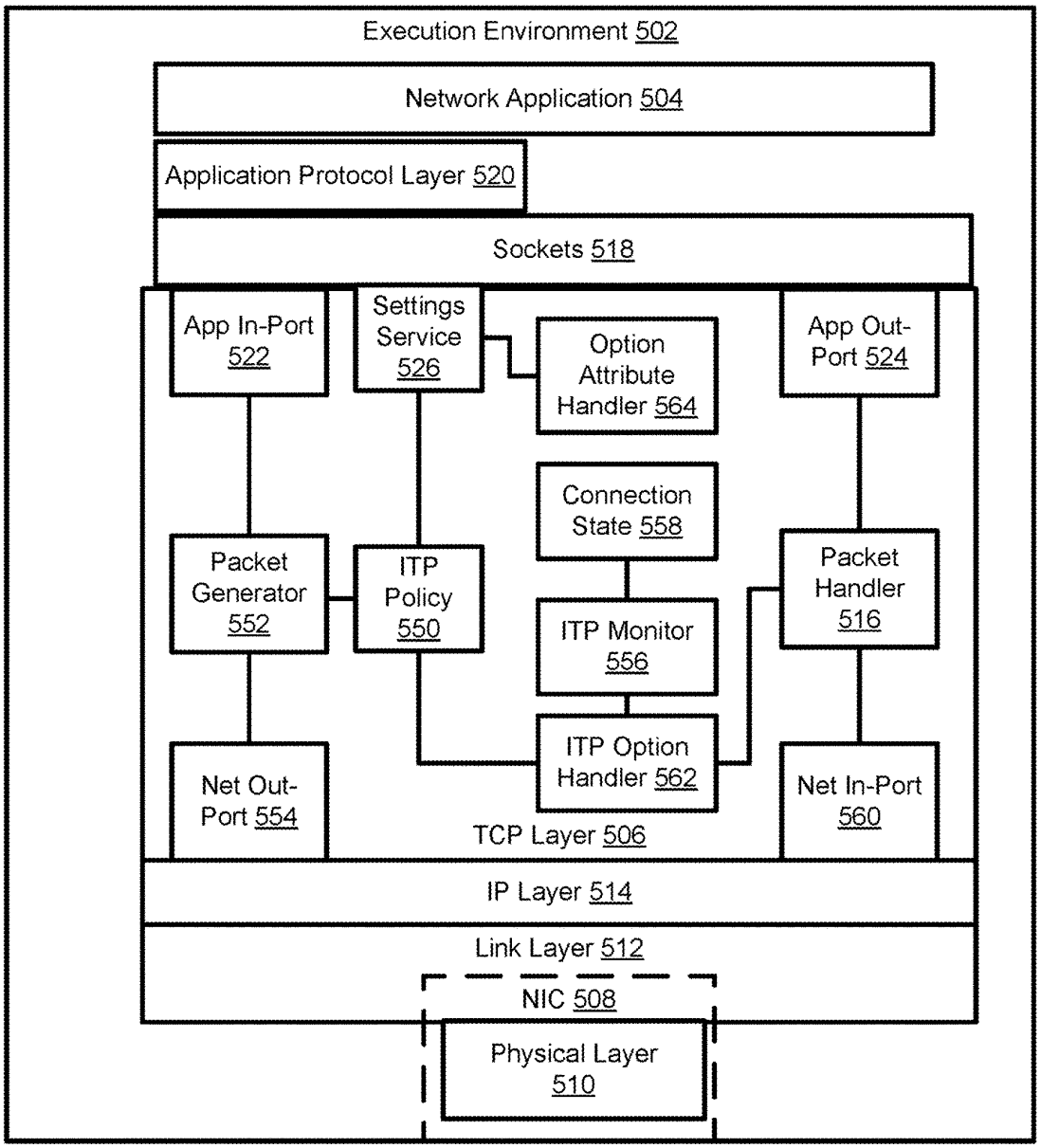
Execution Environment 502
Network Application 504
Application Protocol Layer 520
Sockets 518
App In-Port 522
Settings Service 526
Option Attribute Handler 564
App Out-Port 524
Connection State 558
Packet Generator 552
ITP Policy 550
ITP Monitor 556
Packet Handler 516
ITP Option Handler 562
Net Out-Port 554
Net In-Port 560
TCP Layer 506
IP Layer 514
Link Layer 512
NIC 508
Physical Layer 510

Fig. 5

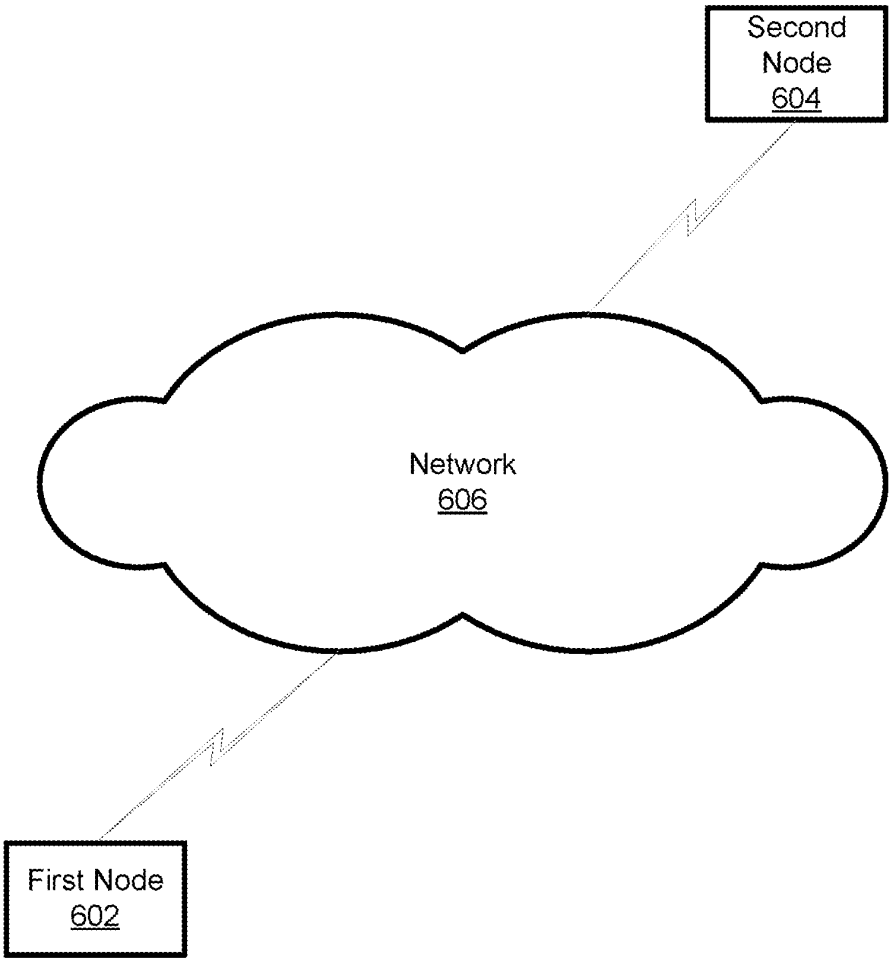

Fig. 6

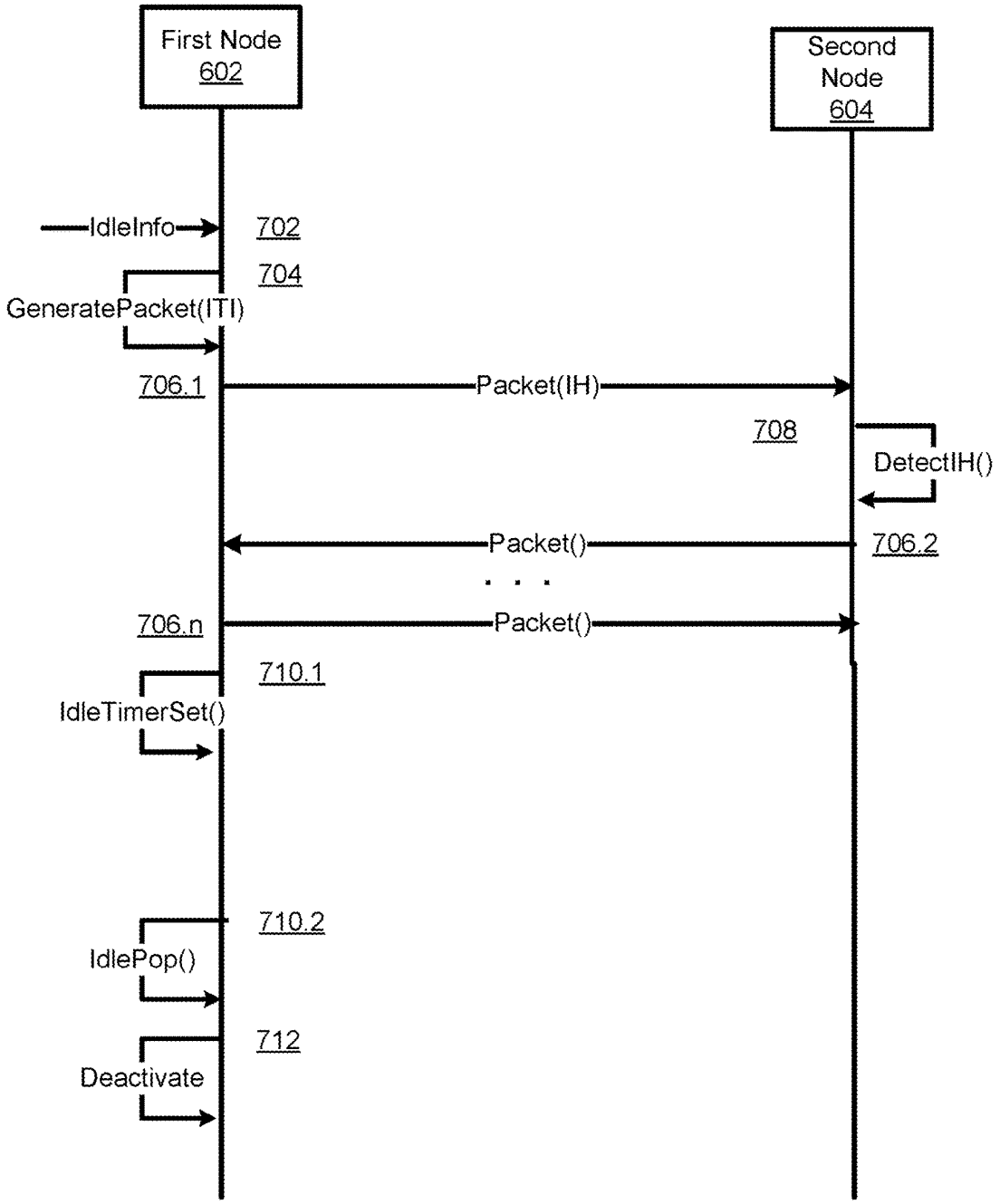
First Node
602
Second
Node
604
IdleInfo
702
704
GeneratePacket(ITI)
706.1
Packet(IH)
708
DetectIH()
Packet()
706.2
706.n
Packet()
710.1
IdleTimerSet()
710.2
IdlePop()
712
Deactivate

Fig. 7

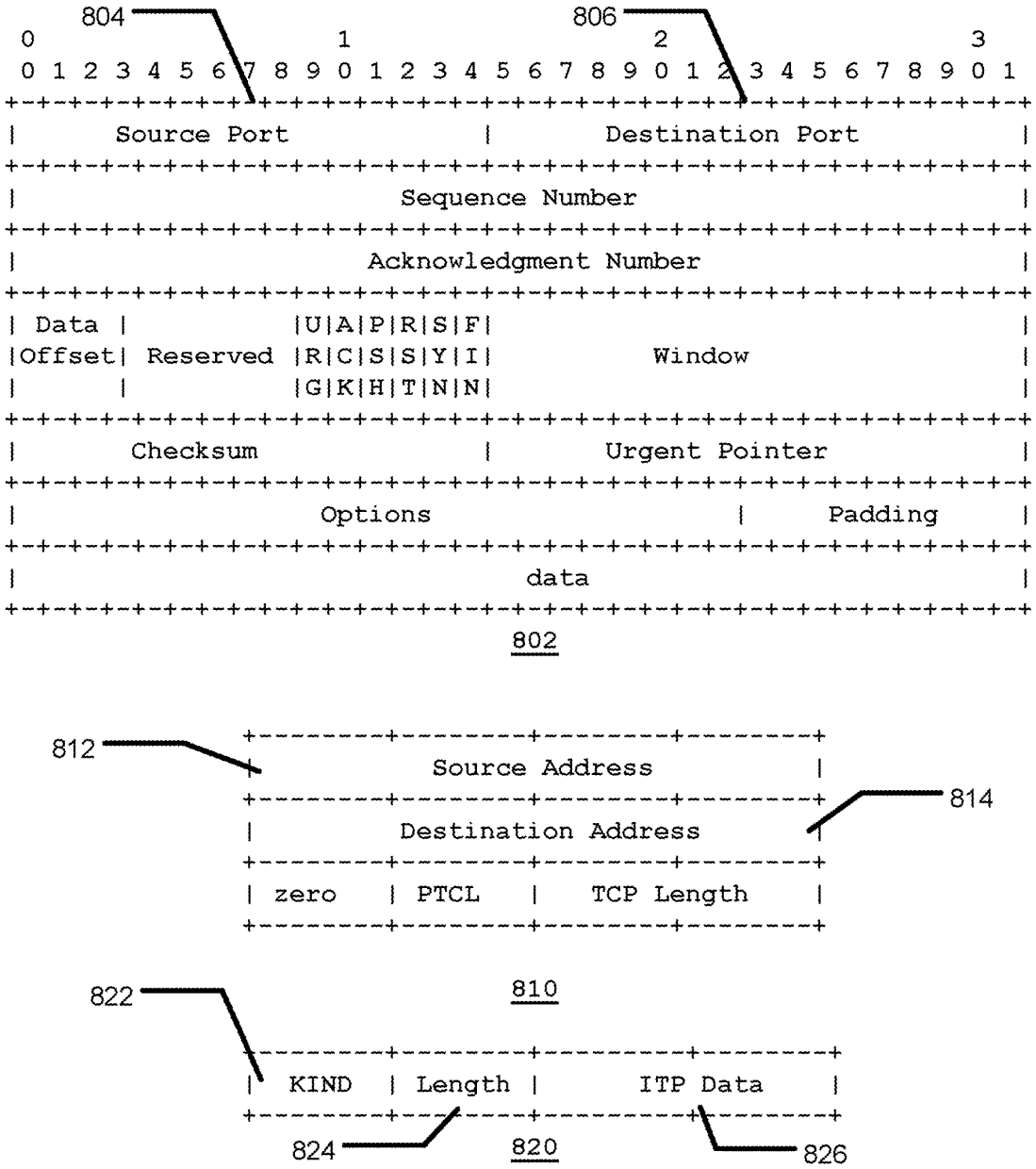

Figures are adapted from RFC 793

Fig. 8

METHODS, SYSTEMS, AND COMPUTER PROGRAM PRODUCTS FOR SHARING INFORMATION FOR DETECTING AT LEAST ONE TIME PERIOD FOR A CONNECTION

RELATED APPLICATIONS

This application is a continuation of, and claims priority to U.S. patent application Ser. No. 17/148,824 entitled "METHODS, SYSTEMS, AND COMPUTER PROGRAM PRODUCTS FOR SHARING INFORMATION FOR DETECTING AT LEAST ONE TIME PERIOD FOR A CONNECTION," filed on Jan. 14, 2021, which in turn is a continuation of, and claims priority to U.S. patent application Ser. No. 16/914,267 entitled "METHODS, SYSTEMS, AND COMPUTER PROGRAM PRODUCTS FOR SHARING INFORMATION FOR DETECTING AN IDLE TCP CONNECTION," filed on Jun. 26, 2020, which in turn is a continuation of, and claims priority to U.S. patent application Ser. No. 16/368,811 entitled "METHODS, SYSTEMS, AND COMPUTER PROGRAM PRODUCTS FOR SHARING INFORMATION FOR DETECTING AN IDLE TCP CONNECTION," filed on Mar. 28, 2019, which in turn is a continuation of, and claims priority to U.S. patent application Ser. No. 16/040,522, now U.S. Pat. No. 10,375,215, entitled "METHODS, SYSTEMS, AND COMPUTER PROGRAM PRODUCTS FOR SHARING INFORMATION FOR DETECTING AN IDLE TCP CONNECTION," filed on Jul. 19, 2018, which in turn, is a continuation of, and claims priority to U.S. patent application Ser. No. 15/915,047, now U.S. Pat. No. 10,075,564, entitled "METHODS, SYSTEMS, AND COMPUTER PROGRAM PRODUCTS FOR SHARING INFORMATION FOR DETECTING AN IDLE TCP CONNECTION," filed on Mar. 7, 2018 which, in turn, is a continuation of, and claims priority to U.S. patent application Ser. No. 15/694,802, now U.S. Pat. No. 9,923,995, entitled "METHODS, SYSTEMS, AND COMPUTER PROGRAM PRODUCTS FOR SHARING INFORMATION FOR DETECTING AN IDLE TCP CONNECTION," filed on Sep. 3, 2017 which, in turn, is a continuation-in-part of, and claims priority to U.S. patent application Ser. No. 14/667,642, entitled "METHODS, SYSTEMS, AND COMPUTER PROGRAM PRODUCTS FOR SELECTING A RESOURCE BASED ON A MEASURE OF A PROCESSING COST," filed on Mar. 24, 2015 which, in turn, is a continuation-in-part of and claims priority to U.S. patent application Ser. No. 13/477,402, entitled "METHODS, SYSTEMS, AND COMPUTER PROGRAM PRODUCTS FOR SHARING INFORMATION FOR DETECTING AN IDLE TCP CONNECTION," filed May 22, 2012 which is a continuation of and claims priority to U.S. patent application Ser. No. 12/714,454, now U.S. Pat. No. 8,219,606, entitled "METHODS, SYSTEMS, AND COMPUTER PROGRAM PRODUCTS FOR SHARING INFORMATION FOR DETECTING AN IDLE TCP CONNECTION," filed Feb. 27, 2010.

U.S. patent application Ser. No. 12/714,454, entitled "METHODS, SYSTEMS, AND COMPUTER PROGRAM PRODUCTS FOR SHARING INFORMATION FOR DETECTING AN IDLE TCP CONNECTION," filed Feb. 27, 2010 is incorporated herein by reference in its entirety for all purposes.

This application is related to the following commonly owned U.S. patent applications, the entire disclosure of which is incorporated by reference herein in its entirety for all purposes: application Ser. No. 12/714,063 filed on 2010 Feb. 26, entitled "Methods, Systems, and Program Products for Detecting an Idle TCP Connection".

BACKGROUND

Various implementations of the transmission control protocol (TCP) in network nodes support a number of options that are not negotiated or even communicated between or among any of the nodes. Some of these options are included in the specification of the TCP while others are not. For example, the TCP keep-alive option is supported by a number of implementations of the TCP. It is not, however, part of the TCP specification as described in "Request for Comments" (RFC) document RFC 793 edited by John Postel, titled "Transmission Control Protocol, DARPA Internet Program Internet Protocol Specification" (September 1981), which is incorporated here in its entirety by reference. One, both, or neither node including an endpoint in a TCP connection may support a keep-alive option for the connection. Each node supports or does not support keep-alive for a TCP connection based on each node's requirements without consideration for the other node in the TCP connection.

With respect to the keep-alive option, some argue that it is unnecessary and that it can waste network bandwidth. Some of these critics point out that a keep-alive packet can bring down a TCP connection. Further, since nodes including endpoints in a TCP connection do not cooperate in supporting the keep-alive option, the nodes may operate in opposition to one another and/or may waste resources by duplicating function, according to critics of the keep-alive option.

Proponents of the keep-alive option claim there is a benefit to detecting a dead peer/partner endpoint sooner. A node providing TCP keep-alive can also indirectly detect when a network is so congested that two nodes with endpoints in a TCP connection are effectively disconnected. Proponents argue that keep-alive can keep an inactive TCP connection open. For example, some network nodes such as firewalls are configured to close TCP connections determined to be idle or inactive in order to recover resources. Keep-alive can prevent this. This is good from the perspective of the node sending keep-alive packets, but the keep-alive packets might cause the firewall to waste resources and possibly block or terminate TCP connections with other nodes.

TCP keep-alive and the debate of its benefits and faults have been around for decades. To date no mechanism to allow two TCP connection endpoints to cooperate in supporting the keep-alive option has been proposed or implemented. The broader issue of enabling cooperation and negotiation between nodes in a TCP connection in detecting and managing idle, underactive, and/or dead TCP connections remains unaddressed.

Accordingly, there exists a need for methods, systems, and computer program products for sharing information for detecting an idle TCP connection.

SUMMARY

The following presents a simplified summary of the disclosure in order to provide a basic understanding to the reader. This summary is not an extensive overview of the disclosure and it does not identify key/critical elements of the invention or delineate the scope of the invention. Its sole

purpose is to present some concepts disclosed herein in a simplified form as a prelude to the more detailed description that is presented later.

In various embodiments, a method, apparatus, and computer program product are provided to: receive first information on which at least a first duration for detecting a first type of time period is based; generate a first packet including a first parameter field identifying first metadata for use in determining a second duration for detecting the first type of time period; set up a first connection, by sending, from the first node to a second node, the first packet to provide the first metadata to the second node, for use by the second node in determining the second duration for detecting the first type of time period; in response to detecting, based on the first duration and by the first node during at least a portion of the first connection including at least a portion of the first connection set up, a first time period of the first type of time period, at least partially close the first connection; and in response to detecting, based on the second duration and by the first node after the first duration is changed to the second duration, a second time period of the first type of time period, at least partially close the first connection.

BRIEF DESCRIPTION OF THE DRAWINGS

Objects and advantages of the present invention will become apparent to those skilled in the art upon reading this description in conjunction with the accompanying drawings, in which like reference numerals have been used to designate like or analogous elements, and in which:

FIG. **1** is a block diagram illustrating an exemplary hardware device included in and/or otherwise providing an execution environment in which the subject matter may be implemented;

FIG. **2** is a flow diagram illustrating a method for sharing information for detecting an idle TCP connection according to an aspect of the subject matter described herein;

FIG. **3** is a flow diagram illustrating another method for sharing information for detecting an idle TCP connection according to another aspect of the subject matter described herein;

FIG. **4***a* and FIG. **4***b* show a block a diagram illustrating an arrangement of components for sharing information for detecting an idle TCP connection according to a further aspect of the subject matter described herein;

FIG. **5** is a block diagram illustrating an arrangement of components for sharing information for detecting an idle TCP connection according to still another aspect of the subject matter described herein;

FIG. **6** is a network diagram illustrating an exemplary system for sharing information for detecting an idle TCP connection according to an aspect of the subject matter described herein;

FIG. **7** is a message flow diagram illustrating an exemplary data and execution flow for sharing information for detecting an idle TCP connection according to an aspect of the subject matter described herein; and

FIG. **8** is a diagram illustrating a structure for a packet transmitted via a network according to an aspect of the subject matter described herein.

DETAILED DESCRIPTION

An exemplary device included in an execution environment that may be configured according to the subject matter is illustrated in FIG. **1**. An execution environment includes an arrangement of hardware and, optionally, software that may be further configured to include an arrangement of components for performing a method of the subject matter described herein.

An execution environment includes and/or is otherwise provided by one or more devices. An execution environment may include a virtual execution environment including software components operating in a host execution environment. Exemplary devices included in or otherwise providing suitable execution environments for configuring according to the subject matter include personal computers, notebook computers, tablet computers, servers, hand-held and other mobile devices, multiprocessor devices, distributed devices, consumer electronic devices, and/or network-enabled devices. Those skilled in the art will understand that the components illustrated in FIG. **1** are exemplary and may vary by particular execution environment.

FIG. **1** illustrates hardware device **100** included in execution environment **102** which includes instruction-processing unit (IPU) **104**, such as one or more microprocessors; physical IPU memory **106** including storage locations identified by addresses in a physical memory address space of IPU **104**; persistent secondary storage **108**, such as one or more hard drives and/or flash storage media; input device adapter **110**, such as key or keypad hardware, keyboard adapter, and/or mouse adapter; output device adapter **112**, such as a display or audio adapter for presenting information to a user; a network interface, illustrated by network interface adapter **114**, for communicating via a network such as a LAN and/or WAN; and a communication mechanism that couples elements **104-114**, illustrated as bus **116**. Elements **104-114** may be operatively coupled by various means. Bus **116** may comprise any type of bus architecture, including a memory bus, a peripheral bus, a local bus, and/or a switching fabric.

IPU **104** is an instruction execution machine, apparatus, or device. Exemplary IPUs include one or more microprocessors, digital signal processors (DSP), graphics processing units (GPU), application-specific integrated circuits (ASIC), and/or field programmable gate arrays (FPGA).

IPU **104** may access machine code instructions and data via one or more memory address spaces in addition to the physical memory address space. A memory address space includes addresses identifying locations in an IPU memory. IPU **104** may have more than one IPU memory. Thus, IPU **104** may have more than one memory address space. IPU **104** may access a location in an IPU memory by processing an address identifying the location. The processed address may be in an operand of a machine code instruction and/or may be identified in a register or other portion of IPU **104**.

FIG. **1** illustrates virtual IPU memory **118** spanning at least part of physical IPU memory **106** and at least part of persistent secondary storage **108**. Virtual memory addresses in a memory address space may be mapped to physical memory addresses identifying locations in physical IPU memory **106**. An address space for identifying locations in a virtual IPU memory is referred to as a virtual memory address space; its addresses are referred to as virtual memory addresses; and its IPU memory is known as a virtual IPU memory or virtual memory. The term IPU memory may refer to physical IPU memory **106** and/or virtual IPU memory **118** depending on the context in which the term is used.

Various types of memory technologies may be included in physical IPU memory **106**. Exemplary memory technologies include static random access memory (SRAM) and/or dynamic RAM (DRAM) including variants such as dual data rate synchronous DRAM (DDR SDRAM), error correcting

code synchronous DRAM (ECC SDRAM), and/or RAMBUS DRAM (RDRAM). Physical IPU memory **106** may include volatile memory as illustrated in the previous sentence and/or may include nonvolatile memory such as nonvolatile flash RAM (NVRAM) and/or read-only memory (ROM).

Persistent secondary storage **108** may include one or more flash memory storage devices, one or more hard disk drives, one or more magnetic disk drives, and/or one or more optical disk drives. Persistent secondary storage may include removable media. The drives and their associated computer-readable storage media provide volatile and/or nonvolatile storage for computer readable instructions, data structures, program components, and other data for execution environment **102**.

Execution environment **102** may include software components stored in persistent secondary storage **108**, in remote storage accessible via a network, and/or in an IPU memory. FIG. **1** illustrates execution environment **102** including operating system **120**, one or more applications **122**, other program code and/or data components illustrated by other libraries and subsystems **124**.

Execution environment **102** may receive user-provided information via one or more input devices illustrated by input device **128**. Input device **128** provides input information to other components in execution environment **102** via input device adapter **110**. Execution environment **102** may include an input device adapter for a keyboard, a touch screen, a microphone, a joystick, a television receiver, a video camera, a still camera, a document scanner, a fax, a phone, a modem, a network adapter, and/or a pointing device, to name a few exemplary input devices.

Input device **128** included in execution environment **102** may be included in device **100** as FIG. **1** illustrates or may be external (not shown) to device **100**. Execution environment **102** may include one or more internal and/or external input devices. External input devices may be connected to device **100** via corresponding communication interfaces such as a serial port, a parallel port, and/or a universal serial bus (USB) port. Input device adapter **110** receives input and provides a representation to bus **116** to be received by IPU **104**, physical IPU memory **106**, and/or other components included in execution environment **102**.

Output device **130** in FIG. **1** exemplifies one or more output devices that may be included in and/or may be external to and operatively coupled to device **100**. For example, output device **130** is illustrated connected to bus **116** via output device adapter **112**. Output device **130** may be a display device. Exemplary display devices include liquid crystal displays (LCDs), light emitting diode (LED) displays, and projectors. Output device **130** presents output of execution environment **102** to one or more users. In some embodiments, an output device is a device such as a phone, a joystick, and/or a touch screen. In addition to various types of display devices, exemplary output devices include printers, speakers, tactile output devices such as motion producing devices, and other output devices producing sensory information detectable by a user.

A device included in or otherwise providing an execution environment may operate in a networked environment communicating with one or more devices (not shown) via one or more network interfaces. The terms "communication interface" and "network interface" are used interchangeably. FIG. **1** illustrates network interface adapter **114** as a network interface included in execution environment **102** to operatively couple device **100** to a network. The terms "network node" and "node" in this document both refer to a device having a network interface operatively coupled to a network.

Exemplary network interfaces include wireless network adapters and wired network adapters. Exemplary wireless networks include a BLUETOOTH network, a wireless 802.11 network, and/or a wireless telephony network (e.g., a cellular, PCS, CDMA, and/or GSM network). Exemplary wired networks include various types of LANs, wide area networks (WANs), and personal area networks (PANs). Exemplary network adapters for wired networks include Ethernet adapters, Token-ring adapters, FDDI adapters, asynchronous transfer mode (ATM) adapters, and modems of various types. Exemplary networks also include intranets and internets such as the Internet.

FIG. **2** is a flow diagram illustrating a first method for sharing information for detecting an idle TCP connection according to an exemplary aspect of the subject matter described herein. FIG. **3** is a flow diagram illustrating a second method for sharing information for detecting an idle TCP connection according to an exemplary aspect of the subject matter described herein. FIG. **4***a* is a block diagram illustrating a system for sharing information for detecting an idle TCP connection according to the first method in FIG. **2**. FIG. **4***b* is a block diagram illustrating a system for sharing information for detecting an idle TCP connection according to the second method in FIG. **3**. It is expected that many, if not most, systems configured to perform one of the methods illustrated in FIG. **2** and FIG. **3** will also be configured to perform the other method.

A system for sharing information for detecting an idle TCP connection according to the method illustrated in FIG. **2** includes an execution environment, such as execution environment **102** in FIG. **1**, including an instruction processing unit, such as IPU **104**, configured to process an instruction included in at least one of an idle time period policy component **450**, a packet generator component **452**, and a net out-port component **454**, a idle time period monitor component **456**, and a connection state component **458** illustrated in FIG. **4***a*.

A system for sharing information for detecting an idle TCP connection performing the method illustrated in FIG. **3** includes an execution environment, such as execution environment **102** in FIG. **1**, including an instruction processing unit, such as IPU **104**, configured to process an instruction included in at least one of a net in-port component **460**, an idle time period option handler component **462**, an option attribute handler component **464** illustrated in FIG. **4***b*.

Components illustrated in FIG. **4***a* may be adapted for performing the method illustrated in FIG. **2** in a number of execution environments. Components illustrated in FIG. **4***b* may be adapted for performing the method illustrated in FIG. **3** in a number of execution environments. FIG. **5** is a block diagram illustrating adaptations and/or analogs of the components of FIG. **4***a* and FIG. **4***b* in exemplary execution environment **502** including or otherwise provided by one or more nodes. The method depicted in FIG. **2** and the method depicted in FIG. **3** may be carried out by some or all of the exemplary components and/or their analogs.

The components illustrated in FIG. **4** and FIG. **5** may be included in or otherwise may be combined with some or all of the components of FIG. **1** to create a variety of arrangements of components according to the subject matter described herein.

FIG. **6** illustrates first node **602** and second node **604** as exemplary devices included in and/or otherwise adapted for providing a suitable execution environment, such as execution environment **502** illustrated in FIG. **5**, for an adaptation

of the arrangement of components in FIG. **4***a* and an adaptation of the arrangement of components in FIG. **4***b*. As illustrated in FIG. **6**, first node **602** and second node **604** are operatively coupled to network **606** via respective network interfaces enabling first node **602** and second node **604** to communicate. FIG. **7** is a message flow diagram illustrating an exemplary exchange of messages within and between first node **602** and second node **604** according to the subject matter described herein.

As stated, the various adaptations of the arrangements of components in FIG. **4***a* and in FIG. **4***b* described herein are not exhaustive.

In FIG. **5**, execution environment **502** illustrates a network application **504** operating in a node configured to communicate with one or more other nodes via the TCP supported by TCP layer component **506**. For example, first node **602** may be included in and/or provide execution environment **502**. Network application **504** may be a first application configured to communicate with an application operating in second node **604** via network **606**. Second node **604** may be included in and/or provide another instance of execution environment **502**. The operation of both first node **602** and second node **604** are described with respect to execution environment **502**. For ease of illustration, both first node **602** and second node **604** are configured with adaptations of the arrangement in FIG. **4***a* and the arrangement in FIG. **4***b*. As such, the description of components and corresponding operations with respect to execution environment **502** in FIG. **5** is applicable to both first node **602** and second node **604** in FIG. **6**.

In FIG. **5**, network interface card (NIC) **508** is an exemplification of a network interface illustrated in FIG. **1** by network interface adapter **114**. NIC **508** includes a physical layer component **510** operatively coupling execution environment **502** to one or more physical media for carrying communication signals. The media may be wired, such as an Ethernet LAN operating over CAT 6 cabling, or may be wireless such as an 802.11n LAN. Other exemplary physical layer protocols and corresponding media are identified above.

NIC **508** may also include a portion of link layer component **512**. Link layer component **512** may provide for communication between two nodes in a point-to-point communication and/or two nodes in a local area network (LAN). Exemplary link layers and, their protocols have been described above including FDDI, ATM, and Ethernet. A portion of link layer component **512** is external to NIC **508**. The external portion may be realized as a device driver for NIC **508**.

Link layer component **512** may receive data formatted as one or more internet protocol (IP) packets from internet protocol (IP) layer component **514**. Link layer component **512** packages data from IP layer component **514** according to the particular link layer protocol supported. Analogously, link layer component **512** interprets data, received as signals transmitted by the physical media operatively coupled to physical layer component **510**, according to a particular link layer protocol supported. Link layer component **512** may strip off link layer specific data and transfer the payload of link layer transmissions to IP layer component **514**.

IP layer component **514** illustrated in FIG. **5** is configured to communicate with one or more remote nodes over a LAN and/or a network of networks such as an intranet or the Internet. IP layer component **514** may receive data formatted as TCP packets from TCP layer component **506**. IP layer component **514** packages data from TCP layer component **506** into IP packets for transmission across a network. The network may be and/or may include an internet. Analogously, IP layer component **514** interprets data, received from link layer component **512** as IP protocol data and detects IP packets in the received data. IP layer component **514** may strip off IP layer specific data and transfer the payload of one or more IP packets to TCP layer component **506**.

In FIG. **5**, IP layer component **514** is operatively coupled to TCP layer component **506**. TCP layer component **506** is configured to provide a TCP connection over network **606** for sending and/or receiving packets included in the TCP connection between two nodes exemplified by first node **602** and second node **604**.

In a TCP connection including first node **602** and second node **604**, first node **602** may include a first TCP connection endpoint and second node **604** may include a second TCP connection endpoint. The first and second TCP connection endpoints identify the TCP connection. The TCP connection may have other identifiers, in addition to the included endpoints.

Components of execution environment **502**, in an aspect, may interoperate with TCP layer component **506** directly. In another aspect, one or more components, such as network application **504**, may interoperate with TCP layer component **506** indirectly. Network application **504** may exchange data with TCP layer component **506** via sockets component **518** and/or an analog of sockets component **518**. Alternatively or additionally, network application **504** may communicate with a remote node via an application protocol layer illustrated by application protocol layer component **520**. Many application protocols currently exist and new application protocols will be developed. Exemplary application layer protocols include hypertext transfer protocol (HTTP), file transfer protocol (FTP), and extensible messaging and presence protocol (XMPP).

TCP layer component **506** in FIG. **5** may receive data from any of various sources for transmitting in corresponding TCP connections to various corresponding identified TCP connection endpoints in one or more network nodes. FIG. **5** illustrates application in-port (app in-port) component **522** providing an interface component for receiving data to transmit in a TCP connection. FIG. **5** illustrates TCP layer component **506** includes packet generator component **552** configured to package data received by application in-port component **522** for transmitting in one or more TCP packets. The one or more TCP packets are provided to IP layer component **514** via net out-port component **554** exemplifying an output interface component.

Analogously, TCP layer component **506** interprets data received from IP layer component **514** via net in-port component **560**. The data is interpreted as TCP data and TCP packets are detected in the received data by net in-port component **560** and/or packet handler component **516**. FIG. **5** illustrates TCP layer component **506** includes packet handler component **516** to strip off and/or otherwise process TCP layer specific data. Packet handler component **516** interoperates with application out-port (app out-port) component **524** to transfer data in the TCP packet included in a TCP data stream to sockets component **518**, application protocol layer **520**, network application **504**, and/or other components associated with the local endpoint of the TCP connection. Detailed information on the operation of TCP is included in RFC 793.

With reference to the method illustrated in FIG. **2**, block **202** illustrates the method includes receiving, by a first node, first idle information for detecting a first idle time period during which no TCP packet including data in a first data

stream sent in the TCP connection by a second node is received by the first node. Accordingly, a system for sharing information for detecting an idle TCP connection includes means for receiving, by a first node, first idle information for detecting a first idle time period during which no TCP packet including data in a first data stream sent in the TCP connection by a second node is received by the first node. For example, as illustrated in FIG. **4***a*, idle time period policy component **450** is configured for receiving, by a first node, first idle information for detecting a first idle time period during which no TCP packet including data in a first data stream sent in the TCP connection by a second node is received by the first node.

FIG. **5** illustrates idle time period (ITP) policy component **550** as an adaptation of and/or analog of ITP policy component **450** in FIG. **4***a*. One or more idle time period policy components **550** operate in execution environment **502**.

Message **702** in FIG. **7** illustrates a communication including and/or otherwise identifying idle information received by ITP policy component **550**. Message **702** may take various forms in various aspects. Exemplary forms for message **702** include a function/method invocation, a message passed via a message queue, data transmitted via a pipe, a message received via a network, and/or a communication via a shared location in IPU memory and/or secondary storage.

Idle information may be received from a configuration storage location for TCP layer component **506** in an IPU memory and/or in secondary storage **108**. The configured idle information may be maintained and/or otherwise managed by settings service component **526** configured to maintain and/or manage various options or settings for TCP layer component **506** and/or one or more TCP connections.

In an aspect, network application **504** provides idle information to ITP policy component **550** via settings service component **526** interoperating with sockets component **518**. Sockets component **518** and/or TCP layer component **506** may support TCP options applicable globally for some or all TCP connections and/or may support TCP options on a per connection basis. Per connection TCP options may override global TCP options if global options are also supported. In another aspect, idle information may be received from and/or otherwise received based on information via application protocol layer **520**, via sockets component **518**, and/or directly from network application **504**.

Application protocol layer **520** may provide idle information to ITP policy component **550** via settings service component **526** and, optionally, via sockets component **518**. Idle information provided by application protocol layer **520** may be based on data received from network application **504**, based on a particular configuration of application protocol layer **520**, and/or received from a user and/or administrator of one or both of network application **504** and application protocol layer **520**.

In an aspect, the idle information received may be based on a previous ITP header identified in a packet in the TCP connection received by first node **602** from second node **604**. The previous packet may be received by net in-port component **560**. The previous ITP header may be detected by ITP option handler component **562** interoperating with packet handler component **516**. Idle information may be identified and/or otherwise determined by ITP option handler component **562**. ITP policy component **550** may interoperate with ITP option handler component **562** to receive the idle information.

Idle information received, determined, and/or otherwise identified may include and/or identify a duration of time for detecting an idle time period. The duration may be specified according to various measures of time including seconds, minutes, hours, and/or days.

Alternatively or additionally, idle information may include and/or identify a generator for determining a duration of time for detecting an idle time period. An exemplary generator may include a formula, an expression, a function, a policy, and/or other mechanism for generating and/or otherwise identifying a duration of time.

In an aspect, one or more algorithms for generating a duration of time for detecting an idle time period may be associated with identifiers. The algorithm identifiers may be standardized within a group of nodes including first node **602** and second node **604**. The received idle information may include and/or reference an algorithm identifier. First node **602** and second node **604** may each maintain an association between one or more of the algorithm identifiers and a duration generator such as a function and/or a class configured to perform the identified algorithm.

A duration generator may determine the duration of time for detecting an idle time period based on one or more attributes accessible to one or both of first node **602** and second node **604**. Exemplary attributes include a measure of network latency, a measure of network congestion, an indication of the availability of a particular resource, a user specified attribute, a security attribute, an energy usage attribute, a user attribute such as role of the user, and/or a measure of bandwidth supported by NIC **508** and/or a physical network medium operatively coupled to NIC **508**.

Alternatively or additionally, idle information may include a parameter such as one or more of the attributes identified in the previous paragraph for use in a duration generator for determining a duration of time for measuring and/or otherwise detecting an idle time period.

A TCP connection may be identified by its endpoints. First node **602** and/or second node **604** may include an endpoint of the TCP connection. Alternatively or additionally, first node **602** and/or second node **604** may include a proxy endpoint representing an endpoint in a TCP connection. Nodes, that provide a network address translation (NAT) service, are exemplary nodes including proxy endpoints.

A node including a TCP connection endpoint is referred to as a host. Hosts are typically user devices and/or servers that typically operate at the edge of a network. While endpoints of most TCP connections are not typically included in network nodes for relaying, routing, and/or otherwise forwarding TCP packet data within a network such as routing nodes and switching nodes. Such network nodes may include one or more connection endpoints for one or more respective TCP connections. It should be understood that the term "host" refers to a role played by a device in a network. First node **602** and/or second node **604** may play the role of a host in a TCP connection and/or may be proxy nodes.

A node is referred to as being in or included in a TCP connection when the node includes an endpoint of the connection and/or includes a proxy for a connection endpoint, referred to as a proxy endpoint. A proxy endpoint and an endpoint in a TCP connection may be in the same node or in different nodes.

In FIG. **5**, connection state component **558** may maintain state information for one or more TCP connection endpoints and/or proxy endpoints of corresponding TCP connections included in an instance of an execution environment, such as execution environment **502**, included in and/or provided by first node **602** or second node **604**.

First node **602** and/or second node **604** may play a role of a proxy node for a node including a TCP connection

endpoint. First node **602** and/or second node **604** may include a proxy endpoint representing an endpoint in a TCP connection. A proxy node forwards TCP packet data, sent by a host including a TCP connection endpoint, to another host including a corresponding connection endpoint represented by a proxy endpoint included in the proxy node and vice versa. Exemplary proxy nodes in addition to including routing and/or switching capabilities may include a bridge, a hub, a repeater, a gateway, and a firewall.

In an aspect, a TCP keep-alive option, a TCP user timeout, a retransmission timeout, an acknowledgment timeout, and/or another timeout associated with a TCP connection may be modified based on the first idle information.

For example, in FIG. **5**, ITP policy component **550** operating in first node **602** may modify an attribute of a TCP keep-alive option provided by one or more keep-alive components that may include settings service component **526**. Modifying a keep-alive attribute may include creating the attribute, deleting the attribute, and/or modifying the attribute. ITP policy component **550** may interoperate with settings service component **526**, connection state component **558**, and/or a keep-alive option handler component (not shown) to detect the existence and state of one or more keep-alive attributes in determining whether a keep-alive option is active and/or in identifying its current state.

In response to identifying the idle information, ITP policy component **550** may activate, disable, and/or modify the state of the keep-alive option via interoperation with one or more of settings service component **526**, connection state component **558**, and/or a keep-alive option handler. Thus, in response to identifying the idle information, ITP policy component **550** may prevent and/or alter the time a keep-alive packet is sent to second node **604** from first node **602**.

Alternatively or additionally, ITP policy component **550** operating in first node **602** may modify an attribute associated with an acknowledgment timeout configured for TCP layer component **506**. Modifying an acknowledgment timeout attribute may include creating the attribute, deleting the attribute, and/or modifying the attribute. ITP policy component **550** may interoperate with settings service component **526**, connection state component **558**, and/or an acknowledgment option handler component (not shown) to detect the existence and state of one or more packet acknowledgment attributes. In response to identifying the idle information, ITP policy component **550** may modify the state of the packet acknowledgment option. Thus, in response to identifying the idle information, ITP policy component **550** may prevent and/or alter the time an acknowledgment is sent in a packet in a TCP connection.

Returning to FIG. **2**, block **204** illustrates the method further includes generating a TCP packet including a first idle time period header identifying metadata for the first idle time period based on the first idle information. Accordingly, a system for sharing information for detecting an idle TCP connection includes means for generating a TCP packet including a first idle time period header identifying metadata for the first idle time period based on the first idle information. For example, as illustrated in FIG. **4***a*, packet generator component **452** is configured for generating a TCP packet including a first idle time period header identifying metadata for the first idle time period based on the first idle information.

FIG. **5** illustrates packet generator component **552** as an adaptation of and/or analog of packet generator component **452** in FIG. **4***a*. One or more packet generator components **552** operate in execution environment **502**.

Packet generator component **552** in FIG. **5** may receive idle information and/or information based on the received idle information from ITP policy component **550**. Whether and when packet generator component **552** receives information for including an idle time period (ITP) header in a TCP packet may depend on a current state of the associated TCP connection. In FIG. **5**, ITP policy component **550** may interoperate with connection state component **558** to determine whether and when to provide information to packet generator component **552** for including an ITP header in a TCP packet.

In an aspect, an ITP header may be included in a packet exchanged during setup of TCP connection. RFC 793 describes a "three-way handshake" for establishing a TCP connection. The synchronization requires each side to send it's own initial sequence number and to receive a confirmation of it in acknowledgment from the other side. Each side must also receive the other side's initial sequence number and send a confirming acknowledgment.

1) A→B SYN my sequence number is X
2) A←B ACK your sequence number is X
3) A←B SYN my sequence number is Y
4) A→B ACK your sequence number is Y

Because steps 2 and 3 can be combined in a single message this is called the three way (or three message) handshake.

Other message exchanges may be used in setting up a TCP connection as those skilled in the art will understand. Such other exchanges are not currently supported by the TCP as described in RFC 793. The specified "three-way handshake" and other patterns of message exchange for setting up a TCP connection include packets that are considered to be in the TCP connection for purposes of this disclosure. Including an ITP header may be restricted to packets exchanged in connection setup, excluded from packets exchanged during connection establishment, or allowed in one or more packets exchanged during connection establishments and in packets exchanged after connection setup.

In an aspect, when connection state component **558** and/or ITP policy component **550** determine an ITP header should be included in a TCP packet based on received idle information, packet generator component **552** may include the ITP header in a next TCP packet generated in response to data received via application in-port component **522** for sending to first node **602**. In another aspect, packet generator component **552** may send the ITP header in a TCP packet in the TCP connection with no data included in the TCP data stream sent by first node **602** to second node **604**. Such a packet is referred to as an empty Packet generator component **554** may send the empty TCP packet when TCP layer component **506** has no for data from an application in second node **604** to send in the TCP data stream to first node **602**.

Packet generator component **552** may generate a packet according to the TCP specifications and may include a header identified as an ITP header in accordance with specifications for including TCP option headers in a TCP packet. See RFC 793 for more details. FIG. **8** illustrates a format or structure for a TCP packet **802** as described in RFC 793. Each "+" character in FIG. **8**, indicates a bit-boundary. TCP packet **802** specifies a location and format for including a source port **804** portion including an identifier for an endpoint of the TCP connection for a sending node and a destination port **806** including an identifier for a corresponding endpoint of the TCP connection in a receiving node. IP packet **810** illustrates a format for an IP packet header for an IP packet including TCP packet data. Source address **812** specifies a location and format in an IP header

for including a network address identifying a network interface of the sending node, and destination address **814** identifying a network interface for the receiving node. A network address and a port number identify a connection endpoint in a network. Two endpoints identify a TCP connection.

FIG. **8** also illustrates a format for an exemplary ITP header **820**. A KIND location is specified for including an identifier indicating that the option is an idle time period (ITP) option in an ITP header. Identifiers for option headers are currently under the control of the Internet Assigned Numbers Authority (IANA). Length field **824** identifies a length of an ITP header. An ITP data field **826** is specified for including ITP header information for detecting an idle time period as described herein

Those skilled in the art will recognize given this disclosure that an ITP header may have other suitable formats and may be included in a TCP packet in structures and locations other than those specified for TCP options in RFC 793. An equivalent or analog of an ITP header may be included in a footer of a protocol packet in an extension and/or variant of the current TCP.

ITP data field **826** in FIG. **8** may include and/or otherwise identify metadata for the first idle time period. For example, an ITP data field in a packet may include and/or otherwise identify one or more of a duration of time for detecting an idle time period, a duration generator for determining a duration of time for detecting an idle time period, and a parameter for use in a duration generator for determining a duration of time for measuring and detecting an idle time period.

Message **704** in FIG. **7** illustrates an invocation and/or other access to packet generator component **552** for generating a TCP packet including an ITP header based on received idle information.

Returning to FIG. **2**, block **206** illustrates the method further includes sending the TCP packet in the TCP connection to the second node to provide the metadata for the first idle time period to the second node. Accordingly, a system for sharing information for detecting an idle TCP connection further includes means for sending the TCP packet in the TCP connection to the second node to provide the metadata for the first idle time period to the second node. For example, as illustrated in FIG. **4***a*, the net out-port component **454** is configured for sending the TCP packet in the TCP connection to the second node to provide the metadata for the first idle time period to the second node.

FIG. **5** illustrates net out-port component **554** as an adaptation of and/or analog of net out-port component **454** in FIG. **4***a*. One or more net out-port components **554** operate in execution environment **502**. Net out-port component **554** is illustrated operatively coupled to packet generator component **552**. Net out-port component **554** may receive TCP packet data from packet generator component **552** and interoperate with IP layer component **514** to send the TCP packet in one or more IP packets via network **606** to second node **604**. Message **706.1** in FIG. **7** illustrates a TCP packet including an ITP header sent by first node **602** and received by second node **604**.

In one aspect, an ITP header may be sent to make sending one or more TCP keep-alive packets by a partner node in the connection unnecessary. A receiver of a packet including an ITP header, such as second node **604**, may keep a TCP connection alive based on information in the ITP header.

In another aspect, first node **602** may set a keep-alive timeout attribute based on a duration of the first idle time period identified in the first idle information and/or in the metadata provided to second node **604**. For example, first node **602** may monitor a time period during which no non-empty packets are sent or received in the TCP connection. A keep-alive option handler and/or keep-alive component (not shown) operating in first node **602** may set a keep-alive timer according to the timeout attribute, with a duration that will result in the keep-alive timer expiring before an idle time period can occur. In response to detecting a keep-alive timeout, which may be indicated by the expiration of the keep-alive timer, the keep-alive option handler and/or keep-alive policy component may provide information to packet generator component **552** to generate a TCP keep-alive packet. The packet generator component **552** may provide the generated packet to net out-port component **554** for sending the TCP keep-alive packet to second node **604** to determine whether the TCP connection is active and/or to keep the TCP connection active.

In another aspect, ITP policy component **550** operating in first node **602** may set a timer, analogous to the keep-alive timer described in the previous paragraph that expires before an time period can occur. In response the timer expiring, ITP policy component **550** may provide idle information to packet generator component **552** to generate a TCP packet including a second ITP header. Content of the second ITP header may be based on the first idle information received, data received from second node **604**, information received from a network application that may be from a user, and/or on any information accessible to TCP layer component **506** in execution environment **502** in first node **602**. The TCP packet generated by packet generator component **552** is provided to IP layer component **514** via net out-port component **554** to send to second node **604** in the TCP connection. Along with sending the message, first node **602** may reset and/or otherwise restart detection of the first idle time period. Thus, a second ITP header may be sent in a second TCP packet by first node **602** to second node **602** along with restarting detection of the first idle time period. Alternatively, first node **602** may reset and initiate detection of an idle time period with a different duration than the previous idle time period, based on the idle information for generating the second ITP header.

Returning to FIG. **2**, block **208** illustrates the method further includes detecting the first idle time period based on the first idle information. Accordingly, a system for sharing information for detecting an idle TCP connection further includes means for detecting the first idle time period based on the first idle information. For example, as illustrated in FIG. **4***a*, the idle time period monitor component **456** is configured for idle time period monitor.

FIG. **5** illustrates idle time period monitor component **556** as an adaptation of and/or analog of idle time period monitor component **456** in FIG. **4***a*. One or more idle time period monitor components **556** operate in execution environment **502**.

In an aspect, in response to receiving the first idle information, ITP policy component **550** may store a value representing a duration of time in a configuration storage location. Alternatively, or additionally, ITP policy component **550** may invoke a duration generator to determine a duration of time for detecting the idle time period. The duration generator may be preconfigured for the TCP connection and/or may be identified based on the idle information received. As described, the invoked generator may be invoked with a parameter included in and/or otherwise identified based on the received idle information.

ITP policy component **550** may interoperate with ITP monitor component **556** to identify the duration for detecting

the idle time period. ITP monitor component **556**, in various aspects, may receive information including and/or otherwise identifying a duration of time, a duration generator, and/or a parameter for a duration generator. ITP monitor component **556** may initiate and/or restart a process for detecting an idle time period. In an aspect, ITP monitor component **556** detects and/or otherwise identifies a beginning of a potential idle time period based on one or more specified events.

In an aspect, detecting the first idle time period by ITP monitor component **556** may include detecting a time period in the idle time period during which first node **602** has received acknowledgment for all data sent via the TCP connection in the TCP data stream by first node **602** to second node **604**. Further, the first idle time period may include a time period during which first node **602** has sent one or more TCP packets to second node **604** to acknowledge all data received in a TCP data stream in the TCP connection from second node **604** to first node **602**. Detecting the first idle time period by ITP monitor component **556** may include detecting that all received data has been acknowledged and/or that all sent data has been acknowledged.

In an aspect, ITP policy component **550** may include a policy with a rule indicating that an idle time period cannot begin while a TCP packet sent by first node **602** remains unacknowledged by second node **604**. ITP policy component **550** may prevent ITP monitor component **556** from initiating detection of an idle time period while unacknowledged data exists. In a further aspect, a time duration may be associated and/or included in the policy identifying a limit to a period of waiting to receive acknowledgment of TCP packet data sent by first node **602**. In one aspect, waiting for lack of an acknowledgment for an empty packet does not delay detection of an idle time period, while in another aspect ITP monitor component **556** will not initiate detection while an empty packet remains unacknowledged.

In an aspect, idle information, received by a node may be included in and/or otherwise based on a previous idle time period header identified in a previous TCP packet received in the TCP connection by the node from a remote node prior to sending an ITP header based on the idle information by the node. For example, the first idle information received by ITP policy component **550** in first node **602** may be based on an idle time period header included a TCP packet in the TCP connection sent by second node **604** and received by first node **602** prior to sending the first TCP packet by first node **602**. The exchange of ITP headers may include a negotiation between first node **602** and second node **604**.

A duration of time may be identified based on the idle information received by ITP policy component in first node **602**. A timer may be set according to the identified duration. Detecting the first idle time period may include and/or otherwise may be based on detecting the timer expiration. ITP monitor component **556** may set a timer configured to expire in a time duration identified based on the first idle information received by ITP policy component **550**. The identified duration may be longer, shorter, or equal to a duration of the idle time period. ITP monitor component **556** may use multiple timers. ITP monitor component **556** may recalculate and/or otherwise generate a new idle duration based on the idle information at one or more times during detection of the first idle time period. That is, a duration of an idle time period may be static and/or may be dynamic, changing based on attribute information accessible during the detection process and/or based on one or more duration generators.

Message **710.1** illustrates a call and/or other communication between ITP monitor component **556** and a timer component in first node **602** to set a timer included in detecting an idle time period. Prior to the setting the timer, first node **602** and second node **602** may be active in exchanging TCP packets as illustrated by messages including message **706.2** through message **706.*n***. Those skilled in the art will recognize that detection of an idle time period may not include explicitly and/or directly using a timer. ITP monitor component **556** may monitor other events as a proxy or indirect mechanism for initiating detection and detecting an idle time period.

ITP monitor component **556** may detect one or more events configured to indicate that an idle time period has occurred. For example, expiration of a timer or multiple associated timers may be interpreted by ITP monitor component **556** as marking an occurrence of the first idle time period. Message **710.2** illustrates ITP monitor component **556** receiving information identifying expiration of a timer for detecting the first idle time period.

In a further aspect, in response to detecting the expiration of a timer set as described above, a TCP keep-alive packet may be sent by first node **602** to determine whether the TCP connection is action and/or to keep the TCP connection active. When the keep-alive packet is sent, an acknowledgment timer may be set. If a timeout of the acknowledgment timer is detected indicating no TCP packet has been received acknowledging the keep-alive packet, the first idle time period may be detected in response to and/or otherwise based on the timeout of the acknowledgment timer.

In FIG. **5**, ITP policy component **550** in first node **602** may provide a duration identified based on the received idle information to a keep-alive monitor component (not shown). The keep-alive monitor component may configure a keep-alive timer to expire based on the identified duration. In response to detecting expiration of the keep-alive timer, ITP monitor component **556** may invoke packet generator component **552** to generate a TCP keep-alive packet. First node **602** may send the TCP packet to second node **604**. The TCP keep-alive packet may be sent to prevent detection of an idle time period by second node **604** and/or may otherwise be sent to detect by first node **602** whether the TCP connection is active.

First node **602** may set an acknowledgment timer associated with sending the packet. If the acknowledgment timer expires before a TCP packet is received from second node **602** acknowledging the packet sent, ITP monitor component **556** may detect the idle time period in response to and/or otherwise based on expiration of the acknowledgment timer.

Receiving a packet from second node **604** included in the TCP connection is an event that, in various aspects, may directly and/or indirectly indicate the beginning of a potential idle time period. A potential idle time period may begin at some specified point during and/or after processing a received TCP packet. In one aspect, an empty TCP packet may be received while a potential idle time period is being monitored. That is, a beginning of the potential idle time period has been detected. In response to receiving the empty TCP packet, monitoring of the current potential time period may be aborted. Further, in response to receiving the empty TCP packet, a beginning of a next potential idle time period may be detected.

In FIG. **5**, ITP policy component **550** and ITP monitor component **556** may operate to reset and/or initiate detection of an idle time period in response to receiving an empty TCP packet. First node **602** may receive an empty packet. In response, ITP monitor component **556** may receive an event

and/or other indication to reset detection of an idle time period. Resetting the detecting process may be based on whether or not a received empty TCP packet matches a specified condition. ITP option handler component **562** may be configured to determine whether a received empty TCP packet matches the condition. If ITP option handler component **562** determines the empty packet matches the condition, ITP monitor component **556** may be instructed to reset and/or restart detection of the first idle time period including detecting the beginning of a next potential time period.

The condition may match received TCP packets including ITP headers and/or other TCP option headers. A condition may match a port number and/or other field in TCP packet. A condition may further be based on a network address in an IP header including the TCP packet.

In a further aspect, first node **602** may receive via network **606** from second node **604** a TCP packet in the TCP connection including an second ITP header. Message **706.2** in FIG. **7** illustrates the TCP packet sent by second node **604**. ITP option handler component **562** may identify the second ITP header received from second node **604**. The identified second ITP header may be for detecting by first node **602** an idle time period, during which no TCP packet in the TCP connection is received, by the first node **602** that includes data in the first TCP data stream from second node **604**. The first idle time period may be detected by ITP monitor component **556** in first node **602** based on the second ITP header and based on the received idle information. The second ITP header received in the TCP packet from second node **604** may be based on the first ITP header in the TCP packet sent in the TCP connection by first node **602** to second node **604**.

In some aspects, the first node and second node **604** may continue to exchange ITP headers. Information in the exchanged ITP headers may be based on ITP headers received in the TCP connection and/or on data accessible locally to one or both of the nodes. In some aspects, the exchange may be a negotiation while in other the exchange may simply be informational.

Returning to FIG. **2**, block **210** illustrates the method further includes deactivating the TCP connection in response to detecting the first idle time period. Accordingly, a system for sharing information for detecting an idle TCP connection further includes means for deactivating the TCP connection in response to detecting the first idle time period. For example, as illustrated in FIG. **4***a*, the connection state component **458** is configured for deactivating the TCP connection in response to detecting the first idle time period.

FIG. **5** illustrates connection state component **558** as an adaptation of and/or analog of connection state component **458** in FIG. **4***a*. One or more connection state components **558** operate in execution environment **502**.

When ITP monitor component **556** in first node **602** detects an idle time period, ITP monitor component **556** may provide an indication to connection state component **558**. The indication may indicate that the idle time period for the TCP connection has been detected and/or otherwise may instruct connection state component **558** and/or other components in TCP layer component **506** to deactivate the TCP connection. Message **712** in FIG. **7** illustrates a communication to deactivate the TCP connection communicated in response to detecting the idle time period.

Deactivating the TCP connection may include closing the TCP connection. A TCP connection may be closed using a three-way handshake packet exchange described in RFC 793. Deactivating the TCP connection may include sending a TCP packet by the detecting node to reset the TCP connection. According to RFC 793, first node **602** may send a TCP packet including a reset (RST) bit set to "1" to indicate a connection reset. Deactivating the TCP connection may include, alternatively or additionally, releasing a resource allocated for maintaining and/or activating the TCP connection.

With respect to the method illustrated in FIG. **3**, block **302** illustrates the method includes receiving, by a second node from a first node, a first transmission control protocol (TCP) packet in a TCP connection. Accordingly, a system for sharing information for detecting an idle TCP connection includes means for receiving, by a second node from a first node, a first transmission control protocol (TCP) packet in a TCP connection. For example, as illustrated in FIG. **4***b*, the net in-port component **460** is configured for receiving, by a second node from a first node, a first transmission control protocol (TCP) packet in a TCP connection.

FIG. **5** illustrates net in-port component **560** as an adaptation of and/or analog of net in-port component **460** in FIG. **4***b*. One or more net in-port components **560** operate in execution environment **502**.

As described above, net in-port component **560** in FIG. **5** may operate in an instance of execution environment **502** and/or an analog included in and/or including second node **604**. The TCP packet, illustrated by message **706.1** in FIG. **7** and described above, may be received by net in-port component **560** in second node **604**. The TCP packet may include data in a second TCP data stream sent by first node **602** to second node **604** to deliver to a user of TCP layer component **506** in second node **604** such as network application **504**. Alternatively, the TCP packet may be an empty TCP packet. The received TCP packet may be a packet included in setting up the TCP connection as described above.

Returning to FIG. **3**, block **304** illustrates the method further includes detecting a first idle time period header, in the first packet, identifying metadata for a first idle time period, detectable by the first node, during which no TCP packet including data in a first TCP data stream sent in the TCP connection by the second node is received by the first node. Accordingly, a system for sharing information for detecting an idle TCP connection includes means for detecting a first idle time period header, in the first packet, identifying metadata for a first idle time period, detectable by the first node, during which no TCP packet including data in a first TCP data stream sent in the TCP connection by the second node is received by the first node. For example, as illustrated in FIG. **4***b*, idle time period option handler component **462** is configured for detecting a first idle time period header, in the first packet, identifying metadata for a first idle time period, detectable by the first node, during which no TCP packet including data in a first TCP data stream sent in the TCP connection by the second node is received by the first node.

FIG. **5** illustrates idle time period option handler component **562** as an adaptation of and/or analog of idle time period option handler component **462** in FIG. **4***b*. One or more idle time period option handler components **562** operate in execution environment **502**.

In FIG. **5**, ITP option handler component **562** is operatively coupled to packet handler component **516** The TCP packet, including the ITP header sent by first node **602**, may be received, and identified as a TCP packet by net in-port component **560** operating in second node **604**. As illustrated in FIG. **5**, net in-port component **560** and/or an analog of net in-port component **560** may provide and/or otherwise iden-

tify the received packet to packet handler component **516**. Packet handler component **516** may detect various portions of the TCP packet according to the TPC packet **802** structure as illustrated in FIG. **8**. Alternatively, packet handler component **516** may provide some or all of the packet to various components in TCP layer component **506** to identify portions of the packet according to the TCP specification and/or according to a particular implementation.

The ITP header sent by first node **602** may be received by and/or otherwise identified by ITP option handler component **562**. Message **708** in FIG. **7** exemplifies activation of ITP option handler component **562** for detecting the ITP header in the TCP packet received from first node **602** by second node **604**.

In various aspects, ITP option handler component **562** operating in second node **604** may detect and/or otherwise determine a duration of time for associated with detection of the idle time period by first node **602**, a duration generator, and/or a parameter for a duration generator. The first idle time period header may identify metadata including and/or identifying for detection of the first idle time period by first node **602** a duration of time, a generator for determining a duration of time, and/or an input for determining a duration of time.

Returning to FIG. **3**, block **306** illustrates the method yet further includes modifying, based on the metadata, by the second node a timeout attribute associated with the TCP connection. Accordingly, a system for sharing information for detecting an idle TCP connection includes means for modifying, based on the metadata, by the second node a timeout attribute associated with the TCP connection. For example, as illustrated in FIG. **4***b*, the option attribute handler component **464** is configured for modifying, based on the metadata, by the second node a timeout attribute associated with the TCP connection.

FIG. **5** illustrates option attribute handler component **564** as an adaptation of and/or analog of option attribute handler component **464** in FIG. **4***b*. One or more option attribute handler components **564** operate in execution environment **502**.

In an aspect, ITP option handler component **562** may one or more attribute option handler components **564** to modify one or more corresponding attributes of a keep-alive option, a TCP user timeout, a retransmission timeout, an acknowledgment timeout, and another timeout associated with the TCP connection, in response to identifying the ITP header. The modifying may be based on the content of the ITP header.

For example, ITP option handler component **562** in second node **604** may interoperate with a keep-alive attribute option handler component **564** directly and/or indirectly via settings service component **526**, connection state component **558**, and/or a keep-alive policy component (not shown) to detect the existence and state of one or more keep-alive attributes in determining whether the keep-alive option is active and/or the state of the keep-alive option.

In response to identifying the idle time period header, ITP option handler component **562** may activate, disable, and/or modify the state of the keep-alive option via interoperation with the keep-alive attribute option handler. Thus, in response to identifying the idle information, attribute option handler component **564** may prevent and/or alter the time a keep-alive packet is sent by second node **604** to first node **602**.

Alternatively or additionally, an attribute option handler component **564** may modify an attribute associated with a packet acknowledgment option provided by TCP layer component **506** in first node **602**. Modifying a packet acknowledgment attribute may include creating the attribute, deleting the attribute, and/or modifying the attribute. Attribute option handler component **564** may interoperate with settings service component **526**, connection state component **558**, and/or an acknowledgment policy component (not shown) to detect the existence and state of one or more packet acknowledgment attributes. In response to identifying the idle information, attribute option handler component **564** may modify the state of the packet acknowledgment option. Thus, in response to identifying the idle information, attribute option handler component **564** may prevent and/or alter the time an acknowledgment is sent in a packet data from second node **604** to first node **602** in the TCP connection.

As described herein an ITP header for detecting an idle time period for a TCP connection may serve a number of purposes. A first node in a TCP connection may via an ITP header inform and/or otherwise identify to a second node in the connection one or more durations for detecting an idle time period by one or both nodes. Given multiple purposes, one or more types of ITP headers may be supported and/or an ITP header may be structured to support one or more of the described services. An exchange of ITP headers may be informational and/or may be included in negotiation between two nodes included in a TCP connection. When used in a negotiation, an ITP header may be included in a negotiation protocol that has an identifiable end during a portion of the existence of a TCP connection or may be included in a negotiation that may remain ongoing throughout the existence of a TCP connection. Those skilled in the art will recognize the list of services in this paragraph is not exhaustive.

It should be understood that the various components illustrated in the various block diagrams represent logical components that are configured to perform the functionality described herein and may be implemented in software, hardware, or a combination of the two. Moreover, some or all of these logical components may be combined, some may be omitted altogether, and additional components may be added while still achieving the functionality described herein. Thus, the subject matter described herein may be embodied in many different variations, and all such variations are contemplated to be within the scope of what is claimed.

To facilitate an understanding of the subject matter described above, many aspects are described in terms of sequences of actions that may be performed by elements of a computer system. For example, it will be recognized that the various actions may be performed by specialized circuits or circuitry (e.g., discrete logic gates interconnected to perform a specialized function), by program instructions being executed by one or more instruction processing units, or by a combination of both. The description herein of any sequence of actions is not intended to imply that the specific order described for performing that sequence must be followed.

Moreover, the methods described herein may be embodied in executable instructions stored in a computer readable medium for use by or in connection with an instruction execution machine, system, apparatus, or device, such as a computer-based or processor-containing machine, system, apparatus, or device. As used herein, a "computer readable medium" may include one or more of any suitable media for storing the executable instructions of a computer program in one or more of an electronic, magnetic, optical, electromagnetic, and infrared form, such that the instruction execution

machine, system, apparatus, or device may read (or fetch) the instructions from the computer readable medium and execute the instructions for carrying out the described methods. A non-exhaustive list of conventional exemplary computer readable media includes a portable computer diskette; a random access memory (RAM); a read only memory (ROM); an erasable programmable read only memory (EPROM or Flash memory); optical storage devices, including a portable compact disc (CD), a portable digital video disc (DVD), a high definition DVD (HD-DVD™), a Blu-ray™ disc; and the like.

Thus, the subject matter described herein may be embodied in many different forms, and all such forms are contemplated to be within the scope of what is claimed. It will be understood that various details may be changed without departing from the scope of the claimed subject matter. Furthermore, the foregoing description is for the purpose of illustration only, and not for the purpose of limitation, as the scope of protection sought is defined by the claims as set forth hereinafter together with any equivalents thereof entitled to.

All methods described herein may be performed in any order unless otherwise indicated herein explicitly or by context. The use of the terms "a" and "an" and "the" and similar referents in the context of the foregoing description and in the context of the following claims are to be construed to include the singular and the plural, unless otherwise indicated herein explicitly or clearly contradicted by context. The foregoing description is not to be interpreted as indicating any non-claimed element is essential to the practice of the subject matter as claimed.

I claim:

1. An apparatus, comprising:

a non-transitory memory storing instructions; and

one or more processors in communication with the non-transitory memory, wherein the one or more processors execute the instructions to:

receive first information on which at least a first duration for detecting a first type of time period is based, where the first type of time period does not include a user timeout period of transmission control protocol (TCP);

generate a first packet including a first parameter field identifying first metadata for use in determining a second duration for detecting the first type of time period, where the first packet is not a synchronize (SYN) packet, and is for use in a protocol: that is not TCP, and that is not a TCP extension;

set up a first connection, by sending, from the apparatus to a node, the first packet to provide the first metadata to the node, for use by the node in determining the second duration for detecting the first type of time period, where the first duration is not negotiated during the first connection set up between the apparatus and the node for the first connection, and the second duration is negotiated during the first connection set up between the apparatus and the node for the first connection, and where the first connection set up further includes, in addition to sending the first packet: after sending the first packet, receiving, at the apparatus from the node, a second packet, and after receiving the second packet, sending, from the apparatus to the node, a third packet;

in response to detecting, based on the first duration and by the apparatus during at least a portion of the first connection set up, a first time period of the first type of time period, at least partially close the first connection; and

in response to detecting, based on the second duration and by the apparatus after the first connection set up, a second time period of the first type of time period, at least partially close the first connection.

2. The apparatus of claim **1**, wherein the apparatus is configured such that the first time period is only capable of being detected during the first connection set up.

3. The apparatus of claim **1**, wherein the apparatus is configured such that the second time period is capable of being detected at a time: during the first connection set up, or thereafter during the first connection.

4. The apparatus of claim **1**, wherein the apparatus is configured such that the first duration is used and the second duration is not used for detecting the first type of time period, until a use of the first duration is changed to a use of the second duration after the first connection set up, after which the second duration is used and the first duration is not used for detecting the first type of time period.

5. The apparatus of claim **1**, wherein the apparatus is configured such that the first type of time period includes an idle time period.

6. The apparatus of claim **1**, wherein the apparatus is configured such that only one of the first time period or the second time period is capable of being detected for the first connection.

7. The apparatus of claim **1**, wherein the apparatus is configured such that:

during the at least portion of the first connection set up, the detection of the first time period of the first type of time period is based on the first duration, by being based on whether, for the first duration, no packet is received and processed to keep the first connection active; and

after the first connection set up, the detection of the second time period of the first type of time period is based on the second duration, by being based on whether, for the second duration, no packet is received in the first connection and processed to keep the first connection active.

8. The apparatus of claim **1**, wherein the apparatus is configured to, in response to detecting the first time period of the first type of time period, unilaterally at least partially close the first connection.

9. The apparatus of claim **1**, wherein the apparatus is configured to, in response to detecting the first time period of the first type of time period, at least partially close the first connection, without signaling the node in relation to the detection of the first time period after detecting the first time period.

10. The apparatus of claim **1**, wherein the apparatus is configured such that the second duration is the same as the first duration, despite being capable of being different from the first duration.

11. The apparatus of claim **1**, wherein the apparatus is configured such that the first type of time period is started in response to at least one of a received packet or a sent packet.

12. The apparatus of claim **11**, wherein the apparatus is configured such that the first type of time period is started in response to the received packet.

13. The apparatus of claim **11**, wherein the apparatus is configured such that the first type of time period is started in response to the sent packet.

14. The apparatus of claim **11**, wherein the apparatus is configured such that, after the first connection set up, the

detection of the second time period of the first type of time period is based on the second duration, by being only based on whether, for the second duration after the second time period of the first type of time period is started, no packet is received and processed to keep the first connection active.

15. The apparatus of claim **14**, wherein the apparatus is configured such that, during the second time period of the first type of time period, a particular packet including no application data is sent without causing a timer utilized to detect the second time period to be reset.

16. The apparatus of claim **1**, wherein the apparatus is configured to such that the first information is received for another connection before the first connection.

17. The apparatus of claim **1**, wherein the apparatus is configured to: in response to detecting, based on a third duration, a third time period of a second type of time period, perform at least one action.

18. The apparatus of claim **17**, wherein the apparatus is configured such that the at least one action includes restarting a timer utilized to detect the third time period.

19. The apparatus of claim **17**, wherein the apparatus is configured such that the at least one action includes starting a timer utilized to detect another time period of the second type of time period.

20. The apparatus of claim **17**, wherein the apparatus is configured such that the at least one action does not include connection closure.

21. The apparatus of claim **17**, wherein the apparatus is configured such that the at least one action includes sending a signal.

22. The apparatus of claim **17**, wherein the third duration is determined based on a first algorithm that is different from a second algorithm on which a determination of the second duration is based.

23. The apparatus of claim **17**, wherein the apparatus is configured such that the third time period is detected based on the third duration, by being detected when no acknowledgement packet is received by the apparatus in the first connection and processed as an acknowledgement, during the third duration, for a sent packet sent by the apparatus in the first connection.

24. The apparatus of claim **23**, wherein the apparatus is configured such that the third time period is detected based on the third duration, when an acknowledgement packet is received by the apparatus in the first connection and processed as an acknowledgement, during the third duration, for at least one other sent packet sent by the apparatus in the first connection.

25. The apparatus of claim **17**, wherein the apparatus is configured such that the third time period is detected based on the third duration, by being detected when an expected acknowledgement packet is not received by the apparatus in the first connection, during the third duration, for a sent packet sent by the apparatus in the first connection.

26. The apparatus of claim **17**, wherein the apparatus is configured such that the third time period is detected only in response to an acknowledgement packet not being received, for the third duration, in the first connection for a sent packet sent in the first connection.

27. The apparatus of claim **17**, wherein the apparatus is configured such that the third time period is detected on a sent packet-by-sent packet basis, in response to no acknowledgement packet being received in the first connection and processed as an acknowledgement for a particular sent packet sent in the first connection.

28. The apparatus of claim **17**, wherein the apparatus is configured such that the first packet also includes data, separate from the first metadata, for use in determining the third time period.

29. The apparatus of claim **17**, wherein the apparatus is configured such that the third time period is detected utilizing a timer that is not utilized to detect the first time period nor the second time period.

30. The apparatus of claim **17**, wherein the apparatus is configured such that at least one aspect of the third duration of the third time period is negotiated, via a metadata negotiation, during the first connection set up between the apparatus and the node for the first connection.

31. The apparatus of claim **17**, wherein the apparatus is configured such that the third time period is an acknowledgment timeout period during which an expected acknowledgment for a sent packet is not received.

32. The apparatus of claim **17**, wherein the apparatus is configured such that the third time period is an acknowledgement timeout.

33. The apparatus of claim **17**, wherein the apparatus is configured such that the second duration is determined based on the third duration.

34. The apparatus of claim **17**, wherein the apparatus is configured such that the third duration is determined based on the second duration.

35. The apparatus of claim **17**, wherein the apparatus is configured such that the third time period is detected based on the third duration, by being detected when no acknowledgement packet is detected, by the apparatus during the third duration, as being received and processed as an acknowledgement in the first connection to acknowledge a sent packet of a plurality of sent packets sent by the apparatus, where the third duration starts for each of the plurality of sent packets when at least one of the plurality of sent packets is sent, and where a single timer and a single timeout variable are utilized for detecting the third time period in connection with the plurality of sent packets.

36. The apparatus of claim **17**, wherein the apparatus is configured such that the third duration is determined using an other parameter field identifying second metadata, where the other parameter field is communicated during the first connection set up.

37. The apparatus of claim **17**, wherein the apparatus is configured such that the third duration is determined using an other parameter field identifying second metadata, where the other parameter field is communicated in the first connection after the first connection set up.

38. The apparatus of claim **17**, wherein the apparatus is configured such that the second duration is determined using the first parameter field identifying the first metadata, and an other parameter field identifying second metadata.

39. The apparatus of claim **17**, wherein at least one of:

the at least one action includes at least partial closure of the first connection;

the at least one action includes a closure of the first connection;

the at least one action does not include a closure of the first connection;

the at least one action does not include any part of a closure of the first connection;

the apparatus includes a particular node; the apparatus includes a device, including a network interface, that is a component of the apparatus; the apparatus includes a network interface that is a component of the apparatus; the apparatus includes a web server; a timer is used that includes a hardware timer; a timer is used that includes

a software timer; the by the apparatus includes caused, at least in part, by the apparatus;

the by the apparatus includes caused by the apparatus; the by the apparatus includes caused entirely by the apparatus; the by the apparatus includes performed, at least in part, by the apparatus; the by the apparatus includes performed entirely by the apparatus; the at least partial closure in response to detecting the first time period is the same as the at least partial closure in response to detecting the second time period;

the at least partial closure in response to detecting the first time period is different from the at least partial closure in response to detecting the second time period;

a particular packet including no application data is sent without causing the timer utilized to detect the second time period to be reset, by resetting a first software timer-related component not utilized to detect the second time period, without resetting a second software timer-related component utilized to detect the second time period;

a particular packet including no application data is sent without causing the timer utilized to detect the second time period to be reset, by resetting a first software timer-related component not utilized to detect the second time period, without resetting a second software timer-related component utilized to detect the second time period, where the first software timer-related component and the second software timer-related component utilize a same hardware timer-related component;

a particular packet including no application data is sent without causing the timer utilized to detect the second time period to be reset, by resetting a first software timer-related component not utilized to detect the second time period, without resetting a second software timer-related component utilized to detect the second time period, where the first software timer-related component and the second software timer-related component do not utilize a same hardware timer-related component;

an empty packet is sent without causing the timer utilized to detect the second time period to be reset, by resetting a first software timer-related component not utilized to detect the second time period, without resetting a second software timer-related component utilized to detect the second time period; an empty packet is sent without causing the timer utilized to detect the second time period to be reset, by resetting a first software timer-related component not utilized to detect the second time period, without resetting a second software timer-related component utilized to detect the second time period, where the first software timer-related component and the second software timer-related component utilize a same hardware timer-related component;

an empty packet is sent without causing the timer utilized to detect the second time period to be reset, by resetting a first software timer-related component not utilized to detect the second time period, without resetting a second software timer-related component utilized to detect the second time period, where the first software timer-related component and the second software timer-related component do not utilize a same hardware timer-related component; the first packet is first-in-time;

the apparatus is configured such that, after the first connection set up, the detection of the second time period of the first type of time period is based on the second duration, by being only based on whether, for the second duration after the second time period of the first type of time period is started, no packet is received and processed to keep the first connection active, where at least one packet is received in connection with at least one of the first time period or the second time period, but is not received and processed to keep the first connection active, as a result of at least one of: the at least one packet being un-processable, the at least one packet being discarded, the at least one packet being a duplicate, or the at least one packet not being received in a manner so as to be processed by a software component; the first parameter field is part of a data portion in the first packet; the first parameter field is part of a header of the first packet;

the first packet is informational; the set up of the first connection includes a period of time starting prior to the first packet being sent; the set up of the first connection includes a period of time starting prior to the first packet being sent, when information is identified; the set up of the first connection includes a period of time starting prior to the first packet being sent, when information is received; the set up of the first connection includes a period of time starting prior to the first packet being sent, when the first packet is generated; the set up of the first connection includes a period of time starting prior to the first packet being sent, when received information is used to generate the first packet; the set up of the first connection includes a period of time starting with the first packet being sent; the first packet includes a packet that is used for the set up of the first connection; the first packet includes a packet that is used in association with the set up of the first connection; the first packet includes a packet that is used in advance of a completion of the set up of the first connection; the first packet is for use in the protocol, by being capable of being used by the node in accordance with the protocol;

the at least partial closure includes only a partial deactivation; the at least partial closure includes a full deactivation; the at least partial closure includes a release of a resource;

the at least partial closure includes a partial closure; the at least partial closure includes a closure; the at least partial closure includes a deactivation only for the apparatus; the at least partial closure results in the first connection no longer being fully active; the at least partial closure results in the first connection no longer being active; the protocol includes one or more features of TCP, and one or more features not of TCP; the first packet includes one or more features of a TCP packet, and one or more features not of a TCP packet; the first connection includes one or more features of a TCP connection, and one or more features not of a TCP connection; the first duration for detecting the first type of time period is based on the first information, by the first information specifying the first duration; the first duration for detecting the first type of time period is based on the first information, by information identifying at least one generator for generating the first duration; only the first duration for detecting the first type of time period is based on the first information; the second duration of the second time period is different from the duration of the first time period; the second duration of the second time period is the same as the duration of the first time period; the third duration of the third time period is different from the duration of the first time period;

the third duration of the third time period is the same as the duration of the first time period; the third duration of the third time period is different from the duration of the second time period; the third duration of the third time period is the same as the duration of the second time period; the first packet also includes data for use in determining the first time period; the first information includes a first value representative of the first duration of the first time period, and a second value representative of the second duration of the second time period;

the first information includes a first value representative of the first duration of the first time period, and identification of a generator for generating a second value representative of the second duration of the second time period;

the first information includes identification of a generator for generating a first value representative of the first duration of the first time period, and for generating a second value representative of the second duration of the second time period;

the first information includes identification of a first generator for generating a first value representative of the first duration of the first time period, and identification of a second generator for generating a second value representative of the second duration of the second time period; the first time period is detected in a first use scenario without the second nor third time periods being detected, the second time period is detected in a second use scenario without the first nor third time periods being detected, the third time period is detected in a third use scenario without the first nor second time periods being detected, and neither the first, second, nor third time periods are detected in a fourth use scenario; the first duration of the first time period is determined based on the first information, after identifying the first information;

the first duration of the first time period is determined based on the first information, before setting up the first connection; the first duration of the first time period is determined based on the first information, during setting up the first connection;

the first duration of the first time period is determined based on the first information, after setting up the first connection; the first time period is triggered by one or more non-duration-related criteria that triggers the second time period; the first time period is triggered by the same one or more non-duration-related criteria that triggers the second time period; the first time period is triggered by different one or more non-duration-related criteria than that which triggers the second time period; the first time period is that during which no packet is received in the first connection nor expected to be received; the first time period is that during which no packet is received in the first connection; the third time period is triggered by one or more non-duration-related criteria that triggers the second time period; the third time period is triggered by the same one or more non-duration-related criteria that triggers the second time period;

the third time period is triggered by different one or more non-duration-related criteria than that which triggers the second time period; the third time period is that during which no packet is received in the first connection nor expected to be received;

the third time period is that during which no packet is received in the first connection;

the first metadata is based on the first information; the second time period is a changed version of the first time period; the second time period is a changed instance of the first time period; the first duration is changed to the second duration, where the change occurs while detection of the first time period is attempted; the first duration is changed to the second duration, where the change occurs via a negotiation; the first duration is changed to the second duration, where the change to the second duration includes a change in use of the first duration to a use of the second duration; the first duration is changed to the second duration, where the change to the second duration includes a change in use of the first duration to a use of the second duration, in connection with different time periods; the first duration is changed to the second duration, where the change to the second duration includes a change from an attempt to detect the first time period to an attempt to detect the second time period; the first duration is changed to the second duration, where the change to the second duration includes a change from detecting the first time period to detecting the second time period;

the first time period and the second time period have at least one additional difference, in addition to duration, despite both being of the first type of time period;

the first time period and the second time period do not have at least one additional difference, in addition to duration; the second time period is determined based on the first information; the first duration of the first time period is negotiated between the apparatus and the node for the first connection, during the first connection set up;

the first connection set up includes all communications that precede completion of the first connection set up; the duration of the second time period is determined based on the first information; the duration of the third time period is determined based on the first information; the first and second time periods are of a same duration; the first and second time periods are of a different duration; the first and second time periods are different instances of the same type of time period; the first and second time periods are of the same type of time period, but are applied at different times during the first connection; the first duration of the first time period is determined by being negotiated;

the second duration of the second time period is determined by being negotiated;

the third duration of the third time period is determined by being negotiated;

the first metadata is also for use in determining the second duration of the second time period; the first metadata is not for use in determining the second duration of the second time period; the first metadata is also for use in determining the third duration of the third time period; the first metadata is not for use in determining the third duration of the third time period; the first metadata describes a definition of at least one duration;

the first metadata defines at least one duration; the first metadata includes at least one duration; the first metadata describes a definition of at least one time period;

the first metadata describes other data that defines at least one duration;

the first metadata describes other data that defines at least one time period;

the first metadata describes other criteria-related data that defines at least one time period; the first metadata describes duration data that defines at least one time period;

the first metadata describes duration criteria-related data that defines at least one time period; the at least portion of the first connection set up includes only a subset of setting up the first connection; the protocol includes a TCP-variant protocol;

the at least portion of the first connection set up includes an entirety of setting up the first connection; the at least portion of the first connection set up includes one or more packet exchanges that occur after the first packet is sent;

the at least portion of the first connection set up includes one or more packet exchanges that occur after the first packet is sent prior to completion of the first connection set up;

the first time period is detected based on the first duration, by being detected when packet activity or a lack thereof meets one or more criteria for a span of the first duration; the second time period is detected based on the second duration, by being detected when packet activity or a lack thereof meets one or more criteria for a span of the second duration; the empty packet includes a ping; the empty packet includes an empty acknowledgement packet; the first type of time period includes an idle time period type; the first and second time periods are both of the first type of time period, despite detecting time periods at different times; the first and second time periods are both of the first type of time period, despite detecting time periods for different packets;

the first and second time periods are both of the first type of time period, despite detecting time periods for different types of packets; the first type of time period is of the type that monitors an idle time period; the first type of time period is of the type that monitors an idle time period, and the first and second time periods are both of the first type of time period, despite detecting idle time periods at different times; the first type of time period is of the type that monitors an idle time period, and the first and second time periods are both of the first type of time period, despite detecting idle time periods for different packets; the first type of time period is of the type that monitors an idle time period, and the first and second time periods are both of the first type of time period, despite detecting idle time periods for different types of packets; the first and second time periods of the first type of time period differ only in duration; the first and second time periods of the first type of time period are capable of differing in duration, but may have a same duration; the first and second time periods of the first type of time period are capable of differing only in duration, but may have a same duration;

the first and second time periods of the first type of time period differ in duration and at least one criteria involving packet activity or a lack thereof over a duration span;

the first and second time periods of the first type of time period are capable of differing in duration and further differ in at least one criteria involving packet activity or a lack thereof over a duration span; no packet is communicated after sending the first packet and before receiving the second packet; at least one packet is communicated after sending the first packet and before receiving the second packet; no packet is communicated after receiving the second packet, and before sending the third packet;

at least one packet is communicated after receiving the second packet, and before sending the third packet; the first packet is not the SYN packet, while including at least one characteristics of the SYN packet; the first packet is not the SYN packet, while including at least one characteristics of the SYN packet and at least one characteristics not of the SYN packet; the generating includes creating from non-existence, to generate the first packet; the generating includes modifying something existent, to generate the first packet; the first information is received from a component internal to the apparatus; the first information is received from a location external to the apparatus;

the first information includes other metadata from another connection;

the first packet includes a portion of data sent at any layer; the first packet includes a frame; the first time period is started in response to a received packet and the second time period are started in response to a sent packet;

the first time period is started in response to a sent packet and the second time period are started in response to a received packet; the first time period is started in response to a received packet and the second time period are started in response to a received packet; the first time period is started in response to a sent packet and the second time period are started in response to a sent packet; the first time period and the second time period are started in response to different packets; the first time period and the second time period are started in response to different types of packets;

the first and second time periods are of the first type of time period despite having a difference including at least one of: a different duration, an absolute start time, an absolute end time, a relative start time, a relative end time, a different state of the first connection, a role of at least one of a server or a client; the first and second time periods are of the first type of time period despite having a difference including at least one of: a different duration, an absolute start time, an absolute end time, a relative start time relative to the first packet, a relative end time relative to the first packet, a different state of the first connection, a role of at least one of a server or a client; the first and second time periods are of the first type of time period despite having a difference including: a different duration, an absolute start time, an absolute end time, a relative start time, a relative end time, a different state of the first connection, a role of at least one of a server or a client; the first and second time periods are of the first type of time period by having a same or similar at least one of: definition, implementation specification, or detection causal event or criteria; the first and second time periods are of the first type of time period by having a same or similar: definition, implementation specification, or detection causal event or criteria; the third time period is detected based on the third duration, by being detected when no acknowledgement packet is received by the apparatus in the first connection and processed as an acknowledgement, during the third duration, for any sent packet sent by the apparatus in the first connection; or the third time period is detected based on the third duration, by being detected when no acknowledgement packet is

received by the apparatus in the first connection and processed as an acknowledgement, during the third duration.

40. A method, comprising:

at an apparatus:

receiving first information on which at least a first duration for detecting a first type of time period is based, where the first type of time period does not include a user timeout period of transmission control protocol (TCP);

generating a first packet including a first parameter field identifying first metadata for use in determining a second duration for detecting the first type of time period, where the first packet is not a synchronize (SYN) packet, and is for use in a protocol: that is not TCP, and that is not a TCP extension;

setting up a first connection, by sending, from the apparatus to a node, the first packet to provide the first metadata to the node, for use by the node in determining the second duration for detecting the first type of time period, where the first duration is not negotiated during the first connection set up between the apparatus and the node for the first connection, and the second duration is negotiated during the first connection set up between the apparatus and the node for the first connection, and where the first connection set up further includes, in addition to sending the first packet:

based on sending the first packet, receiving, at the apparatus from the node, a second packet, and

based on receiving the second packet, sending, from the apparatus to the node, a third packet;

based on detecting, as a function of the first duration and by the apparatus during at least a portion of the first connection set up, a first time period of the first type of time period, at least partially closing the first connection; and

based on detecting, as a function of the second duration and by the apparatus during the first connection, a second time period of the first type of time period, at least partially closing the first connection.

41. The method of claim **40**, wherein the apparatus is configured to: based on detecting, as a function of a third duration, a third time period of a second type of time period, perform at least one action.

42. The method of claim **41**, wherein:

the at least one action includes setting or resetting a timer;

the at least one action does not include connection closure; and

the at least one action includes sending a signal.

43. The method of claim **42**, wherein the first packet also includes data, separate from the first metadata, for use in determining the third time period.

44. The method of claim **42**, wherein the third time period is detected utilizing the timer, that is not utilized to detect the first time period nor the second time period.

45. The method of claim **42**, wherein at least one aspect of the third duration of the third time period is negotiated, via a metadata negotiation, during the first connection set up between the apparatus and the node for the first connection.

46. The method of claim **42**, wherein the second duration is determined as a function of the third duration.

47. The method of claim **42**, wherein the third duration is determined as a function of the second duration.

48. The method of claim **42**, wherein the third time period is detected as a function of the third duration, by being detected when no acknowledgement packet is detected, by the apparatus during the third duration, as being received and processed as an acknowledgement in the first connection to acknowledge a sent packet of a plurality of sent packets sent by the apparatus, where the third duration starts for each of the plurality of sent packets when at least one of the plurality of sent packets is sent.

49. The method of claim **48**, wherein:

during the at least portion of the first connection set up, the detection of the first time period of the first type of time period is a function of the first duration, by being a function of whether, for the first duration, no packet is received and processed to keep the first connection active; and

during the first connection, the detection of the second time period of the first type of time period is a function of the second duration, by being a function of whether, for the second duration, no packet is received in the first connection and processed to keep the first connection active.

50. The method of claim **49**, wherein the apparatus is configured to, based on detecting the first time period of the first type of time period, unilaterally at least partially close the first connection.

51. The method of claim **49**, wherein the apparatus is configured to, based on detecting the first time period of the first type of time period, at least partially close the first connection, without signaling the node in relation to the detection of the first time period based on detecting the first time period.

52. The method of claim **49**, wherein the second duration is the same as the first duration, despite being capable of being different from the first duration.

53. The method of claim **49**, wherein, during the second time period of the first type of time period, a particular packet including no application data is sent without causing the timer, that is utilized to detect the second time period, to be reset.

54. The method of claim **49**, wherein the first information is received for another connection other than the first connection.

55. The method of claim **49**, wherein a single timer and a single timeout variable are utilized for detecting the third time period in connection with the plurality of sent packets.

56. An apparatus, comprising:

a non-transitory memory means storing instruction means; and

processor means in communication with the non-transitory memory means, wherein the processor means execute the instruction means to:

receive first information on which at least a first duration for detecting a first type of time period is based, where the first type of time period does not include a user timeout period of transmission control protocol (TCP);

generate a first packet including a first parameter field identifying first metadata for use in determining a second duration for detecting the first type of time period, where the first packet is not a synchronize (SYN) packet, and is for use in a protocol: that is not TCP, and that is not a TCP extension;

set up a first connection, by sending, from the apparatus to a node, the first packet to provide the first metadata to the node, for use by the node in determining the second duration for detecting the first type of time period, where the first duration is not negotiated during the first connection set up between the apparatus and the node for the first connection, and the

second duration is negotiated during the first connection set up between the apparatus and the node for the first connection, and where the first connection set up further includes, in addition to sending the first packet: after sending the first packet, receiving, at the apparatus from the node, a second packet, and after receiving the second packet, sending, from the apparatus to the node, a third packet;

in response to detecting, based on the first duration and by the apparatus during at least a portion of the first connection set up, a first time period of the first type of time period, at least partially close the first connection; and

in response to detecting, based on the second duration and by the apparatus after the first connection set up, a second time period of the first type of time period, at least partially close the first connection.

* * * * *