US006212175B1

(12) **United States Patent**
Harsch

(10) **Patent No.: US 6,212,175 B1**
(45) **Date of Patent: *Apr. 3, 2001**

(54) **METHOD TO SUSTAIN TCP CONNECTION**

(75) Inventor: **Thomas B. Harsch**, Stow, OH (US)

(73) Assignee: **Telxon Corporation**, Holtsville, NY (US)

(*) Notice: This patent issued on a continued prosecution application filed under 37 CFR 1.53(d), and is subject to the twenty year patent term provisions of 35 U.S.C. 154(a)(2).

Subject to any disclaimer, the term of this patent is extended or adjusted under 35 U.S.C. 154(b) by 0 days.

(21) Appl. No.: **08/841,464**

(22) Filed: **Apr. 22, 1997**

(51) **Int. Cl.**[7] **H04Q 7/24**
(52) **U.S. Cl.** **370/338**; 455/422
(58) **Field of Search** 370/338, 349, 370/328, 401; 455/422, 343, 450, 455

(56) **References Cited**

U.S. PATENT DOCUMENTS

Re. 36,056 * 1/1999 Nonami 455/127
4,698,748 * 10/1987 Juzswik et al. 455/343
4,713,808 * 12/1987 Gaskill et al. 370/314
5,430,709 * 7/1995 Galloway 370/241
5,495,480 2/1996 Yoshida .
5,553,239 * 9/1996 Heath et al. 395/187.01
5,682,379 * 10/1997 Mahany et al. 370/315
5,848,064 * 12/1998 Cowan 370/338

* cited by examiner

Primary Examiner—Hassan Kizou
Assistant Examiner—Daniel Previl
(74) *Attorney, Agent, or Firm*—Amin & Turocy, LLP

(57) **ABSTRACT**

The present invention relates to network communication systems for managing client/server connections in a wireless environment. In accordance with the invention, a mobile communication unit (ie., client), deploys keep alive packets at selected times in order to reset a keep idle timer of a server (e.g., host computer). By periodically resetting the keep idle timer a current connection between the mobile communication unit and server can be maintained as long as desired even when the mobile communication unit is in a power suspend mode. When in a power suspend mode, the mobile communication unit can briefly awake long enough to activate its transmitter and send a keep alive packet to the server to maintain the current connection. In this manner, the mobile communication unit can obtain the power savings of being in primarily a power suspend mode, but still prevent the current connection from timing out.

29 Claims, 9 Drawing Sheets

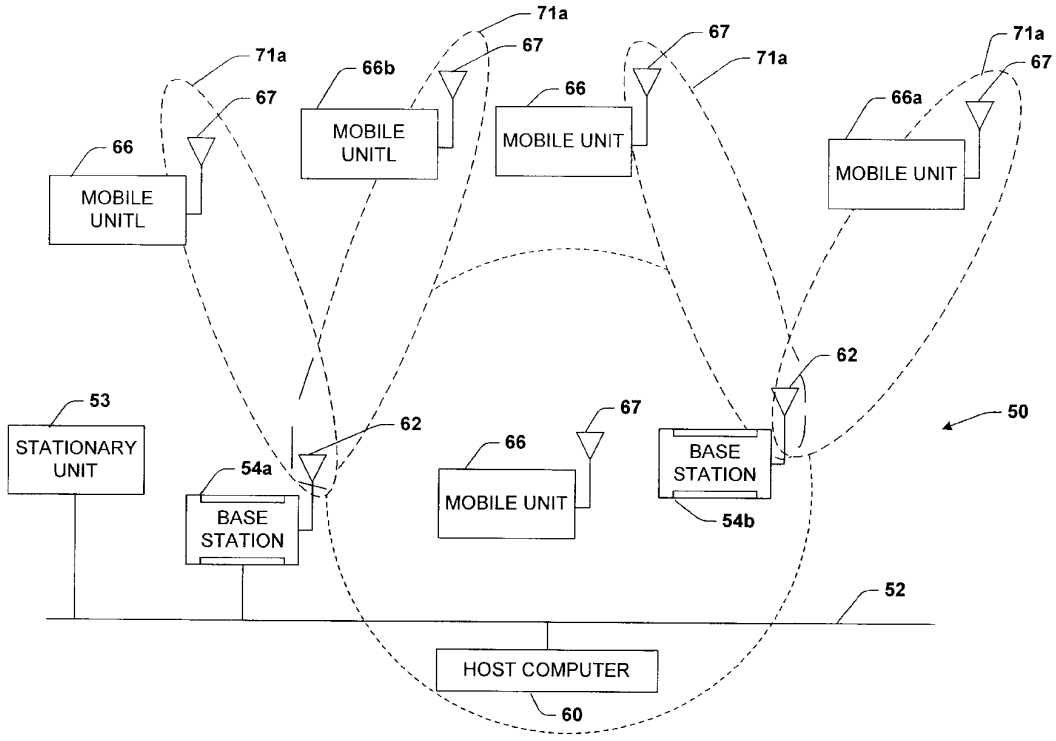

GOOGLE EXHIBIT 1012

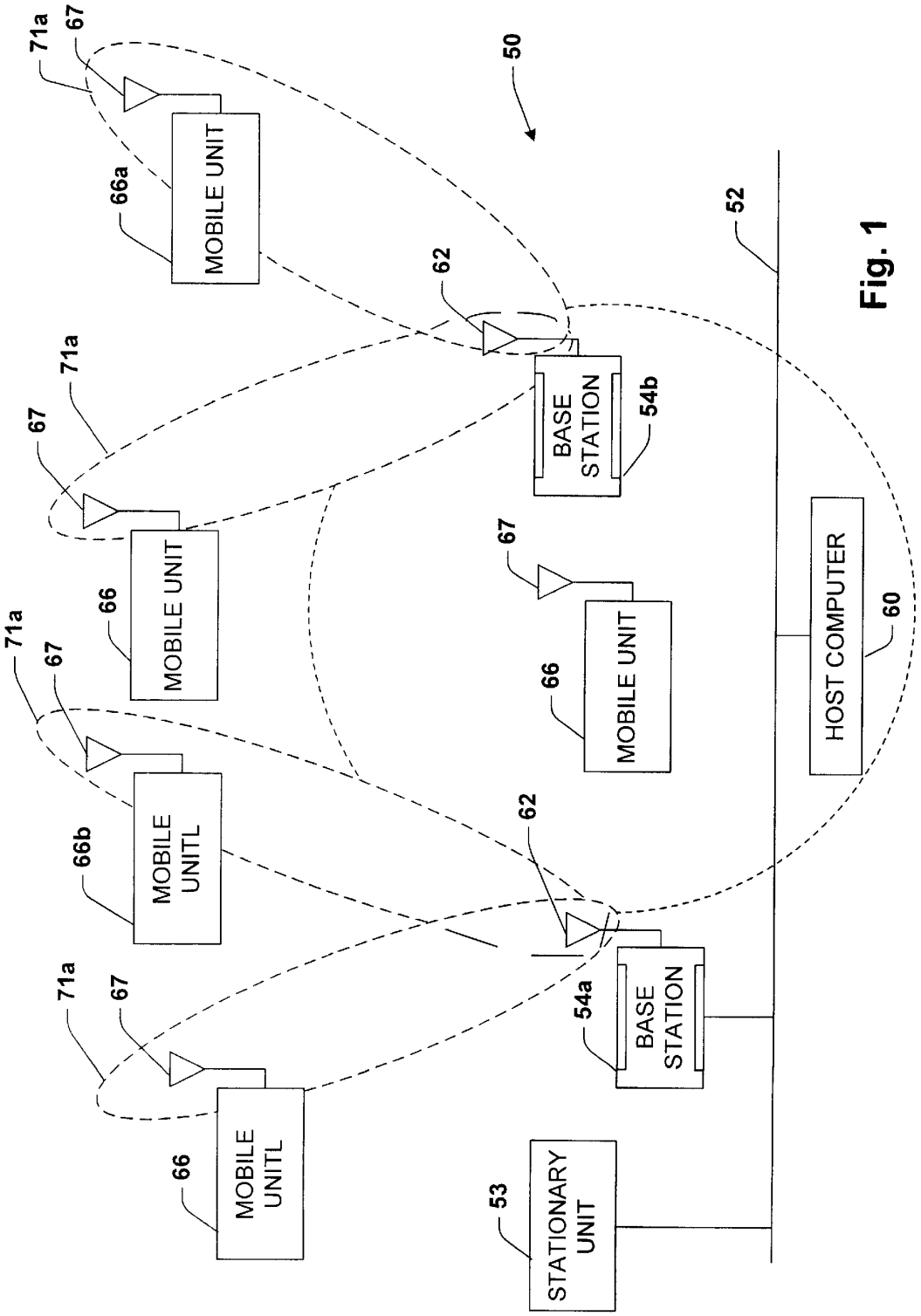
50
52
60
HOST COMPUTER
53
STATIONARY UNIT
54a
BASE STATION
54b
BASE STATION
62
62
66
MOBILE UNITL
66b
MOBILE UNITL
66
MOBILE UNIT
66
MOBILE UNIT
66a
MOBILE UNIT
67
67
67
67
67
71a
71a
71a
71a

Fig. 1

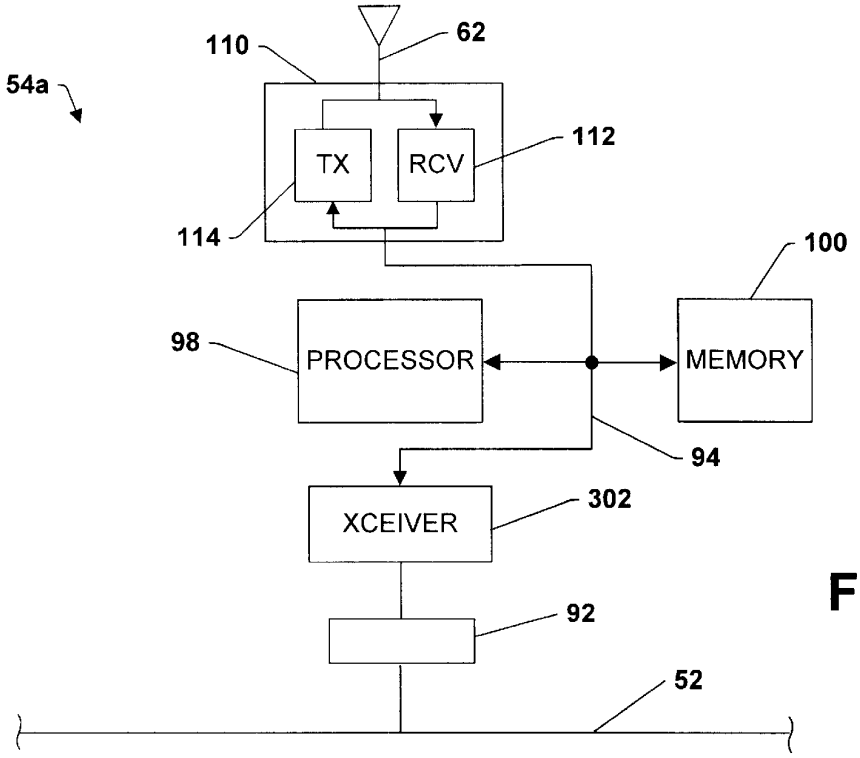
54a
110
62
TX
RCV
112
114
100
98
PROCESSOR
MEMORY
94
XCEIVER
302
92
52

Fig. 2a

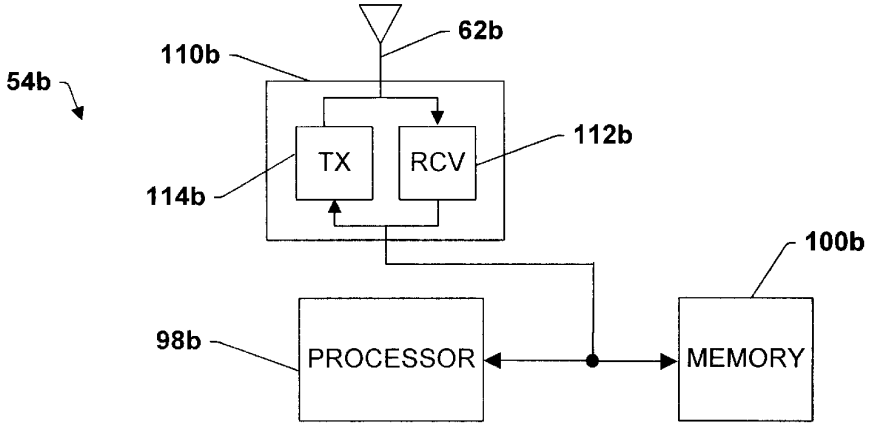
54b
110b
62b
TX
RCV
112b
114b
100b
98b
PROCESSOR
MEMORY

Fig. 2b

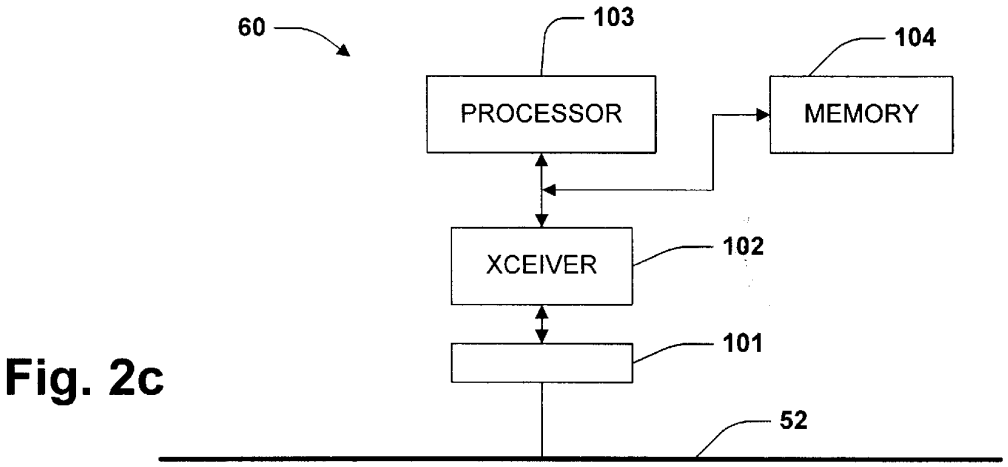
60
103
104
PROCESSOR
MEMORY
XCEIVER
102
101
52

Fig. 2c

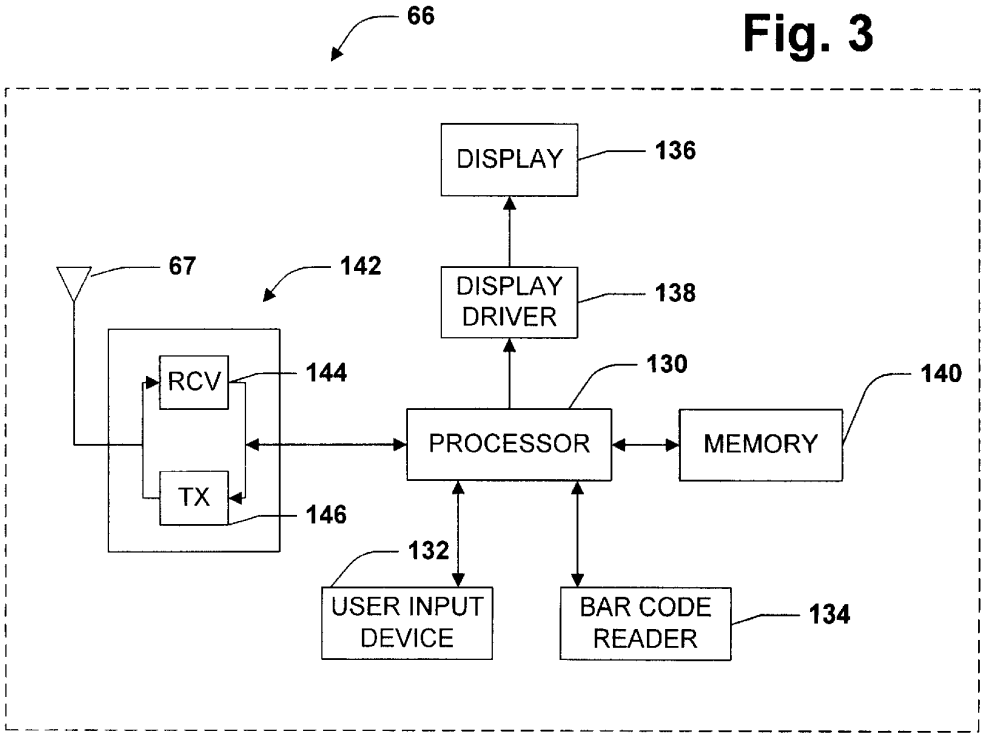
66
DISPLAY
136
67
142
DISPLAY DRIVER
138
RCV
144
130
140
PROCESSOR
MEMORY
TX
146
132
USER INPUT DEVICE
BAR CODE READER
134

Fig. 3

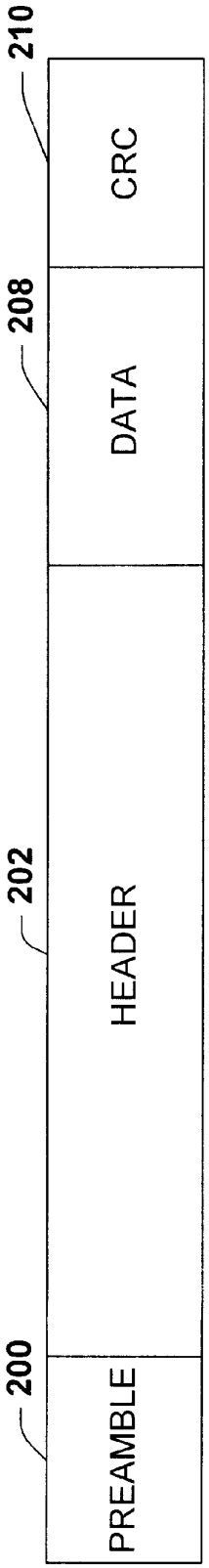

Fig. 4

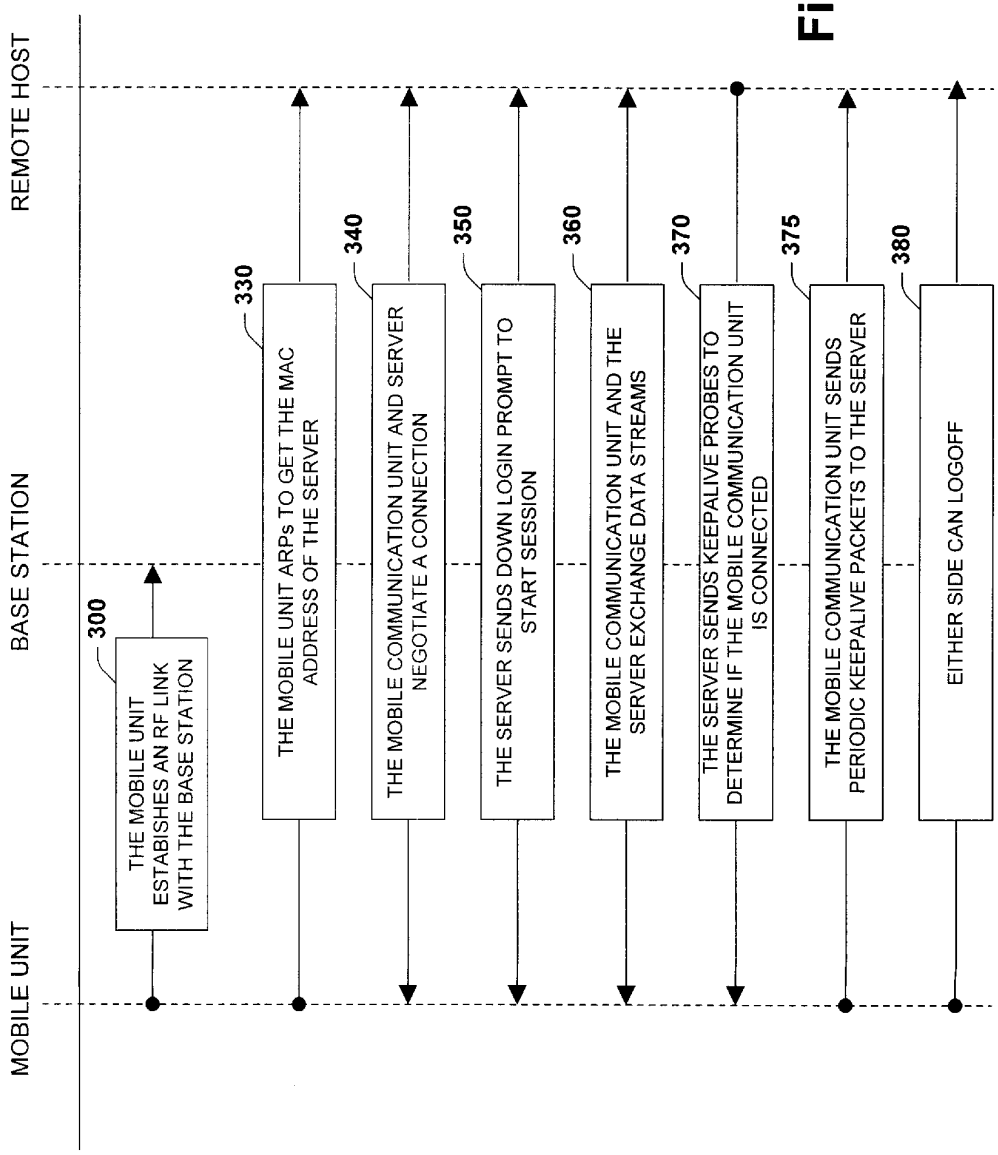
MOBILE UNIT
BASE STATION
REMOTE HOST
300
THE MOBILE UNIT ESTABISHES AN RF LINK WITH THE BASE STATION
330
THE MOBILE UNIT ARPs TO GET THE MAC ADDRESS OF THE SERVER
340
THE MOBILE COMMUNICATION UNIT AND SERVER NEGOTIATE A CONNECTION
350
THE SERVER SENDS DOWN LOGIN PROMPT TO START SESSION
360
THE MOBILE COMMUNICATION UNIT AND THE SERVER EXCHANGE DATA STREAMS
370
THE SERVER SENDS KEEPALIVE PROBES TO DETERMINE IF THE MOBILE COMMUNICATION UNIT IS CONNECTED
375
THE MOBILE COMMUNICATION UNIT SENDS PERIODIC KEEPALIVE PACKETS TO THE SERVER
380
EITHER SIDE CAN LOGOFF

Fig. 5

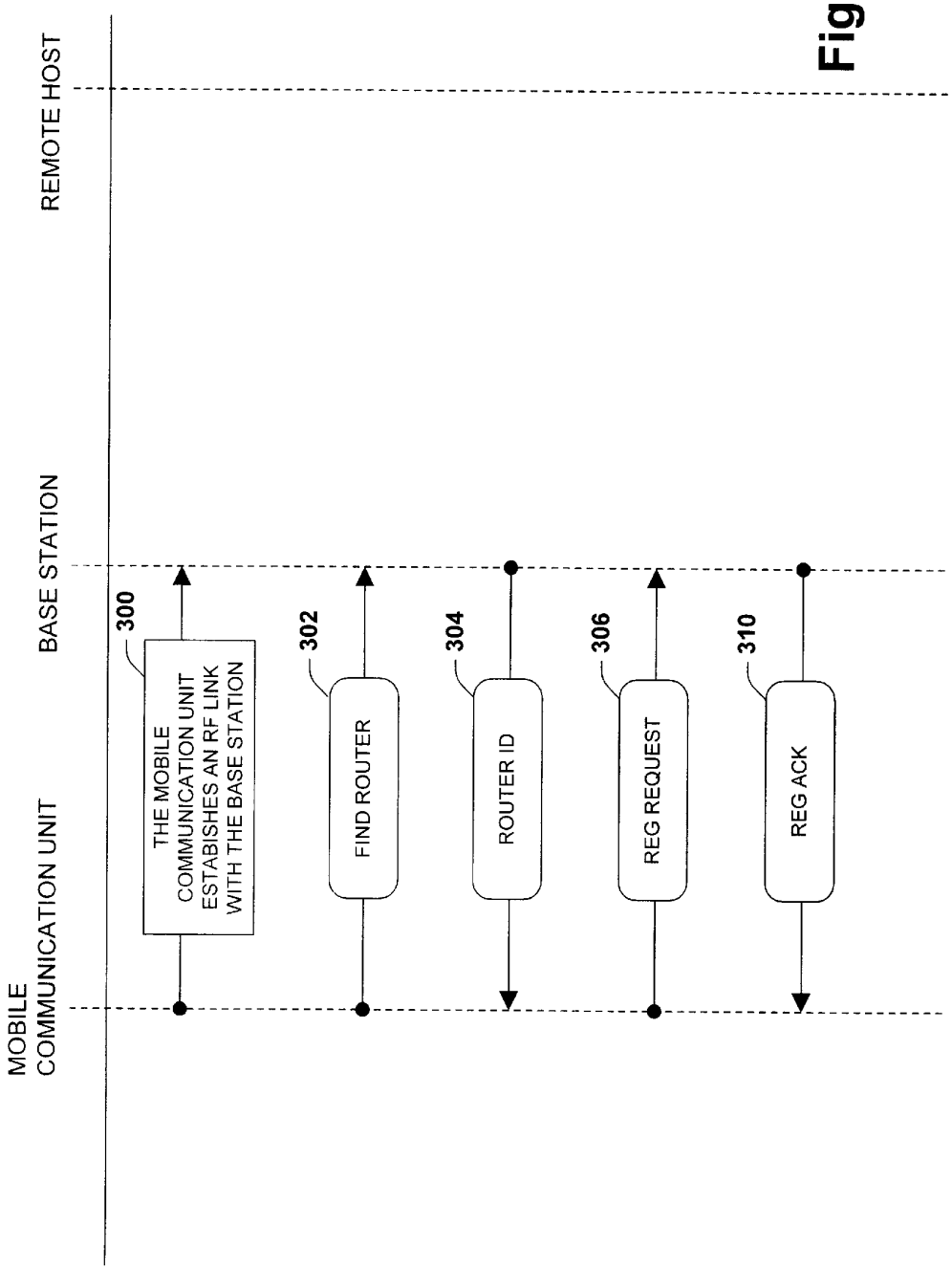
MOBILE COMMUNICATION UNIT
BASE STATION
REMOTE HOST
300
THE MOBILE COMMUNICATION UNIT ESTABISHES AN RF LINK WITH THE BASE STATION
302
FIND ROUTER
304
ROUTER ID
306
REG REQUEST
310
REG ACK

Fig. 6

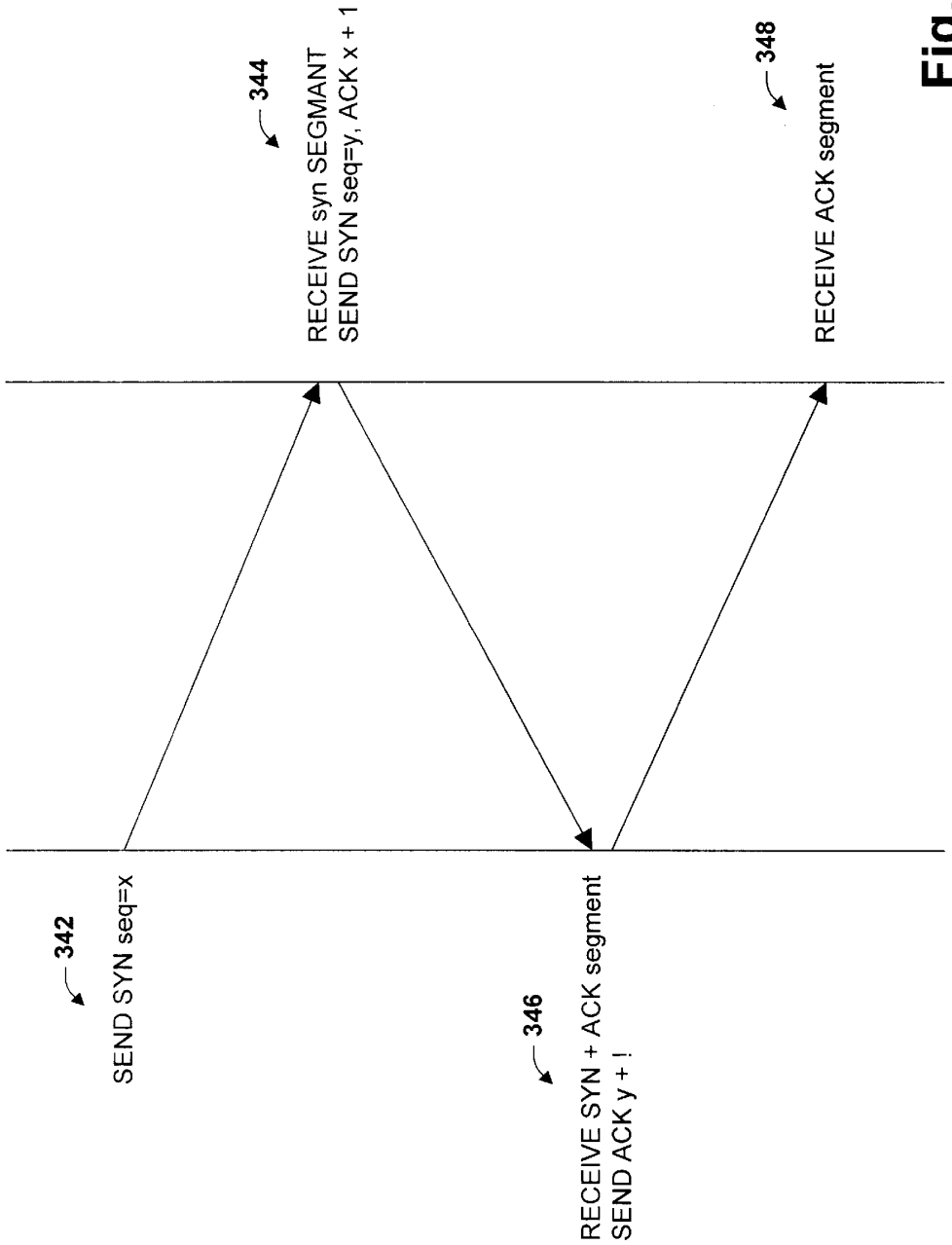
342
SEND SYN seq=x
344
RECEIVE syn SEGMANT
SEND SYN seq=y, ACK x + 1
346
RECEIVE SYN + ACK segment
SEND ACK y + !
348
RECEIVE ACK segment

Fig. 7

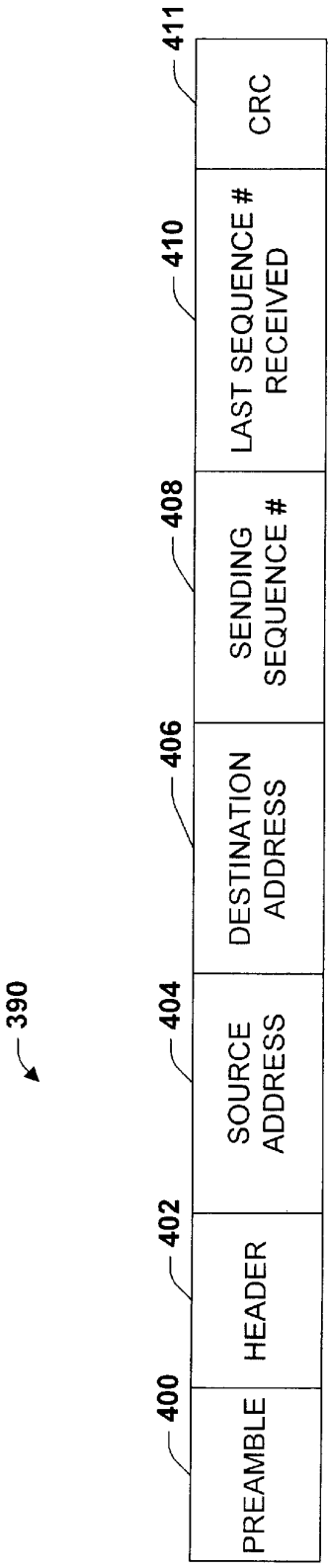
390
400
PREAMBLE
402
HEADER
404
SOURCE ADDRESS
406
DESTINATION ADDRESS
408
SENDING SEQUENCE #
410
LAST SEQUENCE # RECEIVED
411
CRC

Fig. 8

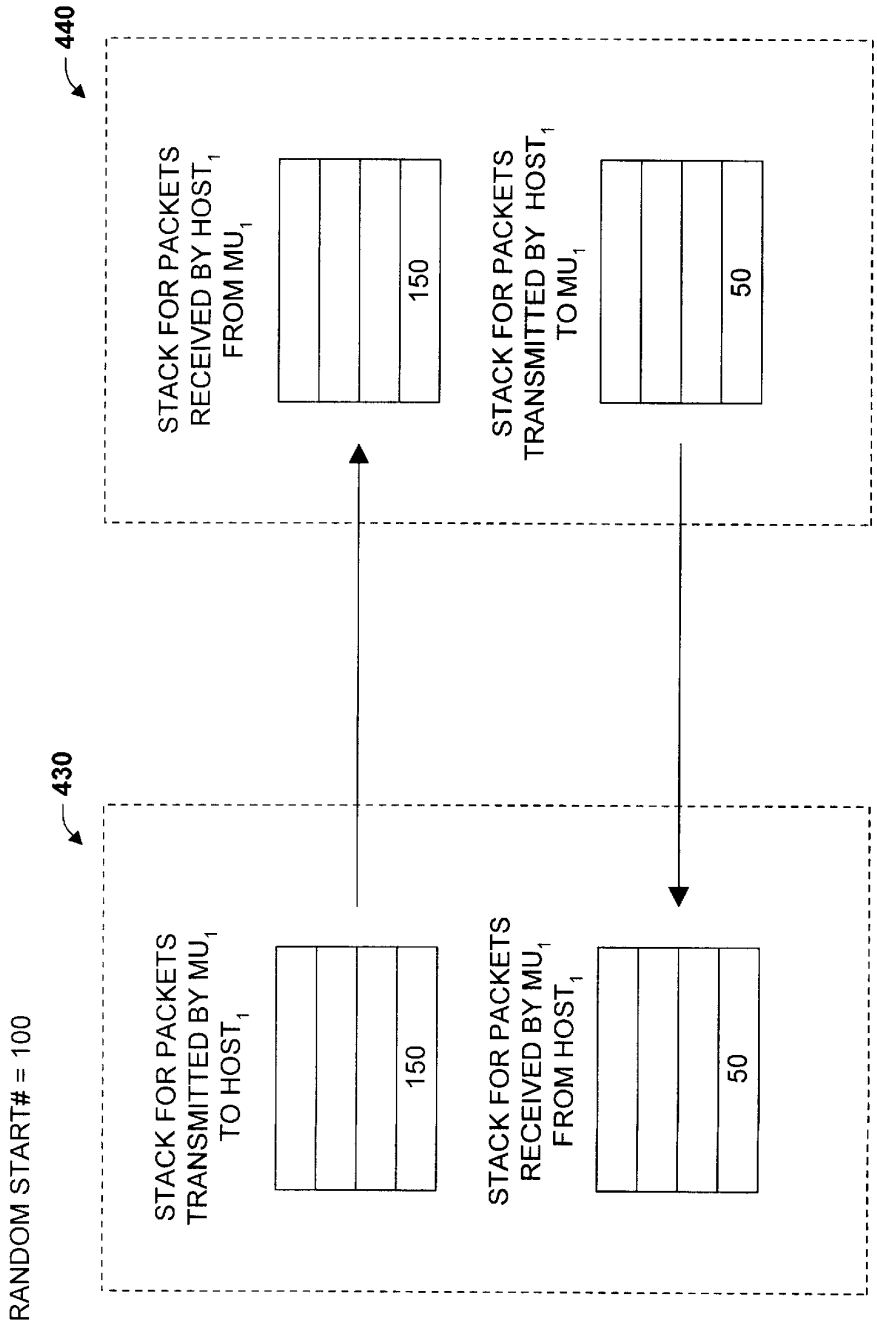
440
STACK FOR PACKETS RECEIVED BY HOST1 FROM MU1
150
STACK FOR PACKETS TRANSMITTED BY HOST1 TO MU1
50
430
RANDOM START# = 100
STACK FOR PACKETS TRANSMITTED BY MU1 TO HOST1
150
STACK FOR PACKETS RECEIVED BY MU1 FROM HOST1
50

Fig. 9

METHOD TO SUSTAIN TCP CONNECTION

TECHNICAL FIELD

The present invention relates generally to network communication systems, such as local area networks (LANs), and more particularly to managing client/server connections in a wireless environment.

BACKGROUND OF THE INVENTION

In recent years, the use of communication systems having wireless mobile communication units which communicate using an optical or radio link with a hardwired network, such as a local area network (LAN), has become quite widespread. Retail stores and warehouses, for example, may use such systems to track inventory and replenish stock. Employees may enter inventory information using a hand held or portable communication unit which can be carried through the store or warehouse. In manufacturing facilities, such systems are useful for tracking parts, completed products and defects. In a medical environment, these systems can reduce the time needed to fill out forms and eliminate inaccuracies by allowing medical personnel to transmit data directly from a mobile communication unit carried by the medical personnel.

A conventional communication system generally includes a number of fixed base stations (i.e., access points) interconnected by a medium to form a network backbone. The network backbone may be wireless in nature or be a hardwired connection formed using a twisted pair cable or shielded coaxial cable for fiber optic lines, for example. Each base station has a service area or cell surrounding the base station within which it has the ability to transmit and to receive relatively error-free data from a mobile communication unit within the area.

In such a network, a mobile communication unit must initially register itself with a base station and then attempt to begin a session with a host computer whereby the host computer allows communication to occur between itself and the particular mobile communication unit. More particularly, when a mobile communication unit is powered up, it "registers" with a base station. However, as the location of this mobile communication unit changes, the mobile communication unit may register with another base station, thereby resulting in a deregistration with the previous base station. Furthermore, deregistration will sometimes occur if there is no communication between the mobile communication unit and its corresponding base station within a predetermined period of time. Thus, in such communication systems, mobile communication units register and deregister frequently as the mobile communication units are moved about.

Each mobile communication unit within the communication system must also begin a connection with a server such as a host computer (or other device which provides application or information based services) once it has registered with a base station. A connection is established to allow the mobile communication unit and server to communicate using a known protocol such as TCP/IP. Following a connection being established, a user of the mobile communication unit is typically prompted to login and begin a session with that particular server. A session is typically only initiated once at start up by each mobile communication unit and is active until such time as the mobile communication unit or server ends the session regardless of the number of registrations and deregistrations which may have taken place with respect to base stations during this period. In order for

the mobile communication unit to enter into the system and begin a session with the server, the mobile communication unit must have a unique network identification code (ID). The ID allows the server or other device on the backbone handling session requests to recognize and distinguish each mobile communication unit.

One widely accepted computer architecture, developed specifically to accommodate the above-mention distributed computing environment is the client-server model. The client-server system in general consists of the server which services the requests of a large number of smaller computers (e.g.,mobile communication units), or clients, that connect to it. The mobile communication units do not typically communicate with each other, but rather only exchange data with the server, which thereby acts as a clearinghouse for mobile communication unit requests and inter mobile communication unit communications.

In order to ensure proper routing of messages between the server and an intended mobile communication unit, the messages are initially broken up into data packets, each of which receive a destination address according to a consistent protocol, and which are reassembled upon receipt by the target computer. The exchange of information between endpoints in a packet network is achieved via a "protocol." A commonly accepted protocol for this purpose is the Internet Protocol (IP), which provides for networking. Used in conjunction with the IP may be a Transmission Control Protocol (TCP) which provides for a reliable stream delivery of messages or a User Datagram Protocol (UDP) which allows for distinguishing messages among multiple destinations with a given host computer.

More specifically, the TCP protocol is a popular connection-oriented transport layer protocol that is used around the world. The TCP protocol offers a full duplex reliable virtual end-to-end connection for transporting information between endpoints by using one or more of the packets, each of which comprises both control information and data.

The mobile communication units (e.g., wireless terminals) that perform client-server communications (e.g., terminal emulation) establish a TCP connection with the server. Then, they use the connection to establish the session.

When a connection is established between a client (i.e., mobile communication unit) and a server (i.e., host computer) the two machines dedicate a portion of their resources to the connection. People who use mobile communication units frequently power them OFF without logging out or move them out of communication range, an action that would inform the server that the connection will not be used and permit it to recover the resources that it has dedicated to the connection. To avoid this problem, servers (i.e., host computers) are often configured to employ a mechanism deemed a "keepalive" probe." The keepalive probe consists of several IP packets, sent in a burst, by the server. The probe determines if the client (mobile communication unit) is still connected to the LAN and operational. The IP packets of keepalive probes differ from ordinary IP packets in that they do not increment a sequence number that synchronize the transfer of bytes in a data stream between the two end points as a convention packet using the TCP protocol would. In this manner, such IP packet is 'invisible' or 'transparent'. Generally, the IP packet sequence number is one less than the number that the receiving node expects to receive. This has two effects: (1) the receiving node will immediately return an acknowledgment packet to the

sender; and (2) the IP packet does not advance the sequence number of the receiving node and therefore it does not change the synchronization state between the two end points.

When a server, that has activated the keepalive feature, does not receive a data packet for a period of time called the "keepidle time," it will send a keepalive probe to the mobile communication unit to assess continued activity. Upon receiving a keepalive message, the mobile communication unit, if active, returns an acknowledgment packet. The server is configured to end its connection with the mobile communication unit when none of the packets in the keepalive probe are acknowledged. Of course the mobile communication unit will not realize the server ended this connection until the mobile communication unit next attempts to communicate with the server.

If the mobile communication unit acknowledges one of the packets in the probe, the server will determine that the mobile communication unit is still active and reset its keepidle timer, thus maintaining the current connection. However, if none of the packets in the keepalive burst are acknowledged, the server will terminate the connection. This typically causes an application program running on the server to end its session with the mobile communication unit.

However, oftentimes workers using mobile communication units (i.e., clients) lay down the mobile communication unit in order to perform another activity or simply place the mobile communication unit in a sleep state in order to conserve battery power. In many of these situations, the worker still desires to maintain the current session so that when he returns to the mobile communication unit or reactivates it, he/she can immediately continue the session he/she was engaged in. Further, in many instances the mobile communication unit may inadvertently or purposefully be taken out of communication range of any access point which establishes a communication link to the server. Unfortunately, as mentioned above, the server will drop the current connection and session if it sends a keepalive probe to the mobile communication unit and it doesn't receive any acknowledgments. When the mobile communication unit is placed in a sleep mode or is out of range, it is unable to receive and acknowledge the keepalive probe, and therefore the current session may be prematurely ended. In many existing systems, the amount of time a server allows before ending a connection may be relatively short as the server was not configured to handle the problems now encountered with mobile communication units.

In light of the above, there is a strong need in the art for a way to maintain a connection and session between the server and the mobile communication unit when the mobile communication unit is in a low power (ie., sleep) mode or out of range. In particular, there is a strong need in the art for a mobile communication unit which is able to prevent the host computer from prematurely ending the current connection and session while the mobile communication unit is in a sleep mode and increase the amount of time the mobile communication unit can be out of communication range with the server prior to the connection and session being dropped.

SUMMARY OF THE INVENTION

The present invention provides for managing client/server connections in a wireless environment. In accordance with the invention, a mobile communication unit (i.e., client), deploys keepalive packets at predetermined intervals in order to reset a keepidle timer of a server (e.g., a host computer). By resetting the keepidle timer, a keepalive probe to be sent by the server is delayed for a desired period of time. In this way, a connection and session between the mobile communication unit and server can be maintained as long as desired even when the mobile communication unit is in a power suspend mode. When in a power suspend mode, the mobile communication unit can briefly awake long enough to activate its transmitter and send a keepalive packet to the server to maintain the current session. In this manner, the mobile communication unit can obtain the power savings of being in primarily a power suspend mode, but still prevent the current session from timing out. Further, during awake periods when no communication is occurring between the mobile communication unit and the server, the mobile communication may periodically transmit keepalive packets so that, in the event the mobile communication unit temporarily roams out of communication range, the keepidle timer in the server will have been recently reset.

For purposes of this invention and the accompanying claims, it is to be understood that the phrase "registered to a communication network", "registered to the backbone" and the like, includes the mobile communication unit being registered to an access point or base station and therefore being able to communicate with devices coupled to the network such as a server. Such registration is understood to remain constant even if the mobile communication device roams from cell to cell. Moreover, it is to be understood that the terms "mobile communication unit", "mobile device", "mobile terminal", "PTC", "wireless terminal" and "client" are used interchangeably throughout the specification and/or claims. Likewise, the terms "host computer", "host" and "server" are employed interchangeably throughout the specification and/or claims. Furthermore, it will be appreciated that the present invention may use a "base station" and/or an "access point", and these terms are used interchangeably throughout the specification and claims to represent a device used as an intermediary between the mobile communication unit and the host computer.

According to one aspect of the present invention, a method for maintaining a connection between a network device and a mobile communication unit is provided, including the steps of: commencing a connection between the network device and the mobile communication unit, the network device ending the connection if no communication is received from the mobile communication unit for a predetermined period of time, and transmitting at least one keepalive packet from the mobile communication unit to the network device, the at least one keepalive packet serving to reset the predetermined period of time so that the network device does not end the connection.

In accordance with another aspect of the present invention, a mobile communication unit for use in a communication system is provided, the communication system including a backbone and a network device coupled to the backbone, the network device having a predetermined period of time during which, if no communication is received from the mobile communication unit, the network device ends an established connection with the mobile communication unit, the mobile communication unit including: a processor operative to control the mobile communication unit; a transmitter coupled to the processor, the transmitter operative to transmit information to the network device upon a connection being established between the mobile communication unit and the network device; and wherein the processor of the mobile communication unit transmits a keepalive packet to the network device, the

keepalive packet serving to reset the predetermined period of time such that the network device does not end the established connection.

According to yet another aspect of the present invention, a communication system is provided, including: a network backbone; a server coupled to the network backbone, the server determining if no communication from a mobile client is received for a predetermined period of time and, in the event no communication is received for the predetermined period of time, the server ending a connection with the mobile client; and wherein the mobile client transmits a keepalive packet to the server, the keepalive packet serving to reset the predetermined period of time so that the server does not end the connection.

To the accomplishment of the foregoing and related ends, the invention, then, comprises the features hereinafter fully described and particularly pointed out in the claims. The following description and the annexed drawings set forth in detail certain illustrative embodiments of the invention. These embodiments are indicative, however, of but a few of the various ways in which the principles of the invention may be employed. Other objects, advantages and novel features of the invention will become apparent from the following detailed description of the invention when considered in conjunction with the drawings.

BRIEF DESCRIPTION OF THE DRAWINGS

In the drawings:

FIG. **1** is a system diagram of a network communication system in accordance with the present invention;

FIG. **2**A is a block diagram of a hard wired base station in accordance with the present invention;

FIG. **2**B is a block diagram of a wireless base station in accordance with the present invention;

FIG. **2**C is a block diagram of a server in accordance with the present invention;

FIG. **3** is a block diagram of a mobile communication unit in accordance with the present invention;

FIG. **4** is a schematic diagram representing an exemplary format for information packets which are communicated between devices in the cellular communication system in accordance with the present invention;

FIG. **5** is a flow diagram representative of a communication session between the mobile communication unit and the server in accordance with the present invention;

FIG. **6** is a flow diagram of the establishment of a RF link in accordance with the present invention;

FIG. **7** is a flow diagram representative of the mobile communication unit and server establishing a TCP connection;

FIG. **8** shows an exemplary format for keepalive packets sent between the server and the mobile communication unit in accordance with the present invention; and

FIG. **9** is a flow diagram of the transfer of stack information for packets transmitted between the mobile communication unit and the server in accordance with the present invention.

DESCRIPTION OF THE INVENTION EMBODIMENTS

The present invention will now be described with reference to the drawings, wherein like reference numerals are used to refer to like elements throughout.

As mentioned above, the present invention provides for managing client/server connections in a wireless environment. In accordance with the invention, a mobile communication unit (ie., client), deploys keepalive packets at predetermined intervals in order to reset a keepidle timer of a server (i.e. a host computer). By resetting the keepidle timer, a keepalive probe to be sent by the server is delayed for a desired period of time. In this way, a connection, and therefore a session, between the mobile communication unit and server can be maintained as long as desired even when the mobile communication unit is in a power suspend mode. When in a power suspend mode, the mobile communication unit can briefly awake long enough to activate its transmitter and send a keepalive packet to the server to maintain the current session. In this manner, the mobile communication unit can obtain the power savings of being in primarily a power suspend mode, but still prevent the current connection from timing out. Further, by periodically sending keepalive packets even while in an awake state, the mobile communication unit can significantly increase the amount of time it can roam outside of communication range since the keepalive packet will serve to periodically reset the keepidle timer even during times when no communication is occurring.

The present invention is applicable to cellular communication systems which include mobile communication units that can roam from cell to cell. Such mobile communication units can be data terminals, telephones, pagers, etc. In the exemplary embodiment described hereinafter, the mobile communication unit is a mobile data terminal used to communicate data such as inventory or the like. However, it is recognized that the invention contemplates other types of mobile devices and is not intended to be limited to systems using mobile data terminals.

Referring now to FIG. **1**, a cellular communication system **50** is shown in accordance with an exemplary embodiment of the present invention. The cellular communication system **50** includes a network backbone **52**. The network backbone **52** may be a hardwired data communication path made of twisted pair cable, shielded coaxial cable or fiber optic cable, for example, or may be wireless or partially wireless in nature. Coupled to the network backbone **52** are a stationary communication unit **53** and several base stations **54**. Only one base station $\mathbf{54}_a$ is shown hardwired to the network backbone **52**, however, it is understood that more than one hardwired base station $\mathbf{54}_a$ may be physically connected to the network backbone **52**. The base stations **54** may be hardwired to the network backbone **52** such as base station $\mathbf{54}_a$ or may wirelessly couple to the backbone **52** such as base station $\mathbf{54}_b$.

Each base station **54** serves as an entrance point through which wireless communications may occur with the network backbone **52**. The wireless base station $\mathbf{54}_b$ may be employed to expand the effective communication range of the cellular communication system **50**. As is conventional, each wireless base station $\mathbf{54}_b$ associates itself, typically by registration, with another base station or a host computer **60** coupled to the network backbone **52**, whether hardwired or wireless, such that a link is formed between itself and other devices situated on the network backbone **52**. Although the present invention is primarily described herein using base stations **54**, it will be appreciated that access points may be used in lieu of base stations to carry out the present invention. Accordingly, the terms "base station" and "access point" are used interchangeably throughout the specification and claims.

Each base station **54** is capable of wirelessly communicating with other devices in the communication system **50** via respective antennas commonly denoted by reference

numeral **62**. The antenna **62** for any particular device may be of any type suitable for use in a network cellular communication system, such as an omni-directional antenna, a yagi-type antenna, etc. A geographic cell (not shown) associated with each base station **54** defines a region of coverage in which successful wireless communications may occur. Depending on the type of antenna **62** selected and output power of the respective base station **54**, the geographic cell may take one of several different forms and sizes. For example, the antenna **62** could be an omni-directional antenna if a generally spherical cell area of coverage is desired. A directed yagi-type antenna could be used as the antenna **62** for a more directed elliptical cell area of coverage.

The cellular communication system **50** also includes one or more mobile communication units **66**. The mobile communication units **66** each include an antenna **67** for wirelessly communicating with other devices. Each mobile communication unit **66** communicates with devices on the network backbone **52** via a selected base station **54** and/or with other mobile communication units. Upon roaming from one cell to another, the mobile communication unit **66** is configured to associate itself with a new base station **54**. A mobile communication unit **66** registers with a particular base station which provides the particular mobile communication unit **66** with wireless access to the network backbone **52**. The manner in which each of the mobile communication units **66** are registered with a particular base station **54** is discussed in more detail below in connection with FIG. **4**.

FIG. **2**A is a block diagram representative of each hardwired base station $\mathbf{54}_a$. Each hardwired base station $\mathbf{54}_a$ is connected to the network backbone **52** via a connector **90** such as a DB-9 or RJ-45 connector. The connector **90** is connected to the network backbone **52** at one end and to a network adapter transceiver **92** included in the base station $\mathbf{54}_a$ at the other end. The network adapter transceiver **92** is configured according to conventional adapter transceiver techniques to allow the base station $\mathbf{54}_a$ to communicate over the network backbone **52**. The network adapter transceiver **92** is also connected to an internal bus **94** included within the base station $\mathbf{54}_a$. The base station $\mathbf{54}_a$ further includes a processor **98** connected to the bus **94** for controlling and carrying out the operations of the base station $\mathbf{54}_a$. The processor **98** may include any of a variety of different microprocessors, such as the Motorola 68360 or Intel 80486 microprocessors. It is understood that any suitable processor capable of carrying out the herein described functions of the base stations $\mathbf{54}_a$ may be used and falls within the scope of this invention.

The base station $\mathbf{54}_a$ also includes a memory **100** connected to the bus **94**. The memory **100** stores program code executed by the processor **98** for controlling the other elements within the base station $\mathbf{54}_a$ to carry out the functions described herein. It will be readily apparent to a person having ordinary skill in the art of microprocessor programming how to program the processor **98** to carry out the operations described herein using conventional programming techniques based on the flowcharts/flow diagrams and descriptions provided herein. Accordingly, additional detail as to the specific program code has been omitted. The memory **100** also serves to buffer packets of information such as those received over the network backbone **52** or those transmitted to or received from the mobile communication units **66** or wireless base stations $\mathbf{54}_b$. Furthermore, the memory **100** may store tables relating to which of the mobile communication units **66** are registered to the network backbone **52** and/or the identification codes of the mobile communication units **66**.

Also connected to the bus **94** is a radio frequency (RF) section **110** included in the base station $\mathbf{54}_a$. The RF section **110** includes the aforementioned antenna **62** for receiving radio signals from and transmitting radio signals to mobile communication units **66** and wireless base stations $\mathbf{54}_b$ (FIG. **2**B) within the cell area of the base station $\mathbf{54}_a$. Information transmitted from a mobile communication unit **66** or a wireless base station $\mathbf{54}_b$ is received via the antenna **62** and is processed by an RF receiver **112** which is connected to the bus **94** and demodulates and decodes the signal and converts the signal to a digital signal having a packet format as discussed below in connection with FIG. **4**. The processor **98** controls an RF transmitter **114** included in the RF section **110**, the RF transmitter also being connected to the bus **94**. The processor **98** causes the RF transmitter **114** to modulate and transmit an RF signal which in turn carries the information packet (FIG. **4**) to the appropriate mobile communication unit **66** or wireless base station $\mathbf{54}_b$. Thereafter, the processor **98** in the base station $\mathbf{54}_a$ stores the packet in the memory **100** until such time as the base station $\mathbf{54}_a$ is able to transmit the information packet onto the network backbone **52** via the network adapter transceiver **92** and connector **90**.

FIG. **2**B is a block diagram representative of each wireless base station $\mathbf{54}_b$ in the system **50**. For the most part, the construction and operation of the components within the wireless base station $\mathbf{54}_b$ are identical to those described with respect to the base stations $\mathbf{54}_a$. Hence, similar components are denoted simply by the addition of a [b]. For example, the processor **98** in the base station $\mathbf{54}_a$ is equivalent to the processor $\mathbf{98}_b$ in the wireless base station $\mathbf{54}_b$. However, the wireless base station $\mathbf{54}_b$ is not connected directly to the network backbone **52** and therefore does not include a network transceiver **92** or connector **90** as in each base station $\mathbf{54}_a$. Rather, the wireless base station $\mathbf{54}_b$ communicates with mobile communication units **66** registered thereto and with the particular base station with which the wireless base station $\mathbf{54}_b$ is associated with via the RF section $\mathbf{110}_b$.

Operation of the two base stations $\mathbf{54}_a$ and $\mathbf{54}_b$ are primarily the same with the exception of the particular procedures described herein. As mentioned above, the wireless base stations $\mathbf{54}_b$ function to extend the relative cell coverage of a given base station $\mathbf{54}_a$, and serve primarily to relay information between the base stations $\mathbf{54}_a$ connected to the network backbone **52** and the mobile communication units **66**.

FIG. **2**C is a block diagram representative of the server (e.g. host computer) **60** of the present invention. Although operations performed by the server **60** are conventionally different than the operations of a base station **54**, the hardware components are similar to those hardware components described with respect to base station $\mathbf{54}_a$ in FIG. **2**A. Hence, the function and interconnection among the hardware components will not be described again in detail. Rather, as shown in FIG. **2**C, similar to base station $\mathbf{54}_a$, the server **60** includes a backbone connector **101**, a transceiver **102**, a processor **103** and a memory **104**. Unlike the base stations **54**, however, the server **60** of this particular embodiment does not include an RF section **110**. Thus, in order for the server **60** to communicate with any mobile communication unit **66**, the server **60** must route all such communi cation over the backbone **52** and through one of the base stations **54**. Similarly, for a mobile communication unit **66** to communicate with the server **60**, the mobile communi-

cation unit **66** must first access the network backbone **52** through one of the existing base stations **54** which will then ensure the communication is properly delivered to the server **60**.

The server **60** serves as a central unit where large operational based and application based software programs are stored and executed in order to provide the necessary functions which the communication system **50** was installed to perform.

FIG. **3** is a block diagram representing the basic structure of each mobile communication unit **66** according to the exemplary embodiment. Each mobile communication unit **66** includes a processor **130** which can be programmed to control and operate the various components within the mobile communication unit **66** in order to carry out the various functions described herein. The processor **130** has coupled thereto a user input device **132** which allows a user to input data to be communicated to the network backbone **52** such as inventory data, patient information, etc. This information may be sent to the server **60** which serves as a central data location, for example, or to a cash register connected to the network backbone **52**, and another example, for providing price information. The input device **132** can include such items as a keypad, touch sensitive display, etc.

The mobile communication unit **66** also may include a bar code scanner **134** coupled to the processor **130** serving as another form of data input. A display **136** is connected to and controlled by the processor **130** via a display driver circuit **138**. The display **136** serves as a means for displaying information stored within the mobile communication unit **66** and/or received over the network backbone **52** via a base station **54**. The display **136** can be a flat panel liquid crystal display with alpha-numeric capabilities, for example, or any other type of display as will be appreciated.

A memory **140** is included in each mobile communication unit **66** for storing program code executed by the processor **130** for carrying out the functions described herein. The actual code for performing such functions could be easily programmed by a person having ordinary skill in the art of microprocessor programming in any of a number of conventional programming languages based on the disclosure herein. Consequently, further detail as to the particular code has been omitted for sake of brevity. The memory **140** also serves as a storage medium for storing information packets received from or intended to be transmitted to a base station **54** as discussed herein. Furthermore, the memory **140** stores an identification code which is used to designate and distinguish the mobile communication unit **66** from the other mobile communication units **66** registered to the network backbone **52** and/or within the system **50**.

Each mobile communication unit **66** also includes its own RF section **142** connected to the processor **130**. The RF section **142** includes an RF receiver which receives the RF transmissions from a base station **54** via an antenna **67** and demodulates the signal to obtain digital information modulated therein. The RF section **144** also includes an RF transmitter **146**. In the event the mobile communication unit **66** is to transmit information to the network backbone **52** in response to an operator input at input device **132**, for example, the processor **130** forms within the memory **140** an information packet including data together with a source address (i.e., the address of the particular mobile communication unit **66** sending the information) and a destination address (e.g., the server **60** or other network device). The information packet is then delivered to the RF transmitter **146** which transmits an RF signal with the information packet modulated thereon via the antenna **67** to the base station **54** with which the mobile communication unit **66** is registered.

Like the antenna **62** of the base station, the antenna **67** of the mobile communication units may be of any type suitable for use in a network cellular communication system, such as an omni-directional antenna, a yagi-type antenna, etc. A geographic cell **71** associated with each mobile communication unit **66** defines a region of coverage in which successful wireless communications may occur. Depending on the type of antenna **67** selected and output power of the respective mobile communication unit **66**, the geographic cell may take one of several different forms and sizes. For example, the antenna **67** could be an omni-directional antenna if a generally spherical cell area $\mathbf{71}_b$ of coverage is desired. A directed yagi-type antenna could be used as the antenna **67** for a more directed elliptical cell area $\mathbf{71}_a$ of coverage.

Referring briefly to FIG. **4**, an exemplary format for frames sent between a mobile communication unit **66** and a base station **54** is shown. Each frame includes a number of fields such as a preamble field **200**, a header field **202** (including a source address field, and a destination address field), a data field **208**, and an error detecting field (CRC) **210**, for example. The preamble field **200** includes synchronizing bits which allow a device receiving the frame an opportunity to "sync" to the frame as is conventional. The header field **202** follows the preamble field **200** and also may include information such as the length, type of the packet and a temporary address or identification code assigned by the server **60** (discussed in greater detail below). For example, the header field **202** may indicate whether the frame is a type which requires a response from the receiving device.

The data field **208** in the frame includes various information intended to be communicated to the receiving device i.e. accruing in a conventional manner. The frame ends with a cyclical redundancy code (CRC) field **210** which serves as an error detecting field according to the conventional techniques such that a receiving device can determine if it has properly received the packet.

Turning now to FIGS. **5** and **6**, the establishment of a basic session such as, for example, a Telnet session in accordance with the present invention is described. The Telnet session is established by a series of well defined communication events. First in step **300**, the mobile communication unit **66** establishes a radio link with a base station **54**. The radio link is established with the base station **54** so that data can be transferred to the backbone **52** of the LAN. The establishment of the radio link includes the steps of registration as shown in FIG. **6**. Thus, as shown in step **302** of FIG. **6**, the mobile communication unit **66** first sends a find router frame to the base station **54**. Thereafter, in step **304**, the base station sends back a router identification (ID) frame. In step **306**, the mobile communication unit **66** sends the base station **54** a registration request frame. The base station **54** in step **310** thereafter acknowledges the registration request frame to the mobile communication unit **66**.

After the mobile communication unit **66** is registered, the base station **54** will buffer broadcast and unicast frames, from the wired LAN, that are directed to the mobile communication unit **66**. When a mobile communication unit **66** sends data to the LAN, in order to communicate with another station on the LAN, it creates a complete Ethernet frame including the source and destination fields, the ether

type and the data field. It sends this frame to the base station **54** where it will be bridged to the LAN.

The base station **54** is selective about which of the frames from the mobile communication unit **66** it will bridge to the LAN. Most of the frames that establish and control registration of the mobile communication unit **66** to the base station **54** are restricted to the radio link.

Returning back to FIG. **5**, after step **300**, the mobile communication unit **66** in step **330** ARPs (employs an address request protocol) to retrieve a link layer address for the server **60** so it can establish a TCP connection with the server **60**. Next in step **340**, the mobile communication unit **66** starts a negotiation process by which the mobile communication unit **66** and the server **60** exchange queries and responses and agree upon a set of parameters which allows them to interpret each others data format and commands. This process is shown in FIG. **7**. More particularly, turning now to FIG. **7**, in order to establish a TCP connection, the mobile communication unit **66** and server **60** exchange packets that initialize the packet sequence numbers that each end-point uses to synchronize the transfer of bytes in the data stream. As shown in step **342**, the mobile communication unit **66** begins the connection sequence by sending an IP synchronization (SYN) packet (SEND SYN seq=x) server **60**. After receiving the SYN segment, the server **60** in step **344** returns an acknowledgment-synchronization packet (ACK-SYN) to the mobile communication unit **66**. The mobile communication unit **66** in step **346** sends back an acknowledgment (ACK) packet to the server **60** which is received in step **348**. In general, TCP connections can be made from either end or simultaneously, but the connection for a Telnet session is typically started by the mobile communication unit **66**. This is important for wireless terminals such as the mobile communication units **66** because they are registered to the network and are reachable for several minutes after starting a connection.

When they have completed negotiation, a connection is established and the server **60** sends down in step **250** (FIG. **5**) a login prompt to the mobile communication unit **66** the user can login and start a session. Following the login, a session is started between the mobile communication unit **66** and the server **60** and as shown in step **360** data can be exchanged. As is conventional, the server **60**, in step **370**, will send keepalive probes to the mobile communication unit **66** if no communication is received from the mobile communication unit before the keepidle timer expires. The keepalive probes are sent periodically for a fixed period of time after the keepidle timer expires. If no acknowledgments or other communication is received in a predetermined period of time thereafter, the server **60** ends the connection. The predetermined period of time consists of the time set in the keepidle timer plus a fixed period of time thereafter which corresponds to the time it takes the server **60** to send keepalive probes and wait for acknowledgments. Of course, the predetermined period of time could be any other period of time that the server **60** sets before the connection is terminated.

In conventional systems, if the mobile communication unit **66** is powered down or out of range and doesn't acknowledge the keepalive probe, the server **60** will drop the connection after the predetermined period of time. Unlike conventional systems, the present invention provides for maintaining the current connection when the mobile communication unit **66** is in a powered down mode and extending the time the mobile communication unit can be out of range. Thus, in step **375** the mobile communication unit **66** periodically transmits a keepalive packet **390** (FIG. **8**) which functions in substantially the same manner as an acknowledgment to the server **60** to a keepalive probe.

The keepalive packets may be transmitted regardless of whether the mobile communication unit **66** is actively communicating with the server **60** at that time or not. In addition, the mobile communication unit may be configured to transmit at least one keepalive packet just prior to its entering a reduced power of sleep mode. This would maximize the amount of time the mobile communication unit **66** could remain in a full sleep mode before the server **60** would begin probing again (using keepalive probes) to determine if the mobile communication unit is still there. Further, the mobile communication unit **66** could also be configured to periodically awaken from its sleep mode to transmit a keepalive packet to the server **60** so as to reset the predetermined period of time allowed before the server **60** ends the connection with this particular mobile communication unit **66**. The purpose of the keepalive packet sent from the mobile communication unit **66** may solely or primarily be to reset the predetermined period of time allowed by the server **60** for a given connection. By saying that the keepalive packet is primarily being used to reset the predetermined period of time, it is meant that the keepalive packet may in some cases also be used to perform other dedicated functions by, for example, setting or resetting flag bits in the keepalive packet even though the keepalive packet would still not include any actual data to be transmitted to the server **60**.

Since the server **60** typically resets its keepidle time for a particular mobile communication unit **66** upon receiving any type of packet from the mobile communication unit, by the mobile communication unit **60** periodically sending its own keepalive packet **390** to the server **60** the keepidle time and the predetermined period of time is also reset. With respect to the present invention and the accompanying claims, the phrase "resetting the predetermined period of time" or the like is meant to include increasing the amount of time available before a connection is ended by the server **60** (or other network device) by any amount, even if this amount of time is not the full amount of time to which it could have been reset. Finally in step **380**, it is shown that either side could log off and end the existing session.

As mentioned above, keepalive probes test the integrity of a TCP connection after it has been established. The TCP protocol does not provide for checking a connection when it is not being used. It is possible for a machine using the TCP/IP protocols to establish a stream connection (i.e., TCP) and then not use the connection for days—yet the connection will remain up. This is efficient for communications, but the machines must allocate valuable resources for the connections and to maintain state information about each other. Keepalive probes are a mechanism to check the connection between the processes without changing their state information. Keepalive probes are generally implemented by the server **60** to check for the existence of a client (i.e., mobile communication unit **66**). In general, any process can activate keepalive probes for a TCP connection.

A keepalive probe consists of several packets. Each packet has a length of 0 or perhaps a single byte. Such packets use a sequence number 1 less than the number that the destination has most recently acknowledged. This causes the destination to acknowledge the packet and also to throw the packet away. It also maintains the synchronization numbers of the data packets. One method to detect such packets is to compare the sequence numbers of the 0–1 byte IP packets in a stream with the number of the last packet sent

when packet flow stopped. The packets in a series, if there is no intervening data packet traffic, will use the same sequence number for every packet.

FIG. **8** shows an exemplary format for keepalive packets **390** sent between the mobile communication unit **66** and host computer **60** in the system **50** is shown. Each packet **390** includes a number of fields such as a preamble field **400**, a header field **402**, a source address field **404**, a destination address field **406**, a sending sequence number (#) field **408**, and a last sequence # received field **410**, for example. The preamble field **400** includes synchronizing bits which allow a device receiving the packet **390** an opportunity to "sync" to the packet **390** as is conventional. The header field **402** follows the preamble field **400** and includes information such as the length, type of the packet and a temporary address or identification code assigned by the server **60** (discussed in greater detail below). For example, the header field **402** may indicate whether the packet is a type which requires a response from the receiving device. The source address field **404** follows the header field **402** and includes an address of the device from which the packet originated.

Following the source address field **404**, the packet **390** includes a destination address field **406** which holds the address of the device to which the packet **390** is ultimately destined.

After the destination address field **406**, the packet **390** includes the sending sequence # field **408** which is used to keep track of the number of bytes being transferred. The sending sequence # field **408** includes the sending sequence number one less than it should be. For example if the sending sequence number is **150**, the sending sequence number sent via the keepalive packet **390** will be **149**. Server **60** that handle TCP/IP are configured such that if the server **60** receives a packet **390** with a sequence # less than what is expected, the server **60** will acknowledge the packet **390** as mentioned above.

Following the sending sequence # field **408** is a last sequence # received field **410** which is compared by the destination device against the last sequence # sent. If the last sequence # received does not correspond to the last sequence number sent between the two devices, then the destination device knows that the other device did not receive the last package sent. Finally, a CRC field **411** is also included as part of the packet **390**.

Turning now to FIG. **9**, a flow diagram of the transfer of stack information for packets **390** transmitted between the mobile communication unit **66** and server **60** is shown. In the keepalive packet headers **402**, the mobile communication unit **66** will choose a random number (e.g., 100) to start with, which is used as a random start number. The mobile communication unit **66** whenever it sends a packet **390** to the server **60** will include a number representative of the random start number plus the number of bytes of data that it is sending to the server **60** inside the keepalive packet **390**. With respect to the last sequence # field there is, preliminarily to the mobile communication unit **66** and server **60** doing real communication, a series of event that occurs where the mobile communication unit **66** tells the server **60** what its starting sequence number is and the server **60** will tell the mobile communication unit **66** what its starting sequence number is.

Generally, the keepalive packet sequence number is one less than the number that the receiving device (e.g., server **60**) expects to receive. This has two effects: (1) the server **60** will immediately return an acknowledgment packet to the sender (e.g., mobile communication unit **60**); and (2) the keepalive packet **390** does not advance the sequence number of the receiving device (e.g., server **60**) and therefore it does not change the synchronization state between the two devices (e.g., mobile communication unit **66** and server **60**). Thus, the keepalive packet **390** is effectively transparent to the server **60**.

As mentioned above, the keepalive packet **390** will include the source address **404**, destination address **406**, sending sequence # field **408** and last sequence # received field **410**. The sending sequence number equals the last number stored in the stack **430** plus the number of bytes that is currently being transmitted. For example, if there is 50 bytes of data being transmitted and this is the first transmission, the stack **430** for packets transmitted by mobile communication unit **66** (MU_1) to the server **60** ($HOST_1$) would be 150 (the random start number (100) plus the number of bytes being transmitted (50)). The $HOST_1$ would update its stack to 150 so as to correspond to the last sequence number plus the number of bytes.

By each device (MU_1 and $HOST_1$) keeping respective TCP/IP stacks for packets transmitted and received and keeping track of the sending sequence # and last number of bytes transmitted, the devices are able to keep track of packets and know if any packets were not received by comparing the number received to what is expected. Using the TCP/IP protocol, the receiving device does not have to acknowledge receipt of a packet to the sender thus resulting in a substantial reduction in the number of packets.

It will be appreciated that server **60** will be running a plurality of stacks, each corresponding to a communication session with a particular mobile communication unit **66**. The mobile communication unit **66** will have a stack for every socket connection it has.

It will be appreciated that the mobile communication unit **66** is also capable of ending the connection and/or session. As a result, the mobile communication unit **66** is programmed such that if it is roaming and thus out of range of an base station **54**, the mobile communication unit **66** will cease sending keepalive packets **390**. This is because if the mobile communication unit **66** is out of range and sends a keepalive probe, the destination device (i.e., server **60**) will not receive and acknowledge receipt of the keepalive probe. If the mobile communication unit **66** sent out a keepalive probe and acknowledgment is not received, the mobile communication unit **66** may end the current session. Thus, if the mobile communication unit **66** begins to roam, it will stop sending keepalive packets **390**.

Accordingly, by the mobile communication unit **66** being able to deploy keepalive packets **390** at predetermined intervals, the keepidle timer of the server **60** can be reset. By resetting the keepidle timer, the keepalive probe to be sent by the server **60** is delayed for a desired period of time. Consequetly the current session between the mobile communication unit **66** and server **60** is maintained as long as desired even when the mobile communication unit **66** is placed in a power suspend mode. When in a power suspend mode, the mobile communication unit **66** can briefly awake long enough to activate its transmitter **146** and send a keepalive packet **390** to the server **60** so as to maintain the current session. In this manner, the mobile communication unit **66** can obtain the power savings of being in primarily a power suspend mode, but still prevent the current session from ending.

The present invention includes all such equivalents and modifications, and is limited only by the scope of the following claims.

What is claimed is:

1. A method for maintaining a connection between a network device and a mobile communication unit, comprising the steps of:

commencing a connection between the network device and the mobile communication unit, the network device ending the connection if no communication is received from the mobile communication unit for a predetermined period of time, and

transmitting at least one unsolicited keepalive packet from the mobile communication unit at predetermined intervals to the network device, the at least one keepalive packet serving to reset the predetermined period of time so that the network device does not end the connection.

2. The method of claim 1, wherein the at least one keepalive packet transmitted from the mobile communication unit serves primarily to reset the predetermined period of time so that the network device does not end the connection.

3. The method of claim 2, wherein the mobile communication unit periodically awakens from a low power state in order to transmit the at least one keepalive packet to the network device.

4. The method of claim 2 wherein the mobile communication unit periodically transmits the at least one keepalive packet to the network device in time intervals which are less than the predetermined time set by the network device.

5. The method of claim 4 wherein the mobile communication unit and the network device communicate using a TCP protocol.

6. The method of claim 1, wherein the at least one keepalive packet transmitted from the mobile communication unit serves solely to reset the predetermined period of time so that the network device does not end the connection.

7. The method of claim 6, wherein the mobile communication unit periodically awakens from a low power state in order to transmit the at least one keepalive packet to the network device.

8. The method of claim 6, wherein the mobile communication unit transmits the at least one keepalive packet substantially immediately prior to entering into a low power state.

9. The method of claim 6 wherein the mobile communication unit and the network device communicate using a TCP protocol.

10. The method of claim 6 wherein the mobile communication unit periodically transmits the at least one keepalive packet to the network device in time intervals which are less than the predetermined time set by the network device.

11. The method of claim 10 wherein the network device is a host computer.

12. A mobile communication unit for use in a communication system, the communication system including a backbone and a network device coupled to the backbone, the network device having a predetermined period of time during which, if no communication is received from the mobile communication unit, the network device ends an established connection with the mobile communication unit, the mobile communication unit comprising:

a processor operative to control the mobile communication unit;

a transmitter coupled to the processor, the transmitter operative to transmit information to the network device upon a connection being established between the mobile communication unit and the network device; and

wherein the processor of the mobile communication unit transmits an unsolicited keepalive packet to the network device at predetermined intervals, the keepalive packet serving to reset the predetermined period of time such that the network device does not end the established connection.

13. The mobile communication unit of claim 12, wherein the keepalive packet transmitted from the mobile communication unit to the network device is effectively transparent to the network device.

14. The mobile communication unit of claim 13, wherein the mobile communication unit periodically transmits the keepalive packet to the network device in time intervals which are less than the predetermined time set by the network device.

15. The mobile communication unit of claim 14, wherein the mobile communication unit periodically awakens from a low power state in order to transmit the keepalive packet to the network device.

16. The mobile communication unit of claim 12, wherein the keepalive packet transmitted from the mobile communication unit to the network device serves solely to reset the predetermined period of time so that the network device does not end the connection.

17. The mobile communication unit of claim 16, wherein the mobile communication unit periodically transmits the keepalive packet to the network device in time intervals which are less than the predetermined time set by the network device.

18. The mobile communication unit of claim 17, wherein in the event the mobile communication unit roams out of communicating range with the network device, the mobile communication unit suspends periodically transmitting the keepalive packet.

19. The mobile communication unit of claim 18, wherein the mobile communication unit and the network device communicate using a TCP protocol.

20. The mobile communication unit of claim 16, wherein the mobile communication unit periodically awakens from a low power state in order to transmit the keepalive packet to the network device.

21. The mobile communication unit of claim 16, wherein the mobile communication unit transmits the keepalive packet substantially immediately prior to entering into a low power state.

22. A communication system comprising:

a network backbone;

a server coupled to the network backbone, the server determining if no communication from a mobile client is received for a predetermined period of time and, in the event no communication is received for the predetermined period of time, the server ending a connection with the mobile client; and

wherein the mobile client transmits an unsolicited keepalive packet a predetermined intervals to the server device, the keepalive packet serving to reset the predetermined period of time so that the server does not end the connection.

23. The communication system of claim 22, wherein the keepalive packet transmitted from the mobile client to the server serves primarily to reset the predetermined period of time so that the server does not end the connection.

24. The communication system of claim 23, wherein the mobile client periodically transmits the keepalive packet to the server in time intervals which are less than the predetermined time set by the server.

25. The communication system of claim 24, wherein the mobile client periodically awakens from a low power state in order to transmit the keepalive packet to the server.

26. The communication system of claim **22**, wherein the keepalive packet transmitted from the mobile client to the server serves solely to reset the predetermined period of time so that the server does not end the connection.

27. The communication system **26**, wherein the mobile client periodically transmits the keepalive packet to the server in time intervals which are less than the predetermined time set by the server.

28. The communication system claim **27**, wherein in the event the mobile client roams out of communicating range with the server, the mobile client suspends periodically transmitting the keepalive packet.

29. The communication system **28**, wherein the mobile client and the server communicate using a TCP protocol.

* * * * *

UNITED STATES PATENT AND TRADEMARK OFFICE

CERTIFICATE OF CORRECTION

PATENT NO. : 6,212,175 B1
DATED : April 3, 2001
INVENTOR(S) : Thomas Harsch

It is certified that error appears in the above-identified patent and that said Letters Patent is hereby corrected as shown below:

Claim 22,
Line 53, please replace "a predetermined" with -- at predetermined --.

Signed and Sealed this

Sixteenth Day of October, 2001

Attest:

Nicholas P. Godici

NICHOLAS P. GODICI
Acting Director of the United States Patent and Trademark Office

Attesting Officer