UNITED STATES PATENT AND TRADEMARK OFFICE

UNITED STATES DEPARTMENT OF COMMERCE
United States Patent and Trademark Office
Address: COMMISSIONER FOR PATENTS
P.O. Box 1450
Alexandria, Virginia 22313-1450
www.uspto.gov

APPLICATION NO.	FILING DATE	FIRST NAMED INVENTOR	ATTORNEY DOCKET NO.	CONFIRMATION NO.
12/714,063	02/26/2010	Robert Paul Morris	PMOR0110	5929

92045 7590 08/14/2014
The Caldwell Firm, LLC
PO Box 59655
Dept. SVIPGP
Dallas, TX 75229

EXAMINER
COULTER, KENNETH R

ART UNIT	PAPER NUMBER
2445	

NOTIFICATION DATE	DELIVERY MODE
08/14/2014	ELECTRONIC

Please find below and/or attached an Office communication concerning this application or proceeding.

The time period for reply, if any, is set in the attached communication.

Notice of the Office communication was sent electronically on above-indicated "Notification Date" to the following e-mail address(es):

pcaldwell@thecaldwellfirm.com
lcaldwell@thecaldwellfirm.com
andrew.gordon@stragent.com

PTOL-90A (Rev. 04/07)

Examiner-Initiated Interview Summary	Application No.	Applicant(s)	
	12/714,063	MORRIS, ROBERT PAUL	
	Examiner	Art Unit	
	Kenneth Coulter	2445	

All participants (applicant, applicant's representative, PTO personnel):

(1) *Kenneth Coulter*. (3)_____.

(2) *Patrick Caldwell (Reg. No. 44,580)*. (4)_____.

Date of Interview: *07 August 2014*.

Type: ☒ Telephonic ☐ Video Conference
☐ Personal [copy given to: ☐ applicant ☐ applicant's representative]

Exhibit shown or demonstration conducted: ☐ Yes ☒ No.
If Yes, brief description: _____.

Issues Discussed ☐101 ☐112 ☐102 ☐103 ☒Others
(For each of the checked box(es) above, please describe below the issue and detailed description of the discussion)

Claim(s) discussed: *N/A*.

Identification of prior art discussed: *N/A*.

Substance of Interview
(For each issue discussed, provide a detailed description and indicate if agreement was reached. Some topics may include: identification or clarification of a reference or a portion thereof, claim interpretation, proposed amendments, arguments of any applied references etc...)

Examiner contacted Applicant's representative, Patrick Caldwell, regarding the status of the present Application since no response to the Final rejection mailed 9/27/2013 has been received. Applicant's representative indicated that no response has been filed.

Applicant recordation instructions: It is not necessary for applicant to provide a separate record of the substance of interview.

Examiner recordation instructions: Examiners must summarize the substance of any interview of record. A complete and proper recordation of the substance of an interview should include the items listed in MPEP 713.04 for complete and proper recordation including the identification of the general thrust of each argument or issue discussed, a general indication of any other pertinent matters discussed regarding patentability and the general results or outcome of the interview, to include an indication as to whether or not agreement was reached on the issues raised.

☐ Attachment

/Kenneth Coulter/
Primary Examiner, Art Unit 2445

Notice of Abandonment	Application No.	Applicant(s)
	12/714,063	MORRIS, ROBERT PAUL
	Examiner	**Art Unit**
	Kenneth Coulter	2445

-- The MAILING DATE of this communication appears on the cover sheet with the correspondence address--

This application is abandoned in view of:

1. ☒ Applicant's failure to timely file a proper reply to the Office letter mailed on *27 September 2013*.
   (a) ☐ A reply was received on _____ (with a Certificate of Mailing or Transmission dated _____), which is after the expiration of the period for reply (including a total extension of time of _____ month(s)) which expired on _____.
   (b) ☐ A proposed reply was received on _____, but it does not constitute a proper reply under 37 CFR 1.113 to the final rejection.
   (A proper reply under 37 CFR 1.113 to a final rejection consists only of: (1) a timely filed amendment which places the application in condition for allowance; (2) a timely filed Notice of Appeal (with appeal fee); or (3) a timely filed Request for Continued Examination (RCE) in compliance with 37 CFR 1.114).
   (c) ☐ A reply was received on _____ but it does not constitute a proper reply, or a bona fide attempt at a proper reply, to the non-final rejection. See 37 CFR 1.85(a) and 1.111. (See explanation in box 7 below).
   (d) ☒ No reply has been received.

2. ☐ Applicant's failure to timely pay the required issue fee and publication fee, if applicable, within the statutory period of three months from the mailing date of the Notice of Allowance (PTOL-85).
   (a) ☐ The issue fee and publication fee, if applicable, was received on _____ (with a Certificate of Mailing or Transmission dated _____), which is after the expiration of the statutory period for payment of the issue fee (and publication fee) set in the Notice of Allowance (PTOL-85).
   (b) ☐ The submitted fee of $_____ is insufficient. A balance of $_____ is due.
   The issue fee required by 37 CFR 1.18 is $_____. The publication fee, if required by 37 CFR 1.18(d), is $_____.
   (c) ☐ The issue fee and publication fee, if applicable, has not been received.

3. ☐ Applicant's failure to timely file corrected drawings as required by, and within the three-month period set in, the Notice of Allowability (PTO-37).
   (a) ☐ Proposed corrected drawings were received on _____ (with a Certificate of Mailing or Transmission dated _____), which is after the expiration of the period for reply.
   (b) ☐ No corrected drawings have been received.

4. ☐ The letter of express abandonment which is signed by the attorney or agent of record or other party authorized under 37 CFR 1.33(b). See 37 CFR 1.138(b).

5. ☐ The letter of express abandonment which is signed by an attorney or agent (acting in a representative capacity under 37 CFR 1.34) upon the filing of a continuing application.

6. ☐ The decision by the Board of Patent Appeals and Interference rendered on _____ and because the period for seeking court review of the decision has expired and there are no allowed claims.

7. ☒ The reason(s) below:

see attached interview summary

/Kenneth Coulter/
Primary Examiner, Art Unit 2445

Petitions to revive under 37 CFR 1.137, or requests to withdraw the holding of abandonment under 37 CFR 1.181, should be promptly filed to minimize any negative effects on patent term.

Examiner-Initiated Interview Summary	Application No.	Applicant(s)	
	12/714,063	MORRIS, ROBERT PAUL	
	Examiner	Art Unit	
	Kenneth Coulter	2445	

All participants (applicant, applicant's representative, PTO personnel):

(1) *Kenneth Coulter*. (3)_____.

(2) *Patrick Caldwell (Reg. No. 44,580)*. (4)_____.

Date of Interview: *07 August 2014*.

Type: ☒ Telephonic ☐ Video Conference
☐ Personal [copy given to: ☐ applicant ☐ applicant's representative]

Exhibit shown or demonstration conducted: ☐ Yes ☒ No.
If Yes, brief description: _____.

Issues Discussed ☐101 ☐112 ☐102 ☐103 ☒Others
(For each of the checked box(es) above, please describe below the issue and detailed description of the discussion)

Claim(s) discussed: *N/A*.

Identification of prior art discussed: *N/A*.

Substance of Interview
(For each issue discussed, provide a detailed description and indicate if agreement was reached. Some topics may include: identification or clarification of a reference or a portion thereof, claim interpretation, proposed amendments, arguments of any applied references etc...)

Examiner contacted Applicant's representative, Patrick Caldwell, regarding the status of the present Application since no response to the Final rejection mailed 9/27/2013 has been received. Applicant's representative indicated that no response has been filed.

Applicant recordation instructions: It is not necessary for applicant to provide a separate record of the substance of interview.

Examiner recordation instructions: Examiners must summarize the substance of any interview of record. A complete and proper recordation of the substance of an interview should include the items listed in MPEP 713.04 for complete and proper recordation including the identification of the general thrust of each argument or issue discussed, a general indication of any other pertinent matters discussed regarding patentability and the general results or outcome of the interview, to include an indication as to whether or not agreement was reached on the issues raised.

☐ Attachment

/Kenneth Coulter/
Primary Examiner, Art Unit 2445

PATENT ASSIGNMENT COVER SHEET

Electronic Version v1.1
Stylesheet Version v1.2

EPAS ID: PAT2601318

SUBMISSION TYPE:	NEW ASSIGNMENT
NATURE OF CONVEYANCE:	ASSIGNMENT

CONVEYING PARTY DATA

Name	Execution Date
ROBERT PAUL MORRIS	09/05/2013

RECEIVING PARTY DATA

Name:	SITTING MAN, LLC
Street Address:	712 LATTA ST
City:	RALEIGH
State/Country:	NORTH CAROLINA
Postal Code:	27607

PROPERTY NUMBERS Total: 48

Property Type	Number
Application Number:	12688996
Application Number:	13023883
Patent Number:	8422858
Application Number:	13790082
Application Number:	12696854
Application Number:	12689168
Application Number:	12868767
Application Number:	13045556
Application Number:	12689177
Application Number:	12955993
Patent Number:	8346853
Application Number:	13685739
Application Number:	12714063
Application Number:	12705638
Patent Number:	8219606

CH $1920.00 12688996

Application Number:	13477402
Application Number:	12857836
Application Number:	12857847
Application Number:	12758125
Application Number:	12956008
Application Number:	12788373
Application Number:	13023916
Application Number:	12857857
Application Number:	12758828
Patent Number:	8233482
Application Number:	13531544
Application Number:	12819214
Patent Number:	8331372
Application Number:	13663513
Application Number:	12830385
Application Number:	12789538
Application Number:	12789550
Application Number:	12789568
Application Number:	12819215
Patent Number:	8447819
Application Number:	13867040
Application Number:	12833016
Application Number:	12830389
Application Number:	12830388
Application Number:	12857851
Application Number:	12830392
Application Number:	13025939
Application Number:	13025944
Application Number:	13024444
Application Number:	13023932
Application Number:	13023952
Application Number:	13024466
Application Number:	12788381

CORRESPONDENCE DATA

Fax Number:
Email: pcalwell@thecaldwellfirm.com
Correspondence will be sent via US Mail when the email attempt is unsuccessful.
Correspondent Name: PATRICK E. CALDWELL, ESQ.
Address Line 1: PO BOX 59655
Address Line 4: DALLAS, TEXAS 75229

NAME OF SUBMITTER:	PATRICK E. CALDWELL, ESQ.
Signature:	/Patrick E. Caldwell/
Date:	11/03/2013
	This document serves as an Oath/Declaration (37 CFR 1.63).

Total Attachments: 9
source=Morris-SittingMan_Assignment_vF_9-5-13#page1.tif
source=Morris-SittingMan_Assignment_vF_9-5-13#page2.tif
source=Morris-SittingMan_Assignment_vF_9-5-13#page3.tif
source=Morris-SittingMan_Assignment_vF_9-5-13#page4.tif
source=Morris-SittingMan_Assignment_vF_9-5-13#page5.tif
source=Morris-SittingMan_Assignment_vF_9-5-13#page6.tif
source=Morris-SittingMan_Assignment_vF_9-5-13#page7.tif
source=Morris-SittingMan_Assignment_vF_9-5-13#page8.tif
source=Morris-SittingMan_Assignment_vF_9-5-13#page9.tif

ASSIGNMENT OF PATENT RIGHTS

For valuable consideration, the receipt and sufficiency of which is hereby acknowledged, on this 5th day of September, 2013, Robert Paul Morris of Wake County, Raleigh, North Carolina, a person, ("**Assignor**"), hereby sells, assigns, and transfers to Sitting Man, LLC, a Delaware limited liability company ("**Assignee**"), the full extent of all right, title, and interest in and to any and all of the following (collectively, the "**Rights**"):

1. The patents, provisional patent applications and patent applications listed in the table below (individually and collectively referred to herein as the "**Patents**");
2. All inventions claimed or described in the Patents (collectively, the "**Inventions**");
3. All rights with respect to the Inventions, including all U.S. patents or other governmental grants or issuances that may be granted with respect to the Inventions or from any direct or indirect divisionals, continuations, continuations-in-part, or other patent applications claiming priority rights from the Patents ("**Potential Patents**");
4. All reissues, reexaminations, extensions, registrations, or any and all priority patent application(s) of the Patents or Potential Patents;
5. All non-United States patents, patent applications, and counterparts relating to any or all of the Inventions, the Patents, or Potential Patents, including, without limitation, certificates of invention, utility models, industrial design protection, design patent protection, and other governmental grants or issuances ("**Foreign Rights**"), and including the right to file foreign applications directly in the name of Assignee, its successors and assigns;
6. The right to claim priority rights deriving from the Patents;
7. All causes of action and remedies related to the Patents, the Inventions, Potential Patents, or Foreign Rights (including, without limitation, the right to sue for past, present, or future infringement, misappropriation or violation of rights related to any of the foregoing and the right to collect royalties and other payments under or on account of any of the foregoing); and
8. Any and all other rights and interests arising out of, in connection with, or in relation to, the Patents, the Inventions, Potential Patents, or Foreign Rights.

Patent or Application No.	Filing Date	Title of Patent and First Named Inventor
12/688,996	01-18-2010	METHODS, SYSTEMS, AND COMPUTER PROGRAM PRODUCTS FOR TRAVERSING NODES IN PATH ON A DISPLAY DEVICE Robert Paul Morris
13/023,883	02-09-2011	METHODS, SYSTEMS, AND COMPUTER PROGRAM PRODUCTS FOR DIRECTING ATTENTION OF AN OCCUPANT OF AN AUTOMOTIVE VEHICLE TO A VIEWPORT Robert Paul Morris

Patent or Application No.	Filing Date	Title of Patent and First Named Inventor
8,422,858	01-21-2010	METHODS, SYSTEMS, AND COMPUTER PROGRAM PRODUCTS FOR COORDINATING PLAYING OF MEDIA STREAMS Robert Paul Morris
13/790,082	03-08-2013	METHODS, SYSTEMS, AND COMPUTER PROGRAM PRODUCTS FOR COORDINATING PLAYING OF MEDIA STREAMS Robert Paul Morris
12/696,854	01-29-2010	METHODS, SYSTEMS, AND COMPUTER PROGRAM PRODUCTS FOR CONTROLLING PLAY OF MEDIA STREAMS Robert Paul Morris
12/689,169	01-18-2010	METHODS, SYSTEMS, AND COMPUTER PROGRAM PRODUCTS FOR AUTOMATICALLY SELECTING OBJECTS IN A PLURALITY OF OBJECTS Robert Paul Morris
12/868,767	08-26-2010	METHODS, SYSTEMS, AND COMPUTER PROGRAM PRODUCTS FOR NAVIGATING BETWEEN VISUAL COMPONENTS Robert Paul Morris
13/045,556	03-11-2011	METHODS, SYSTEMS, AND COMPUTER PROGRAM PRODUCTS FOR PROVIDING FEEDBACK TO A USER OF A PORTABLE ELECTRONIC DEVICE IN MOTION Robert Paul Morris
12/689,177	01-18-2010	METHODS, SYSTEMS, AND COMPUTER PROGRAM PRODUCTS FOR AUTOMATING OPERATIONS ON A PLURALITY OF OBJECTS Robert Paul Morris

Patent or Application No.	Filing Date	Title of Patent and First Named Inventor
12/955,993	11-30-2010	METHODS, SYSTEMS, AND COMPUTER PROGRAM PRODUCTS FOR AUTOMATICALLY SCROLLING ITEMS IN A SELECTION CONTROL Robert Paul Morris
8,346,853	05-27-2010	METHODS, SYSTEMS, AND COMPUTER PROGRAM PRODUCTS FOR PROCESSING AN ATTACHED COMMAND RESPONSE Robert Paul Morris
13/685,739	11-27-2012	METHODS, SYSTEMS, AND COMPUTER PROGRAM PRODUCTS FOR PROCESSING AN ATTACHED COMMAND RESPONSE Robert Paul Morris
12/714,063	02-26-2010	METHODS, SYSTEMS, AND COMPUTER PROGRAM PRODUCTS FOR DETECTING AN IDLE TCP CONNECTION Robert Paul Morris
12/705,638	02-15-2010	METHODS, SYSTEMS, AND COMPUTER PROGRAM PRODUCTS FOR DELAYING PRESENTATION OF AN UPDATE TO A USER INTERFACE Robert Paul Morris
8,219,606	02-27-2010	METHODS, SYSTEMS, AND COMPUTER PROGRAM PRODUCTS FOR SHARING INFORMATION FOR DETECTING AN IDLE TCP CONNECTION Robert Paul Morris
13/477,402	05-22-2012	METHODS, SYSTEMS, AND COMPUTER PROGRAM PRODUCTS FOR SHARING INFORMATION FOR DETECTING AN IDLE TCP CONNECTION Robert Paul Morris

Patent or Application No.	Filing Date	Title of Patent and First Named Inventor
12/857,836	08-17-2010	METHODS, SYSTEMS, AND COMPUTER PROGRAM PRODUCTS FOR MAINTAINING A RESOURCE BASED ON A COST OF ENERGY Robert Paul Morris
12/857,847	08-17-2010	METHODS, SYSTEMS, AND COMPUTER PROGRAM PRODUCTS FOR PRESENTING AN INDICATION OF A COST OF PROCESSING A RESOURCE Robert Paul Morris
12/758,125	04-12-2010	METHODS, SYSTEMS, AND COMPUTER PROGRAM PRODUCTS FOR MANAGING AN IDLE COMPUTING COMPONENT Robert Paul Morris
12/956,008	11-30-2010	METHODS, SYSTEMS, AND COMPUTER PROGRAM PRODUCTS FOR BINDING ATTRIBUTES BETWEEN VISUAL COMPONENTS Robert Paul Morris
12/788,373	05-27-2010	METHODS, SYSTEMS, AND COMPUTER PROGRAM PRODUCTS FOR PREVENTING PROCESSING OF AN HTTP RESPONSE Robert Paul Morris
13/023,916	02-09-2011	METHODS, SYSTEMS, AND COMPUTER PROGRAM PRODUCTS FOR DIRECTING ATTENTION TO A SEQUENCE OF VIEWPORTS OF AN AUTOMOTIVE VEHICLE Robert Paul Morris
12/857,857	08-17-2010	METHODS, SYSTEMS, AND COMPUTER PROGRAM PRODUCTS FOR SELECTING A RESOURCE IN RESPONSE TO A CHANGE IN AVAILABLE ENERGY Robert Paul Morris

Patent or Application No.	Filing Date	Title of Patent and First Named Inventor
12/758,828	04-13-2010	METHODS, SYSTEMS, AND COMPUTER PROGRAM PRODUCTS FOR IDENTIFYING AN IDLE USER INTERFACE ELEMENT Robert Paul Morris
8,233,482	04-22-2010	METHODS, SYSTEMS, AND COMPUTER PROGRAM PRODUCTS FOR DISABLING AN OPERATIVE COUPLING TO A NETWORK Robert Paul Morris
13/531,544	06-24-2012	METHODS, SYSTEMS, AND COMPUTER PROGRAM PRODUCTS FOR DISABLING AN OPERATIVE COUPLING TO A NETWORK Robert Paul Morris
12/819,214	06-20-2010	METHODS, SYSTEMS, AND COMPUTER PROGRAM PRODUCTS FOR IDENTIFYING A CONTACTEE IN A COMMUNICATION Robert Paul Morris
8,331,372	04-22-2010	METHODS, SYSTEMS, AND COMPUTER PROGRAM PRODUCTS FOR ENABLING AN OPERATIVE COUPLING TO A NETWORK Robert Paul Morris
13/663,513	10-30-2012	METHODS, SYSTEMS, AND COMPUTER PROGRAM PRODUCTS FOR ENABLING AN OPERATIVE COUPLING TO A NETWORK Robert Paul Morris
12/830,385	07-05-2010	METHODS, SYSTEMS, AND COMPUTER PROGRAM PRODUCTS FOR CONFIGURING ACCESS TO A DATA SOURCE BASED ON A CHANNEL IDENTIFIER Robert Paul Morris

Patent or Application No.	Filing Date	Title of Patent and First Named Inventor
12/789,538	05-28-2010	METHODS, SYSTEMS, AND COMPUTER PROGRAM PRODUCTS FOR PROCESSING AN ATTACHED COMMAND RESPONSE BASED ON A MARKUP ELEMENT Robert Paul Morris
12/789,550	05-28-2010	METHODS, SYSTEMS, AND COMPUTER PROGRAM PRODUCTS FOR PROCESSING A NON-RETURNABLE COMMAND RESPONSE BASED ON A MARKUP ELEMENT Robert Paul Morris
13/941,502	07-14-2013	METHODS, SYSTEMS, AND COMPUTER PROGRAM PRODUCTS FOR PROCESSING A NON-RETURNABLE COMMAND RESPONSE BASED ON A MARKUP ELEMENT Robert Paul Morris
12/788,381	05-27-2010	METHODS, SYSTEMS, AND COMPUTER PROGRAM PRODUCTS FOR PROCESSING A COMBINED COMMAND RESPONSE Robert Paul Morris
12/789,568	05-28-2010	METHODS, SYSTEMS, AND COMPUTER PROGRAM PRODUCTS FOR PROCESSING A COMBINED COMMAND RESPONSE BASED ON A MARKUP ELEMENT Robert Paul Morris
12/819,215	06-20-2010	METHODS, SYSTEMS, AND COMPUTER PROGRAM PRODUCTS FOR IDENTIFYING A COMMUNICANT IN A COMMUNICATION Robert Paul Morris

Patent or Application No.	Filing Date	Title of Patent and First Named Inventor
8,447,819	07-09-2010	METHODS, SYSTEMS, AND COMPUTER PROGRAM PRODUCTS FOR PROCESSING A REQUEST FOR A RESOURCE IN A COMMUNICATION Robert Paul Morris
13/867,040	04-20-2013	METHODS, SYSTEMS, AND COMPUTER PROGRAM PRODUCTS FOR PROCESSING A REQUEST FOR A RESOURCE IN A COMMUNICATION Robert Paul Morris
12/833,016	07-09-2010	METHODS, SYSTEMS, AND COMPUTER PROGRAM PRODUCTS FOR REFERENCING AN ATTACHMENT IN A COMMUNICATION Robert Paul Morris
12/830,389	07-05-2010	METHODS, SYSTEMS, AND COMPUTER PROGRAM PRODUCTS FOR PROCESSING A CONTEXTUAL CHANNEL IDENTIFIER Robert Paul Morris
12/830,388	07-05-2010	METHODS, SYSTEMS, AND COMPUTER PROGRAM PRODUCTS FOR SELECTING A DATA SOURCE BASED ON A CHANNEL IDENTIFIER Robert Paul Morris
12/857,851	08-17-2010	METHODS, SYSTEMS, AND COMPUTER PROGRAM PRODUCTS FOR SELECTING A RESOURCE BASED ON A MEASURE OF A PROCESSING COST Robert Paul Morris
12/830,392	07-05-2010	METHODS, SYSTEMS, AND COMPUTER PROGRAM PRODUCTS FOR CONFIGURING A CONTEXTUAL CHANNEL IDENTIFIER Robert Paul Morris

Patent or Application No.	Filing Date	Title of Patent and First Named Inventor
13/025,939	02-11-2011	METHODS, SYSTEMS, AND COMPUTER PROGRAM PRODUCTS FOR PROVIDING STEERING-CONTROL FEEDBACK TO AN OPERATOR OF AN AUTOMOTIVE VEHICLE Robert Paul Morris
13/025,944	02-11-2011	METHODS, SYSTEMS, AND COMPUTER PROGRAM PRODUCTS FOR MANAGING ATTENTION OF A USER OF A PORTABLE ELECTRONIC DEVICE Robert Paul Morris
13/024,444	02-10-2011	METHODS, SYSTEMS, AND COMPUTER PROGRAM PRODUCTS FOR MANAGING OPERATION OF A PORTABLE ELECTRONIC DEVICE Robert Paul Morris
13/023,932	02-09-2011	METHODS, SYSTEMS, AND COMPUTER PROGRAM PRODUCTS FOR ALTERING ATTENTION OF AN AUTOMOTIVE VEHICLE OPERATOR Robert Paul Morris
13/023,952	02-09-2011	METHODS, SYSTEMS, AND COMPUTER PROGRAM PRODUCTS FOR MANAGING ATTENTION OF AN OPERATOR AN AUTOMOTIVE VEHICLE Robert Paul Morris
13/024,466	02-10-2011	METHODS, SYSTEMS, AND COMPUTER PROGRAM PRODUCTS FOR MANAGING OPERATION OF AN AUTOMOTIVE VEHICLE Robert Paul Morris

Assignors will not sign any writing or do any act conflicting with this Assignment, and, without further compensation, will sign all documents and do such additional acts as Assignee, its successors, legal representatives, and assigns deem necessary or desirable to perfect enjoyment of the Rights, conduct proceedings regarding the Rights (including any litigation or interference proceedings), or perfect or defend title to the Rights. Assignors request the respective patent office

or governmental agency in each jurisdiction to issue any and all patents, certificates of invention, utility models, or other governmental grants or issuances that may be granted upon any of the Rights in the name of the Assignee, as the assignee to the entire interest therein.

The terms and conditions of this Assignment will inure to the benefit of Assignee, its successors, legal representatives, and assigns and will be binding upon Assignors, their successors, legal representatives and assigns.

Robert Paul Morris

Name: Robert Paul Morris
(Signature MUST be attested)

ATTESTATION OF SIGNATURE PURSUANT TO 28 U.S.C. § 1746

The undersigned witnessed the signature of Robert Paul Morris to the above Assignment of Patent Rights and makes the following statements:

1. I am over the age of 18 and competent to testify as to the facts in this Attestation block if called upon to do so.

2. Robert Paul Morris is personally known to me (or proved to me on the basis of satisfactory evidence) and appeared before me on _____, 2013 to execute the above Assignment of Patent Rights.

3. Robert Paul Morris subscribed to the above Assignment of Patent Rights.

I declare under penalty of perjury under the laws of the United States of America that the statements made in the three (3) numbered paragraphs immediately above are true and correct.

EXECUTED on Sept 27, 2013

J. Dewey Lawson III

Print Name: J. Dewey Lawson, III

UNITED STATES PATENT AND TRADEMARK OFFICE

UNITED STATES DEPARTMENT OF COMMERCE
United States Patent and Trademark Office
Address: COMMISSIONER FOR PATENTS
P.O. Box 1450
Alexandria, Virginia 22313-1450
www.uspto.gov

APPLICATION NUMBER	FILING OR 371(C) DATE	FIRST NAMED APPLICANT	ATTY. DOCKET NO./TITLE
12/714,063	02/26/2010	Robert Paul Morris	0110-SP

CONFIRMATION NO. 5929

POA ACCEPTANCE LETTER

92045
The Caldwell Firm, LLC
PO Box 59655
Dept. SVIPGP
Dallas, TX 75229

OC000000064594582

Date Mailed: 10/31/2013

NOTICE OF ACCEPTANCE OF POWER OF ATTORNEY

This is in response to the Power of Attorney filed 10/23/2013.

The Power of Attorney in this application is accepted. Correspondence in this application will be mailed to the above address as provided by 37 CFR 1.33.

/kgebremichael/

Office of Data Management, Application Assistance Unit (571) 272-4000, or (571) 272-4200, or 1-888-786-0101

ASSIGNMENT OF PATENT RIGHTS

For valuable consideration, the receipt and sufficiency of which is hereby acknowledged, on this 5th day of September, 2013, Robert Paul Morris of Wake County, Raleigh, North Carolina, a person, ("**Assignor**"), hereby sells, assigns, and transfers to Sitting Man, LLC, a Delaware limited liability company ("**Assignee**"), the full extent of all right, title, and interest in and to any and all of the following (collectively, the "**Rights**"):

1. The patents, provisional patent applications and patent applications listed in the table below (individually and collectively referred to herein as the "**Patents**");
2. All inventions claimed or described in the Patents (collectively, the "**Inventions**");
3. All rights with respect to the Inventions, including all U.S. patents or other governmental grants or issuances that may be granted with respect to the Inventions or from any direct or indirect divisionals, continuations, continuations-in-part, or other patent applications claiming priority rights from the Patents ("**Potential Patents**");
4. All reissues, reexaminations, extensions, registrations, or any and all priority patent application(s) of the Patents or Potential Patents;
5. All non-United States patents, patent applications, and counterparts relating to any or all of the Inventions, the Patents, or Potential Patents, including, without limitation, certificates of invention, utility models, industrial design protection, design patent protection, and other governmental grants or issuances ("**Foreign Rights**"), and including the right to file foreign applications directly in the name of Assignee, its successors and assigns;
6. The right to claim priority rights deriving from the Patents;
7. All causes of action and remedies related to the Patents, the Inventions, Potential Patents, or Foreign Rights (including, without limitation, the right to sue for past, present, or future infringement, misappropriation or violation of rights related to any of the foregoing and the right to collect royalties and other payments under or on account of any of the foregoing); and
8. Any and all other rights and interests arising out of, in connection with, or in relation to, the Patents, the Inventions, Potential Patents, or Foreign Rights.

Patent or Application No.	Filing Date	Title of Patent and First Named Inventor
12/688,996	01-18-2010	METHODS, SYSTEMS, AND COMPUTER PROGRAM PRODUCTS FOR TRAVERSING NODES IN PATH ON A DISPLAY DEVICE Robert Paul Morris
13/023,883	02-09-2011	METHODS, SYSTEMS, AND COMPUTER PROGRAM PRODUCTS FOR DIRECTING ATTENTION OF AN OCCUPANT OF AN AUTOMOTIVE VEHICLE TO A VIEWPORT Robert Paul Morris

Patent or Application No.	Filing Date	Title of Patent and First Named Inventor
8,422,858	01-21-2010	METHODS, SYSTEMS, AND COMPUTER PROGRAM PRODUCTS FOR COORDINATING PLAYING OF MEDIA STREAMS Robert Paul Morris
13/790,082	03-08-2013	METHODS, SYSTEMS, AND COMPUTER PROGRAM PRODUCTS FOR COORDINATING PLAYING OF MEDIA STREAMS Robert Paul Morris
12/696,854	01-29-2010	METHODS, SYSTEMS, AND COMPUTER PROGRAM PRODUCTS FOR CONTROLLING PLAY OF MEDIA STREAMS Robert Paul Morris
12/689,169	01-18-2010	METHODS, SYSTEMS, AND COMPUTER PROGRAM PRODUCTS FOR AUTOMATICALLY SELECTING OBJECTS IN A PLURALITY OF OBJECTS Robert Paul Morris
12/868,767	08-26-2010	METHODS, SYSTEMS, AND COMPUTER PROGRAM PRODUCTS FOR NAVIGATING BETWEEN VISUAL COMPONENTS Robert Paul Morris
13/045,556	03-11-2011	METHODS, SYSTEMS, AND COMPUTER PROGRAM PRODUCTS FOR PROVIDING FEEDBACK TO A USER OF A PORTABLE ELECTRONIC DEVICE IN MOTION Robert Paul Morris
12/689,177	01-18-2010	METHODS, SYSTEMS, AND COMPUTER PROGRAM PRODUCTS FOR AUTOMATING OPERATIONS ON A PLURALITY OF OBJECTS Robert Paul Morris

Patent or Application No.	Filing Date	Title of Patent and First Named Inventor
12/955,993	11-30-2010	METHODS, SYSTEMS, AND COMPUTER PROGRAM PRODUCTS FOR AUTOMATICALLY SCROLLING ITEMS IN A SELECTION CONTROL Robert Paul Morris
8,346,853	05-27-2010	METHODS, SYSTEMS, AND COMPUTER PROGRAM PRODUCTS FOR PROCESSING AN ATTACHED COMMAND RESPONSE Robert Paul Morris
13/685,739	11-27-2012	METHODS, SYSTEMS, AND COMPUTER PROGRAM PRODUCTS FOR PROCESSING AN ATTACHED COMMAND RESPONSE Robert Paul Morris
12/714,063	02-26-2010	METHODS, SYSTEMS, AND COMPUTER PROGRAM PRODUCTS FOR DETECTING AN IDLE TCP CONNECTION Robert Paul Morris
12/705,638	02-15-2010	METHODS, SYSTEMS, AND COMPUTER PROGRAM PRODUCTS FOR DELAYING PRESENTATION OF AN UPDATE TO A USER INTERFACE Robert Paul Morris
8,219,606	02-27-2010	METHODS, SYSTEMS, AND COMPUTER PROGRAM PRODUCTS FOR SHARING INFORMATION FOR DETECTING AN IDLE TCP CONNECTION Robert Paul Morris
13/477,402	05-22-2012	METHODS, SYSTEMS, AND COMPUTER PROGRAM PRODUCTS FOR SHARING INFORMATION FOR DETECTING AN IDLE TCP CONNECTION Robert Paul Morris

Patent or Application No.	Filing Date	Title of Patent and First Named Inventor
12/857,836	08-17-2010	METHODS, SYSTEMS, AND COMPUTER PROGRAM PRODUCTS FOR MAINTAINING A RESOURCE BASED ON A COST OF ENERGY Robert Paul Morris
12/857,847	08-17-2010	METHODS, SYSTEMS, AND COMPUTER PROGRAM PRODUCTS FOR PRESENTING AN INDICATION OF A COST OF PROCESSING A RESOURCE Robert Paul Morris
12/758,125	04-12-2010	METHODS, SYSTEMS, AND COMPUTER PROGRAM PRODUCTS FOR MANAGING AN IDLE COMPUTING COMPONENT Robert Paul Morris
12/956,008	11-30-2010	METHODS, SYSTEMS, AND COMPUTER PROGRAM PRODUCTS FOR BINDING ATTRIBUTES BETWEEN VISUAL COMPONENTS Robert Paul Morris
12/788,373	05-27-2010	METHODS, SYSTEMS, AND COMPUTER PROGRAM PRODUCTS FOR PREVENTING PROCESSING OF AN HTTP RESPONSE Robert Paul Morris
13/023,916	02-09-2011	METHODS, SYSTEMS, AND COMPUTER PROGRAM PRODUCTS FOR DIRECTING ATTENTION TO A SEQUENCE OF VIEWPORTS OF AN AUTOMOTIVE VEHICLE Robert Paul Morris
12/857,857	08-17-2010	METHODS, SYSTEMS, AND COMPUTER PROGRAM PRODUCTS FOR SELECTING A RESOURCE IN RESPONSE TO A CHANGE IN AVAILABLE ENERGY Robert Paul Morris

Patent or Application No.	Filing Date	Title of Patent and First Named Inventor
12/758,828	04-13-2010	METHODS, SYSTEMS, AND COMPUTER PROGRAM PRODUCTS FOR IDENTIFYING AN IDLE USER INTERFACE ELEMENT Robert Paul Morris
8,233,482	04-22-2010	METHODS, SYSTEMS, AND COMPUTER PROGRAM PRODUCTS FOR DISABLING AN OPERATIVE COUPLING TO A NETWORK Robert Paul Morris
13/531,544	06-24-2012	METHODS, SYSTEMS, AND COMPUTER PROGRAM PRODUCTS FOR DISABLING AN OPERATIVE COUPLING TO A NETWORK Robert Paul Morris
12/819,214	06-20-2010	METHODS, SYSTEMS, AND COMPUTER PROGRAM PRODUCTS FOR IDENTIFYING A CONTACTEE IN A COMMUNICATION Robert Paul Morris
8,331,372	04-22-2010	METHODS, SYSTEMS, AND COMPUTER PROGRAM PRODUCTS FOR ENABLING AN OPERATIVE COUPLING TO A NETWORK Robert Paul Morris
13/663,513	10-30-2012	METHODS, SYSTEMS, AND COMPUTER PROGRAM PRODUCTS FOR ENABLING AN OPERATIVE COUPLING TO A NETWORK Robert Paul Morris
12/830,385	07-05-2010	METHODS, SYSTEMS, AND COMPUTER PROGRAM PRODUCTS FOR CONFIGURING ACCESS TO A DATA SOURCE BASED ON A CHANNEL IDENTIFIER Robert Paul Morris

Patent or Application No.	Filing Date	Title of Patent and First Named Inventor
12/789,538	05-28-2010	METHODS, SYSTEMS, AND COMPUTER PROGRAM PRODUCTS FOR PROCESSING AN ATTACHED COMMAND RESPONSE BASED ON A MARKUP ELEMENT Robert Paul Morris
12/789,550	05-28-2010	METHODS, SYSTEMS, AND COMPUTER PROGRAM PRODUCTS FOR PROCESSING A NON-RETURNABLE COMMAND RESPONSE BASED ON A MARKUP ELEMENT Robert Paul Morris
13/941,502	07-14-2013	METHODS, SYSTEMS, AND COMPUTER PROGRAM PRODUCTS FOR PROCESSING A NON-RETURNABLE COMMAND RESPONSE BASED ON A MARKUP ELEMENT Robert Paul Morris
12/788,381	05-27-2010	METHODS, SYSTEMS, AND COMPUTER PROGRAM PRODUCTS FOR PROCESSING A COMBINED COMMAND RESPONSE Robert Paul Morris
12/789,568	05-28-2010	METHODS, SYSTEMS, AND COMPUTER PROGRAM PRODUCTS FOR PROCESSING A COMBINED COMMAND RESPONSE BASED ON A MARKUP ELEMENT Robert Paul Morris
12/819,215	06-20-2010	METHODS, SYSTEMS, AND COMPUTER PROGRAM PRODUCTS FOR IDENTIFYING A COMMUNICANT IN A COMMUNICATION Robert Paul Morris

Patent or Application No.	Filing Date	Title of Patent and First Named Inventor
8,447,819	07-09-2010	METHODS, SYSTEMS, AND COMPUTER PROGRAM PRODUCTS FOR PROCESSING A REQUEST FOR A RESOURCE IN A COMMUNICATION Robert Paul Morris
13/867,040	04-20-2013	METHODS, SYSTEMS, AND COMPUTER PROGRAM PRODUCTS FOR PROCESSING A REQUEST FOR A RESOURCE IN A COMMUNICATION Robert Paul Morris
12/833,016	07-09-2010	METHODS, SYSTEMS, AND COMPUTER PROGRAM PRODUCTS FOR REFERENCING AN ATTACHMENT IN A COMMUNICATION Robert Paul Morris
12/830,389	07-05-2010	METHODS, SYSTEMS, AND COMPUTER PROGRAM PRODUCTS FOR PROCESSING A CONTEXTUAL CHANNEL IDENTIFIER Robert Paul Morris
12/830,388	07-05-2010	METHODS, SYSTEMS, AND COMPUTER PROGRAM PRODUCTS FOR SELECTING A DATA SOURCE BASED ON A CHANNEL IDENTIFIER Robert Paul Morris
12/857,851	08-17-2010	METHODS, SYSTEMS, AND COMPUTER PROGRAM PRODUCTS FOR SELECTING A RESOURCE BASED ON A MEASURE OF A PROCESSING COST Robert Paul Morris
12/830,392	07-05-2010	METHODS, SYSTEMS, AND COMPUTER PROGRAM PRODUCTS FOR CONFIGURING A CONTEXTUAL CHANNEL IDENTIFIER Robert Paul Morris

Patent or Application No.	Filing Date	Title of Patent and First Named Inventor
13/025,939	02-11-2011	METHODS, SYSTEMS, AND COMPUTER PROGRAM PRODUCTS FOR PROVIDING STEERING-CONTROL FEEDBACK TO AN OPERATOR OF AN AUTOMOTIVE VEHICLE Robert Paul Morris
13/025,944	02-11-2011	METHODS, SYSTEMS, AND COMPUTER PROGRAM PRODUCTS FOR MANAGING ATTENTION OF A USER OF A PORTABLE ELECTRONIC DEVICE Robert Paul Morris
13/024,444	02-10-2011	METHODS, SYSTEMS, AND COMPUTER PROGRAM PRODUCTS FOR MANAGING OPERATION OF A PORTABLE ELECTRONIC DEVICE Robert Paul Morris
13/023,932	02-09-2011	METHODS, SYSTEMS, AND COMPUTER PROGRAM PRODUCTS FOR ALTERING ATTENTION OF AN AUTOMOTIVE VEHICLE OPERATOR Robert Paul Morris
13/023,952	02-09-2011	METHODS, SYSTEMS, AND COMPUTER PROGRAM PRODUCTS FOR MANAGING ATTENTION OF AN OPERATOR AN AUTOMOTIVE VEHICLE Robert Paul Morris
13/024,466	02-10-2011	METHODS, SYSTEMS, AND COMPUTER PROGRAM PRODUCTS FOR MANAGING OPERATION OF AN AUTOMOTIVE VEHICLE Robert Paul Morris

Assignors will not sign any writing or do any act conflicting with this Assignment, and, without further compensation, will sign all documents and do such additional acts as Assignee, its successors, legal representatives, and assigns deem necessary or desirable to perfect enjoyment of the Rights, conduct proceedings regarding the Rights (including any litigation or interference proceedings), or perfect or defend title to the Rights. Assignors request the respective patent office

or governmental agency in each jurisdiction to issue any and all patents, certificates of invention, utility models, or other governmental grants or issuances that may be granted upon any of the Rights in the name of the Assignee, as the assignee to the entire interest therein.

The terms and conditions of this Assignment will inure to the benefit of Assignee, its successors, legal representatives, and assigns and will be binding upon Assignors, their successors, legal representatives and assigns.

Name: Robert Paul Morris
(Signature MUST be attested)

ATTESTATION OF SIGNATURE PURSUANT TO 28 U.S.C. § 1746

The undersigned witnessed the signature of Robert Paul Morris to the above Assignment of Patent Rights and makes the following statements:

1. I am over the age of 18 and competent to testify as to the facts in this Attestation block if called upon to do so.

2. Robert Paul Morris is personally known to me (or proved to me on the basis of satisfactory evidence) and appeared before me on _____, 2013 to execute the above Assignment of Patent Rights.

3. Robert Paul Morris subscribed to the above Assignment of Patent Rights.

I declare under penalty of perjury under the laws of the United States of America that the statements made in the three (3) numbered paragraphs immediately above are true and correct.

EXECUTED on Sept 27, 2013

Print Name: J. Oscar Weaver, III

Electronic Acknowledgement Receipt

EFS ID:	17226324
Application Number:	12714063
International Application Number:	
Confirmation Number:	5929
Title of Invention:	METHODS, SYSTEMS, AND COMPUTER PROGRAM PRODUCTS FOR DETECTING AN IDLE TCP CONNECTION
First Named Inventor/Applicant Name:	Robert Paul Morris
Customer Number:	92045
Filer:	Patrick Edgar Caldwell
Filer Authorized By:	
Attorney Docket Number:	0110-SP
Receipt Date:	25-OCT-2013
Filing Date:	26-FEB-2010
Time Stamp:	10:44:08
Application Type:	Utility under 35 USC 111(a)

Payment information:

Submitted with Payment	no

File Listing:

Document Number	Document Description	File Name	File Size(Bytes)/ Message Digest	Multi Part /.zip	Pages (if appl.)
1	Miscellaneous Incoming Letter	Morris-SittingMan_Assignment_vF_9-5-13.pdf	769618 5dd85c282cf6ef37223a412e0cec878eb779f594	no	9

Warnings:

Information:

Total Files Size (in bytes):	769618

This Acknowledgement Receipt evidences receipt on the noted date by the USPTO of the indicated documents, characterized by the applicant, and including page counts, where applicable. It serves as evidence of receipt similar to a Post Card, as described in MPEP 503.

New Applications Under 35 U.S.C. 111
If a new application is being filed and the application includes the necessary components for a filing date (see 37 CFR 1.53(b)-(d) and MPEP 506), a Filing Receipt (37 CFR 1.54) will be issued in due course and the date shown on this Acknowledgement Receipt will establish the filing date of the application.

National Stage of an International Application under 35 U.S.C. 371
If a timely submission to enter the national stage of an international application is compliant with the conditions of 35 U.S.C. 371 and other applicable requirements a Form PCT/DO/EO/903 indicating acceptance of the application as a national stage submission under 35 U.S.C. 371 will be issued in addition to the Filing Receipt, in due course.

New International Application Filed with the USPTO as a Receiving Office
If a new international application is being filed and the international application includes the necessary components for an international filing date (see PCT Article 11 and MPEP 1810), a Notification of the International Application Number and of the International Filing Date (Form PCT/RO/105) will be issued in due course, subject to prescriptions concerning national security, and the date shown on this Acknowledgement Receipt will establish the international filing date of the application.

PTO/SB/80 (11-08)
Approved for use through 11/30/2011. OMB 0651-0035
U.S. Patent and Trademark Office; U.S. DEPARTMENT OF COMMERCE
Under the Paperwork Reduction Act of 1995, no persons are required to respond to a collection of information unless it displays a valid OMB control number.

POWER OF ATTORNEY TO PROSECUTE APPLICATIONS BEFORE THE USPTO

I hereby revoke all previous powers of attorney given in the application identified in the attached statement under 37 CFR 3.73(b).

I hereby appoint:

☑ Practitioners associated with the Customer Number: 92045

OR

☐ Practitioner(s) named below (if more than ten patent practitioners are to be named, then a customer number must be used):

Name	Registration Number	Name	Registration Number

as attorney(s) or agent(s) to represent the undersigned before the United States Patent and Trademark Office (USPTO) in connection with any and all patent applications assigned only to the undersigned according to the USPTO assignment records or assignment documents attached to this form in accordance with 37 CFR 3.73(b).

Please change the correspondence address for the application identified in the attached statement under 37 CFR 3.73(b) to:

☑ The address associated with Customer Number: 92045

OR

☐ Firm or Individual Name			
Address			
City		State	Zip
Country			
Telephone		Email	

Assignee Name and Address:

Sitting Man, LLC
712 Latta St
Raleigh, NC 27607

A copy of this form, together with a statement under 37 CFR 3.73(b) (Form PTO/SB/96 or equivalent) is required to be filed in each application in which this form is used. The statement under 37 CFR 3.73(b) may be completed by one of the practitioners appointed in this form if the appointed practitioner is authorized to act on behalf of the assignee, and must identify the application in which this Power of Attorney is to be filed.

SIGNATURE of Assignee of Record

The individual whose signature and title is supplied below is authorized to act on behalf of the assignee

Signature	/Robert Paul Morris/	Date
Name	Robert Paul Morris	Telephone
Title	Managing Member	

This collection of information is required by 37 CFR 1.31, 1.32 and 1.33. The information is required to obtain or retain a benefit by the public which is to file (and by the USPTO to process) an application. Confidentiality is governed by 35 U.S.C. 122 and 37 CFR 1.11 and 1.14. This collection is estimated to take 3 minutes to complete, including gathering, preparing, and submitting the completed application form to the USPTO. Time will vary depending upon the individual case. Any comments on the amount of time you require to complete this form and/or suggestions for reducing this burden, should be sent to the Chief Information Officer, U.S. Patent and Trademark Office, U.S. Department of Commerce, P.O. Box 1450, Alexandria, VA 22313-1450. DO NOT SEND FEES OR COMPLETED FORMS TO THIS ADDRESS. **SEND TO: Commissioner for Patents, P.O. Box 1450, Alexandria, VA 22313-1450.**

If you need assistance in completing the form, call 1-800-PTO-9199 and select option 2.

Privacy Act Statement

The **Privacy Act of 1974 (P.L. 93-579)** requires that you be given certain information in connection with your submission of the attached form related to a patent application or patent. Accordingly, pursuant to the requirements of the Act, please be advised that: (1) the general authority for the collection of this information is 35 U.S.C. 2(b)(2); (2) furnishing of the information solicited is voluntary; and (3) the principal purpose for which the information is used by the U.S. Patent and Trademark Office is to process and/or examine your submission related to a patent application or patent. If you do not furnish the requested information, the U.S. Patent and Trademark Office may not be able to process and/or examine your submission, which may result in termination of proceedings or abandonment of the application or expiration of the patent.

The information provided by you in this form will be subject to the following routine uses:

1. The information on this form will be treated confidentially to the extent allowed under the Freedom of Information Act (5 U.S.C. 552) and the Privacy Act (5 U.S.C 552a). Records from this system of records may be disclosed to the Department of Justice to determine whether disclosure of these records is required by the Freedom of Information Act.
2. A record from this system of records may be disclosed, as a routine use, in the course of presenting evidence to a court, magistrate, or administrative tribunal, including disclosures to opposing counsel in the course of settlement negotiations.
3. A record in this system of records may be disclosed, as a routine use, to a Member of Congress submitting a request involving an individual, to whom the record pertains, when the individual has requested assistance from the Member with respect to the subject matter of the record.
4. A record in this system of records may be disclosed, as a routine use, to a contractor of the Agency having need for the information in order to perform a contract. Recipients of information shall be required to comply with the requirements of the Privacy Act of 1974, as amended, pursuant to 5 U.S.C. 552a(m).
5. A record related to an International Application filed under the Patent Cooperation Treaty in this system of records may be disclosed, as a routine use, to the International Bureau of the World Intellectual Property Organization, pursuant to the Patent Cooperation Treaty.
6. A record in this system of records may be disclosed, as a routine use, to another federal agency for purposes of National Security review (35 U.S.C. 181) and for review pursuant to the Atomic Energy Act (42 U.S.C. 218(c)).
7. A record from this system of records may be disclosed, as a routine use, to the Administrator, General Services, or his/her designee, during an inspection of records conducted by GSA as part of that agency's responsibility to recommend improvements in records management practices and programs, under authority of 44 U.S.C. 2904 and 2906. Such disclosure shall be made in accordance with the GSA regulations governing inspection of records for this purpose, and any other relevant (*i.e.*, GSA or Commerce) directive. Such disclosure shall not be used to make determinations about individuals.
8. A record from this system of records may be disclosed, as a routine use, to the public after either publication of the application pursuant to 35 U.S.C. 122(b) or issuance of a patent pursuant to 35 U.S.C. 151. Further, a record may be disclosed, subject to the limitations of 37 CFR 1.14, as a routine use, to the public if the record was filed in an application which became abandoned or in which the proceedings were terminated and which application is referenced by either a published application, an application open to public inspection or an issued patent.
9. A record from this system of records may be disclosed, as a routine use, to a Federal, State, or local law enforcement agency, if the USPTO becomes aware of a violation or potential violation of law or regulation.

PTO/SB/96 (07-09)
Approved for use through 07/31/2012. OMB 0651-0031
U.S. Patent and Trademark Office; U.S. DEPARTMENT OF COMMERCE
Under the Paperwork Reduction Act of 1995, no persons are required to respond to a collection of information unless it displays a valid OMB control number.

STATEMENT UNDER 37 CFR 3.73(b)

Applicant/Patent Owner: Robert Paul Morris

Application No./Patent No.: 12/714,063 Filed/Issue Date: 02-26-2010

Titled: METHODS, SYSTEMS, AND COMPUTER PROGRAM PRODUCTS FOR DETECTING AN IDLE TCP CONNECTION

Sitting Man, LLC, a Limited Liability Company
(Name of Assignee) (Type of Assignee, e.g., corporation, partnership, university, government agency, etc.)

states that it is:

1. [X] the assignee of the entire right, title, and interest in;

2. [ ] an assignee of less than the entire right, title, and interest in
(The extent (by percentage) of its ownership interest is _____ %); or

3. [ ] the assignee of an undivided interest in the entirety of (a complete assignment from one of the joint inventors was made)

the patent application/patent identified above, by virtue of either:

A. [ ] An assignment from the inventor(s) of the patent application/patent identified above. The assignment was recorded in the United States Patent and Trademark Office at Reel _____, Frame _____, or for which a copy therefore is attached.

OR

B. [X] A chain of title from the inventor(s), of the patent application/patent identified above, to the current assignee as follows:

1. From: Robert Paul Morris To: Sitting Man, LLC

The document was recorded in the United States Patent and Trademark Office at
Reel _____, Frame _____, or for which a copy thereof is attached.

2. From: _____ To: _____

The document was recorded in the United States Patent and Trademark Office at
Reel _____, Frame _____, or for which a copy thereof is attached.

3. From: _____ To: _____

The document was recorded in the United States Patent and Trademark Office at
Reel _____, Frame _____, or for which a copy thereof is attached.

[ ] Additional documents in the chain of title are listed on a supplemental sheet(s).

[X] As required by 37 CFR 3.73(b)(1)(i), the documentary evidence of the chain of title from the original owner to the assignee was, or concurrently is being, submitted for recordation pursuant to 37 CFR 3.11.

[NOTE: A separate copy (*i.e.*, a true copy of the original assignment document(s)) must be submitted to Assignment Division in accordance with 37 CFR Part 3, to record the assignment in the records of the USPTO. See MPEP 302.08]

The undersigned (whose title is supplied below) is authorized to act on behalf of the assignee.

/Robert Paul Morris/	10/17/2013
Signature	Date
Robert Paul Morris	Managing Member
Printed or Typed Name	Title

This collection of information is required by 37 CFR 3.73(b). The information is required to obtain or retain a benefit by the public which is to file (and by the USPTO to process) an application. Confidentiality is governed by 35 U.S.C. 122 and 37 CFR 1.11 and 1.14. This collection is estimated to take 12 minutes to complete, including gathering, preparing, and submitting the completed application form to the USPTO. Time will vary depending upon the individual case. Any comments on the amount of time you require to complete this form and/or suggestions for reducing this burden, should be sent to the Chief Information Officer, U.S. Patent and Trademark Office, U.S. Department of Commerce, P.O. Box 1450, Alexandria, VA 22313-1450. DO NOT SEND FEES OR COMPLETED FORMS TO THIS ADDRESS. **SEND TO: Commissioner for Patents, P.O. Box 1450, Alexandria, VA 22313-1450.**

If you need assistance in completing the form, call 1-800-PTO-9199 and select option 2.

Privacy Act Statement

The **Privacy Act of 1974 (P.L. 93-579)** requires that you be given certain information in connection with your submission of the attached form related to a patent application or patent. Accordingly, pursuant to the requirements of the Act, please be advised that: (1) the general authority for the collection of this information is 35 U.S.C. 2(b)(2); (2) furnishing of the information solicited is voluntary; and (3) the principal purpose for which the information is used by the U.S. Patent and Trademark Office is to process and/or examine your submission related to a patent application or patent. If you do not furnish the requested information, the U.S. Patent and Trademark Office may not be able to process and/or examine your submission, which may result in termination of proceedings or abandonment of the application or expiration of the patent.

The information provided by you in this form will be subject to the following routine uses:

1. The information on this form will be treated confidentially to the extent allowed under the Freedom of Information Act (5 U.S.C. 552) and the Privacy Act (5 U.S.C 552a). Records from this system of records may be disclosed to the Department of Justice to determine whether disclosure of these records is required by the Freedom of Information Act.
2. A record from this system of records may be disclosed, as a routine use, in the course of presenting evidence to a court, magistrate, or administrative tribunal, including disclosures to opposing counsel in the course of settlement negotiations.
3. A record in this system of records may be disclosed, as a routine use, to a Member of Congress submitting a request involving an individual, to whom the record pertains, when the individual has requested assistance from the Member with respect to the subject matter of the record.
4. A record in this system of records may be disclosed, as a routine use, to a contractor of the Agency having need for the information in order to perform a contract. Recipients of information shall be required to comply with the requirements of the Privacy Act of 1974, as amended, pursuant to 5 U.S.C. 552a(m).
5. A record related to an International Application filed under the Patent Cooperation Treaty in this system of records may be disclosed, as a routine use, to the International Bureau of the World Intellectual Property Organization, pursuant to the Patent Cooperation Treaty.
6. A record in this system of records may be disclosed, as a routine use, to another federal agency for purposes of National Security review (35 U.S.C. 181) and for review pursuant to the Atomic Energy Act (42 U.S.C. 218(c)).
7. A record from this system of records may be disclosed, as a routine use, to the Administrator, General Services, or his/her designee, during an inspection of records conducted by GSA as part of that agency's responsibility to recommend improvements in records management practices and programs, under authority of 44 U.S.C. 2904 and 2906. Such disclosure shall be made in accordance with the GSA regulations governing inspection of records for this purpose, and any other relevant (*i.e.*, GSA or Commerce) directive. Such disclosure shall not be used to make determinations about individuals.
8. A record from this system of records may be disclosed, as a routine use, to the public after either publication of the application pursuant to 35 U.S.C. 122(b) or issuance of a patent pursuant to 35 U.S.C. 151. Further, a record may be disclosed, subject to the limitations of 37 CFR 1.14, as a routine use, to the public if the record was filed in an application which became abandoned or in which the proceedings were terminated and which application is referenced by either a published application, an application open to public inspection or an issued patent.
9. A record from this system of records may be disclosed, as a routine use, to a Federal, State, or local law enforcement agency, if the USPTO becomes aware of a violation or potential violation of law or regulation.

Electronic Acknowledgement Receipt

EFS ID:	17201898
Application Number:	12714063
International Application Number:	
Confirmation Number:	5929
Title of Invention:	METHODS, SYSTEMS, AND COMPUTER PROGRAM PRODUCTS FOR DETECTING AN IDLE TCP CONNECTION
First Named Inventor/Applicant Name:	Robert Paul Morris
Customer Number:	92924
Filer:	Patrick Edgar Caldwell
Filer Authorized By:	
Attorney Docket Number:	0110-SP
Receipt Date:	23-OCT-2013
Filing Date:	26-FEB-2010
Time Stamp:	10:17:39
Application Type:	Utility under 35 USC 111(a)

Payment information:

Submitted with Payment	no

File Listing:

Document Number	Document Description	File Name	File Size(Bytes)/ Message Digest	Multi Part /.zip	Pages (if appl.)
1	Power of Attorney	Morris_POA_pre_2012.pdf	435724 16c4e6143c6e06d8305afa69a2cfdb95096a8d40	no	2

Warnings:

Information:

2	Assignee showing of ownership per 37 CFR 3.73.	PMOR0110_373b.pdf	423051 b77477b6e0a00d7bb789a42e18cdd6d96717764b	no	2
Warnings:					
Information:					
			Total Files Size (in bytes):	858775	

This Acknowledgement Receipt evidences receipt on the noted date by the USPTO of the indicated documents, characterized by the applicant, and including page counts, where applicable. It serves as evidence of receipt similar to a Post Card, as described in MPEP 503.

<u>New Applications Under 35 U.S.C. 111</u>
If a new application is being filed and the application includes the necessary components for a filing date (see 37 CFR 1.53(b)-(d) and MPEP 506), a Filing Receipt (37 CFR 1.54) will be issued in due course and the date shown on this Acknowledgement Receipt will establish the filing date of the application.

<u>National Stage of an International Application under 35 U.S.C. 371</u>
If a timely submission to enter the national stage of an international application is compliant with the conditions of 35 U.S.C. 371 and other applicable requirements a Form PCT/DO/EO/903 indicating acceptance of the application as a national stage submission under 35 U.S.C. 371 will be issued in addition to the Filing Receipt, in due course.

<u>New International Application Filed with the USPTO as a Receiving Office</u>
If a new international application is being filed and the international application includes the necessary components for an international filing date (see PCT Article 11 and MPEP 1810), a Notification of the International Application Number and of the International Filing Date (Form PCT/RO/105) will be issued in due course, subject to prescriptions concerning national security, and the date shown on this Acknowledgement Receipt will establish the international filing date of the application.

UNITED STATES PATENT AND TRADEMARK OFFICE

UNITED STATES DEPARTMENT OF COMMERCE
United States Patent and Trademark Office
Address: COMMISSIONER FOR PATENTS
P.O. Box 1450
Alexandria, Virginia 22313-1450
www.uspto.gov

APPLICATION NO.	FILING DATE	FIRST NAMED INVENTOR	ATTORNEY DOCKET NO.	CONFIRMATION NO.
12/714,063	02/26/2010	Robert Paul Morris	0110-SP	5929

92924 7590 09/27/2013
Small Pond Associates, LLC
Robert Paul Morris
712 Latta Street
Raleigh, NC 27607

EXAMINER
COULTER, KENNETH R

ART UNIT	PAPER NUMBER
2445	

NOTIFICATION DATE	DELIVERY MODE
09/27/2013	ELECTRONIC

Please find below and/or attached an Office communication concerning this application or proceeding.

The time period for reply, if any, is set in the attached communication.

Notice of the Office communication was sent electronically on above-indicated "Notification Date" to the following e-mail address(es):

paul.morris@nc.rr.com
paul.morris@deeprv.com
dewey.weaver@deeprv.com

PTOL-90A (Rev. 04/07)

Office Action Summary	Application No. 12/714,063	Applicant(s) MORRIS, ROBERT PAUL	
	Examiner Kenneth R. Coulter	Art Unit 2445	AIA (First Inventor to File) Status No

-- The MAILING DATE of this communication appears on the cover sheet with the correspondence address --

Period for Reply

A SHORTENED STATUTORY PERIOD FOR REPLY IS SET TO EXPIRE 3 MONTH(S) OR THIRTY (30) DAYS, WHICHEVER IS LONGER, FROM THE MAILING DATE OF THIS COMMUNICATION.

- Extensions of time may be available under the provisions of 37 CFR 1.136(a). In no event, however, may a reply be timely filed after SIX (6) MONTHS from the mailing date of this communication.
- If NO period for reply is specified above, the maximum statutory period will apply and will expire SIX (6) MONTHS from the mailing date of this communication.
- Failure to reply within the set or extended period for reply will, by statute, cause the application to become ABANDONED (35 U.S.C. § 133). Any reply received by the Office later than three months after the mailing date of this communication, even if timely filed, may reduce any earned patent term adjustment. See 37 CFR 1.704(b).

Status

1)☒ Responsive to communication(s) filed on *2 June 2013*.

☐ A declaration(s)/affidavit(s) under **37 CFR 1.130(b)** was/were filed on _____.

2a)☒ This action is **FINAL**. 2b)☐ This action is non-final.

3)☐ An election was made by the applicant in response to a restriction requirement set forth during the interview on _____; the restriction requirement and election have been incorporated into this action.

4)☐ Since this application is in condition for allowance except for formal matters, prosecution as to the merits is closed in accordance with the practice under *Ex parte Quayle*, 1935 C.D. 11, 453 O.G. 213.

Disposition of Claims

5)☒ Claim(s) *1-25* is/are pending in the application.

5a) Of the above claim(s) _____ is/are withdrawn from consideration.

6)☐ Claim(s) _____ is/are allowed.

7)☒ Claim(s) *1-25* is/are rejected.

8)☐ Claim(s) _____ is/are objected to.

9)☐ Claim(s) _____ are subject to restriction and/or election requirement.

* If any claims have been determined allowable, you may be eligible to benefit from the **Patent Prosecution Highway** program at a participating intellectual property office for the corresponding application. For more information, please see http://www.uspto.gov/patents/init_events/pph/index.jsp or send an inquiry to PPHfeedback@uspto.gov.

Application Papers

10)☐ The specification is objected to by the Examiner.

11)☐ The drawing(s) filed on _____ is/are: a)☐ accepted or b)☐ objected to by the Examiner.

Applicant may not request that any objection to the drawing(s) be held in abeyance. See 37 CFR 1.85(a).

Replacement drawing sheet(s) including the correction is required if the drawing(s) is objected to. See 37 CFR 1.121(d).

Priority under 35 U.S.C. § 119

12)☐ Acknowledgment is made of a claim for foreign priority under 35 U.S.C. § 119(a)-(d) or (f).

Certified copies:

a)☐ All b)☐ Some * c)☐ None of the:

1.☐ Certified copies of the priority documents have been received.

2.☐ Certified copies of the priority documents have been received in Application No. _____.

3.☐ Copies of the certified copies of the priority documents have been received in this National Stage application from the International Bureau (PCT Rule 17.2(a)).

* See the attached detailed Office action for a list of the certified copies not received.

Interim copies:

a)☐ All b)☐ Some c)☐ None of the: Interim copies of the priority documents have been received.

Attachment(s)

1) ☐ Notice of References Cited (PTO-892)

2) ☐ Information Disclosure Statement(s) (PTO/SB/08) Paper No(s)/Mail Date _____.

3) ☐ Interview Summary (PTO-413) Paper No(s)/Mail Date. _____ .

4) ☐ Other: _____.

DETAILED ACTION

Claim Rejections - 35 USC § 102

The following is a quotation of the appropriate paragraphs of 35 U.S.C. 102 that form the basis for the rejections under this section made in this Office action:

> A person shall be entitled to a patent unless –
>
> (b) the invention was patented or described in a printed publication in this or a foreign country or in public use or on sale in this country, more than one year prior to the date of application for patent in the United States.

Claims 1 – 25 are rejected under 35 U.S.C. 102(b) as being anticipated by Sillasto et al. (U.S. Pat. Pub. No. 2005/0063304) (Release Timer for NRT Connection in Mobile Communication Network).

1.1 Regarding claim 1, Sillasto discloses a method for detecting an idle TCP connection, the method comprising:

receiving, by a first node from a second node, a first transmission control protocol (TCP) packet in a TCP connection (Figs. 4, 5; paragraphs 40, 52);

identifying a first idle time period header, in the first packet, for detecting a first idle time period during which no TCP packet including data in a first TCP data stream sent in the TCP connection from the second node is received by the first node (Figs. 4, 5; paragraphs 40, 52, 66, 67);

detecting the first idle time period based on the first idle time period header (Figs. 4, 5; paragraphs 40, 52); and

deactivating the TCP connection in response to detecting the first idle time period (Figs. 4, 5; paragraphs 40, 52, 56).

1.2 Per claim 2, Sillasto teaches the method of claim 1 wherein the TCP connection is identified by a first connection endpoint and a second connection endpoint, and the first node includes at least one of the first connection endpoint and a first proxy endpoint representing the first connection endpoint (Fig. 12; paragraphs 110, 111).

1.3 Regarding claim 3, Sillasto discloses the method of claim 1 wherein the first idle time period header identifies, for detecting the first idle time period, at least one of a duration of time, a generator for determining a duration of time, and an input for determining a duration of time (Figs. 4, 5; paragraphs 40, 52).

1.4 Per claim 4, Sillasto teaches the method of claim 1 further comprising modifying at least one of a TCP keep-alive option, a TCP user timeout, a retransmission timeout, an acknowledgment timeout, and another timeout associated with the TCP connection, in response to identifying the first idle time period header (Figs. 4, 5, 6, 7; paragraphs 40, 52).

1.5 Regarding claim 5, Sillasto discloses the method of claim 1 wherein detecting the first idle time period includes detecting a time period, in the first idle time period, during which the first node has received acknowledgment for all data in a second TCP data

stream sent in the TCP connection to the second node (Figs. 4, 5; paragraphs 40, 52).

1.6 Per claim 6, Sillasto teaches the method of claim 1 wherein the first idle time period header is based on a previous idle time period header identified in a previous TCP packet in the TCP connection sent by the first node to the second node prior to the receiving of the first TCP packet (Figs. 4, 5, 6, 7; paragraphs 40, 52).

1.7 Regarding claim 7, Sillasto discloses the method of claim 1 further comprising: detecting a timeout based on a duration of time identified by the first idle information header; and sending, in response to detecting the timeout, a TCP keep-alive packet in the TCP connection to the second node (Figs. 4, 5; paragraphs 40, 52).

1.8 Per claim 8, Sillasto teaches the method of claim 7 further comprising: detecting an acknowledgment timeout associated with sending the TCP keep-alive packet; and detecting the first idle time period based on detecting the acknowledgment timeout (Figs. 4, 5; paragraphs 40, 52).

1.9 Regarding claim 9, Sillasto discloses the method of claim 1 wherein detecting the first idle time period comprises: receiving an empty TCP packet including no data in the first TCP data stream after detecting a beginning of a potential first idle time period; in response to receiving the empty TCP packet, detecting a beginning of a next potential first idle time period (Figs. 4, 5, 6, 7; paragraphs 40, 52).

1.10 Per claim 10, Sillasto teaches the method of claim 9 wherein detecting the beginning of the next potential first idle time period is performed in response to determining the empty TCP packet matches a specified condition (Figs. 4, 5; paragraphs 40, 52).

1.11 Regarding claim 11, Sillasto discloses the method of claim 1 further comprising: receiving the first TCP packet after receiving a previous TCP packet including a previous idle time period header for detecting a previous idle time period; and detecting, in response to receiving the first TCP packet, the first idle time period rather than detecting the previous idle time period (Figs. 4, 5; paragraphs 40, 52).

1.12 Per claim 12, Sillasto teaches the method of claim 1 further comprising sending a second TCP packet in the TCP connection to the second node including an informational idle time period header identifying to the second node metadata for the first idle time period (Figs. 4, 5; paragraphs 40, 52).

1.13 Regarding claim 13, Sillasto discloses the method of claim 1 further comprising sending in the TCP connection a second TCP packet including a second idle time period header for detecting a second idle time period during which no TCP packet including data in a second TCP data stream sent in the TCP connection from the first node is received by the second node (Figs. 4, 5; paragraphs 40, 52).

1.14 Per claim 14, Sillasto teaches the method of claim 1 wherein deactivating includes at least one of closing the TCP connection, sending by the first node a TCP packet including a reset indication, Figs. 4, 5; paragraphs 40, 52and releasing a resource previously allocated for the TCP connection by the first node (Figs. 4, 5; paragraphs 40, 52).

1.15 Regarding claims 15 – 25, the rejection of claims 1 – 14 under 35 USC 102(b) (paragraphs 1.1 – 1.14 above) applies fully.

Response to Arguments

Applicant's arguments filed 6/2/2013 have been fully considered but they are not persuasive.

Applicant argues that Sillasto does not disclose identifying a first idle time period header, in the first packet, **for detecting a first idle time period during which no TCP packet including data in a first TCP data stream sent in the TCP connection from the second node is received by the first node**.

In addition, Applicant argues that Sillasto does not teach deactivating the TCP connection in response to detecting the first idle time period.

Examiner disagrees.

Sillasto teaches identifying a first idle time period header, in the first packet, for detecting a first idle time period during which no TCP packet including data in a first TCP data stream sent in the TCP connection from the second node is received by the first node (Figs. 4, 5; paragraph 40 "; paragraphs 52, 66; paragraph 67).

Sillasto discloses deactivating the TCP connection in response to detecting the first idle time period (Figs. 4, 5; paragraph 40; paragraph 52 "Each side of the TCP connection ends one direction of the TCP connection …"; paragraph 56 "The inactivity timer expires. The DCH connection ends").

Conclusion

THIS ACTION IS MADE FINAL. Applicant is reminded of the extension of time policy as set forth in 37 CFR 1.136(a).

A shortened statutory period for reply to this final action is set to expire THREE MONTHS from the mailing date of this action. In the event a first reply is filed within TWO MONTHS of the mailing date of this final action and the advisory action is not mailed until after the end of the THREE-MONTH shortened statutory period, then the shortened statutory period will expire on the date the advisory action is mailed, and any extension fee pursuant to 37 CFR 1.136(a) will be calculated from the mailing date of the advisory action. In no event, however, will the statutory period for reply expire later than SIX MONTHS from the mailing date of this final action.

Any inquiry concerning this communication or earlier communications from the examiner should be directed to Kenneth R. Coulter whose telephone number is (571)272-3879. The examiner can normally be reached on M - F, 7:30 am - 4 pm.

If attempts to reach the examiner by telephone are unsuccessful, the examiner's supervisor, Lynn Feild can be reached on 571 272-2092. The fax phone number for the organization where this application or proceeding is assigned is 571-273-8300.

Information regarding the status of an application may be obtained from the Patent Application Information Retrieval (PAIR) system. Status information for published applications may be obtained from either Private PAIR or Public PAIR. Status information for unpublished applications is available through Private PAIR only. For more information about the PAIR system, see http://pair-direct.uspto.gov. Should you have questions on access to the Private PAIR system, contact the Electronic Business Center (EBC) at 866-217-9197 (toll-free). If you would like assistance from a USPTO Customer Service Representative or access to the automated information system, call 800-786-9199 (IN USA OR CANADA) or 571-272-1000.

Kenneth Coulter
/Kenneth R Coulter/
Primary Examiner, Art Unit 2445

/KRC/

Search Notes	Application/Control No.	Applicant(s)/Patent Under Reexamination
	12714063	MORRIS, ROBERT PAUL
	Examiner	**Art Unit**
	KENNETH R COULTER	2445

CPC- SEARCHED

Symbol	Date	Examiner

CPC COMBINATION SETS - SEARCHED

Symbol	Date	Examiner

US CLASSIFICATION SEARCHED

Class	Subclass	Date	Examiner
709	227, 228, 232	6/17/2013	/KRC/
713	500	6/17/2013	/KRC/

SEARCH NOTES

Search Notes	Date	Examiner
WEST: USPT, PGPB, EPAB, DWPI	6/17/2013	/KRC/
searched for possible double patenting, including U.S. Pat. No. 8,219,606	6/17/2013	/KRC/

INTERFERENCE SEARCH

US Class/ CPC Symbol	US Subclass / CPC Group	Date	Examiner

	/KENNETH R COULTER/ Primary Examiner.Art Unit 2445

WEST Search History

Hide Items | Restore | Clear | Close

DATE: Monday, June 17, 2013

Hide?	Set Name	Query	Hit Count
Prior Art			
DB=EPAB,DWPI; PLUR=YES; OP=ADJ			
	L20	l16 and L19 `Morris'063`	1
	L19	(deactiv$ or disconnect$ or de-activ$ or dis-connect$) near4 connection	11918
	L18	L17 and l16 `Morris'063`	1
	L17	(deactiv$ or disconnect$ or de-activ$ or dis-connect$) near4 (TCP connection)	19
	L16	(idl$ or inact$) near12 header	72
DB=PGPB,USPT; PLUR=YES; OP=ADJ			
	L15	l12 and l13 `Morris'063,'454,'606`	3
	L14	l9 and L13	6
	L13	(709/227 or 709/228 or 709/232 or 713/500).ccls.	20190
	L12	L11 and l3 `Morris;Sillasto'304`	5
	L11	(idl$ or inact$) near4 (TCP connection)	155
	L10	L9 same header `Morris`	5
	L9	l4 same (idl$ or inactiv$)	25
	L8	L7 and TCP `Morris`	7
	L7	l3 same L6 `Morris`	7
	L6	(deactiv$ or disconnect$ or de-activ$ or dis-connect$) near4 connection	58809
	L5	L4 and l3 `Morris`	4
	L4	(deactiv$ or disconnect$ or de-activ$ or dis-connect$) near4 (TCP connection)	298
	L3	(idl$ or inact$) near12 header	1835
	L2	8219606[uref]	0
	L1	8219606[pn] `Morris'606`	1

END OF SEARCH HISTORY

IN THE UNITED STATES PATENT AND TRADEMARK OFFICE

In re Patent Application of:

Robert Paul Morris

Application No.: 12/714,063

Filed: 02/26/2010

For: Method, Systems, and Computer Program Products for Detecting an Idle TCP Connection

Mail Stop: Amendment

T.C/Art Unit: 2445

Examiner: Coulter, Kenneth R.

Confirmation No.: 5929

* *

RESPONSE UNDER 37 C.F.R. §1.111

Mail Stop: Amendment
Commissioner for Patents
P.O. Box 1450
Alexandria, VA 22313-1450

Sir:

This paper is responsive to the Office Action mailed 03/04/2013, for which a shortened statutory period for reply is set to expire on 06/04/2013. Entry and favorable consideration of the following Amendments and Remarks is respectfully requested.

Amendments to the Specification begin on page 2 of this paper.

Remarks begin on page 4 of this paper.

Amendments to the Specification:

Note: Amendments to the spec are strikethrough deletions and underline insertions. Only a marked up copy is required.

Please insert the following paragraphs before paragraph 0001 in the previously presented specification with the following and renumber all other paragraphs accordingly:

[0001] This application is related to the following commonly owned U.S. Patent Applications: Application No. 12/714,063 (Docket No 0110) filed on 2010/02/26, entitled "Methods, Systems, and Program Products for Detecting an Idle TCP Connection"; and.
[0002] Application No. 13/477,402 (Docket No 0120C) filed on 2012/05/22, entitled "Methods, Systems, and Program Products for Detecting an Idle TCP Connection".

Please replace paragraph numbered 0063 in the previously presented specification and numbered 0065 in the specification as currently amended with the following:

[0065] A node including a TCP connection endpoint is referred to as a host. Hosts are typically user devices and/or servers that typically operate at the edge of a network. While endpoints of most TCP connections are not typically included in network nodes for relaying, routing, and/or otherwise forwarding TCP packet data within a network by nodes such as routing nodes and switching nodes[[.]]; [[S]]such network nodes may include one or more connection endpoints for one or more respective TCP connections. It should be understood that the term "host" refers to a role played by a device in a network. First node **602** and/or second node **604** may play the role of a host in a TCP connection and/or may be proxy nodes.

Please replace paragraph numbered 0074 in the previously presented specification and numbered 0076 in the specification as currently amended with the following:

[0076] In an aspect, when connection state component **568** and/or ITP policy component **552** determine an ITP header should be included in a TCP packet based on received idle information, packet generator component **554** may include the ITP header in a next TCP packet to send to first node **602** in response to data received via application in-port component **522**. In another aspect, packet generator component **554** may send the ITP header in a TCP packet in the TCP connection with no data included in the TCP data stream sent by second node **604** to first node **602**. Such a packet is referred to as an empty TCP packet for purposes of this disclosure. Packet generator component **554** may send the empty TCP packet when TCP layer component **506** has no [[for]]data from an application in second node **604** to send in the TCP data stream to first node **602**.

Please replace paragraph numbered 0104 in the previously presented specification and numbered 0106 in the specification as currently amended with the following:

[0106] In one aspect, lack <u>of</u> acknowledgment for an empty packet does not delay detection of an idle time period, while in another aspect detection is not initiated while an empty packet remains unacknowledged. ITP policy component **552** may include a policy with a rule indicating that an idle time period cannot begin while a TCP packet sent by first node **602** remains unacknowledged by second node **604**. ITP policy component **552** may prevent ITP monitor component **566** from initiating detection of an idle time period while unacknowledged data exists. In a further aspect, a time duration may be associated and/or included in the policy identifying a limit to a period of waiting to receive acknowledgment of TCP packet data sent by first node **602**.

REMARKS:

Status Summary

Claims 1-25 are pending in the present application, of which claims 1, 15, and 22-25 are presented in independent form. Claims 1-25 stand rejected. No new claims are added by this response. No claims are currently amended.

Amendments to the Specification

Paragraphs 0001 and 0002 are added to identify two applications that the applicant believes are related. The two applications were filed after the filing of the present application.

The amendment to paragraph 0065 (as numbered in the currently amended specification) corrects an incomplete sentence. The amendment is supported by the original paragraph numbered 0063 in the original specification.

The remainder of the amendments to the specifications correct punctuation, grammar, and spelling errors discovered in the applicant's review of the present application after receiving the present office action.

Claim Rejection(s) - 35 U.S.C. § 102

Claims 1-25 stand rejected under 35 U.S.C. 102 (b) as being anticipated by Sillasto, et al. (U.S. Pat. Pub. No. 2005/0063304) hereinafter referred to a Sillasto. This ground of rejection is respectfully traversed.

Sillasto relates to setting and clearing of inactivity timers utilized in managing physical and link layer resources included in exchanging data between a wireless transceiver and a wireless base station, such as a WCDMA network. (Sillasto abstract, paragraphs 0007, 0010, 0109-0112, and Fig. 12.). A physical link (network layer 1 in the OSI model) and a logical link (network layer 2 in the OSI model) enable data to be transmitted between two nodes, while network layer 3 in the OSI model (e.g. the Internet Protocol (IP)) utilizes multiple physical and logical links to transport data across multiple links and even multiple networks. The transmission control protocol (the TCP) is a transport layer protocol (layer 4 of the OSI model) provides endpoints for applications to

communicate (as well as providing additional services over and above the IP protocol). Sillasto describes utilizing information from higher layer protocols (e.g. TCP and HTTP - see for example Sillasto paragraphs 0012, 0030-0034; and Fig. 9-10) in determining when to clear/set timers and to determine timer durations for inactivity timers that detect periods of inactivity at the link layer in order to more efficiently manage physical and link layer resources.

Regarding claim 1, applicant respectfully disagrees with the Examiner and submits that Sillasto does not describe, teach, or suggest at least the feature of claim 1 of "identifying a first idle time period header, in the first packet, *for detecting a first idle time period during which no TCP packet including data in a first TCP data stream sent in the TCP connection from the second node is received by the first node*" (italics added, explained below). Applicant further respectfully submits that nowhere does Sillasto describe, teach, or suggest deactivating a TCP connection much less the feature of claim 1 of "deactivating the TCP connection in response to detecting the first idle time period".

Applicant first addresses the evidence cited the Examiner, and then applicant addresses the teachings of Sillasto in their entirety.

With respect to the feature of claim 1 of "identifying a first idle time period header, in the first packet, for detecting a first idle time period during which no TCP packet including data in a first TCP data stream sent in the TCP connection from the second node is received by the first node", the Examiner cites Sillasto Figs. 4-5 and paragraphs 0040 and 0052. Sillasto paragraph 0040 (quoted below for the Examiner's convenience) is included in a description of Fig. 2 which Sillasto states, "illustrates an example where the inactivity timer is set to an initial value if a new session (i.e. TCP connection) is initiated when the inactivity timer is running". Sillasto's stated objective is to prevent the inactivity timer value from being set too high when a small TCP packet is received. Sillasto teaches that the reception of a small packet does not always signal a new session. "These messages may, without a proper reason, set the inactivity timer value to a high value, and the reservation of resources would be unnecessary, even if the whole transmission would be over" (Sillasto paragraph 0036). As a result, Sillasto teaches a method for "…distinguishing of the previous sessions' TCP release messages from the new TCP sessions setup" (Sillasto paragraph 0036). Detecting packets that end and beginning of TCP sessions affects timer lengths and the setting and clearing of timers at the link layer, as taught by Sillasto.

Nowhere does Sillasto indicate any interest in "identifying a first idle time period header, in the first packet, for detecting a first idle time period during which no TCP packet including data in a first TCP data stream sent in the TCP connection from the second node is received by the first node" in paragraph 0040 nor in the description relating to Fig. 2 in which paragraph 0040 is included. Applicant submits that the meaning of "The inactivity timer value may be changed for a new TCP session" when read in context is clear. The inactivity timer is for detecting link layer inactivity and is changed in response to detecting activity of a higher layer protocol (e.g. TCP, HTTP). Applicant respectfully submits, that there is no evidence that it is properly interpreted as relating to an inactivity timer that is for any particular TCP connection, much less for the recited feature.

> [0040] d) If the incoming packet has a SYN flag on in the TCP header, the inactivity timer is cleared, and the allocation may continue. If the UL messages are monitored, and the SYN flag in the TCP header is detected, this triggers the clearance of the inactivity timer. Also the DL inactivity timer can be cleared when a SYN flag is detected in UL direction, and vice versa. The inactivity timer value may be changed for a new TCP session.

Sillasto paragraph 0052 (quoted below for the Examiner's convenience) is included in a description of Fig. 4 (also cited by the Examiner).Sillasto states that FIG. 4 represents a traffic flow when a conventional inactivity timer is implemented and the user happens to download a web page using a TCP connection during this time interval (Sillasto paragraph 0043). Sillasto states that the conventional inactivity timer is only efficient when one TCP connection is considered (Sillasto paragraph 0052). Sillasto's teachings address management of the link layer inactivity timer when there are consecutive TCP connections (see paragraph 0052). The applicant does not understand how this in any way teaches or relates to , "identifying a first idle time period header, in the first packet, for detecting a first idle time period during which no TCP packet including data in a first TCP data stream sent in the TCP connection from the second node is received by the first node" as recited in claim 1. Applicant respectfully requests clarification from the Examiner, should the Examiner maintain the current rejection.

> [0052] 48. The inactivity timer is conventionally cancelled. In some cases, a small (probably 40-60 bytes) packet would not cancel the inactivity timer. This would be efficient only when one TCP connection is considered. If there are consecutive TCP connections, the setup of a new TCP connection would not trigger the cancellation of the

> inactivity timer. This message has a FIN flag, and it is one of the ending messages of a TCP connection. Each side of the TCP connection ends one direction of the TCP connection, so there is a FIN message in uplink and one in downlink directions.

With respect to FIG. 5, cited by the Examiner, Sillasto states that FIG. 5 represents a traffic flow when an inactivity timer is implemented with a FIN flag notification and the user happens to download a web page using a TCP connection during this time interval (Sillasto paragraph 0057). Sillasto describes turning an inactivity on in response to detecting that a MAC layer buffer is empty (not a TCP layer buffer). Cancelling the timer when new data arrives and setting a new inactivity timer. Cancelling the active timer when more data arrives and setting a yet another new inactivity timer. Sillasto says nothing about anything in a TCP header (paragraphs 0058-0065).

In paragraph 0066, Sillasto does describe detecting a FIN flag in a TCP header. A FIN flag is defined by the TCP to indicate to a receiving TCP endpoint that the partner endpoint is closing the connection. Sillasto teaches that the inactivity timer should not be reset when a FIN flag is detected, because it indicates the connection is closed by the TCP layer.

In paragraph 0068 Sillasto describes the expiration of the inactivity timer. Applicant notes that the TCP connection is already closed, so the expiration of the inactivity timer can indicate nothing about the TCP connection, since it no longer exists.

Paragraph 0069 describes how a FIN flag in a TCP header sent (as opposed to received) affects the timers. Again, a FIN flag is sent in a TCP header to tell the partner endpoint that the connection is closed. Therefore there is no connection for identifying a first idle time period header, in the first packet, for detecting a first idle time period during which no TCP packet including data in a first TCP data stream sent in the TCP connection from the second node is received by the first node.

Examiner also cites Sillasto FIGs. 4-5 and paragraphs 0040 and 0052 as teaching deactivating the TCP connection in response to detecting the first idle time period. Applicant respectfully submits that Sillasto clearly teaches managing the inactivity timer in response to a TCP connection. Sillasto nowhere describes managing a TCP connection in response to any inactivity timer period, which clearly are for managing physical and link layer resources. Applicant respectfully submits that *the chain of causality is the opposite* of what is needed to teach deactivating a TCP connection as recited in claim 1. Any resources released as a result of a timer expiration in Sillasto would logically be released as a result of a TCP connection closing, not to

close or otherwise deactivate a TCP connection. Sillasto paragraph 0010 states, "When an inactivity timer expires, *radio bearer resources are released*" (emphasis added). Applicant respectfully submits that the inactivity timer indicates any TCP connections no longer exist as each and every example in Sillasto makes clear.

FIGs. 2, 4, and 5 and their associated descriptions in Sillasto are described above. Sillasto FIG. 1 relates to the effect of TCP/HTTP connection establishment on management of a Sillasto inactivity timer (*not the other way around*) (Sillasto paragraphs 0030-0034).

FIG. 3 relates to the effect the arrival of large TCP packet on a Sillasto inactivity timer (Sillasto paragraphs 0041). FIG. 6-8 describe the effect of multiple TCP/HTTP connections on management of a Sillasto inactivity timer (Sillasto paragraphs 0070-0084). Nowhere are the particular recited features of claim 1 described, taught, suggested, or otherwise made obvious.

FIG. 9 describes management of a Sillasto inactivity time during an active and ongoing TCP connection. There is no discussion of an idle period for the connection or an inactivity period at the link or physical layers (Sillasto paragraphs 0085-0089).

FIGs. 10-11 describe management of a Sillasto inactivity timer that involves ignoring acknowledgements (Sillasto paragraphs 0090-0108).

FIG. 12 illustrates the components of Sillasto system are clearly physical and link layer components. Applicant respectfully submits that there is no TCP component illustrated or described (Sillasto paragraphs 0109-0120).

The entirety of Sillasto describes managing inactivity timers for the physical and link layers in response to activity of non-real time protocols, such as TCP. Sillasto paragraph 0031 makes this clear in reciting, "Transport protocol is a very important piece of information for the inactivity timer value decision. Without it, it is difficult to make accurate value allocation for the inactivity timer. If the application is known, it helps in the decision making. The knowledge of the transport protocol and/or application used can e.g. be acquired by determining the port number used."

Further, Sillasto makes clear that deactivating a TCP connection is not the purpose of the inactivity timers described. Sillasto in paragraph 0005 says, "…users that have been allowed to the mobile communication network should have some service, e.g. guaranteed service". As a result it is hard to determine when to release resources at the link and physical layer (paragraph 0006) and warns against releasing resources "too soon…between packets" (paragraph 0008).

Paragraphs 00030 and 0035 describe a channel release as not desirable when a TCP connection is opening.

In light of the foregoing, applicant submits that Sillasto does not teach all of the features of claim 1. Claims 2-15 depend from claim 1 and are believed to be allowable for at least the same reasons.

Regarding claim 3, applicant respectfully submits that none of the TCP headers identified in Sillasto (i.e. FIN, SYN, etc.) identifies a duration, a generator for determining a duration, nor an input for determining a duration as described in Sillasto. Applicant requests the Examiner to point-out with particularity where Sillasto teaches otherwise, should the Examiner disagree.

In light of the foregoing, applicant submits that claim 3 is allowable for at least the reason(s) described.

Regarding claim 5, applicant has described the teachings of Sillasto above with respect to Sillasto Figs. 4, 5; paragraphs 40, 52 cited by the Examiner as teaching claim 5. Applicant fails to see any teaching in Sillasto that describes, teaches, or suggests detecting the first idle time period includes detecting a time period, in the first idle time period, during which the first node has received acknowledgment for all data in a second TCP data stream sent in the TCP connection to the second node. Applicant submits that nowhere does Sillasto describe, teach, or suggest claim 5.

In light of the foregoing, applicant submits that claim 5 is allowable for at least the reason(s) described.

Regarding claim 7, applicant sees no mention of a TCP keep-alive packet anywhere in Sillasto. Sillasto mentions empty MAC layer buffers. An empty MAC layer buffer indicates that there is no TCP packet. Applicant respectfully submits, that if there is no TCP packet there can be no TCP keep-alive packet.

In light of the foregoing, applicant submits that claim 7 is allowable for at least the reason(s) described. Claim 8 depends upon claim 7 and is believed to be allowable for at least the same reasons.

Regarding claim 9, applicant sees no mention of an empty TCP packet anywhere in Sillasto. Sillasto mentions empty MAC layer buffers. Applicant respectfully submits that an empty MAC layer buffer indicates that there is no TCP packet (and, hence, no empty TCP packet).

In light of the foregoing, applicant submits that claim 9 is allowable for at least the reason(s) described. Claim 10 depends upon claim 9 and is believed to be allowable for at least the same reasons.

The Examiner sates that with respect to claims 15 -25, the rejection of claims 1 -14 under 35 USC 102(b) (paragraphs 1.1 -1.14 above) applies fully. Applicant respectfully submits that claim 15 is allowable for at least the same reasons as described by the applicant for claim 1. Claims 16-21 depend upon claim 15 and are believed to be allowable for at least the same reasons.

Claims 22 and 24 are analogous to claim 1 and are believed to allowable for at least the same reasons as claim 1.

Claims 23 and 25 are analogous to claim 15 and are believed to allowable for at least the same reasons as claim 15

For at least the above reasons, the applicant respectfully requests that the rejections for claims 1-25 under 35 U.S.C. §102 be withdrawn.

CONCLUSION

In view of the above, it is respectfully submitted that the present application is now in proper condition for allowance, and an early notice to such effect is earnestly solicited. The Examiner is respectfully requested to telephone the undersigned inventor at the below-listed number if, after reviewing the above Remarks, the Examiner believes outstanding matters remain that may be resolved without the issuance of a subsequent Official Action.

DEPOSIT ACCOUNT

The Commissioner is hereby authorized to charge any additional fees, or credit any overpayment, associated with the filing of this paper to Deposit Account No. **50-5171**

Respectfully submitted,

/Robert Paul Morris/

Robert Paul Morris

Applicant/Inventor

Date: June 2, 2013

Customer No: 92924
712 Latta St.
Raleigh, North Carolina 27607
919.828.1792
paul.morris@nc.rr.com

Electronic Acknowledgement Receipt

EFS ID:	15925890
Application Number:	12714063
International Application Number:	
Confirmation Number:	5929
Title of Invention:	METHODS, SYSTEMS, AND COMPUTER PROGRAM PRODUCTS FOR DETECTING AN IDLE TCP CONNECTION
First Named Inventor/Applicant Name:	Robert Paul Morris
Customer Number:	92924
Filer:	Robert Paul Morris
Filer Authorized By:	
Attorney Docket Number:	0110-SP
Receipt Date:	02-JUN-2013
Filing Date:	26-FEB-2010
Time Stamp:	15:22:34
Application Type:	Utility under 35 USC 111(a)

Payment information:

Submitted with Payment	no

File Listing:

Document Number	Document Description	File Name	File Size(Bytes)/ Message Digest	Multi Part /.zip	Pages (if appl.)
1	Fee Worksheet (SB06)	0110-OA-NF-2-FeeWrkSheet-sb0006.pdf	162309 735c205339f8ef36ffc7511f8d04633151ccff8a	no	2

Warnings:

Information:

2		0110-OA-NF-2-Resp.pdf	223828 9ea1c7c9124daaae8e7ad1507690a63da84fcc42	yes	11

Multipart Description/PDF files in .zip description		
Document Description	**Start**	**End**
Amendment/Req. Reconsideration-After Non-Final Reject	1	1
Specification	2	3
Applicant Arguments/Remarks Made in an Amendment	4	11

Warnings:

Information:

Total Files Size (in bytes):	386137

This Acknowledgement Receipt evidences receipt on the noted date by the USPTO of the indicated documents, characterized by the applicant, and including page counts, where applicable. It serves as evidence of receipt similar to a Post Card, as described in MPEP 503.

New Applications Under 35 U.S.C. 111
If a new application is being filed and the application includes the necessary components for a filing date (see 37 CFR 1.53(b)-(d) and MPEP 506), a Filing Receipt (37 CFR 1.54) will be issued in due course and the date shown on this Acknowledgement Receipt will establish the filing date of the application.

National Stage of an International Application under 35 U.S.C. 371
If a timely submission to enter the national stage of an international application is compliant with the conditions of 35 U.S.C. 371 and other applicable requirements a Form PCT/DO/EO/903 indicating acceptance of the application as a national stage submission under 35 U.S.C. 371 will be issued in addition to the Filing Receipt, in due course.

New International Application Filed with the USPTO as a Receiving Office
If a new international application is being filed and the international application includes the necessary components for an international filing date (see PCT Article 11 and MPEP 1810), a Notification of the International Application Number and of the International Filing Date (Form PCT/RO/105) will be issued in due course, subject to prescriptions concerning national security, and the date shown on this Acknowledgement Receipt will establish the international filing date of the application.

Doc Code: WFEE
Document Description: Fee Worksheet (PTO-875)

PTO/SB/06 (09-11)
Approved for use through 01/31/2014. OMB 0651-0032
U.S. Patent and Trademark Office; U.S. DEPARTMENT OF COMMERCE
Under the Paperwork Reduction Act of 1995, no persons are required to respond to a collection of information unless it displays a valid OMB control number.

PATENT APPLICATION FEE DETERMINATION RECORD
Substitute for Form PTO-875

Application or Docket Number
12714063

APPLICATION AS FILED – PART I

FOR	(Column 1) NUMBER FILED	(Column 2) NUMBER EXTRA	SMALL ENTITY RATE ($)	SMALL ENTITY FEE ($)	OR	OTHER THAN SMALL ENTITY RATE ($)	OTHER THAN SMALL ENTITY FEE ($)
BASIC FEE (37 CFR 1.16(a), (b), or (c))	N/A	N/A	N/A			N/A	
SEARCH FEE (37 CFR 1.16(k), (i), or (m))	N/A	N/A	N/A			N/A	
EXAMINATION FEE (37 CFR 1.16(o), (p), or (q))	N/A	N/A	N/A			N/A	
TOTAL CLAIMS (37 CFR 1.16(i))	minus 20 =	*	X =		OR	X =	
INDEPENDENT CLAIMS (37 CFR 1.16(h))	minus 3 =	*	X =			X =	
APPLICATION SIZE FEE (37 CFR 1.16(s))	If the specification and drawings exceed 100 sheets of paper, the application size fee due is $310 ($155 for small entity) for each additional 50 sheets or fraction thereof. See 35 U.S.C. 41(a)(1)(G) and 37 CFR 1.16(s).						
MULTIPLE DEPENDENT CLAIM PRESENT (37 CFR 1.16(j))			N/A			N/A	
* If the difference in column 1 is less than zero, enter "0" in column 2.			TOTAL			TOTAL	

APPLICATION AS AMENDED – PART II

AMENDMENTA

	(Column 1) CLAIMS REMAINING AFTER AMENDMENT		(Column 2) HIGHEST NUMBER PREVIOUSLY PAID FOR	(Column 3) PRESENT EXTRA	SMALL ENTITY RATE ($)	SMALL ENTITY ADDI-TIONAL FEE ($)	OR	OTHER THAN SMALL ENTITY RATE ($)	OTHER THAN SMALL ENTITY ADDI-TIONAL FEE ($)
Total (37 CFR 1.16(i))	* 25	Minus	** 25	= 0	X 30 =	0	OR	X =	
Independent (37 CFR 1.16(h))	* 6	Minus	*** 6	= 0	X 125 =	0	OR	X =	
Application Size Fee (37 CFR 1.16(s))									
FIRST PRESENTATION OF MULTIPLE DEPENDENT CLAIM (37 CFR 1.16(j))					N/A		OR	N/A	
					TOTAL ADD'L FEE	0	OR	TOTAL ADD'L FEE	

AMENDMENTB

	(Column 1) CLAIMS REMAINING AFTER AMENDMENT		(Column 2) HIGHEST NUMBER PREVIOUSLY PAID FOR	(Column 3) PRESENT EXTRA	RATE ($)	ADDI-TIONAL FEE ($)	OR	RATE ($)	ADDI-TIONAL FEE ($)
Total (37 CFR 1.16(i))	* 25	Minus	** 25	= 0	X 40 =	0	OR	X =	
Independent (37 CFR 1.16(h))	* 6	Minus	*** 6	= 0	X 210 =	0	OR	X =	
Application Size Fee (37 CFR 1.16(s))									
FIRST PRESENTATION OF MULTIPLE DEPENDENT CLAIM (37 CFR 1.16(j))					N/A		OR	N/A	
					TOTAL ADD'L FEE	0	OR	TOTAL ADD'L FEE	

* If the entry in column 1 is less than the entry in column 2, write "0" in column 3.
** If the "Highest Number Previously Paid For" IN THIS SPACE is less than 20, enter "20".
*** If the "Highest Number Previously Paid For" IN THIS SPACE is less than 3, enter "3".
The "Highest Number Previously Paid For" (Total or Independent) is the highest number found in the appropriate box in column 1.

This collection of information is required by 37 CFR 1.16. The information is required to obtain or retain a benefit by the public which is to file (and by the USPTO to process) an application. Confidentiality is governed by 35 U.S.C. 122 and 37 CFR 1.14. This collection is estimated to take 12 minutes to complete, including gathering, preparing, and submitting the completed application form to the USPTO. Time will vary depending upon the individual case. Any comments on the amount of time you require to complete this form and/or suggestions for reducing this burden, should be sent to the Chief Information Officer, U.S. Patent and Trademark Office, U.S. Department of Commerce, P.O. Box 1450, Alexandria, VA 22313-1450. DO NOT SEND FEES OR COMPLETED FORMS TO THIS ADDRESS. **SEND TO: Commissioner for Patents, P.O. Box 1450, Alexandria, VA 22313-1450.**

If you need assistance in completing the form, call 1-800-PTO-9199 and select option 2.

Privacy Act Statement

The Privacy Act of 1974 (P.L. 93-579) requires that you be given certain information in connection with your submission of the attached form related to a patent application or patent. Accordingly, pursuant to the requirements of the Act, please be advised that: (1) the general authority for the collection of this information is 35 U.S.C. 2(b)(2); (2) furnishing of the information solicited is voluntary; and (3) the principal purpose for which the information is used by the U.S. Patent and Trademark Office is to process and/or examine your submission related to a patent application or patent. If you do not furnish the requested information, the U.S. Patent and Trademark Office may not be able to process and/or examine your submission, which may result in termination of proceedings or abandonment of the application or expiration of the patent.

The information provided by you in this form will be subject to the following routine uses:

1. The information on this form will be treated confidentially to the extent allowed under the Freedom of Information Act (5 U.S.C. 552) and the Privacy Act (5 U.S.C 552a). Records from this system of records may be disclosed to the Department of Justice to determine whether disclosure of these records is required by the Freedom of Information Act.
2. A record from this system of records may be disclosed, as a routine use, in the course of presenting evidence to a court, magistrate, or administrative tribunal, including disclosures to opposing counsel in the course of settlement negotiations.
3. A record in this system of records may be disclosed, as a routine use, to a Member of Congress submitting a request involving an individual, to whom the record pertains, when the individual has requested assistance from the Member with respect to the subject matter of the record.
4. A record in this system of records may be disclosed, as a routine use, to a contractor of the Agency having need for the information in order to perform a contract. Recipients of information shall be required to comply with the requirements of the Privacy Act of 1974, as amended, pursuant to 5 U.S.C. 552a(m).
5. A record related to an International Application filed under the Patent Cooperation Treaty in this system of records may be disclosed, as a routine use, to the International Bureau of the World Intellectual Property Organization, pursuant to the Patent Cooperation Treaty.
6. A record in this system of records may be disclosed, as a routine use, to another federal agency for purposes of National Security review (35 U.S.C. 181) and for review pursuant to the Atomic Energy Act (42 U.S.C. 218(c)).
7. A record from this system of records may be disclosed, as a routine use, to the Administrator, General Services, or his/her designee, during an inspection of records conducted by GSA as part of that agency's responsibility to recommend improvements in records management practices and programs, under authority of 44 U.S.C. 2904 and 2906. Such disclosure shall be made in accordance with the GSA regulations governing inspection of records for this purpose, and any other relevant (i.e., GSA or Commerce) directive. Such disclosure shall not be used to make determinations about individuals.
8. A record from this system of records may be disclosed, as a routine use, to the public after either publication of the application pursuant to 35 U.S.C. 122(b) or issuance of a patent pursuant to 35 U.S.C. 151. Further, a record may be disclosed, subject to the limitations of 37 CFR 1.14, as a routine use, to the public if the record was filed in an application which became abandoned or in which the proceedings were terminated and which application is referenced by either a published application, an application open to public inspection or an issued patent.
9. A record from this system of records may be disclosed, as a routine use, to a Federal, State, or local law enforcement agency, if the USPTO becomes aware of a violation or potential violation of law or regulation.

PTO/SB/06 (09-11)
Approved for use through 1/31/2014. OMB 0651-0032
U.S. Patent and Trademark Office; U.S. DEPARTMENT OF COMMERCE
Under the Paperwork Reduction Act of 1995, no persons are required to respond to a collection of information unless it displays a valid OMB control number.

PATENT APPLICATION FEE DETERMINATION RECORD Substitute for Form PTO-875	Application or Docket Number 12/714,063	Filing Date 02/26/2010	☐ To be Mailed

ENTITY: ☐ LARGE ☒ SMALL ☐ MICRO

APPLICATION AS FILED – PART I

FOR	(Column 1) NUMBER FILED	(Column 2) NUMBER EXTRA	RATE ($)	FEE ($)
☐ BASIC FEE (37 CFR 1.16(a), (b), or (c))	N/A	N/A	N/A	
☐ SEARCH FEE (37 CFR 1.16(k), (i), or (m))	N/A	N/A	N/A	
☐ EXAMINATION FEE (37 CFR 1.16(o), (p), or (q))	N/A	N/A	N/A	
TOTAL CLAIMS (37 CFR 1.16(i))	minus 20 =	*	X $ =	
INDEPENDENT CLAIMS (37 CFR 1.16(h))	minus 3 =	*	X $ =	
☐ APPLICATION SIZE FEE (37 CFR 1.16(s))	If the specification and drawings exceed 100 sheets of paper, the application size fee due is $310 ($155 for small entity) for each additional 50 sheets or fraction thereof. See 35 U.S.C. 41(a)(1)(G) and 37 CFR 1.16(s).			
☐ MULTIPLE DEPENDENT CLAIM PRESENT (37 CFR 1.16(j))				
* If the difference in column 1 is less than zero, enter "0" in column 2.			TOTAL	

APPLICATION AS AMENDED – PART II

AMENDMENT	06/02/2013	(Column 1) CLAIMS REMAINING AFTER AMENDMENT		(Column 2) HIGHEST NUMBER PREVIOUSLY PAID FOR	(Column 3) PRESENT EXTRA	RATE ($)	ADDITIONAL FEE ($)
	Total (37 CFR 1.16(i))	* 25	Minus	** 25	= 0	X $40 =	0
	Independent (37 CFR 1.16(h))	* 6	Minus	***6	= 0	X $210 =	0
	☐ Application Size Fee (37 CFR 1.16(s))						
	☐ FIRST PRESENTATION OF MULTIPLE DEPENDENT CLAIM (37 CFR 1.16(j))						
						TOTAL ADD'L FEE	**0**

AMENDMENT		(Column 1) CLAIMS REMAINING AFTER AMENDMENT		(Column 2) HIGHEST NUMBER PREVIOUSLY PAID FOR	(Column 3) PRESENT EXTRA	RATE ($)	ADDITIONAL FEE ($)
	Total (37 CFR 1.16(i))	*	Minus	**	=	X $ =	
	Independent (37 CFR 1.16(h))	*	Minus	***	=	X $ =	
	☐ Application Size Fee (37 CFR 1.16(s))						
	☐ FIRST PRESENTATION OF MULTIPLE DEPENDENT CLAIM (37 CFR 1.16(j))						
						TOTAL ADD'L FEE	

* If the entry in column 1 is less than the entry in column 2, write "0" in column 3.
** If the "Highest Number Previously Paid For" IN THIS SPACE is less than 20, enter "20".
*** If the "Highest Number Previously Paid For" IN THIS SPACE is less than 3, enter "3".
The "Highest Number Previously Paid For" (Total or Independent) is the highest number found in the appropriate box in column 1.

LIE
/ROSALIND BALL/

This collection of information is required by 37 CFR 1.16. The information is required to obtain or retain a benefit by the public which is to file (and by the USPTO to process) an application. Confidentiality is governed by 35 U.S.C. 122 and 37 CFR 1.14. This collection is estimated to take 12 minutes to complete, including gathering, preparing, and submitting the completed application form to the USPTO. Time will vary depending upon the individual case. Any comments on the amount of time you require to complete this form and/or suggestions for reducing this burden, should be sent to the Chief Information Officer, U.S. Patent and Trademark Office, U.S. Department of Commerce, P.O. Box 1450, Alexandria, VA 22313-1450. DO NOT SEND FEES OR COMPLETED FORMS TO THIS ADDRESS. **SEND TO: Commissioner for Patents, P.O. Box 1450, Alexandria, VA 22313-1450.**
If you need assistance in completing the form, call 1-800-PTO-9199 and select option 2.

UNITED STATES PATENT AND TRADEMARK OFFICE

UNITED STATES DEPARTMENT OF COMMERCE
United States Patent and Trademark Office
Address: COMMISSIONER FOR PATENTS
P.O. Box 1450
Alexandria, Virginia 22313-1450
www.uspto.gov

APPLICATION NO.	FILING DATE	FIRST NAMED INVENTOR	ATTORNEY DOCKET NO.	CONFIRMATION NO.
12/714,063	02/26/2010	Robert Paul Morris	0110	5929

92924 7590 03/04/2013
Small Pond Associates, LLC
Robert Paul Morris
712 Latta Street
Raleigh, NC 27607

EXAMINER
COULTER, KENNETH R

ART UNIT	PAPER NUMBER
2445	

NOTIFICATION DATE	DELIVERY MODE
03/04/2013	ELECTRONIC

Please find below and/or attached an Office communication concerning this application or proceeding.

The time period for reply, if any, is set in the attached communication.

Notice of the Office communication was sent electronically on above-indicated "Notification Date" to the following e-mail address(es):

paul.morris@nc.rr.com
rpmorris@yahoo.com

Office Action Summary	Application No.	Applicant(s)	
	12/714,063	Robert Paul Morris	
	Examiner	Art Unit	
	Kenneth Coulter	2445	

-- The MAILING DATE of this communication appears on the cover sheet with the correspondence address --

Period for Reply

A SHORTENED STATUTORY PERIOD FOR REPLY IS SET TO EXPIRE 3 MONTH(S) OR THIRTY (30) DAYS, WHICHEVER IS LONGER, FROM THE MAILING DATE OF THIS COMMUNICATION.

- Extensions of time may be available under the provisions of 37 CFR 1.136(a). In no event, however, may a reply be timely filed after SIX (6) MONTHS from the mailing date of this communication.
- If NO period for reply is specified above, the maximum statutory period will apply and will expire SIX (6) MONTHS from the mailing date of this communication.
- Failure to reply within the set or extended period for reply will, by statute, cause the application to become ABANDONED (35 U.S.C. § 133). Any reply received by the Office later than three months after the mailing date of this communication, even if timely filed, may reduce any earned patent term adjustment. See 37 CFR 1.704(b).

Status

1)☒ Responsive to communication(s) filed on *18 September 2012*.

2a)☐ This action is **FINAL**. 2b)☒ This action is non-final.

3)☐ An election was made by the applicant in response to a restriction requirement set forth during the interview on _____; the restriction requirement and election have been incorporated into this action.

4)☐ Since this application is in condition for allowance except for formal matters, prosecution as to the merits is closed in accordance with the practice under *Ex parte Quayle*, 1935 C.D. 11, 453 O.G. 213.

Disposition of Claims

5)☒ Claim(s) *1-25* is/are pending in the application.

5a) Of the above claim(s) _____ is/are withdrawn from consideration.

6)☐ Claim(s) _____ is/are allowed.

7)☒ Claim(s) *1-25* is/are rejected.

8)☐ Claim(s) _____ is/are objected to.

9)☐ Claim(s) _____ are subject to restriction and/or election requirement.

* If any claims have been determined allowable, you may be eligible to benefit from the **Patent Prosecution Highway** program at a participating intellectual property office for the corresponding application. For more information, please see http://www.uspto.gov/patents/init_events/pph/index.jsp or send an inquiry to PPHfeedback@uspto.gov.

Application Papers

10)☐ The specification is objected to by the Examiner.

11)☐ The drawing(s) filed on _____ is/are: a)☐ accepted or b)☐ objected to by the Examiner.

Applicant may not request that any objection to the drawing(s) be held in abeyance. See 37 CFR 1.85(a).

Replacement drawing sheet(s) including the correction is required if the drawing(s) is objected to. See 37 CFR 1.121(d).

Priority under 35 U.S.C. § 119

12)☐ Acknowledgment is made of a claim for foreign priority under 35 U.S.C. § 119(a)-(d) or (f).

a)☐ All b)☐ Some * c)☐ None of:

1.☐ Certified copies of the priority documents have been received.

2.☐ Certified copies of the priority documents have been received in Application No. _____.

3.☐ Copies of the certified copies of the priority documents have been received in this National Stage application from the International Bureau (PCT Rule 17.2(a)).

* See the attached detailed Office action for a list of the certified copies not received.

Attachment(s)

1) ☒ Notice of References Cited (PTO-892)

2) ☐ Information Disclosure Statement(s) (PTO/SB/08) Paper No(s)/Mail Date _____.

3) ☐ Interview Summary (PTO-413) Paper No(s)/Mail Date. _____ .

4) ☐ Other: _____.

DETAILED ACTION

Claim Rejections - 35 USC § 102

The following is a quotation of the appropriate paragraphs of 35 U.S.C. 102 that form the basis for the rejections under this section made in this Office action:

> A person shall be entitled to a patent unless –
>
> (b) the invention was patented or described in a printed publication in this or a foreign country or in public use or on sale in this country, more than one year prior to the date of application for patent in the United States.

Claims 1 – 25 are rejected under 35 U.S.C. 102(b) as being anticipated by Sillasto et al. (U.S. Pat. Pub. No. 2005/0063304) (Release Timer for NRT Connection in Mobile Communication Network).

1.1 Regarding claim 1, Sillasto discloses a method for detecting an idle TCP connection, the method comprising:

receiving, by a first node from a second node, a first transmission control protocol (TCP) packet in a TCP connection (Figs. 4, 5; paragraphs 40, 52);

identifying a first idle time period header, in the first packet, for detecting a first idle time period during which no TCP packet including data in a first TCP data stream sent in the TCP connection from the second node is received by the first node (Figs. 4, 5; paragraphs 40, 52);

detecting the first idle time period based on the first idle time period header (Figs. 4, 5; paragraphs 40, 52); and

deactivating the TCP connection in response to detecting the first idle time period (Figs. 4, 5; paragraphs 40, 52).

1.2 Per claim 2, Sillasto teaches the method of claim 1 wherein the TCP connection is identified by a first connection endpoint and a second connection endpoint, and the first node includes at least one of the first connection endpoint and a first proxy endpoint representing the first connection endpoint (Fig. 12; paragraphs 110, 111).

1.3 Regarding claim 3, Sillasto discloses the method of claim 1 wherein the first idle time period header identifies, for detecting the first idle time period, at least one of a duration of time, a generator for determining a duration of time, and an input for determining a duration of time (Figs. 4, 5; paragraphs 40, 52).

1.4 Per claim 4, Sillasto teaches the method of claim 1 further comprising modifying at least one of a TCP keep-alive option, a TCP user timeout, a retransmission timeout, an acknowledgment timeout, and another timeout associated with the TCP connection, in response to identifying the first idle time period header (Figs. 4, 5, 6, 7; paragraphs 40, 52).

1.5 Regarding claim 5, Sillasto discloses the method of claim 1 wherein detecting the first idle time period includes detecting a time period, in the first idle time period, during which the first node has received acknowledgment for all data in a second TCP data

stream sent in the TCP connection to the second node (Figs. 4, 5; paragraphs 40, 52).

1.6 Per claim 6, Sillasto teaches the method of claim 1 wherein the first idle time period header is based on a previous idle time period header identified in a previous TCP packet in the TCP connection sent by the first node to the second node prior to the receiving of the first TCP packet (Figs. 4, 5, 6, 7; paragraphs 40, 52).

1.7 Regarding claim 7, Sillasto discloses the method of claim 1 further comprising: detecting a timeout based on a duration of time identified by the first idle information header; and sending, in response to detecting the timeout, a TCP keep-alive packet in the TCP connection to the second node (Figs. 4, 5; paragraphs 40, 52).

1.8 Per claim 8, Sillasto teaches the method of claim 7 further comprising: detecting an acknowledgment timeout associated with sending the TCP keep-alive packet; and detecting the first idle time period based on detecting the acknowledgment timeout (Figs. 4, 5; paragraphs 40, 52).

1.9 Regarding claim 9, Sillasto discloses the method of claim 1 wherein detecting the first idle time period comprises: receiving an empty TCP packet including no data in the first TCP data stream after detecting a beginning of a potential first idle time period; in response to receiving the empty TCP packet, detecting a beginning of a next potential first idle time period (Figs. 4, 5, 6, 7; paragraphs 40, 52).

1.10 Per claim 10, Sillasto teaches the method of claim 9 wherein detecting the beginning of the next potential first idle time period is performed in response to determining the empty TCP packet matches a specified condition (Figs. 4, 5; paragraphs 40, 52).

1.11 Regarding claim 11, Sillasto discloses the method of claim 1 further comprising: receiving the first TCP packet after receiving a previous TCP packet including a previous idle time period header for detecting a previous idle time period; and detecting, in response to receiving the first TCP packet, the first idle time period rather than detecting the previous idle time period (Figs. 4, 5; paragraphs 40, 52).

1.12 Per claim 12, Sillasto teaches the method of claim 1 further comprising sending a second TCP packet in the TCP connection to the second node including an informational idle time period header identifying to the second node metadata for the first idle time period (Figs. 4, 5; paragraphs 40, 52).

1.13 Regarding claim 13, Sillasto discloses the method of claim 1 further comprising sending in the TCP connection a second TCP packet including a second idle time period header for detecting a second idle time period during which no TCP packet including data in a second TCP data stream sent in the TCP connection from the first node is received by the second node (Figs. 4, 5; paragraphs 40, 52).

1.14 Per claim 14, Sillasto teaches the method of claim 1 wherein deactivating includes at least one of closing the TCP connection, sending by the first node a TCP packet including a reset indication, Figs. 4, 5; paragraphs 40, 52and releasing a resource previously allocated for the TCP connection by the first node (Figs. 4, 5; paragraphs 40, 52).

1.15 Regarding claims 15 – 25, the rejection of claims 1 – 14 under 35 USC 102(b) (paragraphs 1.1 – 1.14 above) applies fully.

Any inquiry concerning this communication or earlier communications from the examiner should be directed to Kenneth R. Coulter whose telephone number is (571)272-3879. The examiner can normally be reached on M - F, 7:30 am - 4 pm.

If attempts to reach the examiner by telephone are unsuccessful, the examiner's supervisor, Lynn Feild can be reached on 571 272-2092. The fax phone number for the organization where this application or proceeding is assigned is 571-273-8300.

Information regarding the status of an application may be obtained from the Patent Application Information Retrieval (PAIR) system. Status information for published applications may be obtained from either Private PAIR or Public PAIR. Status information for unpublished applications is available through Private PAIR only. For more information about the PAIR system, see http://pair-direct.uspto.gov. Should you have questions on access to the Private PAIR system, contact the Electronic Business Center (EBC) at 866-217-9197 (toll-free). If you would like assistance from a USPTO Customer Service Representative or access to the automated information system, call 800-786-9199 (IN USA OR CANADA) or 571-272-1000.

Kenneth Coulter
/Kenneth R Coulter/
Primary Examiner, Art Unit 2445

/KRC/

Notice of References Cited	Application/Control No. 12/714,063	Applicant(s)/Patent Under Reexamination MORRIS, ROBERT PAUL	
	Examiner Kenneth R. Coulter	Art Unit 2445	Page 1 of 1

U.S. PATENT DOCUMENTS

*		Document Number Country Code-Number-Kind Code	Date MM-YYYY	Name	Classification
*	A	US-2005/0063304 A1	03-2005	Sillasto et al.	370/229
*	B	US-8,219,606 B2	07-2012	Morris, Robert Paul	709/201
	C	US-			
	D	US-			
	E	US-			
	F	US-			
	G	US-			
	H	US-			
	I	US-			
	J	US-			
	K	US-			
	L	US-			
	M	US-			

FOREIGN PATENT DOCUMENTS

*		Document Number Country Code-Number-Kind Code	Date MM-YYYY	Country	Name	Classification
	N					
	O					
	P					
	Q					
	R					
	S					
	T					

NON-PATENT DOCUMENTS

*		Include as applicable: Author, Title Date, Publisher, Edition or Volume, Pertinent Pages)
	U	
	V	
	W	
	X	

*A copy of this reference is not being furnished with this Office action. (See MPEP § 707.05(a).)
Dates in MM-YYYY format are publication dates. Classifications may be US or foreign.

Search Notes	Application/Control No.	Applicant(s)/Patent Under Reexamination
	12714063	MORRIS, ROBERT PAUL
	Examiner	**Art Unit**
	KENNETH R COULTER	2445

CPC- SEARCHED

Symbol	Date	Examiner

CPC COMBINATION SETS - SEARCHED

Symbol	Date	Examiner

US CLASSIFICATION SEARCHED

Class	Subclass	Date	Examiner
709	227, 228, 232	2/22/2013	/KRC/
713	500	2/22/2013	/KRC/

SEARCH NOTES

Search Notes	Date	Examiner
WEST: USPT, PGPB	2/22/2013	/KRC/
searched for possible double patenting	2/22/2013	/KRC/

INTERFERENCE SEARCH

US Class/ CPC Symbol	US Subclass / CPC Group	Date	Examiner

	/KENNETH R COULTER/ Primary Examiner.Art Unit 2445

WEST Search History

Hide Items Restore Clear Close

DATE: Friday, February 22, 2013

Hide?	Set Name	Query	Hit Count
Prior Art			
		DB=PGPB,USPT; PLUR=YES; OP=ADJ	
☐	L15	l12 and l13 `Morris`	3
☐	L14	l9 and L13 `Morris`	6
☐	L13	(709/227 or 709/228 or 709/232 or 713/500).ccls.	19513
☐	L12	L11 and l3 `Morris;Sillasto'304`	5
☐	L11	(idl$ or inactiv$) near4 (TCP connection)	152
☐	L10	L9 same header `Morris`	5
☐	L9	l4 same (idl$ or inactiv$)	24
☐	L8	L7 and TCP `Morris`	7
☐	L7	l3 same L6 `Morris`	7
☐	L6	(deactiv$ or disconnect$) near4 connection	56986
☐	L5	L4 and l3 `Morris`	4
☐	L4	(deactiv$ or disconnect$) near4 (TCP connection)	290
☐	L3	(idl$ or inactiv$) near12 header	1804
☐	L2	8219606[uref]	0
☐	L1	8219606[pn] `Morris'454`	1

END OF SEARCH HISTORY

Application Number	Application/Control No.	Applicant(s)/Patent under Reexamination	
	12/714,063	MORRIS, ROBERT PAUL	

Document Code - DISQ	Internal Document – DO NOT MAIL

TERMINAL DISCLAIMER	☒ APPROVED	☐ DISAPPROVED
Date Filed : 09/18/12	This patent is subject to a Terminal Disclaimer	

Approved/Disapproved by:

Angie Walker

U.S. Patent and Trademark Office

IN THE UNITED STATES PATENT AND TRADEMARK OFFICE

In re Patent Application of:	Mail Stop: Amendment
Robert Paul Morris	T.C/Art Unit: 2445
Application No.: 12/714,063	Examiner: Coulter, Kenneth R.
Filed: 02/26/2010	Confirmation No.: 5929
For: Method, Systems, and Computer Program Products for Detecting an Idle TCP Connection	

* *

RESPONSE UNDER 37 C.F.R. §1.111

Mail Stop: Amendment
Commissioner for Patents
P.O. Box 1450
Alexandria, VA 22313-1450

Sir:

This paper is responsive to the Office Action mailed 06/21/2012, for which a shortened statutory period for reply is set to expire on 09/21/2012. Applicant thanks the examiner for a number of helpful suggestions. Entry and favorable consideration of the following Amendments and Remarks is respectfully requested.

Amendments to the Specification begin on page 2 of this paper.

Amendments to the Claims are reflected in the Listing of Claims that begins on page 4 of this paper.

Remarks begin on page 10 of this paper.

Amendments to the Specification:

Note: Amendments to the spec are strikethrough deletions and underline insertions. Only a marked up copy is required.

Please replace paragraphs 0050 with the following:

[0050] Analogously, TCP layer component **506** interprets data received from IP layer component **514** via net in-port component **562**. The data is interpreted as TCP data and TCP packets are detected in the received data by net in-port component **562** and/or packet handler component **516**. Fig. 5 illustrates TCP layer component **506** includes packet handler component **516** to strip off and/or otherwise process TCP layer specific data. Packet handler component **516** interoperates with application out-port (app out-port) component **524** to transfer data in the TCP packet included in a TCP data stream to sockets component **518**, application protocol **520**, network application **504**, and/or other components as described above associated with the local endpoint of the TCP connection. Detailed information on the operation of the TCP is included in RFC 793.

Please replace paragraphs 0076 with the following:

[0076] Fig. 8 also illustrates a format for an exemplary ITP header **820**. A KIND field **822**~~location~~ is specified for including an identifier indicating the option is an ITP header. Identifiers for option headers are currently under the control of the Internet Assigned Numbers Authority (IANA). Length field **824** identifies a length of an ITP header. An ITP data field **826** is specified for including ITP header information for detecting an idle time period as described herein. ITP data field **826**, in Fig., 8 may include and/or otherwise identify for detecting an idle time period a duration of time, a duration generator for determining a duration of time, and a parameter for use in a duration generator.

Please replace paragraph 0131 with the following:

[0131] Moreover, the methods described herein may be embodied in executable instructions stored in a non-transitory computer readable storage medium for use by or in connection with an instruction execution machine, system, apparatus, or device, such as a computer-based or processor-containing machine, system, apparatus, or device. As used herein, a " non-transitory computer readable storage medium" may include one or more of any suitable media for storing the executable instructions of a computer program in one or more of an electronic, magnetic, optical, and electromagnetic~~, and infrared~~ form, such that the instruction execution machine, system, apparatus, or device may read (or fetch) the instructions from the non-transitory computer readable storage medium and execute the instructions for carrying out the described methods. A non-exhaustive list of conventional exemplary non-transitory computer readable storage media includes a portable computer diskette; a random access memory (RAM); a read only memory (ROM); an erasable programmable read only memory (EPROM or Flash memory); optical storage devices, including a portable compact disc (CD), a portable digital video disc (DVD), a high definition DVD (HD-DVD.TM.), a Blu-ray.TM. disc; and the like.

Amendments to the Claims:

This listing of claims will replace all prior versions, and listings, of claims in the application:

1. (Original) A method for detecting an idle TCP connection, the method comprising:

receiving, by a first node from a second node, a first transmission control protocol (TCP) packet in a TCP connection;

identifying a first idle time period header, in the first packet, for detecting a first idle time period during which no TCP packet including data in a first TCP data stream sent in the TCP connection from the second node is received by the first node;

detecting the first idle time period based on the first idle time period header; and

deactivating the TCP connection in response to detecting the first idle time period.

2. (Original) The method of claim 1 wherein the TCP connection is identified by a first connection endpoint and a second connection endpoint, and the first node includes at least one of the first connection endpoint and a first proxy endpoint representing the first connection endpoint.

3. (Original) The method of claim 1 wherein the first idle time period header identifies, for detecting the first idle time period, at least one of a duration of time, a generator for determining a duration of time, and an input for determining a duration of time.

4. (Original) The method of claim 1 further comprising modifying at least one of a TCP keep-alive option, a TCP user timeout, a retransmission timeout, an acknowledgment timeout, and another timeout associated with the TCP connection, in response to identifying the first idle time period header.

5. (Original) The method of claim 1 wherein detecting the first idle time period includes detecting a time period, in the first idle time period, during which the first node has received acknowledgment for all data in a second TCP data stream sent in the TCP connection to the second node.

6. (Original) The method of claim 1 wherein the first idle time period header is based on a previous idle time period header identified in a previous TCP packet in the TCP connection sent by the first node to the second node prior to the receiving of the first TCP packet.

7. (Original) The method of claim 1 further comprising:

detecting a timeout based on a duration of time identified by the first idle information header; and

sending, in response to detecting the timeout, a TCP keep-alive packet in the TCP connection to the second node.

8. (Original) The method of claim 7 further comprising:

detecting an acknowledgment timeout associated with sending the TCP keep-alive packet; and

detecting the first idle time period based on detecting the acknowledgment timeout.

9. (Original) The method of claim 1 wherein detecting the first idle time period comprises:

receiving an empty TCP packet including no data in the first TCP data stream after detecting a beginning of a potential first idle time period;

in response to receiving the empty TCP packet, detecting a beginning of a next potential first idle time period.

10. (Original) The method of claim 9 wherein detecting the beginning of the next potential first idle time period is performed in response to determining the empty TCP packet matches a specified condition.

11. (Original) The method of claim 1 further comprising:

receiving the first TCP packet after receiving a previous TCP packet including a previous idle time period header for detecting a previous idle time period; and

detecting, in response to receiving the first TCP packet, the first idle time period rather than detecting the previous idle time period.

12. (Currently Amended) The method of claim 1 further comprising sending a second TCP packet in the TCP connection to the second node including an informational idle time period header identifying, to the second node, metadata for the first idle time period.

13. (Original) The method of claim 1 further comprising sending in the TCP connection a second TCP packet including a second idle time period header for detecting a second idle time period during which no TCP packet including data in a second TCP data stream sent in the TCP connection from the first node is received by the second node.

14. (Original) The method of claim 1 wherein deactivating includes at least one of closing the TCP connection, sending by the first node a TCP packet including a reset indication, and releasing a resource previously allocated for the TCP connection by the first node.

15. (Original) A method for detecting an idle TCP connection, the method comprising:

receiving, by a second node, first idle information for detecting when a TCP connection is idle;

generating a TCP packet including a first idle time period header based on the first idle information; and

sending the TCP packet in the TCP connection to the first node for detecting a first idle time period during which no TCP packet including data in a first data stream sent in the TCP connection from the second node is received by the first node.

16. (Original) The method of claim 15 further comprising modifying based on the first idle information at least one of a keep-alive option, a TCP user timeout, a retransmission timeout, an acknowledgment timeout, and another timeout associated with the TCP connection.

17. (Original) The method of claim 16 further comprising:

detecting a keep-alive timeout based on the modified keep-alive option;

generating, in response to detecting the keep-alive timeout, a second TCP packet including a second idle time period header for resetting the detecting of the first idle time period; and

sending the second TCP packet in the TCP connection to the first node.

18. (Original) The method of claim 15 further comprising:

receiving in the TCP connection from the first node a second TCP packet;

identifying in the second TCP packet a second idle time period header for detecting a second idle time period during which no TCP packet including data in a second TCP data stream sent in the TCP connection from the first node is received by the second node;

detecting the second idle time period based on the second idle time period header; and

deactivating the TCP connection in response to detecting the second idle time period.

19. (Original) The method of claim 18 wherein the second idle time period header is based on the first idle time period header.

20. (Original) The method of claim 18 wherein deactivating includes at least one of closing the TCP connection, sending a TCP packet including a reset indication to the first node, and releasing a resource previously allocated for the TCP connection by the second node.

21. (Original) The method of claim 20 wherein the second idle time period includes a time period during which the second node has received acknowledgment for all data in the first TCP data stream sent in the TCP connection.

22. (Currently Amended) A system for detecting an idle TCP connection, the system comprising:

an execution environment including an instruction processing unit ~~configured to process~~, wherein an instruction included in at least one of a net in-port component, an idle time period option handler component, and an idle time period monitor component is executed by the instruction processing unit;

the net in-port component configured for receiving, by a first node from a second node, a first transmission control protocol (TCP) packet in a TCP connection;

the idle time period option handler component configured for identifying a first idle time period header, in the first packet, for detecting a first idle time period during which no TCP packet including data in a first TCP data stream sent in the TCP connection from the second node is received by the first node;

the idle time period monitor component configured for detecting the first idle time period based on the first idle time period header; and

the connection state component configured for deactivating the TCP connection in response to detecting the first idle time period.

23. (Currently Amended) A system for detecting an idle TCP connection, the system comprising:

an execution environment including an instruction processing unit ~~configured to process~~, wherein an instruction included in at least one of an idle time period policy component, a packet generator component, and a net out-port component is executed by the instruction processing unit;

the idle time period policy component configured for receiving, by a second node, first idle information for detecting when a TCP connection is idle;

the packet generator component configured for generating a TCP packet including a first idle time period header based on the first idle information; and

the net out-port component configured for sending the TCP packet in the TCP connection to the first node for detecting a first idle time period during which no TCP packet including data in a first data stream sent in the TCP connection from the second node is received by the first node~~;~~.

24. (Currently Amended) A non-transitory computer readable storage medium embodying a computer program, executable by a machine, for detecting an idle TCP connection, the computer program comprising executable instructions for:

receiving, by a first node from a second node, a first transmission control protocol (TCP) packet in a TCP connection;

identifying a first idle time period header, in the first packet, for detecting a first idle time period during which no TCP packet including data in a first TCP data stream sent in the TCP connection from the second node is received by the first node;

detecting the first idle time period based on the first idle time period header; and

deactivating the TCP connection in response to detecting the first idle time period.

25. (Currently Amended) A non-transitory computer readable storage medium embodying a computer program, executable by a machine, for detecting an idle TCP connection, the computer program comprising executable instructions for:

receiving, by a second node, first idle information for detecting when a TCP connection is idle;

generating a TCP packet including a first idle time period header based on the first idle information; and

sending the TCP packet in the TCP connection to the first node for detecting a first idle time period during which no TCP packet including data in a first data stream sent in the TCP connection from the second node is received by the first node.

REMARKS:

Status Summary

Claims 1-25 are pending in the present application, of which claims 1, 15, and 22-25 are presented in independent form. Claims 1, 4,-7, 12, 14-16, 18, 19, and 22-25 stand rejected. Claims 2, 3, 8-11, 13, 17, 20, and 21 are presently objected to as being dependent upon a rejected base claim, but would be allowable if rewritten in independent form including all of the limitations of the base claim and any intervening claims.

No new claims are added by this response. Claims 12 and 22-25 are currently amended.

Amendments to the Specification

As currently amended paragraph 0076 recites "field 822" rather than "location". The amendment is supported at least by Fig. 8 and the use of the term "field" in the remainder of paragraph 0076 itself.

With respect to paragraph 0131 of the specification, as currently amended paragraph 0131 recites "a computer readable storage medium" rather than "a computer readable medium". This amendments are supported by at least the original paragraph 0131, which includes the inventor's own definition of "computer readable medium" which specifically recites that a "computer readable medium" is for *storing* executable instructions. As amended, paragraph 0131 no longer recites "infrared" as type of computer readable storage medium given that the recitation is unnecessary given the remainder of the recited forms.

The remainder of the amendments to the specifications correct punctuation, grammar, and spelling errors discovered in the applicants review of the present application after receiving the present office action.

Amendments to the Claims

Claim 12 as currently amended is supported by at least original claim 12, as the amendment merely clarifies the claim.

With respect to currently amended claims 22 and 23, the first element of each original claim 22 and 23 recited an "instruction processing unit configured to process an instruction".

Applicant is aware that "configured to" language may be interpreted as means plus function. The respective amendments to claim 22 and 23 are intended to clarify that a means plus function interpretation is unintended. The current amendments each recite "... an instruction included in at least one of a …is executed by the instruction processing unit", rather than merely reciting that the IPU is configured to process such an instruction.

Claims 24 and 25 as currently amended recite "non-transitory computer readable storage medium" rather than "computer readable medium" as in the original claims. The respective amendments to claims 24 and 25 clarify that "computer readable medium" encompasses only non-transitory storage media. The amendment is supported by at least paragraph 0131 in the original specification of the present application and as amended above.

Claim Objections

Claim 23 stands objected to because of the following informalities: improper punctuation in the last line. Claim 23 as currently amended includes an appropriate correction.

The applicant respectfully requests that the objection to claim 23 be withdrawn.

Claim Rejection(s) - 35 U.S.C. § 112

The Examiner has rejected claims 12 under 35 U.S.C. 112, second paragraph, as providing insufficient antecedent basis for the limitation "identifying to the second node metadata". Punctuation has been included in currently amended claim 12 to clarify the intended reading. Claim 12 as currently amended now recites "identifying, to the second node, metadata".

For at least the above reasons, the applicant requests that the rejection to claim 12 under 35 U.S.C. §112 paragraph 2 be withdrawn.

Double Patenting

Claims 1, 4 - 7, 14 - 16, 18, 19, and 22 - 25 stand provisionally rejected on the ground of non-statutory obviousness-type double patenting as being unpatentable over claims 11 - 15, 17, 18, and 20 of co-pending Application No. 12/714,454. The Examiner notes that, although the conflicting claims are not identical, they are not patentably distinct from each other because of the

mapping identified in the present action. The applicant has filed a terminal disclaimer along with the present response to obviate the double patenting rejection over Application No. 12/714,454, now patent 8,219,606.

Nevertheless, the Applicant respectfully disagrees, in order to preserve any rights that would otherwise might be lost. The Applicant is unable to respond to the rejection as the current action merely maps claims numbers between the present disclosure and Application No. 12/714,454. The Applicant respectfully notes that MPEP 804 II.B requires that

> Any obviousness-type double patenting rejection should make clear:
> (A) The differences between the inventions defined by the conflicting claims - a claim in the patent compared to a claim in the application; and
> (B) The reasons why a person of ordinary skill in the art would conclude that the invention defined in the claim at issue >is anticipated by, or< would have been an obvious variation of >,< the invention defined in a claim in the patent.

For at least the filing of the terminal disclaimer, the applicant requests that the double patenting rejection for claims 1, 4 - 7, 14 - 16, 18, 19, and 22 - 25 be withdrawn and believes that claims 1, 4 - 7, 14 - 16, 18, 19, and 22 – 25 are allowable. As such, claims 2, 3, 8-11, 13, 17, 20, and 21 being dependent upon now allowable claims are also thus allowable. The Applicant requests that the objections to claims 2, 3, 8-11, 13, 17, 20, and 21 be reconsidered and withdrawn.

CONCLUSION

In view of the above, it is respectfully submitted that the present application is now in proper condition for allowance, and an early notice to such effect is earnestly solicited. The Examiner is respectfully requested to telephone the undersigned inventor at the below-listed number if, after reviewing the above Remarks, the Examiner believes outstanding matters remain that may be resolved without the issuance of a subsequent Official Action.

DEPOSIT ACCOUNT

The Commissioner is hereby authorized to charge any additional fees, or credit any overpayment, associated with the filing of this paper to Deposit Account No. **50-5171**

Respectfully submitted,

/Robert Paul Morris/

Robert Paul Morris

Inventor

Date: September 18, 2012

Customer No: 92924
712 Latta St.
Raleigh, North Carolina 27607
919.828.1792
paul.morris@nc.rr.com

Electronic Patent Application Fee Transmittal

Application Number:	12714063
Filing Date:	26-Feb-2010
Title of Invention:	METHODS, SYSTEMS, AND COMPUTER PROGRAM PRODUCTS FOR DETECTING AN IDLE TCP CONNECTION
First Named Inventor/Applicant Name:	Robert Paul Morris
Filer:	Robert Paul Morris
Attorney Docket Number:	0110

Filed as Small Entity

Utility under 35 USC 111(a) Filing Fees

Description	Fee Code	Quantity	Amount	Sub-Total in USD($)
Basic Filing:				
Pages:				
Claims:				
Miscellaneous-Filing:				
Petition:				
Patent-Appeals-and-Interference:				
Post-Allowance-and-Post-Issuance:				
Extension-of-Time:				

Description	Fee Code	Quantity	Amount	Sub-Total in USD($)
Miscellaneous:				
Statutory or terminal disclaimer	2814	1	80	80
		Total in USD ($)		**80**

Electronic Acknowledgement Receipt

EFS ID:	13772978
Application Number:	12714063
International Application Number:	
Confirmation Number:	5929
Title of Invention:	METHODS, SYSTEMS, AND COMPUTER PROGRAM PRODUCTS FOR DETECTING AN IDLE TCP CONNECTION
First Named Inventor/Applicant Name:	Robert Paul Morris
Customer Number:	92924
Filer:	Robert Paul Morris
Filer Authorized By:	
Attorney Docket Number:	0110
Receipt Date:	18-SEP-2012
Filing Date:	26-FEB-2010
Time Stamp:	12:41:15
Application Type:	Utility under 35 USC 111(a)

Payment information:

Submitted with Payment	yes
Payment Type	Credit Card
Payment was successfully received in RAM	$80
RAM confirmation Number	9694
Deposit Account	505171
Authorized User	MORRIS, ROBERT PAUL

The Director of the USPTO is hereby authorized to charge indicated fees and credit any overpayment as follows:

Charge any Additional Fees required under 37 C.F.R. Section 1.17 (Patent application and reexamination processing fees)

Charge any Additional Fees required under 37 C.F.R. Section 1.19 (Document supply fees)

Charge any Additional Fees required under 37 C.F.R. Section 1.20 (Post Issuance fees)

Charge any Additional Fees required under 37 C.F.R. Section 1.21 (Miscellaneous fees and charges)

File Listing:

Document Number	Document Description	File Name	File Size(Bytes)/ Message Digest	Multi Part /.zip	Pages (if appl.)
1	Terminal Disclaimer Filed	0110-SB0025-TerminalDisclaimer-PriorPatent.pdf	373748 3583f83c971563098b48c4ca50077ed033582498	no	2
Warnings:					
Information:					
2	Fee Worksheet (SB06)	0110-FeeWrkSheet-sb0006.pdf	158528 90d3dab316371a0e6bf49b618234cfa1253a66d5	no	2
Warnings:					
Information:					
3		0110-NF-OA-Response.pdf	220463 b96f3b160725d0636203750569a70991b08a504d	yes	13

Multipart Description/PDF files in .zip description

Document Description	Start	End
Amendment/Req. Reconsideration-After Non-Final Reject	1	1
Specification	2	3
Claims	4	9
Applicant Arguments/Remarks Made in an Amendment	10	13

Warnings:					
Information:					
4	Fee Worksheet (SB06)	fee-info.pdf	29842 7779868b0fc539ec9d9c028eb0023cc491f080d6	no	2
Warnings:					
Information:					
		Total Files Size (in bytes):	782581		

This Acknowledgement Receipt evidences receipt on the noted date by the USPTO of the indicated documents, characterized by the applicant, and including page counts, where applicable. It serves as evidence of receipt similar to a Post Card, as described in MPEP 503.

New Applications Under 35 U.S.C. 111
If a new application is being filed and the application includes the necessary components for a filing date (see 37 CFR 1.53(b)-(d) and MPEP 506), a Filing Receipt (37 CFR 1.54) will be issued in due course and the date shown on this Acknowledgement Receipt will establish the filing date of the application.

National Stage of an International Application under 35 U.S.C. 371
If a timely submission to enter the national stage of an international application is compliant with the conditions of 35 U.S.C. 371 and other applicable requirements a Form PCT/DO/EO/903 indicating acceptance of the application as a national stage submission under 35 U.S.C. 371 will be issued in addition to the Filing Receipt, in due course.

New International Application Filed with the USPTO as a Receiving Office
If a new international application is being filed and the international application includes the necessary components for an international filing date (see PCT Article 11 and MPEP 1810), a Notification of the International Application Number and of the International Filing Date (Form PCT/RO/105) will be issued in due course, subject to prescriptions concerning national security, and the date shown on this Acknowledgement Receipt will establish the international filing date of the application.

PTO/SB/26 (08-11)
Approved for use through 07/31/2012. OMB 0651-0031
U.S. Patent and Trademark Office; U.S. DEPARTMENT OF COMMERCE
Under the Paperwork Reduction Act of 1995, no persons are required to respond to a collection of information unless it displays a valid OMB control number.

TERMINAL DISCLAIMER TO OBVIATE A DOUBLE PATENTING REJECTION OVER A "PRIOR" PATENT	Docket Number (Optional) 0110

In re Application of: Robert Paul Morris

Application No.: 12714063

Filed: 02/26/2010

For: Methods, Systems, and Computer Program Products for Detecting an Idle TCP Connection

The owner*, Robert Paul Morris, of 100 percent interest in the instant application hereby disclaims, except as provided below, the terminal part of the statutory term of any patent granted on the instant application which would extend beyond the expiration date of the full statutory term of **prior patent** No. 8219606 as the term of said **prior patent** is presently shortened by any terminal disclaimer. The owner hereby agrees that any patent so granted on the instant application shall be enforceable only for and during such period that it and the **prior patent** are commonly owned. This agreement runs with any patent granted on the instant application and is binding upon the grantee, its successors or assigns.

In making the above disclaimer, the owner does not disclaim the terminal part of the term of any patent granted on the instant application that would extend to the expiration date of the full statutory term of the **prior patent**, "as the term of said **prior patent** is presently shortened by any terminal disclaimer," in the event that said **prior patent** later:

expires for failure to pay a maintenance fee;
is held unenforceable;
is found invalid by a court of competent jurisdiction;
is statutorily disclaimed in whole or terminally disclaimed under 37 CFR 1.321;
has all claims canceled by a reexamination certificate;
is reissued; or
is in any manner terminated prior to the expiration of its full statutory term as presently shortened by any terminal disclaimer.

Check either box 1 or 2 below, if appropriate.

1. ☐ For submissions on behalf of a business/organization (e.g., corporation, partnership, university, government agency, etc.), the undersigned is empowered to act on behalf of the business/organization.

I hereby declare that all statements made herein of my own knowledge are true and that all statements made on information and belief are believed to be true; and further that these statements were made with the knowledge that willful false statements and the like so made are punishable by fine or imprisonment, or both, under Section 1001 of Title 18 of the United States Code and that such willful false statements may jeopardize the validity of the application or any patent issued thereon.

2. ☐ The undersigned is an attorney or agent of record. Reg. No._____

/Robert Paul Morris/ — Signature
09/18/2012 — Date

Robert Paul Morris
Typed or printed name

919-828-1792
Telephone Number

☑ Terminal disclaimer fee under 37 CFR 1.20(d) included.

WARNING: Information on this form may become public. Credit card information should not be included on this form. Provide credit card information and authorization on PTO-2038.

*Statement under 37 CFR 3.73(b) is required if terminal disclaimer is signed by the assignee (owner).
Form PTO/SB/96 may be used for making this certification. See MPEP § 324.

This collection of information is required by 37 CFR 1.321. The information is required to obtain or retain a benefit by the public which is to file (and by the USPTO to process) an application. Confidentiality is governed by 35 U.S.C. 122 and 37 CFR 1.11 and 1.14. This collection is estimated to take 12 minutes to complete, including gathering, preparing, and submitting the completed application form to the USPTO. Time will vary depending upon the individual case. Any comments on the amount of time you require to complete this form and/or suggestions for reducing this burden, should be sent to the Chief Information Officer, U.S. Patent and Trademark Office, U.S. Department of Commerce, P.O. Box 1450, Alexandria, VA 22313-1450. DO NOT SEND FEES OR COMPLETED FORMS TO THIS ADDRESS. **SEND TO: Commissioner for Patents, P.O. Box 1450, Alexandria, VA 22313-1450.**

If you need assistance in completing the form, call 1-800-PTO-9199 and select option 2.

Privacy Act Statement

The **Privacy Act of 1974 (P.L. 93-579)** requires that you be given certain information in connection with your submission of the attached form related to a patent application or patent. Accordingly, pursuant to the requirements of the Act, please be advised that: (1) the general authority for the collection of this information is 35 U.S.C. 2(b)(2); (2) furnishing of the information solicited is voluntary; and (3) the principal purpose for which the information is used by the U.S. Patent and Trademark Office is to process and/or examine your submission related to a patent application or patent. If you do not furnish the requested information, the U.S. Patent and Trademark Office may not be able to process and/or examine your submission, which may result in termination of proceedings or abandonment of the application or expiration of the patent.

The information provided by you in this form will be subject to the following routine uses:

1. The information on this form will be treated confidentially to the extent allowed under the Freedom of Information Act (5 U.S.C. 552) and the Privacy Act (5 U.S.C 552a). Records from this system of records may be disclosed to the Department of Justice to determine whether disclosure of these records is required by the Freedom of Information Act.
2. A record from this system of records may be disclosed, as a routine use, in the course of presenting evidence to a court, magistrate, or administrative tribunal, including disclosures to opposing counsel in the course of settlement negotiations.
3. A record in this system of records may be disclosed, as a routine use, to a Member of Congress submitting a request involving an individual, to whom the record pertains, when the individual has requested assistance from the Member with respect to the subject matter of the record.
4. A record in this system of records may be disclosed, as a routine use, to a contractor of the Agency having need for the information in order to perform a contract. Recipients of information shall be required to comply with the requirements of the Privacy Act of 1974, as amended, pursuant to 5 U.S.C. 552a(m).
5. A record related to an International Application filed under the Patent Cooperation Treaty in this system of records may be disclosed, as a routine use, to the International Bureau of the World Intellectual Property Organization, pursuant to the Patent Cooperation Treaty.
6. A record in this system of records may be disclosed, as a routine use, to another federal agency for purposes of National Security review (35 U.S.C. 181) and for review pursuant to the Atomic Energy Act (42 U.S.C. 218(c)).
7. A record from this system of records may be disclosed, as a routine use, to the Administrator, General Services, or his/her designee, during an inspection of records conducted by GSA as part of that agency's responsibility to recommend improvements in records management practices and programs, under authority of 44 U.S.C. 2904 and 2906. Such disclosure shall be made in accordance with the GSA regulations governing inspection of records for this purpose, and any other relevant (*i.e.*, GSA or Commerce) directive. Such disclosure shall not be used to make determinations about individuals.
8. A record from this system of records may be disclosed, as a routine use, to the public after either publication of the application pursuant to 35 U.S.C. 122(b) or issuance of a patent pursuant to 35 U.S.C. 151. Further, a record may be disclosed, subject to the limitations of 37 CFR 1.14, as a routine use, to the public if the record was filed in an application which became abandoned or in which the proceedings were terminated and which application is referenced by either a published application, an application open to public inspection or an issued patent.
9. A record from this system of records may be disclosed, as a routine use, to a Federal, State, or local law enforcement agency, if the USPTO becomes aware of a violation or potential violation of law or regulation.

Doc Code: WFEE
Document Description: Fee Worksheet (PTO-875)

PTO/SB/06 (09-11)
Approved for use through 01/31/2014. OMB 0651-0032
U.S. Patent and Trademark Office; U.S. DEPARTMENT OF COMMERCE
Under the Paperwork Reduction Act of 1995, no persons are required to respond to a collection of information unless it displays a valid OMB control number.

PATENT APPLICATION FEE DETERMINATION RECORD

Substitute for Form PTO-875

Application or Docket Number: 12714063

APPLICATION AS FILED – PART I

FOR	(Column 1) NUMBER FILED	(Column 2) NUMBER EXTRA	SMALL ENTITY RATE ($)	SMALL ENTITY FEE ($)	OR	OTHER THAN SMALL ENTITY RATE ($)	OTHER THAN SMALL ENTITY FEE ($)
BASIC FEE (37 CFR 1.16(a), (b), or (c))	N/A	N/A	N/A			N/A	
SEARCH FEE (37 CFR 1.16(k), (i), or (m))	N/A	N/A	N/A			N/A	
EXAMINATION FEE (37 CFR 1.16(o), (p), or (q))	N/A	N/A	N/A			N/A	
TOTAL CLAIMS (37 CFR 1.16(i))	minus 20 =	*	X =		OR	X =	
INDEPENDENT CLAIMS (37 CFR 1.16(h))	minus 3 =	*	X =			X =	
APPLICATION SIZE FEE (37 CFR 1.16(s))	If the specification and drawings exceed 100 sheets of paper, the application size fee due is $310 ($155 for small entity) for each additional 50 sheets or fraction thereof. See 35 U.S.C. 41(a)(1)(G) and 37 CFR 1.16(s).						
MULTIPLE DEPENDENT CLAIM PRESENT (37 CFR 1.16(j))			N/A			N/A	
			TOTAL			TOTAL	

* If the difference in column 1 is less than zero, enter "0" in column 2.

APPLICATION AS AMENDED – PART II

AMENDMENTA

	(Column 1) CLAIMS REMAINING AFTER AMENDMENT		(Column 2) HIGHEST NUMBER PREVIOUSLY PAID FOR	(Column 3) PRESENT EXTRA	SMALL ENTITY RATE ($)	SMALL ENTITY ADDI-TIONAL FEE ($)	OR	OTHER THAN SMALL ENTITY RATE ($)	OTHER THAN SMALL ENTITY ADDI-TIONAL FEE ($)
Total (37 CFR 1.16(i))	* 25	Minus	** 25	= 0	X 30 =	0	OR	X =	
Independent (37 CFR 1.16(h))	* 6	Minus	*** 6	= 0	X 125 =	0	OR	X =	
Application Size Fee (37 CFR 1.16(s))									
FIRST PRESENTATION OF MULTIPLE DEPENDENT CLAIM (37 CFR 1.16(j))					N/A		OR	N/A	
					TOTAL ADD'L FEE	0	OR	TOTAL ADD'L FEE	

AMENDMENTB

	(Column 1) CLAIMS REMAINING AFTER AMENDMENT		(Column 2) HIGHEST NUMBER PREVIOUSLY PAID FOR	(Column 3) PRESENT EXTRA	RATE ($)	ADDI-TIONAL FEE ($)	OR	RATE ($)	ADDI-TIONAL FEE ($)
Total (37 CFR 1.16(i))	*	Minus	**	=	X =		OR	X =	
Independent (37 CFR 1.16(h))	*	Minus	***	=	X =		OR	X =	
Application Size Fee (37 CFR 1.16(s))									
FIRST PRESENTATION OF MULTIPLE DEPENDENT CLAIM (37 CFR 1.16(j))					N/A		OR	N/A	
					TOTAL ADD'L FEE	0	OR	TOTAL ADD'L FEE	

* If the entry in column 1 is less than the entry in column 2, write "0" in column 3.
** If the "Highest Number Previously Paid For" IN THIS SPACE is less than 20, enter "20".
*** If the "Highest Number Previously Paid For" IN THIS SPACE is less than 3, enter "3".
The "Highest Number Previously Paid For" (Total or Independent) is the highest number found in the appropriate box in column 1.

This collection of information is required by 37 CFR 1.16. The information is required to obtain or retain a benefit by the public which is to file (and by the USPTO to process) an application. Confidentiality is governed by 35 U.S.C. 122 and 37 CFR 1.14. This collection is estimated to take 12 minutes to complete, including gathering, preparing, and submitting the completed application form to the USPTO. Time will vary depending upon the individual case. Any comments on the amount of time you require to complete this form and/or suggestions for reducing this burden, should be sent to the Chief Information Officer, U.S. Patent and Trademark Office, U.S. Department of Commerce, P.O. Box 1450, Alexandria, VA 22313-1450. DO NOT SEND FEES OR COMPLETED FORMS TO THIS ADDRESS. **SEND TO: Commissioner for Patents, P.O. Box 1450, Alexandria, VA 22313-1450.**

If you need assistance in completing the form, call 1-800-PTO-9199 and select option 2.

Privacy Act Statement

The Privacy Act of 1974 (P.L. 93-579) requires that you be given certain information in connection with your submission of the attached form related to a patent application or patent. Accordingly, pursuant to the requirements of the Act, please be advised that: (1) the general authority for the collection of this information is 35 U.S.C. 2(b)(2); (2) furnishing of the information solicited is voluntary; and (3) the principal purpose for which the information is used by the U.S. Patent and Trademark Office is to process and/or examine your submission related to a patent application or patent. If you do not furnish the requested information, the U.S. Patent and Trademark Office may not be able to process and/or examine your submission, which may result in termination of proceedings or abandonment of the application or expiration of the patent.

The information provided by you in this form will be subject to the following routine uses:

1. The information on this form will be treated confidentially to the extent allowed under the Freedom of Information Act (5 U.S.C. 552) and the Privacy Act (5 U.S.C 552a). Records from this system of records may be disclosed to the Department of Justice to determine whether disclosure of these records is required by the Freedom of Information Act.
2. A record from this system of records may be disclosed, as a routine use, in the course of presenting evidence to a court, magistrate, or administrative tribunal, including disclosures to opposing counsel in the course of settlement negotiations.
3. A record in this system of records may be disclosed, as a routine use, to a Member of Congress submitting a request involving an individual, to whom the record pertains, when the individual has requested assistance from the Member with respect to the subject matter of the record.
4. A record in this system of records may be disclosed, as a routine use, to a contractor of the Agency having need for the information in order to perform a contract. Recipients of information shall be required to comply with the requirements of the Privacy Act of 1974, as amended, pursuant to 5 U.S.C. 552a(m).
5. A record related to an International Application filed under the Patent Cooperation Treaty in this system of records may be disclosed, as a routine use, to the International Bureau of the World Intellectual Property Organization, pursuant to the Patent Cooperation Treaty.
6. A record in this system of records may be disclosed, as a routine use, to another federal agency for purposes of National Security review (35 U.S.C. 181) and for review pursuant to the Atomic Energy Act (42 U.S.C. 218(c)).
7. A record from this system of records may be disclosed, as a routine use, to the Administrator, General Services, or his/her designee, during an inspection of records conducted by GSA as part of that agency's responsibility to recommend improvements in records management practices and programs, under authority of 44 U.S.C. 2904 and 2906. Such disclosure shall be made in accordance with the GSA regulations governing inspection of records for this purpose, and any other relevant (i.e., GSA or Commerce) directive. Such disclosure shall not be used to make determinations about individuals.
8. A record from this system of records may be disclosed, as a routine use, to the public after either publication of the application pursuant to 35 U.S.C. 122(b) or issuance of a patent pursuant to 35 U.S.C. 151. Further, a record may be disclosed, subject to the limitations of 37 CFR 1.14, as a routine use, to the public if the record was filed in an application which became abandoned or in which the proceedings were terminated and which application is referenced by either a published application, an application open to public inspection or an issued patent.
9. A record from this system of records may be disclosed, as a routine use, to a Federal, State, or local law enforcement agency, if the USPTO becomes aware of a violation or potential violation of law or regulation.

PTO/SB/06 (07-06)
Approved for use through 1/31/2007. OMB 0651-0032
U.S. Patent and Trademark Office; U.S. DEPARTMENT OF COMMERCE
Under the Paperwork Reduction Act of 1995, no persons are required to respond to a collection of information unless it displays a valid OMB control number.

PATENT APPLICATION FEE DETERMINATION RECORD

Substitute for Form PTO-875

Application or Docket Number	Filing Date	☐ To be Mailed
12/714,063	02/26/2010	

APPLICATION AS FILED – PART I

FOR	(Column 1) NUMBER FILED	(Column 2) NUMBER EXTRA	SMALL ENTITY ☒ RATE ($)	SMALL ENTITY FEE ($)	OR	OTHER THAN SMALL ENTITY RATE ($)	OTHER THAN SMALL ENTITY FEE ($)
☐ BASIC FEE (37 CFR 1.16(a), (b), or (c))	N/A	N/A	N/A			N/A	
☐ SEARCH FEE (37 CFR 1.16(k), (i), or (m))	N/A	N/A	N/A			N/A	
☐ EXAMINATION FEE (37 CFR 1.16(o), (p), or (q))	N/A	N/A	N/A			N/A	
TOTAL CLAIMS (37 CFR 1.16(i))	minus 20 =	*	X $ =		OR	X $ =	
INDEPENDENT CLAIMS (37 CFR 1.16(h))	minus 3 =	*	X $ =			X $ =	
☐ APPLICATION SIZE FEE (37 CFR 1.16(s))	If the specification and drawings exceed 100 sheets of paper, the application size fee due is $250 ($125 for small entity) for each additional 50 sheets or fraction thereof. See 35 U.S.C. 41(a)(1)(G) and 37 CFR 1.16(s).						
☐ MULTIPLE DEPENDENT CLAIM PRESENT (37 CFR 1.16(j))							
* If the difference in column 1 is less than zero, enter "0" in column 2.			TOTAL			TOTAL	

APPLICATION AS AMENDED – PART II

AMENDMENT 09/18/2012	(Column 1) CLAIMS REMAINING AFTER AMENDMENT		(Column 2) HIGHEST NUMBER PREVIOUSLY PAID FOR	(Column 3) PRESENT EXTRA	SMALL ENTITY RATE ($)	SMALL ENTITY ADDITIONAL FEE ($)	OR	OTHER THAN SMALL ENTITY RATE ($)	OTHER THAN SMALL ENTITY ADDITIONAL FEE ($)
Total (37 CFR 1.16(i))	* 25	Minus	** 25	= 0	X $30 =	0	OR	X $ =	
Independent (37 CFR 1.16(h))	* 6	Minus	***6	= 0	X $125 =	0	OR	X $ =	
☐ Application Size Fee (37 CFR 1.16(s))									
☐ FIRST PRESENTATION OF MULTIPLE DEPENDENT CLAIM (37 CFR 1.16(j))							OR		
					TOTAL ADD'L FEE	0	OR	TOTAL ADD'L FEE	

AMENDMENT	(Column 1) CLAIMS REMAINING AFTER AMENDMENT		(Column 2) HIGHEST NUMBER PREVIOUSLY PAID FOR	(Column 3) PRESENT EXTRA	RATE ($)	ADDITIONAL FEE ($)		RATE ($)	ADDITIONAL FEE ($)
Total (37 CFR 1.16(i))	*	Minus	**	=	X $ =		OR	X $ =	
Independent (37 CFR 1.16(h))	*	Minus	***	=	X $ =		OR	X $ =	
☐ Application Size Fee (37 CFR 1.16(s))									
☐ FIRST PRESENTATION OF MULTIPLE DEPENDENT CLAIM (37 CFR 1.16(j))							OR		
					TOTAL ADD'L FEE		OR	TOTAL ADD'L FEE	

* If the entry in column 1 is less than the entry in column 2, write "0" in column 3.

** If the "Highest Number Previously Paid For" IN THIS SPACE is less than 20, enter "20".

*** If the "Highest Number Previously Paid For" IN THIS SPACE is less than 3, enter "3".

The "Highest Number Previously Paid For" (Total or Independent) is the highest number found in the appropriate box in column 1.

Legal Instrument Examiner:
/NINA RATANAVONG/

This collection of information is required by 37 CFR 1.16. The information is required to obtain or retain a benefit by the public which is to file (and by the USPTO to process) an application. Confidentiality is governed by 35 U.S.C. 122 and 37 CFR 1.14. This collection is estimated to take 12 minutes to complete, including gathering, preparing, and submitting the completed application form to the USPTO. Time will vary depending upon the individual case. Any comments on the amount of time you require to complete this form and/or suggestions for reducing this burden, should be sent to the Chief Information Officer, U.S. Patent and Trademark Office, U.S. Department of Commerce, P.O. Box 1450, Alexandria, VA 22313-1450. DO NOT SEND FEES OR COMPLETED FORMS TO THIS ADDRESS. **SEND TO: Commissioner for Patents, P.O. Box 1450, Alexandria, VA 22313-1450.**

If you need assistance in completing the form, call 1-800-PTO-9199 and select option 2.

UNITED STATES PATENT AND TRADEMARK OFFICE

UNITED STATES DEPARTMENT OF COMMERCE
United States Patent and Trademark Office
Address: COMMISSIONER FOR PATENTS
P.O. Box 1450
Alexandria, Virginia 22313-1450
www.uspto.gov

APPLICATION NO.	FILING DATE	FIRST NAMED INVENTOR	ATTORNEY DOCKET NO.	CONFIRMATION NO.
12/714,063	02/26/2010	Robert Paul Morris	0110	5929

92924 7590 06/21/2012
OoOT
Robert Paul Morris
712 Latta Street
Raleigh, NC 27607

EXAMINER
COULTER, KENNETH R

ART UNIT	PAPER NUMBER
2445	

NOTIFICATION DATE	DELIVERY MODE
06/21/2012	ELECTRONIC

Please find below and/or attached an Office communication concerning this application or proceeding.

The time period for reply, if any, is set in the attached communication.

Notice of the Office communication was sent electronically on above-indicated "Notification Date" to the following e-mail address(es):

paul.morris@nc.rr.com
rpmorris@yahoo.com

PTOL-90A (Rev. 04/07)

Office Action Summary	Application No.	Applicant(s)	
	12/714,063	MORRIS, ROBERT PAUL	
	Examiner	Art Unit	
	Kenneth R. Coulter	2445	

-- The MAILING DATE of this communication appears on the cover sheet with the correspondence address --

Period for Reply

A SHORTENED STATUTORY PERIOD FOR REPLY IS SET TO EXPIRE 3 MONTH(S) OR THIRTY (30) DAYS, WHICHEVER IS LONGER, FROM THE MAILING DATE OF THIS COMMUNICATION.

- Extensions of time may be available under the provisions of 37 CFR 1.136(a). In no event, however, may a reply be timely filed after SIX (6) MONTHS from the mailing date of this communication.
- If NO period for reply is specified above, the maximum statutory period will apply and will expire SIX (6) MONTHS from the mailing date of this communication.
- Failure to reply within the set or extended period for reply will, by statute, cause the application to become ABANDONED (35 U.S.C. § 133). Any reply received by the Office later than three months after the mailing date of this communication, even if timely filed, may reduce any earned patent term adjustment. See 37 CFR 1.704(b).

Status

1)☒ Responsive to communication(s) filed on *26 February 2010*.

2a)☐ This action is **FINAL**. 2b)☒ This action is non-final.

3)☐ An election was made by the applicant in response to a restriction requirement set forth during the interview on _____; the restriction requirement and election have been incorporated into this action.

4)☐ Since this application is in condition for allowance except for formal matters, prosecution as to the merits is closed in accordance with the practice under *Ex parte Quayle*, 1935 C.D. 11, 453 O.G. 213.

Disposition of Claims

5)☒ Claim(s) *1-25* is/are pending in the application.

5a) Of the above claim(s) _____ is/are withdrawn from consideration.

6)☐ Claim(s) _____ is/are allowed.

7)☒ Claim(s) *1,4-7,12,14-16,18,19 and 22-25* is/are rejected.

8)☒ Claim(s) *2,3,8-11,13,17,20 and 21* is/are objected to.

9)☐ Claim(s) _____ are subject to restriction and/or election requirement.

Application Papers

10)☐ The specification is objected to by the Examiner.

11)☒ The drawing(s) filed on *26 February 2010* is/are: a)☒ accepted or b)☐ objected to by the Examiner.

Applicant may not request that any objection to the drawing(s) be held in abeyance. See 37 CFR 1.85(a).

Replacement drawing sheet(s) including the correction is required if the drawing(s) is objected to. See 37 CFR 1.121(d).

12)☐ The oath or declaration is objected to by the Examiner. Note the attached Office Action or form PTO-152.

Priority under 35 U.S.C. § 119

13)☐ Acknowledgment is made of a claim for foreign priority under 35 U.S.C. § 119(a)-(d) or (f).

a)☐ All b)☐ Some * c)☐ None of:

1.☐ Certified copies of the priority documents have been received.

2.☐ Certified copies of the priority documents have been received in Application No. _____.

3.☐ Copies of the certified copies of the priority documents have been received in this National Stage application from the International Bureau (PCT Rule 17.2(a)).

* See the attached detailed Office action for a list of the certified copies not received.

Attachment(s)

1) ☒ Notice of References Cited (PTO-892)

2) ☐ Notice of Draftsperson's Patent Drawing Review (PTO-948)

3) ☒ Information Disclosure Statement(s) (PTO/SB/08) Paper No(s)/Mail Date *2/26/2010*.

4) ☐ Interview Summary (PTO-413) Paper No(s)/Mail Date. _____ .

5) ☐ Notice of Informal Patent Application

6) ☐ Other: _____.

DETAILED ACTION

Claim Objections

Claim 23 is objected to because of the following informalities: improper punctuation in the last line of claim 23 of claim 23.

Appropriate correction is required.

Claim Rejections - 35 USC § 112

The following is a quotation of the second paragraph of 35 U.S.C. 112:

> The specification shall conclude with one or more claims particularly pointing out and distinctly claiming the subject matter which the applicant regards as his invention.

Claim 12 recites the limitation "the second node metadata" in line 3. There is insufficient antecedent basis for this limitation in the claim.

Double Patenting

Claims 1, 4 – 7, 14 – 16, 18, 19, and 22 – 25 are provisionally rejected on the ground of nonstatutory obviousness-type double patenting as being unpatentable over claims 11 – 15, 17, 18, and 20 of copending Application No. 12/714,454. Although the conflicting claims are not identical, they are not patentably distinct from each other because of the mapping below.

Claim 1 of the present Application maps to claim 11 of ‘454.

Claim 4 of the present Application maps to claim 13 of '454.

Claim 5 of the present Application maps to claim 15 of '454.

Claim 6 of the present Application maps to claim 12 of '454.

Claim 7 of the present Application maps to claim 14 of '454.

Claim 14 of the present Application maps to claim 18 of '454.

Claim 15 of the present Application maps to claim 11 of '454.

Claim 16 of the present Application maps to claim 13 of '454.

Claim 18 of the present Application maps to claim 17 of '454.

Claim 19 of the present Application maps to claim 17 of '454.

Claim 22 of the present Application maps to claim 20 of '454.

Claim 23 of the present Application maps to claim 20 of '454.

Claim 24 of the present Application maps to claim 11 of '454.

Claim 25 of the present Application maps to claim 13 of '454.

This is a provisional obviousness-type double patenting rejection because the conflicting claims have not in fact been patented.

Allowable Subject Matter

Claims 2, 3, 8 – 11, 13, 17, 20, and 21 are objected to as being dependent upon a rejected base claim, but would be allowable if rewritten in independent form including all of the limitations of the base claim and any intervening claims.

Any inquiry concerning this communication or earlier communications from the examiner should be directed to Kenneth R. Coulter whose telephone number is (571)272-3879. The examiner can normally be reached on M - F, 7:30 am - 4 pm.

If attempts to reach the examiner by telephone are unsuccessful, the examiner's supervisor, Lynn Feild can be reached on 571 272-2092. The fax phone number for the organization where this application or proceeding is assigned is 571-273-8300.

Information regarding the status of an application may be obtained from the Patent Application Information Retrieval (PAIR) system. Status information for published applications may be obtained from either Private PAIR or Public PAIR. Status information for unpublished applications is available through Private PAIR only. For more information about the PAIR system, see http://pair-direct.uspto.gov. Should you have questions on access to the Private PAIR system, contact the Electronic Business Center (EBC) at 866-217-9197 (toll-free). If you would like assistance from a USPTO Customer Service Representative or access to the automated information system, call 800-786-9199 (IN USA OR CANADA) or 571-272-1000.

Kenneth R Coulter

/Kenneth R Coulter/
Primary Examiner, Art Unit 2445

/KRC/

Notice of References Cited	Application/Control No. 12/714,063	Applicant(s)/Patent Under Reexamination MORRIS, ROBERT PAUL	
	Examiner Kenneth R. Coulter	Art Unit 2445	Page 1 of 1

U.S. PATENT DOCUMENTS

*		Document Number Country Code-Number-Kind Code	Date MM-YYYY	Name	Classification
*	A	US-2011/0213820 A1	09-2011	Morris, Robert Paul	709/201
	B	US-			
	C	US-			
	D	US-			
	E	US-			
	F	US-			
	G	US-			
	H	US-			
	I	US-			
	J	US-			
	K	US-			
	L	US-			
	M	US-			

FOREIGN PATENT DOCUMENTS

*		Document Number Country Code-Number-Kind Code	Date MM-YYYY	Country	Name	Classification
	N					
	O					
	P					
	Q					
	R					
	S					
	T					

NON-PATENT DOCUMENTS

*		Include as applicable: Author, Title Date, Publisher, Edition or Volume, Pertinent Pages)
	U	
	V	
	W	
	X	

*A copy of this reference is not being furnished with this Office action. (See MPEP § 707.05(a).)
Dates in MM-YYYY format are publication dates. Classifications may be US or foreign.

+You Search Images Maps Play YouTube News Gmail More Sign in

deactivate TCP connection idle header

Scholar

About 4,440 results (**0.15** sec)

My Ci

Articles

Legal documents

Any time
Since 2012
Since 2011
Since 2008
Custom range...

Recent additions

include patents
include citations

[HTML] TCP extensions for high performance
V Jacobson, R Braden... - 1992 - rsync.tools.ietf.org
... off for low-speed paths, or allow a user or installation manager to **disable** them ... been **idle**, tl **TCP** may Jacobson, Braden, & Borman [Page 22] RFC 1323 **TCP** Extensions for ... Performance May 1992 update a clock or timestamp value associated with the **connection** whenever TS ...
Cited by 1385 - Related articles - Cached - All 34 versions

TCP/IP offload device with reduced sequential processing
DD Starr, CM Philbrick - US Patent 6,996,070, 2006 - Google Patents
... In contrast to a sequential processor technique, the combinatorial logic gen- erates a flush detect signal from the **TCP** state variables and **header** values without performing sequential processor instructions or sequential memory accesses. ...
Cited by 77 - Related articles - All 4 versions

Performance interactions between P-HTTP and **TCP** implementations
J Heidemann - ACM SIGCOMM Computer Communication Review, 1997 - dl.acm.org
... Until it bug is resolved, it may be necessary to **disable** persistent connections for clients ... is complementary to our approach where we pace packets instead of slow- starting after an **idle connection**. ... that oc- cur due to interactions between specific implementa- tions of **TCP** and P
Cited by 106 - Related articles - BL Direct - All 27 versions

[RTF] TCP extensions for high performance
D Borman, R Braden... - Request for Comments (..., 1992 - wizard.ae.krakow.pl
... paths might consider turning these extensions off for low-speed paths, or allow a user or installation manager to **disable** them. ... To detect how long the **connection** has been **idle**, the **T** may update a clock or timestamp value associated with the **connection** whenever TS ...
Cited by 73 - Related articles - View as HTML - All 2 versions

[BOOK] Probing **TCP** implementations
DE Comer... - 1993 - usenix.org
... T and host H is in progressWe used the UNIX command ifconfig to **disable** the interface ... 1. I a host to be tested, open a **TCP connection** to the echo port [rfc862 ... Sending small data segm lowers **TCP** performance because **TCP** and IP **headers** consume network bandwidth ...
Cited by 61 - Related articles - Library Search - All 59 versions

Network performance effects of HTTP/1.1, CSS1, and PNG
HF Nielsen, J Gettys, A Baird-Smith... - ACM SIGCOMM ..., 1997 - dl.acm.org
... X Window System, which caused the original introduction of the ability to **disable** Nagle's algoı application implementation buffers its output before writing it to the underlying **TCP** stack, roughly full, or when there is no more requests coming in on that **connection**, or before it ...
Cited by 305 - Related articles - BL Direct - All 47 versions

METHODS, SYSTEMS, AND COMPUTER PROGRAM PRODUCTS FOR SHAR INFORMATION FOR DETECTING AN **IDLE TCP CONNECTION**
RP Morris - US Patent App. 12/714,454, 2010 - Google Patents
... **idle** Send the **TCP** packet in the **TCP connection** to the second node to 206 provide the meta for the first **idle** time period to the second node 208 Detect the first **idle** time period based on the first **idle** information I/ **Deactivate** the **TCP connection** in response to ...
All 2 versions

METHODS, SYSTEMS, AND COMPUTER PROGRAM PRODUCTS FOR DETE **TCP CONNECTION**
RP Morris - US Patent App. 12/714,063, 2010 - Google Patents
... **header**, in the first packet, for detecting 4 a first **idle** time period during which no **TCP** packet including data in a 30 first **TCP** data stream sent in the **TCP connection** from the second **Deacti** the **TCP** ... The method also includes **deactivating** the **TCP connection** in response ...
All 2 versions

[PDF] USING CONSISTENCY CHECKS TO PREVENT MALICIOUS TUNNELING
A Singh, O Nordström, ALM Dos Santos - ... , Network, and Information ..., 2003 - Citeseer
... a monolithic kernel the machine would have to be rebooted into a different kernel to **disable** th **tcp** ... model implemented in the kernel benefits from the fact that there is no way to turn off this functionality by ... completely eliminate misuse of **idle** fields in **TCP**/IP and ICMP messages. ...
Related articles - View as HTML - All 9 versions

[PDF] Configuring **TCP**
TCPT Stamp... - 198.133.219.239
... enabled on the host, sessions may be dropped because system administrators sometimes **dis** the ICMP ... instead of hostname format and to display the VRF table associated with the **connec** for all endpoints with the addresses in IP format, use the show **tcp** brief numeric ...
View as HTML - All 33 versions

Create email alert

1 2 3 4 5 6 7 8 9 10 **Next**

About Google Scholar All About Google Privacy & Terms

+You Search Images Maps Play YouTube News Gmail More Sign in

disconnect TCP connection idle header

Scholar

About 11,800 results (**0.22** sec)

My Ci

Articles

Legal documents

Any time
Since 2012
Since 2011
Since 2008
Custom range...

Recent additions

include patents
include citations

[BOOK] The case for persistent-**connection** HTTP
JC Mogul - 1995 - dl.acm.org
... the server would use one of the other mechanisms, either sending a "Content-length" **header** be- fore the data, or transmitting a special delimiter after the data. While a client is actively using a server, normally neither end would close the **TCP connection**. **Idle TCP** connec- tions ...
Cited by 327 - Related articles - Library Search - BL Direct - All 36 versions

[HTML] **TCP** extensions for high performance
V Jacobson, R Braden... - 1992 - rsync.tools.ietf.org
... retransmission timeout calculation can tolerate aliasing when the sampling frequency is "close' to the ... the **TCP** may Jacobson, Braden, & Borman [Page 22] RFC 1323 **TCP** Extensions for ... 1992 update a clock or timestamp value associated with the **connection** whenever TS ...
Cited by 1385 - Related articles - Cached - All 34 versions

What **TCP**/IP protocol **headers** can tell us about the web
FD Smith, FH Campos, K Jeffay... - ... Performance Evaluation Review, 2001 - dl.acm.org
... Close to 70% of the consecutive top-level page references go to an IP address that is different from the address used for the previous top ... We identify periods in which the client either has no established **TCP** con- nections or where no established **connection** has an ...
Cited by 215 - Related articles - BL Direct - All 31 versions

Freeze-**TCP**: A true end-to-end **TCP** enhancement mechanism for mobile enviro
T Goff, J Moronski, DS Phatak... - ... 2000. Nineteenth Annual ..., 2000 - ieeexplore.ieee.org
... Note that Freeze-**TCP** is only useful if a disconnection occurs while data is being ... posed to w the receiver is **idle** for some time and then gets **disconnected**), which is ... Meantime the receive has already reconnected, but the **connection** remains **idle** until the sender transmits its ...
Cited by 467 - Related articles - BL Direct - All 27 versions

[HTML] Point-to-point tunneling protocol (pptp)
K Hamzeh, G Pall, W Verthein, J Taarud, W Little... - 1999 - hjp.at
... 31 2.13. Call-**Disconnect**-Notify . . . . Loss of synchronization must result in immediate clo of the control **connection's TCP** session. For clarity, all Control **Connection** message templates in the next section include the entire PPTP Control **Connection** message **header**. ...
Cited by 234 - Related articles - Cached - All 4 versions

[HTML] Congestion control in IP/**TCP** internetworks
J Nagle - 1984 - cabernet.tools.ietf.org
... Our scheme will keep connections alive under severe overload but at reduced bandwidth per **connection**. ... though, should be regarded as grounds for action by a gateway to **disconnect** a If IP / **TCP** networks are to be operated under heavy load, **TCP** implementa- tions must ...
Cited by 468 - Related articles - Cached - All 37 versions

M-**TCP**: **TCP** for mobile cellular networks
K Brown... - ACM SIGCOMM Computer Communication Review, 1997 - dl.acm.org
... C D C D C D C = Connected Period O - **Disconnected** Period Figure 1: Serial timeouts at the **TCP** sender. ... We have found that the standard split **connection** approach, which uses **TCP** on both halves of the **connection**, does, in fact, respond poorly to lengthy disconnections. ...
Cited by 542 - Related articles - BL Direct - All 36 versions

An analysis of **TCP** reset behaviour on the internet
M Arlitt... - ACM SIGCOMM Computer Communication .... 2005 - dl.acm.org

... for more than N seconds) and threshold-based (eg, if more than X persistent connections are open, then close the **connection** that has been **idle** the longest ... To study the **TCP connection** behaviour, we telnet to port 80 on each server and issue an HTTP request, and ...
Cited by 38 - Related articles - All 7 versions

[HTML] ISO Transport Service on top of the **TCP** Version: 3
MT Rose... - 1987 - merlot.tools.ietf.org
... If the **TCP** informs the TS-peer that the **connection** has been closed or has errored, this indica an N-**DISCONNECT**.INDICATION event. ... 6. Packet Format A fundamental difference between the **TCP** and the network service expected by TP0 is that the **TCP** manages a ...
Cited by 32 - Related articles - Cached - All 30 versions

ShockAbsorber: A **TCP connection** router
G Goldszmidt... - ... Conference, 1997. GLOBECOM'97., ..., 1997 - ieeexplore.ieee.org
... The Executor handles this problem by time stamping the **connection** records each time a pacl flows through ... The garbage collector thread is activated in the background by the **TCP** slow tim firthermore, DNS may only dis- close up to 32 IP addresses for each name, due to ...
Cited by 28 - Related articles - BL Direct - All 2 versions

Create email alert

1 2 3 4 5 6 7 8 9 10 **Next**

About Google Scholar All About Google Privacy & Terms

WEST Search History

Hide Items | Restore | Clear | Close

DATE: Monday, June 18, 2012

Hide?	Set Name	Query	Hit Count
Prior Art			
		DB=PGPB,USPT; PLUR=YES; OP=ADJ	
☐	L3	L2 same (idl$ near4 header) Morris '063,454	2
☐	L2	(deactiv$ or disconnect$) near2 (TCP connection)	211
☐	L1	20110213820 or 20110213893	2

END OF SEARCH HISTORY

Search Notes	Application/Control No.	Applicant(s)/Patent Under Reexamination
	12714063	MORRIS, ROBERT PAUL
	Examiner	**Art Unit**
	KENNETH R COULTER	2445

SEARCHED

Class	Subclass	Date	Examiner
709	227, 228, 232	6/16/2012	/KRC/
713	500	6/16/2012	/KRC/

SEARCH NOTES

Search Notes	Date	Examiner
WEST: USPT, PGPB, EPAB, DWPI	6/16/2012	/KRC/
google scholar	6/18/2012	/KRC/
searched for possible double patenting	6/14/2012	/KRC/
WEST: USPT, PGPB	6/18/2012	/KRC/

INTERFERENCE SEARCH

Class	Subclass	Date	Examiner

	/KENNETH R COULTER/ Primary Examiner.Art Unit 2445

UNITED STATES PATENT AND TRADEMARK OFFICE

UNITED STATES DEPARTMENT OF COMMERCE
United States Patent and Trademark Office
Address: COMMISSIONER FOR PATENTS
P.O. Box 1450
Alexandria, Virginia 22313-1450
www.uspto.gov

BIB DATA SHEET

CONFIRMATION NO. 5929

SERIAL NUMBER	FILING or 371(c) DATE	CLASS	GROUP ART UNIT	ATTORNEY DOCKET NO.
12/714,063	02/26/2010 RULE	709	2445	0110

APPLICANTS
Robert Paul Morris, Residence Not Provided;

**** CONTINUING DATA ***************************

**** FOREIGN APPLICATIONS ***************************

**** IF REQUIRED, FOREIGN FILING LICENSE GRANTED **** ** SMALL ENTITY **
03/09/2010

			STATE OR COUNTRY	SHEETS DRAWINGS	TOTAL CLAIMS	INDEPENDENT CLAIMS
Foreign Priority claimed ☐ Yes ☑ No 35 USC 119(a-d) conditions met ☐ Yes ☑ No Verified and Acknowledged /KENNETH R COULTER/ Examiner's Signature		☐ Met after Allowance Initials		8	25	6

ADDRESS
OoOT
Robert Paul Morris
712 Latta Street
Raleigh, NC 27607
UNITED STATES

TITLE
METHODS, SYSTEMS, AND COMPUTER PROGRAM PRODUCTS FOR DETECTING AN IDLE TCP CONNECTION

FILING FEE RECEIVED		
987	FEES: Authority has been given in Paper No._____ to charge/credit DEPOSIT ACCOUNT No._____ for following:	☐ All Fees ☐ 1.16 Fees (Filing) ☐ 1.17 Fees (Processing Ext. of time) ☐ 1.18 Fees (Issue) ☐ Other _____ ☐ Credit

BIB (Rev. 05/07).

PTO/SB/08a (01-10)
Approved for use through 07/31/2012. OMB 0651-0031
U.S. Patent and Trademark Office; U.S. DEPARTMENT OF COMMERCE
Under the Paperwork Reduction Act of 1995, no persons are required to respond to a collection of information unless it contains a valid OMB control number.

INFORMATION DISCLOSURE STATEMENT BY APPLICANT (Not for submission under 37 CFR 1.99)		
	Application Number	
	Filing Date	2010-02-26
	First Named Inventor	Robert Paul Morris
	Art Unit	
	Examiner Name	Kenneth Coulter
	Attorney Docket Number	0110

U.S.PATENTS Remove

Examiner Initial*	Cite No	Patent Number	Kind Code[1]	Issue Date	Name of Patentee or Applicant of cited Document	Pages,Columns,Lines where Relevant Passages or Relevant Figures Appear
	1					

If you wish to add additional U.S. Patent citation information please click the Add button. Add

U.S.PATENT APPLICATION PUBLICATIONS Remove

Examiner Initial*	Cite No	Publication Number	Kind Code[1]	Publication Date	Name of Patentee or Applicant of cited Document	Pages,Columns,Lines where Relevant Passages or Relevant Figures Appear
	1	20090252072	A1	2009-10-08	Helena	

If you wish to add additional U.S. Published Application citation information please click the Add button. Add

FOREIGN PATENT DOCUMENTS Remove

Examiner Initial*	Cite No	Foreign Document Number[3]	Country Code[2] ¡	Kind Code[4]	Publication Date	Name of Patentee or Applicant of cited Document	Pages,Columns,Lines where Relevant Passages or Relevant Figures Appear	T[5]
	1							☐

If you wish to add additional Foreign Patent Document citation information please click the Add button Add

NON-PATENT LITERATURE DOCUMENTS Remove

Examiner Initials*	Cite No	Include name of the author (in CAPITAL LETTERS), title of the article (when appropriate), title of the item (book, magazine, journal, serial, symposium, catalog, etc), date, pages(s), volume-issue number(s), publisher, city and/or country where published.	T[5]

EFS Web 2.1.17 ALL REFERENCES CONSIDERED EXCEPT WHERE LINED THROUGH. /KRC/

Receipt date: 02/26/2010	Application Number	12714063 - GAU: 2445
INFORMATION DISCLOSURE STATEMENT BY APPLICANT (**Not for submission under 37 CFR 1.99)**	Filing Date	2010-02-26
	First Named Inventor	Robert Paul Morris
	Art Unit	
	Examiner Name	
	Attorney Docket Number	0110

	1	Postel, John (ed.), Editor; "Transmission Control Protocol - DARPA Internet Protocol Specification", RFC 793, USC/ Information Sciences Institute, ~~http://tools.ietf.org/rfc/rfc793.~~txt, September 1981	☐
	2	Eggert, L., Gont, F., "TCP User Timeout Option", RFC 5482, Internet Engineering Task Force (IEFT), ~~http://tools.ieft.org/rfc/rfc5482.~~txt, March 2009,	☐
	3	Nagle, John, "Congestion Control in IP/TCP Internetworks", RFC 896, Ford Aerospace and Communications Corporation, ~~http://tools.ietf.org/rfc/rfc896.~~txt, January 1984	☐
	4	Mathis, M., Mahdave, J., Floyd, S., Romanow, A., "TCP Selective Acknowledgement Options", RFC 2018, Internet Engineering Task Force, ~~http://tools.ietf.org/rfc/rfc2018.~~txt, October 1996	☐
	5	Allman, M., Paxson, V., Stevens, W., "TCP Congestion Control", RFC 2581, Internet Engineering Task Force, ~~http://tools.ietf.org/rfc/rfc2581,~~ April 1999	☐
	6	Koziero, Charles M., TCP Connection Management and Problem Handling, the Connection Reset Function, and TCP "Keepalives", The TCP/IP Guide, p. 3, ~~http://www.tcpipguide.com/free/t_TCPConnectionManagementandProblemHandlingtheConnec-3.htm~~, accessed February 2010, (c) 2003-2010	☐
	7	Busatto, Fabio, "TCP Keepalive Overview", TCP Keepalive HOWTO, Section 2, ~~http://tldp.org/HOWTO/html_single/TCP-Keepalive-HOWTO/#~~overview, accessed January 2010, May 2007	☐

If you wish to add additional non-patent literature document citation information please click the Add button Add

EXAMINER SIGNATURE

Examiner Signature	/Kenneth Coulter/	Date Considered	06/18/2012

*EXAMINER: Initial if reference considered, whether or not citation is in conformance with MPEP 609. Draw line through a citation if not in conformance and not considered. Include copy of this form with next communication to applicant.

[1] See Kind Codes of USPTO Patent Documents at www.USPTO.GOV or MPEP 901.04. [2] Enter office that issued the document, by the two-letter code (WIPO Standard ST.3). [3] For Japanese patent documents, the indication of the year of the reign of the Emperor must precede the serial number of the patent document. [4] Kind of document by the appropriate symbols as indicated on the document under WIPO Standard ST.16 if possible. [5] Applicant is to place a check mark here if English language translation is attached.

ALL REFERENCES CONSIDERED EXCEPT WHERE LINED THROUGH. /KRC/

WEST Search History

Hide Items | Restore | Clear | Close

DATE: Saturday, June 16, 2012

Hide?	Set Name	Query	Hit Count
Prior Art			
DB=PGPB,USPT; PLUR=YES; OP=ADJ			
☐	L12	l10 and (l11 or l3) Morris '063,'454	10
☐	L11	713/500.ccls.	2163
☐	L10	L9 same (((stay or keep) near2 alive$) or heartbeat or (heart beat))	35
☐	L9	TCP$ near12 (idl$ or inactiv$)	665
DB=EPAB,DWPI; PLUR=YES; OP=ADJ			
☐	L8	L7 and (((stay or keep) near2 alive$) or heartbeat or (heart beat))	1
☐	L7	TCP$ near12 (idl$ or inactiv$)	15
☐	L6	L5 and (((stay or keep) near2 alive$) or heartbeat or (heart beat))	0
☐	L5	TCP$ near12 (idl$ or inactiv$) near12 header Morris '063,'454	2
DB=PGPB,USPT; PLUR=YES; OP=ADJ			
☐	L4	l1 and L3 Morris '063,'454	2
☐	L3	(709/227 or 709/228 or 709/232).ccls.	15798
☐	L2	L1 and (((stay or keep) near2 alive$) or heartbeat or (heart beat)) Morris '063,'454	2
☐	L1	TCP$ near12 (idl$ or inactiv$) near12 header	17

END OF SEARCH HISTORY

UNITED STATES PATENT AND TRADEMARK OFFICE

UNITED STATES DEPARTMENT OF COMMERCE
United States Patent and Trademark Office
Address: COMMISSIONER FOR PATENTS
P.O. Box 1450
Alexandria, Virginia 22313-1450
www.uspto.gov

APPLICATION NUMBER	FILING OR 371(C) DATE	FIRST NAMED APPLICANT	ATTY. DOCKET NO./TITLE
12/714,063	02/26/2010	Robert Paul Morris	0110

CONFIRMATION NO. 5929

92924
Robert Paul Morris
712 Latta Street
Raleigh, NC 27607

PUBLICATION NOTICE

OC000000049630153

Title:METHODS, SYSTEMS, AND COMPUTER PROGRAM PRODUCTS FOR DETECTING AN IDLE TCP CONNECTION

Publication No.US-2011-0213893-A1
Publication Date:09/01/2011

NOTICE OF PUBLICATION OF APPLICATION

The above-identified application will be electronically published as a patent application publication pursuant to 37 CFR 1.211, et seq. The patent application publication number and publication date are set forth above.

The publication may be accessed through the USPTO's publically available Searchable Databases via the Internet at www.uspto.gov. The direct link to access the publication is currently http://www.uspto.gov/patft/.

The publication process established by the Office does not provide for mailing a copy of the publication to applicant. A copy of the publication may be obtained from the Office upon payment of the appropriate fee set forth in 37 CFR 1.19(a)(1). Orders for copies of patent application publications are handled by the USPTO's Office of Public Records. The Office of Public Records can be reached by telephone at (703) 308-9726 or (800) 972-6382, by facsimile at (703) 305-8759, by mail addressed to the United States Patent and Trademark Office, Office of Public Records, Alexandria, VA 22313-1450 or via the Internet.

In addition, information on the status of the application, including the mailing date of Office actions and the dates of receipt of correspondence filed in the Office, may also be accessed via the Internet through the Patent Electronic Business Center at www.uspto.gov using the public side of the Patent Application Information and Retrieval (PAIR) system. The direct link to access this status information is currently http://pair.uspto.gov/. Prior to publication, such status information is confidential and may only be obtained by applicant using the private side of PAIR.

Further assistance in electronically accessing the publication, or about PAIR, is available by calling the Patent Electronic Business Center at 1-866-217-9197.

Office of Data Managment, Application Assistance Unit (571) 272-4000, or (571) 272-4200, or 1-888-786-0101

Under the Paperwork Reduction Act of 1995, no persons are required to respond to a collection of information unless it contains a valid OMB control number.

Application Data Sheet 37 CFR 1.76	Attorney Docket Number	0110
	Application Number	
Title of Invention	METHODS, SYSTEMS, AND COMPUTER PROGRAM PRODUCTS FOR DETECTING AN IDLE TCP CONNECTION	

The application data sheet is part of the provisional or nonprovisional application for which it is being submitted. The following form contains the bibliographic data arranged in a format specified by the United States Patent and Trademark Office as outlined in 37 CFR 1.76.
This document may be completed electronically and submitted to the Office in electronic format using the Electronic Filing System (EFS) or the document may be printed and included in a paper filed application.

Secrecy Order 37 CFR 5.2

☐ Portions or all of the application associated with this Application Data Sheet may fall under a Secrecy Order pursuant to 37 CFR 5.2 (Paper filers only. Applications that fall under Secrecy Order may not be filed electronically.)

Applicant Information:

Applicant 1 Remove

Applicant Authority ◉ Inventor ◯ Legal Representative under 35 U.S.C. 117 ◯ Party of Interest under 35 U.S.C. 118

Prefix	Given Name	Middle Name	Family Name	Suffix
	Robert	Paul	Morris	

Residence Information (Select One) ◉ US Residency ◯ Non US Residency ◯ Active US Military Service

City	Raleigh	State/Province	NC	Country of Residence i	US

Citizenship under 37 CFR 1.41(b) i US

Mailing Address of Applicant:

Address 1	712 Latta Street		
Address 2			
City	Raleigh	State/Province	NC
Postal Code	27607	Country i	US

All Inventors Must Be Listed - Additional Inventor Information blocks may be generated within this form by selecting the **Add** button. Add

Correspondence Information:

Enter either Customer Number or complete the Correspondence Information section below.
For further information see 37 CFR 1.33(a).

☐ **An Address is being provided for the correspondence Information of this application.**

Customer Number	92924		
Email Address	paul.morris@nc.rr.com	Add Email	Remove Email

Application Information:

Title of the Invention	METHODS, SYSTEMS, AND COMPUTER PROGRAM PRODUCTS FOR DETECTING AN IDLE TCP CONNECTION		
Attorney Docket Number	0110	Small Entity Status Claimed	☒
Application Type	Nonprovisional		
Subject Matter	Utility		
Suggested Class (if any)		Sub Class (if any)	
Suggested Technology Center (if any)			
Total Number of Drawing Sheets (if any)	8	Suggested Figure for Publication (if any)	

Under the Paperwork Reduction Act of 1995, no persons are required to respond to a collection of information unless it contains a valid OMB control number.

Application Data Sheet 37 CFR 1.76	Attorney Docket Number	0110
	Application Number	
Title of Invention	METHODS, SYSTEMS, AND COMPUTER PROGRAM PRODUCTS FOR DETECTING AN IDLE TCP CONNECTION	

Publication Information:

☐	Request Early Publication (Fee required at time of Request 37 CFR 1.219)
☐	**Request Not to Publish.** I hereby request that the attached application not be published under 35 U.S. C. 122(b) and certify that the invention disclosed in the attached application **has not and will not** be the subject of an application filed in another country, or under a multilateral international agreement, that requires publication at eighteen months after filing.

Representative Information:

Representative information should be provided for all practitioners having a power of attorney in the application. Providing this information in the Application Data Sheet does not constitute a power of attorney in the application (see 37 CFR 1.32).
Enter either Customer Number or complete the Representative Name section below. If both sections are completed the Customer Number will be used for the Representative Information during processing.

Please Select One:	◉ Customer Number	◯ US Patent Practitioner	◯ Limited Recognition (37 CFR 11.9)
Customer Number	92924		

Domestic Benefit/National Stage Information:

This section allows for the applicant to either claim benefit under 35 U.S.C. 119(e), 120, 121, or 365(c) or indicate National Stage entry from a PCT application. Providing this information in the application data sheet constitutes the specific reference required by 35 U.S.C. 119(e) or 120, and 37 CFR 1.78(a)(2) or CFR 1.78(a)(4), and need not otherwise be made part of the specification.

Prior Application Status			Remove
Application Number	Continuity Type	Prior Application Number	Filing Date (YYYY-MM-DD)

Additional Domestic Benefit/National Stage Data may be generated within this form by selecting the **Add** button. Add

Foreign Priority Information:

This section allows for the applicant to claim benefit of foreign priority and to identify any prior foreign application for which priority is not claimed. Providing this information in the application data sheet constitutes the claim for priority as required by 35 U.S.C. 119(b) and 37 CFR 1.55(a).

			Remove
Application Number	Country i	Parent Filing Date (YYYY-MM-DD)	Priority Claimed
			◉ Yes ◯ No

Additional Foreign Priority Data may be generated within this form by selecting the **Add** button. Add

Assignee Information:

Providing this information in the application data sheet does not substitute for compliance with any requirement of part 3 of Title 37 of the CFR to have an assignment recorded in the Office.

Assignee 1 Remove

Under the Paperwork Reduction Act of 1995, no persons are required to respond to a collection of information unless it contains a valid OMB control number.

Application Data Sheet 37 CFR 1.76	Attorney Docket Number	0110
	Application Number	
Title of Invention	METHODS, SYSTEMS, AND COMPUTER PROGRAM PRODUCTS FOR DETECTING AN IDLE TCP CONNECTION	

If the Assignee is an Organization check here. ☐				
Prefix	**Given Name**	Middle Name	**Family Name**	Suffix
Mailing Address Information:				
Address 1				
Address 2				
City		**State/Province**		
Country i		Postal Code		
Phone Number		Fax Number		
Email Address				
Additional Assignee Data may be generated within this form by selecting the **Add** button.				Add

Signature:

A signature of the applicant or representative is required in accordance with 37 CFR 1.33 and 10.18. Please see 37 CFR 1.4(d) for the form of the signature.					
Signature	/Robert Paul Morris/			Date (YYYY-MM-DD)	2010-02-26
First Name	Robert	Last Name	Morris	Registration Number	

This collection of information is required by 37 CFR 1.76. The information is required to obtain or retain a benefit by the public which is to file (and by the USPTO to process) an application. Confidentiality is governed by 35 U.S.C. 122 and 37 CFR 1.14. This collection is estimated to take 23 minutes to complete, including gathering, preparing, and submitting the completed application data sheet form to the USPTO. Time will vary depending upon the individual case. Any comments on the amount of time you require to complete this form and/or suggestions for reducing this burden, should be sent to the Chief Information Officer, U.S. Patent and Trademark Office, U.S. Department of Commerce, P.O. Box 1450, Alexandria, VA 22313-1450. DO NOT SEND FEES OR COMPLETED FORMS TO THIS ADDRESS. **SEND TO: Commissioner for Patents, P.O. Box 1450, Alexandria, VA 22313-1450.**

Privacy Act Statement

The Privacy Act of 1974 (P.L. 93-579) requires that you be given certain information in connection with your submission of the attached form related to a patent application or patent. Accordingly, pursuant to the requirements of the Act, please be advised that: (1) the general authority for the collection of this information is 35 U.S.C. 2(b)(2); (2) furnishing of the information solicited is voluntary; and (3) the principal purpose for which the information is used by the U.S. Patent and Trademark Office is to process and/or examine your submission related to a patent application or patent. If you do not furnish the requested information, the U.S. Patent and Trademark Office may not be able to process and/or examine your submission, which may result in termination of proceedings or abandonment of the application or expiration of the patent.

The information provided by you in this form will be subject to the following routine uses:

1. The information on this form will be treated confidentially to the extent allowed under the Freedom of Information Act (5 U.S.C. 552) and the Privacy Act (5 U.S.C. 552a). Records from this system of records may be disclosed to the Department of Justice to determine whether the Freedom of Information Act requires disclosure of these records.

2. A record from this system of records may be disclosed, as a routine use, in the course of presenting evidence to a court, magistrate, or administrative tribunal, including disclosures to opposing counsel in the course of settlement negotiations.

3. A record in this system of records may be disclosed, as a routine use, to a Member of Congress submitting a request involving an individual, to whom the record pertains, when the individual has requested assistance from the Member with respect to the subject matter of the record.

4. A record in this system of records may be disclosed, as a routine use, to a contractor of the Agency having need for the information in order to perform a contract. Recipients of information shall be required to comply with the requirements of the Privacy Act of 1974, as amended, pursuant to 5 U.S.C. 552a(m).

5. A record related to an International Application filed under the Patent Cooperation Treaty in this system of records may be disclosed, as a routine use, to the International Bureau of the World Intellectual Property Organization, pursuant to the Patent Cooperation Treaty.

6. A record in this system of records may be disclosed, as a routine use, to another federal agency for purposes of National Security review (35 U.S.C. 181) and for review pursuant to the Atomic Energy Act (42 U.S.C. 218(c)).

7. A record from this system of records may be disclosed, as a routine use, to the Administrator, General Services, or his/her designee, during an inspection of records conducted by GSA as part of that agency's responsibility to recommend improvements in records management practices and programs, under authority of 44 U.S.C. 2904 and 2906. Such disclosure shall be made in accordance with the GSA regulations governing inspection of records for this purpose, and any other relevant (i.e., GSA or Commerce) directive. Such disclosure shall not be used to make determinations about individuals.

8. A record from this system of records may be disclosed, as a routine use, to the public after either publication of the application pursuant to 35 U.S.C. 122(b) or issuance of a patent pursuant to 35 U.S.C. 151. Further, a record may be disclosed, subject to the limitations of 37 CFR 1.14, as a routine use, to the public if the record was filed in an application which became abandoned or in which the proceedings were terminated and which application is referenced by either a published application, an application open to public inspections or an issued patent.

9. A record from this system of records may be disclosed, as a routine use, to a Federal, State, or local law enforcement agency, if the USPTO becomes aware of a violation or potential violation of law or regulation.

PTO/SB/01A (01-09)
Approved for use through 06/30/2010. OMB 0651-0032
U.S. Patent and Trademark Office; U.S. DEPARTMENT OF COMMERCE
Under the Paperwork Reduction Act of 1995, no persons are required to respond to a collection of information unless it displays a valid OMB control number.

DECLARATION (37 CFR 1.63) FOR UTILITY OR DESIGN APPLICATION USING AN APPLICATION DATA SHEET (37 CFR 1.76)

Title of Invention	METHODS, SYSTEMS, AND COMPUTER PROGRAM PRODUCTS FOR DETECTING AN IDLE TCP CONNECTION

As the below named inventor(s), I/we declare that:

This declaration is directed to:

☒ The attached application, or

☐ Application No. _____ filed on _____

☐ As amended on _____ (if applicable);

I/we believe that I/we am/are the original and first inventor(s) of the subject matter which is claimed and for which a patent is sought;

I/we have reviewed and understand the contents of the above-identified application, including the claims, as amended by any amendment specifically referred to above;

I/we acknowledge the duty to disclose to the United States Patent and Trademark Office all information known to me/us to be material to patentability as defined in 37 CFR 1.56, including for continuation-in-part applications, material information which became available between the filing date of the prior application and the national or PCT International filing date of the continuation-in-part application.

WARNING:

Petitioner/applicant is cautioned to avoid submitting personal information in documents filed in a patent application that may contribute to identity theft. Personal information such as social security numbers, bank account numbers, or credit card numbers (other than a check or credit card authorization form PTO-2038 submitted for payment purposes) is never required by the USPTO to support a petition or an application. If this type of personal information is included in documents submitted to the USPTO, petitioners/applicants should consider redacting such personal information from the documents before submitting them to the USPTO. Petitioner/applicant is advised that the record of a patent application is available to the public after publication of the application (unless a non-publication request in compliance with 37 CFR 1.213(a) is made in the application) or issuance of a patent. Furthermore, the record from an abandoned application may also be available to the public if the application is referenced in a published application or an issued patent (see 37 CFR 1.14). Checks and credit card authorization forms PTO-2038 submitted for payment purposes are not retained in the application file and therefore are not publicly available.

All statements made herein of my/our own knowledge are true, all statements made herein on information and belief are believed to be true, and further that these statements were made with the knowledge that willful false statements and the like are punishable by fine or imprisonment, or both, under 18 U.S.C. 1001, and may jeopardize the validity of the application or any patent issuing thereon.

FULL NAME OF INVENTOR(S)

Inventor one: Robert Paul Morris Date: 2010/02/26

Signature: Robert Paul Morris Citizen of: US

Inventor two: _____ Date: _____

Signature: _____ Citizen of: _____

☐ Additional inventors or a legal representative are being named on _____ additional form(s) attached hereto.

This collection of information is required by 35 U.S.C. 115 and 37 CFR 1.63. The information is required to obtain or retain a benefit by the public which is to file (and by the USPTO to process) an application. Confidentiality is governed by 35 U.S.C. 122 and 37 CFR 1.11 and 1.14. This collection is estimated to take 1 minute to complete, including gathering, preparing, and submitting the completed application form to the USPTO. Time will vary depending upon the individual case. Any comments on the amount of time you require to complete this form and/or suggestions for reducing this burden, should be sent to the Chief Information Officer, U.S. Patent and Trademark Office, U.S. Department of Commerce, P.O. Box 1450, Alexandria, VA 22313-1450. DO NOT SEND FEES OR COMPLETED FORMS TO THIS ADDRESS. **SEND TO: Commissioner for Patents, P.O. Box 1450, Alexandria, VA 22313-1450.**

If you need assistance in completing the form, call 1-800-PTO-9199 and select option 2.

Electronic Patent Application Fee Transmittal

Application Number:	12714063
Filing Date:	26-Feb-2010
Title of Invention:	METHODS, SYSTEMS, AND COMPUTER PROGRAM PRODUCTS FOR DETECTING AN IDLE TCP CONNECTION
First Named Inventor/Applicant Name:	Robert Paul Morris
Filer:	Robert Paul Morris
Attorney Docket Number:	0110

Filed as Small Entity

Utility under 35 USC 111(a) Filing Fees

Description	Fee Code	Quantity	Amount	Sub-Total in USD($)
Basic Filing:				
Pages:				
Claims:				
Miscellaneous-Filing:				
Late filing fee for oath or declaration	2051	1	65	65
Petition:				
Patent-Appeals-and-Interference:				
Post-Allowance-and-Post-Issuance:				
Extension-of-Time:				

Description	Fee Code	Quantity	Amount	Sub-Total in USD($)
Miscellaneous:				
			Total in USD ($)	**65**

Electronic Acknowledgement Receipt

EFS ID:	9402755
Application Number:	12714063
International Application Number:	
Confirmation Number:	5929
Title of Invention:	METHODS, SYSTEMS, AND COMPUTER PROGRAM PRODUCTS FOR DETECTING AN IDLE TCP CONNECTION
First Named Inventor/Applicant Name:	Robert Paul Morris
Customer Number:	92924
Filer:	Robert Paul Morris
Filer Authorized By:	
Attorney Docket Number:	0110
Receipt Date:	08-FEB-2011
Filing Date:	26-FEB-2010
Time Stamp:	18:41:19
Application Type:	Utility under 35 USC 111(a)

Payment information:

Submitted with Payment	yes
Payment Type	Credit Card
Payment was successfully received in RAM	$65
RAM confirmation Number	6088
Deposit Account	
Authorized User	

File Listing:

Document Number	Document Description	File Name	File Size(Bytes)/ Message Digest	Multi Part /.zip	Pages (if appl.)

1	Application Data Sheet	0110-ADS.pdf	1364653 5e058eedc14e1aa936709dfbd944843ec3e0ae31	no	4
Warnings:					
Information:					
2	Oath or Declaration filed	0110-Declaration.pdf	90917 987addc7f2224c17978083fef9b10e8cb1659c6c	no	1
Warnings:					
Information:					
3	Fee Worksheet (PTO-875)	fee-info.pdf	29946 106a46ac7f150ec793bd80d3228ec221ccab0509	no	2
Warnings:					
Information:					
		Total Files Size (in bytes):	1485516		

This Acknowledgement Receipt evidences receipt on the noted date by the USPTO of the indicated documents, characterized by the applicant, and including page counts, where applicable. It serves as evidence of receipt similar to a Post Card, as described in MPEP 503.

New Applications Under 35 U.S.C. 111
If a new application is being filed and the application includes the necessary components for a filing date (see 37 CFR 1.53(b)-(d) and MPEP 506), a Filing Receipt (37 CFR 1.54) will be issued in due course and the date shown on this Acknowledgement Receipt will establish the filing date of the application.

National Stage of an International Application under 35 U.S.C. 371
If a timely submission to enter the national stage of an international application is compliant with the conditions of 35 U.S.C. 371 and other applicable requirements a Form PCT/DO/EO/903 indicating acceptance of the application as a national stage submission under 35 U.S.C. 371 will be issued in addition to the Filing Receipt, in due course.

New International Application Filed with the USPTO as a Receiving Office
If a new international application is being filed and the international application includes the necessary components for an international filing date (see PCT Article 11 and MPEP 1810), a Notification of the International Application Number and of the International Filing Date (Form PCT/RO/105) will be issued in due course, subject to prescriptions concerning national security, and the date shown on this Acknowledgement Receipt will establish the international filing date of the application.

UNITED STATES PATENT AND TRADEMARK OFFICE

UNITED STATES DEPARTMENT OF COMMERCE
United States Patent and Trademark Office
Address: COMMISSIONER FOR PATENTS
P.O. Box 1450
Alexandria, Virginia 22313-1450
www.uspto.gov

APPLICATION NUMBER	FILING OR 371(C) DATE	FIRST NAMED APPLICANT	ATTY. DOCKET NO./TITLE
12/714,063	02/26/2010	Robert Paul Morris	0110

CONFIRMATION NO. 5929

92924
Robert Paul Morris
712 Latta Street
Raleigh, NC 27607

NOTICE

OC000000040518789

Date Mailed: 03/11/2010

NOTICE OF INFORMAL APPLICATION

This application is considered to be informal since it does not comply with the regulations for the reason(s) indicated below. The period within to correct the informalities noted below and avoid abandonment is set in the accompanying Office action.

Items Required To Avoid Processing Delays:

The item(s) indicated below are also required and should be submitted with any reply to this notice to avoid further processing delays.

A new oath or declaration, identifying this application number, or, if appropriate, an application data sheet (37 CFR 1.76), is required. The oath or declaration does not comply with 37 CFR 1.63 in that it:

- does not identify the residence (e.g., city and either state or foreign country) of each inventor.
- does not identify the complete mailing or post office address of each inventor.

UNITED STATES PATENT AND TRADEMARK OFFICE

UNITED STATES DEPARTMENT OF COMMERCE
United States Patent and Trademark Office
Address: COMMISSIONER FOR PATENTS
P.O. Box 1450
Alexandria, Virginia 22313-1450
www.uspto.gov

APPLICATION NUMBER	FILING or 371(c) DATE	GRP ART UNIT	FIL FEE REC'D	ATTY.DOCKET.NO	TOT CLAIMS	IND CLAIMS
12/714,063	02/26/2010	2447	922	0110	25	6

CONFIRMATION NO. 5929

92924
Robert Paul Morris
712 Latta Street
Raleigh, NC 27607

FILING RECEIPT

OC000000040518788

Date Mailed: 03/11/2010

Receipt is acknowledged of this non-provisional patent application. The application will be taken up for examination in due course. Applicant will be notified as to the results of the examination. Any correspondence concerning the application must include the following identification information: the U.S. APPLICATION NUMBER, FILING DATE, NAME OF APPLICANT, and TITLE OF INVENTION. Fees transmitted by check or draft are subject to collection. Please verify the accuracy of the data presented on this receipt. **If an error is noted on this Filing Receipt, please submit a written request for a Filing Receipt Correction. Please provide a copy of this Filing Receipt with the changes noted thereon. If you received a "Notice to File Missing Parts" for this application, please submit any corrections to this Filing Receipt with your reply to the Notice. When the USPTO processes the reply to the Notice, the USPTO will generate another Filing Receipt incorporating the requested corrections**

Applicant(s)

Robert Paul Morris, Residence Not Provided;

Power of Attorney: None

Domestic Priority data as claimed by applicant

Foreign Applications

If Required, Foreign Filing License Granted: 03/09/2010

The country code and number of your priority application, to be used for filing abroad under the Paris Convention, is **US 12/714,063**

Projected Publication Date: 09/01/2011

Non-Publication Request: No

Early Publication Request: No
**** SMALL ENTITY ****

Title

METHODS, SYSTEMS, AND COMPUTER PROGRAM PRODUCTS FOR DETECTING AN IDLE TCP CONNECTION

Preliminary Class

709

PROTECTING YOUR INVENTION OUTSIDE THE UNITED STATES

Since the rights granted by a U.S. patent extend only throughout the territory of the United States and have no effect in a foreign country, an inventor who wishes patent protection in another country must apply for a patent in a specific country or in regional patent offices. Applicants may wish to consider the filing of an international application under the Patent Cooperation Treaty (PCT). An international (PCT) application generally has the same effect as a regular national patent application in each PCT-member country. The PCT process **simplifies** the filing of patent applications on the same invention in member countries, but **does not result** in a grant of "an international patent" and does not eliminate the need of applicants to file additional documents and fees in countries where patent protection is desired.

Almost every country has its own patent law, and a person desiring a patent in a particular country must make an application for patent in that country in accordance with its particular laws. Since the laws of many countries differ in various respects from the patent law of the United States, applicants are advised to seek guidance from specific foreign countries to ensure that patent rights are not lost prematurely.

Applicants also are advised that in the case of inventions made in the United States, the Director of the USPTO must issue a license before applicants can apply for a patent in a foreign country. The filing of a U.S. patent application serves as a request for a foreign filing license. The application's filing receipt contains further information and guidance as to the status of applicant's license for foreign filing.

Applicants may wish to consult the USPTO booklet, "General Information Concerning Patents" (specifically, the section entitled "Treaties and Foreign Patents") for more information on timeframes and deadlines for filing foreign patent applications. The guide is available either by contacting the USPTO Contact Center at 800-786-9199, or it can be viewed on the USPTO website at http://www.uspto.gov/web/offices/pac/doc/general/index.html.

For information on preventing theft of your intellectual property (patents, trademarks and copyrights), you may wish to consult the U.S. Government website, http://www.stopfakes.gov. Part of a Department of Commerce initiative, this website includes self-help "toolkits" giving innovators guidance on how to protect intellectual property in specific countries such as China, Korea and Mexico. For questions regarding patent enforcement issues, applicants may call the U.S. Government hotline at 1-866-999-HALT (1-866-999-4158).

LICENSE FOR FOREIGN FILING UNDER

Title 35, United States Code, Section 184

Title 37, Code of Federal Regulations, 5.11 & 5.15

GRANTED

The applicant has been granted a license under 35 U.S.C. 184, if the phrase "IF REQUIRED, FOREIGN FILING LICENSE GRANTED" followed by a date appears on this form. Such licenses are issued in all applications where

the conditions for issuance of a license have been met, regardless of whether or not a license may be required as set forth in 37 CFR 5.15. The scope and limitations of this license are set forth in 37 CFR 5.15(a) unless an earlier license has been issued under 37 CFR 5.15(b). The license is subject to revocation upon written notification. The date indicated is the effective date of the license, unless an earlier license of similar scope has been granted under 37 CFR 5.13 or 5.14.

This license is to be retained by the licensee and may be used at any time on or after the effective date thereof unless it is revoked. This license is automatically transferred to any related applications(s) filed under 37 CFR 1.53(d). This license is not retroactive.

The grant of a license does not in any way lessen the responsibility of a licensee for the security of the subject matter as imposed by any Government contract or the provisions of existing laws relating to espionage and the national security or the export of technical data. Licensees should apprise themselves of current regulations especially with respect to certain countries, of other agencies, particularly the Office of Defense Trade Controls, Department of State (with respect to Arms, Munitions and Implements of War (22 CFR 121-128)); the Bureau of Industry and Security, Department of Commerce (15 CFR parts 730-774); the Office of Foreign AssetsControl, Department of Treasury (31 CFR Parts 500+) and the Department of Energy.

NOT GRANTED

No license under 35 U.S.C. 184 has been granted at this time, if the phrase "IF REQUIRED, FOREIGN FILING LICENSE GRANTED" DOES NOT appear on this form. Applicant may still petition for a license under 37 CFR 5.12, if a license is desired before the expiration of 6 months from the filing date of the application. If 6 months has lapsed from the filing date of this application and the licensee has not received any indication of a secrecy order under 35 U.S.C. 181, the licensee may foreign file the application pursuant to 37 CFR 5.15(b).

PTO/SB/08a (01-10)
Approved for use through 07/31/2012. OMB 0651-0031
U.S. Patent and Trademark Office; U.S. DEPARTMENT OF COMMERCE
Under the Paperwork Reduction Act of 1995, no persons are required to respond to a collection of information unless it contains a valid OMB control number.

INFORMATION DISCLOSURE STATEMENT BY APPLICANT (**Not for submission under 37 CFR 1.99)**		
	Application Number	
	Filing Date	2010-02-26
	First Named Inventor	Robert Paul Morris
	Art Unit	
	Examiner Name	
	Attorney Docket Number	0110

U.S.PATENTS						Remove
Examiner Initial*	Cite No	Patent Number	Kind Code[1]	Issue Date	Name of Patentee or Applicant of cited Document	Pages,Columns,Lines where Relevant Passages or Relevant Figures Appear
	1					
If you wish to add additional U.S. Patent citation information please click the Add button.						Add

U.S.PATENT APPLICATION PUBLICATIONS						Remove
Examiner Initial*	Cite No	Publication Number	Kind Code[1]	Publication Date	Name of Patentee or Applicant of cited Document	Pages,Columns,Lines where Relevant Passages or Relevant Figures Appear
	1	20090252072	A1	2009-10-08	Helena	
If you wish to add additional U.S. Published Application citation information please click the Add button.						Add

FOREIGN PATENT DOCUMENTS								Remove
Examiner Initial*	Cite No	Foreign Document Number[3]	Country Code[2] ¡	Kind Code[4]	Publication Date	Name of Patentee or Applicant of cited Document	Pages,Columns,Lines where Relevant Passages or Relevant Figures Appear	T[5]
	1							☐
If you wish to add additional Foreign Patent Document citation information please click the Add button								Add

NON-PATENT LITERATURE DOCUMENTS			Remove
Examiner Initials*	Cite No	Include name of the author (in CAPITAL LETTERS), title of the article (when appropriate), title of the item (book, magazine, journal, serial, symposium, catalog, etc), date, pages(s), volume-issue number(s), publisher, city and/or country where published.	T[5]

INFORMATION DISCLOSURE STATEMENT BY APPLICANT (Not for submission under 37 CFR 1.99)	Application Number	
	Filing Date	2010-02-26
	First Named Inventor	Robert Paul Morris
	Art Unit	
	Examiner Name	
	Attorney Docket Number	0110

	1	Postel, John (ed.), Editor; "Transmission Control Protocol - DARPA Internet Protocol Specification", RFC 793, USC/ Information Sciences Institute, http://tools.ietf.org/rfc/rfc793.txt, September 1981	☐
	2	Eggert, L., Gont, F., "TCP User Timeout Option", RFC 5482, Internet Engineering Task Force (IEFT), http://tools.ieft.org/rfc/rfc5482.txt, March 2009,	☐
	3	Nagle, John, "Congestion Control in IP/TCP Internetworks", RFC 896, Ford Aerospace and Communications Corporation, http://tools.ietf.org/rfc/rfc896.txt, January 1984	☐
	4	Mathis, M., Mahdave, J., Floyd, S., Romanow, A., "TCP Selective Acknowledgement Options", RFC 2018, Internet Engineering Task Force, http://tools.ietf.org/rfc/rfc2018.txt, October 1996	☐
	5	Allman, M., Paxson, V., Stevens, W., "TCP Congestion Control", RFC 2581, Internet Engineering Task Force, http:/ tools.ietf.org/rfc/rfc2581, April 1999	☐
	6	Koziero, Charles M., TCP Connection Management and Problem Handling, the Connection Reset Function, and TCP "Keepalives", The TCP/IP Guide, p. 3, http://www.tcpipguide.com/free/ t_TCPConnectionManagementandProblemHandlingtheConnec-3.htm, accessed February 2010, (c) 2003-2010	☐
	7	Busatto, Fabio, "TCP Keepalive Overview", TCP Keepalive HOWTO, Section 2, http://tldp.org/HOWTO/html_single/ TCP-Keepalive-HOWTO/#overview, accessed January 2010, May 2007	☐

If you wish to add additional non-patent literature document citation information please click the Add button Add

EXAMINER SIGNATURE

Examiner Signature		Date Considered	

*EXAMINER: Initial if reference considered, whether or not citation is in conformance with MPEP 609. Draw line through a citation if not in conformance and not considered. Include copy of this form with next communication to applicant.

[1] See Kind Codes of USPTO Patent Documents at www.USPTO.GOV or MPEP 901.04. [2] Enter office that issued the document, by the two-letter code (WIPO Standard ST.3). [3] For Japanese patent documents, the indication of the year of the reign of the Emperor must precede the serial number of the patent document. [4] Kind of document by the appropriate symbols as indicated on the document under WIPO Standard ST.16 if possible. [5] Applicant is to place a check mark here if English language translation is attached.

INFORMATION DISCLOSURE STATEMENT BY APPLICANT (Not for submission under 37 CFR 1.99)	Application Number	
	Filing Date	2010-02-26
	First Named Inventor	Robert Paul Morris
	Art Unit	
	Examiner Name	
	Attorney Docket Number	0110

CERTIFICATION STATEMENT

Please see 37 CFR 1.97 and 1.98 to make the appropriate selection(s):

☐ That each item of information contained in the information disclosure statement was first cited in any communication from a foreign patent office in a counterpart foreign application not more than three months prior to the filing of the information disclosure statement. See 37 CFR 1.97(e)(1).

OR

☐ That no item of information contained in the information disclosure statement was cited in a communication from a foreign patent office in a counterpart foreign application, and, to the knowledge of the person signing the certification after making reasonable inquiry, no item of information contained in the information disclosure statement was known to any individual designated in 37 CFR 1.56(c) more than three months prior to the filing of the information disclosure statement. See 37 CFR 1.97(e)(2).

☐ See attached certification statement.

☐ Fee set forth in 37 CFR 1.17 (p) has been submitted herewith.

☒ None

SIGNATURE

A signature of the applicant or representative is required in accordance with CFR 1.33, 10.18. Please see CFR 1.4(d) for the form of the signature.

Signature	/Robert Paul Morris/	Date (YYYY-MM-DD)	2010-02-26
Name/Print	Robert Paul Morris	Registration Number	

This collection of information is required by 37 CFR 1.97 and 1.98. The information is required to obtain or retain a benefit by the public which is to file (and by the USPTO to process) an application. Confidentiality is governed by 35 U.S.C. 122 and 37 CFR 1.14. This collection is estimated to take 1 hour to complete, including gathering, preparing and submitting the completed application form to the USPTO. Time will vary depending upon the individual case. Any comments on the amount of time you require to complete this form and/or suggestions for reducing this burden, should be sent to the Chief Information Officer, U.S. Patent and Trademark Office, U.S. Department of Commerce, P.O. Box 1450, Alexandria, VA 22313-1450. DO NOT SEND FEES OR COMPLETED FORMS TO THIS ADDRESS. **SEND TO: Commissioner for Patents, P.O. Box 1450, Alexandria, VA 22313-1450.**

Privacy Act Statement

The Privacy Act of 1974 (P.L. 93-579) requires that you be given certain information in connection with your submission of the attached form related to a patent application or patent. Accordingly, pursuant to the requirements of the Act, please be advised that: (1) the general authority for the collection of this information is 35 U.S.C. 2(b)(2); (2) furnishing of the information solicited is voluntary; and (3) the principal purpose for which the information is used by the U.S. Patent and Trademark Office is to process and/or examine your submission related to a patent application or patent. If you do not furnish the requested information, the U.S. Patent and Trademark Office may not be able to process and/or examine your submission, which may result in termination of proceedings or abandonment of the application or expiration of the patent.

The information provided by you in this form will be subject to the following routine uses:

1. The information on this form will be treated confidentially to the extent allowed under the Freedom of Information Act (5 U.S.C. 552) and the Privacy Act (5 U.S.C. 552a). Records from this system of records may be disclosed to the Department of Justice to determine whether the Freedom of Information Act requires disclosure of these record s.

2. A record from this system of records may be disclosed, as a routine use, in the course of presenting evidence to a court, magistrate, or administrative tribunal, including disclosures to opposing counsel in the course of settlement negotiations.

3. A record in this system of records may be disclosed, as a routine use, to a Member of Congress submitting a request involving an individual, to whom the record pertains, when the individual has requested assistance from the Member with respect to the subject matter of the record.

4. A record in this system of records may be disclosed, as a routine use, to a contractor of the Agency having need for the information in order to perform a contract. Recipients of information shall be required to comply with the requirements of the Privacy Act of 1974, as amended, pursuant to 5 U.S.C. 552a(m).

5. A record related to an International Application filed under the Patent Cooperation Treaty in this system of records may be disclosed, as a routine use, to the International Bureau of the World Intellectual Property Organization, pursuant to the Patent Cooperation Treaty.

6. A record in this system of records may be disclosed, as a routine use, to another federal agency for purposes of National Security review (35 U.S.C. 181) and for review pursuant to the Atomic Energy Act (42 U.S.C. 218(c)).

7. A record from this system of records may be disclosed, as a routine use, to the Administrator, General Services, or his/her designee, during an inspection of records conducted by GSA as part of that agency's responsibility to recommend improvements in records management practices and programs, under authority of 44 U.S.C. 2904 and 2906. Such disclosure shall be made in accordance with the GSA regulations governing inspection of records for this purpose, and any other relevant (i.e., GSA or Commerce) directive. Such disclosure shall not be used to make determinations about individuals.

8. A record from this system of records may be disclosed, as a routine use, to the public after either publication of the application pursuant to 35 U.S.C. 122(b) or issuance of a patent pursuant to 35 U.S.C. 151. Further, a record may be disclosed, subject to the limitations of 37 CFR 1.14, as a routine use, to the public if the record was filed in an application which became abandoned or in which the proceedings were terminated and which application is referenced by either a published application, an application open to public inspections or an issued patent.

9. A record from this system of records may be disclosed, as a routine use, to a Federal, State, or local law enforcement agency, if the USPTO becomes aware of a violation or potential violation of law or regulation.

Electronic Patent Application Fee Transmittal

Application Number:	
Filing Date:	
Title of Invention:	METHODS, SYSTEMS, AND COMPUTER PROGRAM PRODUCTS FOR DETECTING AN IDLE TCP CONNECTION
First Named Inventor/Applicant Name:	Robert Paul Morris
Filer:	Robert Paul Morris
Attorney Docket Number:	0110

Filed as Small Entity

Utility under 35 USC 111(a) Filing Fees

Description	Fee Code	Quantity	Amount	Sub-Total in USD($)
Basic Filing:				
Utility filing Fee (Electronic filing)	4011	1	82	82
Utility Search Fee	2111	1	270	270
Utility Examination Fee	2311	1	110	110
Pages:				
Claims:				
Claims in excess of 20	2202	5	26	130
Independent claims in excess of 3	2201	3	110	330
Miscellaneous-Filing:				

Description	Fee Code	Quantity	Amount	Sub-Total in USD($)
Petition:				
Patent-Appeals-and-Interference:				
Post-Allowance-and-Post-Issuance:				
Extension-of-Time:				
Miscellaneous:				
			Total in USD ($)	**922**

Electronic Acknowledgement Receipt

EFS ID:	7101314
Application Number:	12714063
International Application Number:	
Confirmation Number:	5929
Title of Invention:	METHODS, SYSTEMS, AND COMPUTER PROGRAM PRODUCTS FOR DETECTING AN IDLE TCP CONNECTION
First Named Inventor/Applicant Name:	Robert Paul Morris
Customer Number:	92924
Filer:	Robert Paul Morris
Filer Authorized By:	
Attorney Docket Number:	0110
Receipt Date:	26-FEB-2010
Filing Date:	
Time Stamp:	17:11:51
Application Type:	Utility under 35 USC 111(a)

Payment information:

Submitted with Payment	yes
Payment Type	Credit Card
Payment was successfully received in RAM	$922
RAM confirmation Number	4298
Deposit Account	
Authorized User	

File Listing:

Document Number	Document Description	File Name	File Size(Bytes)/ Message Digest	Multi Part /.zip	Pages (if appl.)

1	Abstract	0110-Abstract.pdf	30743 7f17e920683f44269de48fdef689174dab4a84cb	no	1
Warnings:					
Information:					
2	Claims	0110-Claims.pdf	54496 50f3df8f5ef537bb257fe37e4236c2c7c2be755c	no	8
Warnings:					
Information:					
3	Drawings-only black and white line drawings	0110-Drawings.pdf	106259 ded27125e450a54340bf61cdb4bd20224c75a3c0	no	8
Warnings:					
Information:					
4	Oath or Declaration filed	0110-Declaration.pdf	90917 987addc7f2224c17978083fef9b10e8cb1659c6c	no	1
Warnings:					
Information:					
5	Specification	0110-Specification.pdf	140431 1906e257a1be732e5edfb2dbc26123bfb6ce8f15	no	47
Warnings:					
Information:					
6	NPL Documents	Postel-RFC793.pdf	153632 d9d304daa416032cefcf4ea20ffb2151c2a50ea4	no	81
Warnings:					
Information:					
7	NPL Documents	Eggert-RFC5482.pdf	33911 2de0f3d4f77ef05e2686ca8ba3d3199b04a119e2	no	15
Warnings:					
Information:					
8	NPL Documents	Nagle-RFC896.pdf	41205 ae13362fdccee85126920f2beefb02b57237be9e	no	7
Warnings:					
Information:					
9	NPL Documents	Mathis-RFC2018.pdf	40253 1a7a2126168d81414309e0f0211c5cab9bdb5f0a	no	11
Warnings:					
Information:					

10	NPL Documents	Allman-RFC2581.pdf	45113 aca9ddc6a4a185c58e3a38a60650acf3c3f34158	no	13
Warnings:					
Information:					
11	NPL Documents	Koziero-KeepAlive-IDS.pdf	110970 36320ea12100531e566bc69b3a4d9c341a478bc8	no	2
Warnings:					
Information:					
12	NPL Documents	Bussatto-TCPkeepaliveoverview-IDS.pdf	40069 a68bb7ff4aa5d4b61406f1091e7fe47de861ac63	no	2
Warnings:					
Information:					
13	Information Disclosure Statement (IDS) Filed (SB/08)	0110-US_IDS_Form__SB_08a.pdf	612481 029781305dac5c1ec7d04ce424c0f4b82c25b35e	no	4
Warnings:					
Information:					
14	Fee Worksheet (PTO-875)	fee-info.pdf	37971 bbfe6697d5e78887caebb38f49292ccfb347dfe1	no	2
Warnings:					
Information:					
		Total Files Size (in bytes):	1538451		

This Acknowledgement Receipt evidences receipt on the noted date by the USPTO of the indicated documents, characterized by the applicant, and including page counts, where applicable. It serves as evidence of receipt similar to a Post Card, as described in MPEP 503.

<u>New Applications Under 35 U.S.C. 111</u>
If a new application is being filed and the application includes the necessary components for a filing date (see 37 CFR 1.53(b)-(d) and MPEP 506), a Filing Receipt (37 CFR 1.54) will be issued in due course and the date shown on this Acknowledgement Receipt will establish the filing date of the application.

<u>National Stage of an International Application under 35 U.S.C. 371</u>
If a timely submission to enter the national stage of an international application is compliant with the conditions of 35 U.S.C. 371 and other applicable requirements a Form PCT/DO/EO/903 indicating acceptance of the application as a national stage submission under 35 U.S.C. 371 will be issued in addition to the Filing Receipt, in due course.

<u>New International Application Filed with the USPTO as a Receiving Office</u>
If a new international application is being filed and the international application includes the necessary components for an international filing date (see PCT Article 11 and MPEP 1810), a Notification of the International Application Number and of the International Filing Date (Form PCT/RO/105) will be issued in due course, subject to prescriptions concerning national security, and the date shown on this Acknowledgement Receipt will establish the international filing date of the application.

ABSTRACT

Methods and systems are described for detecting an idle TCP connection. In one aspect, a packet in a TCP connection is received by a first node. The first node identifies in the packet a header for detecting a time period during which the first node receives no data included in a data stream sent in the connection from a second node. The first node detects the time period based on the header and deactivates the connection, in response. In another aspect, information is received by a second node for detecting an idle TCP connection. The second node creates a packet including a header based on the information. The second node sends the packet in the connection to a first node for detecting a time period during which the first node receives no data in a data stream sent in the connection from the second node.

I CLAIM:

1. A method for detecting an idle TCP connection, the method comprising:

receiving, by a first node from a second node, a first transmission control protocol (TCP) packet in a TCP connection;

identifying a first idle time period header, in the first packet, for detecting a first idle time period during which no TCP packet including data in a first TCP data stream sent in the TCP connection from the second node is received by the first node;

detecting the first idle time period based on the first idle time period header; and

deactivating the TCP connection in response to detecting the first idle time period.

2. The method of claim 1 wherein the TCP connection is identified by a first connection endpoint and a second connection endpoint, and the first node includes at least one of the first connection endpoint and a first proxy endpoint representing the first connection endpoint.

3. The method of claim 1 wherein the first idle time period header identifies, for detecting the first idle time period, at least one of a duration of time, a generator for determining a duration of time, and an input for determining a duration of time.

4. The method of claim 1 further comprising modifying at least one of a TCP keep-alive option, a TCP user timeout, a retransmission timeout, an acknowledgment timeout, and another timeout associated with the TCP connection, in response to identifying the first idle time period header.

5. The method of claim 1 wherein detecting the first idle time period includes detecting a time period, in the first idle time period, during which the first node has received acknowledgment for all data in a second TCP data stream sent in the TCP connection to the second node.

6. The method of claim 1 wherein the first idle time period header is based on a previous idle time period header identified in a previous TCP packet in the TCP connection sent by the first node to the second node prior to the receiving of the first TCP packet.

7. The method of claim 1 further comprising:

detecting a timeout based on a duration of time identified by the first idle information header; and

sending, in response to detecting the timeout, a TCP keep-alive packet in the TCP connection to the second node.

8. The method of claim 7 further comprising:

detecting an acknowledgment timeout associated with sending the TCP keep-alive packet; and

detecting the first idle time period based on detecting the acknowledgment timeout.

9. The method of claim 1 wherein detecting the first idle time period comprises:

receiving an empty TCP packet including no data in the first TCP data stream after detecting a beginning of a potential first idle time period;

in response to receiving the empty TCP packet, detecting a beginning of a next potential first idle time period.

10. The method of claim 9 wherein detecting the beginning of the next potential first idle time period is performed in response to determining the empty TCP packet matches a specified condition.

11. The method of claim 1 further comprising:

receiving the first TCP packet after receiving a previous TCP packet including a previous idle time period header for detecting a previous idle time period; and

detecting, in response to receiving the first TCP packet, the first idle time period rather than detecting the previous idle time period.

12. The method of claim 1 further comprising sending a second TCP packet in the TCP connection to the second node including an informational idle time period header identifying to the second node metadata for the first idle time period.

13. The method of claim 1 further comprising sending in the TCP connection a second TCP packet including a second idle time period header for detecting a second idle time period during which no TCP packet including data in a second TCP data stream sent in the TCP connection from the first node is received by the second node.

14. The method of claim 1 wherein deactivating includes at least one of closing the TCP connection, sending by the first node a TCP packet including a reset

indication, and releasing a resource previously allocated for the TCP connection by the first node.

15. A method for detecting an idle TCP connection, the method comprising:

receiving, by a second node, first idle information for detecting when a TCP connection is idle;

generating a TCP packet including a first idle time period header based on the first idle information; and

sending the TCP packet in the TCP connection to the first node for detecting a first idle time period during which no TCP packet including data in a first data stream sent in the TCP connection from the second node is received by the first node.

16. The method of claim 15 further comprising modifying based on the first idle information at least one of a keep-alive option, a TCP user timeout, a retransmission timeout, an acknowledgment timeout, and another timeout associated with the TCP connection.

17. The method of claim 16 further comprising:

detecting a keep-alive timeout based on the modified keep-alive option;

generating, in response to detecting the keep-alive timeout, a second TCP packet including a second idle time period header for resetting the detecting of the first idle time period; and

sending the second TCP packet in the TCP connection to the first node.

18. The method of claim 15 further comprising:

receiving in the TCP connection from the first node a second TCP packet;

identifying in the second TCP packet a second idle time period header for detecting a second idle time period during which no TCP packet including data in a second TCP data stream sent in the TCP connection from the first node is received by the second node;

detecting the second idle time period based on the second idle time period header; and

deactivating the TCP connection in response to detecting the second idle time period.

19. The method of claim 18 wherein the second idle time period header is based on the first idle time period header.

20. The method of claim 18 wherein deactivating includes at least one of closing the TCP connection, sending a TCP packet including a reset indication to the first node, and releasing a resource previously allocated for the TCP connection by the second node.

21. The method of claim 20 wherein the second idle time period includes a time period during which the second node has received acknowledgment for all data in the first TCP data stream sent in the TCP connection.

22. A system for detecting an idle TCP connection, the system comprising:

an execution environment including an instruction processing unit configured to process an instruction included in at least one of a net in-port component, an idle time period option handler component, and an idle time period monitor component;

the net in-port component configured for receiving, by a first node from a second node, a first transmission control protocol (TCP) packet in a TCP connection;

the idle time period option handler component configured for identifying a first idle time period header, in the first packet, for detecting a first idle time period during which no TCP packet including data in a first TCP data stream sent in the TCP connection from the second node is received by the first node;

the idle time period monitor component configured for detecting the first idle time period based on the first idle time period header; and

the connection state component configured for deactivating the TCP connection in response to detecting the first idle time period.

23. A system for detecting an idle TCP connection, the system comprising:

an execution environment including an instruction processing unit configured to process an instruction included in at least one of an idle time period policy component, a packet generator component, and a net out-port component;

the idle time period policy component configured for receiving, by a second node, first idle information for detecting when a TCP connection is idle;

the packet generator component configured for generating a TCP packet including a first idle time period header based on the first idle information; and

the net out-port component configured for sending the TCP packet in the TCP connection to the first node for detecting a first idle time period during which no TCP packet including data in a first data stream sent in the TCP connection from the second node is received by the first node;

24. A computer readable medium embodying a computer program, executable by a machine, for detecting an idle TCP connection, the computer program comprising executable instructions for:

receiving, by a first node from a second node, a first transmission control protocol (TCP) packet in a TCP connection;

identifying a first idle time period header, in the first packet, for detecting a first idle time period during which no TCP packet including data in a first TCP data stream sent in the TCP connection from the second node is received by the first node;

detecting the first idle time period based on the first idle time period header; and

deactivating the TCP connection in response to detecting the first idle time period.

25. A computer readable medium embodying a computer program, executable by a machine, for detecting an idle TCP connection, the computer program comprising executable instructions for:

receiving, by a second node, first idle information for detecting when a TCP connection is idle;

generating a TCP packet including a first idle time period header based on the first idle information; and

sending the TCP packet in the TCP connection to the first node for detecting a first idle time period during which no TCP packet including data in a first data stream sent in the TCP connection from the second node is received by the first node.

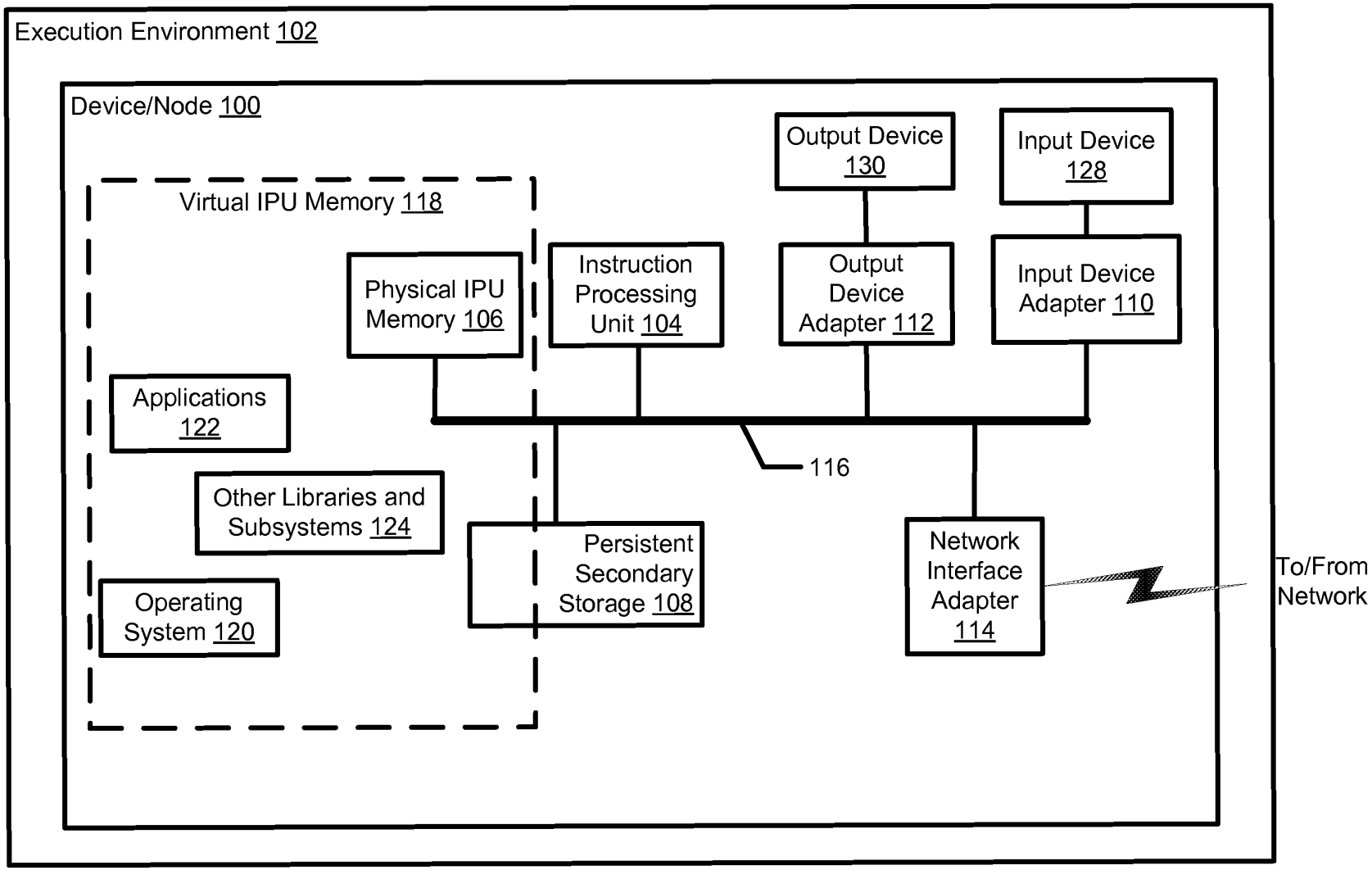
Execution Environment 102
Device/Node 100
Virtual IPU Memory 118
Physical IPU Memory 106
Applications 122
Other Libraries and Subsystems 124
Operating System 120
Instruction Processing Unit 104
Output Device 130
Input Device 128
Output Device Adapter 112
Input Device Adapter 110
116
Persistent Secondary Storage 108
Network Interface Adapter 114
To/From Network

Fig. 1

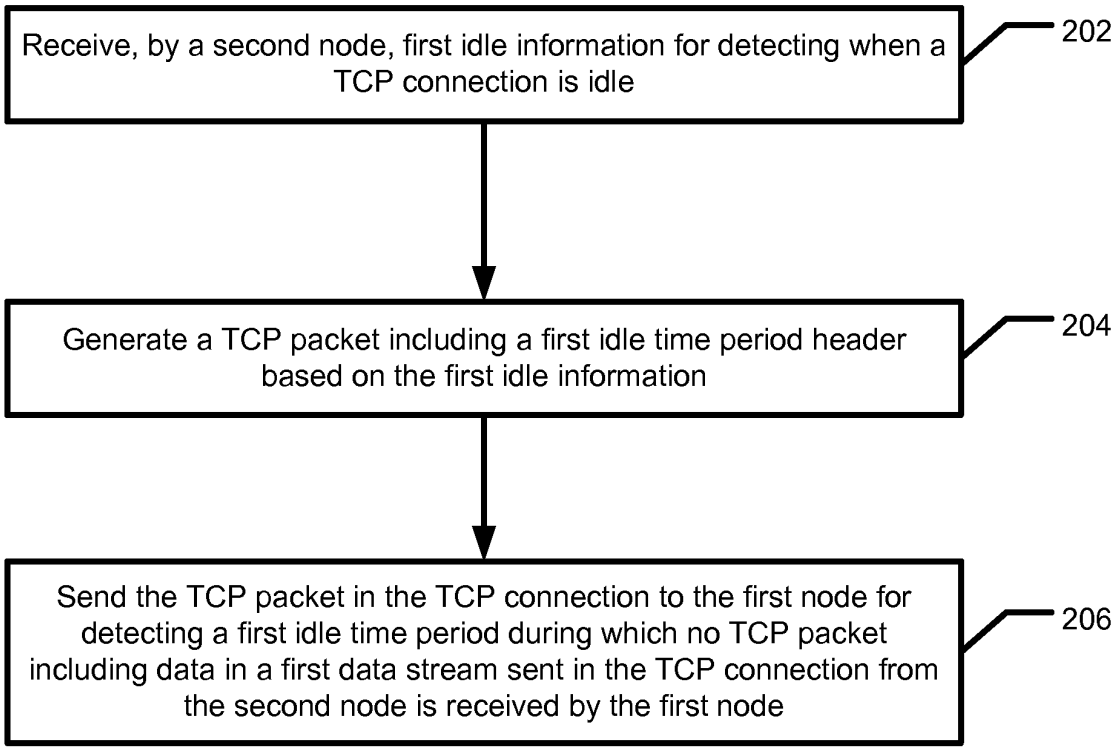
Receive, by a second node, first idle information for detecting when a TCP connection is idle
202
Generate a TCP packet including a first idle time period header based on the first idle information
204
Send the TCP packet in the TCP connection to the first node for detecting a first idle time period during which no TCP packet including data in a first data stream sent in the TCP connection from the second node is received by the first node
206

Fig. 2

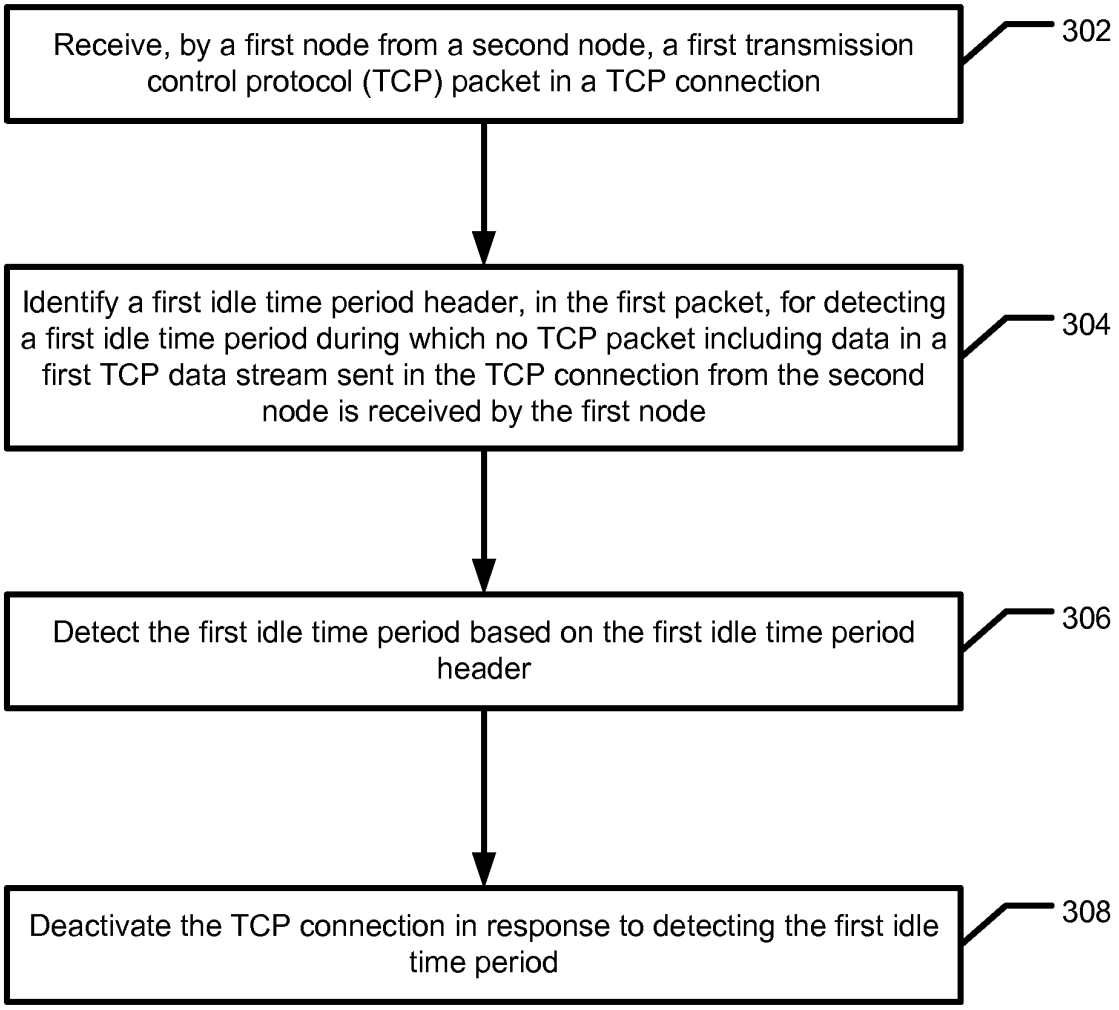
Receive, by a first node from a second node, a first transmission control protocol (TCP) packet in a TCP connection
302
Identify a first idle time period header, in the first packet, for detecting a first idle time period during which no TCP packet including data in a first TCP data stream sent in the TCP connection from the second node is received by the first node
304
Detect the first idle time period based on the first idle time period header
306
Deactivate the TCP connection in response to detecting the first idle time period
308

Fig. 3

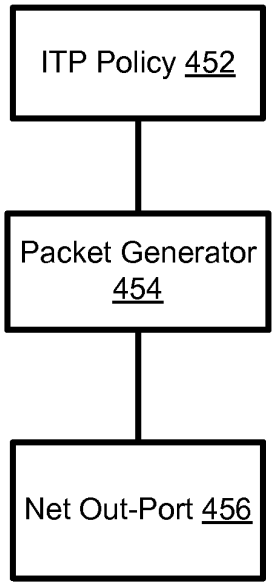
ITP Policy 452
Packet Generator 454
Net Out-Port 456

Fig. 4a

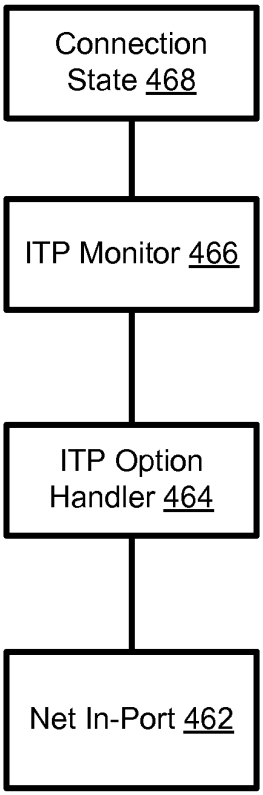
Connection State 468
ITP Monitor 466
ITP Option Handler 464
Net In-Port 462

Fig. 4b

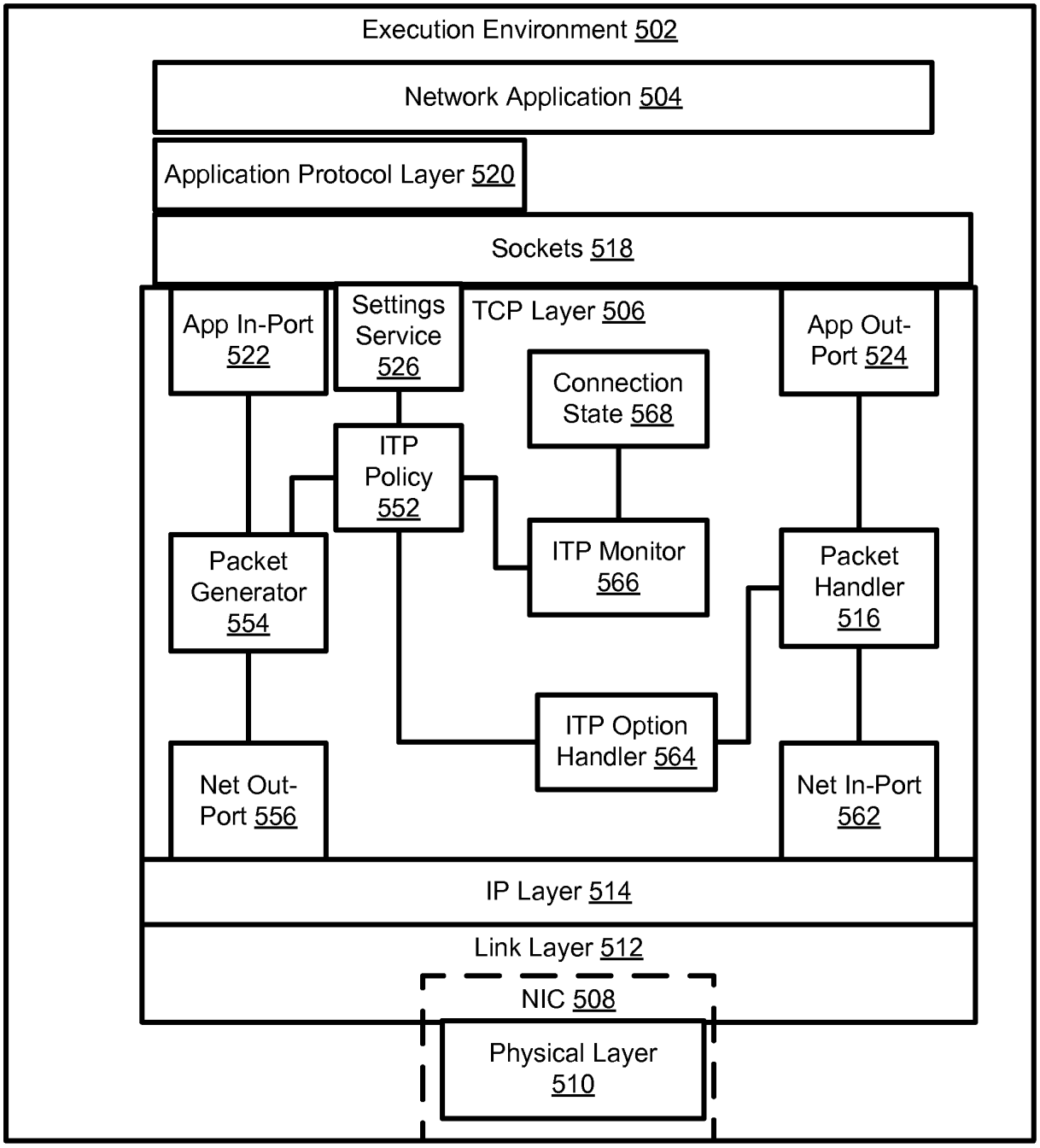
Execution Environment 502
Network Application 504
Application Protocol Layer 520
Sockets 518
App In-Port 522
Settings Service 526
TCP Layer 506
App Out-Port 524
Connection State 568
ITP Policy 552
ITP Monitor 566
Packet Generator 554
Packet Handler 516
ITP Option Handler 564
Net Out-Port 556
Net In-Port 562
IP Layer 514
Link Layer 512
NIC 508
Physical Layer 510

Fig. 5

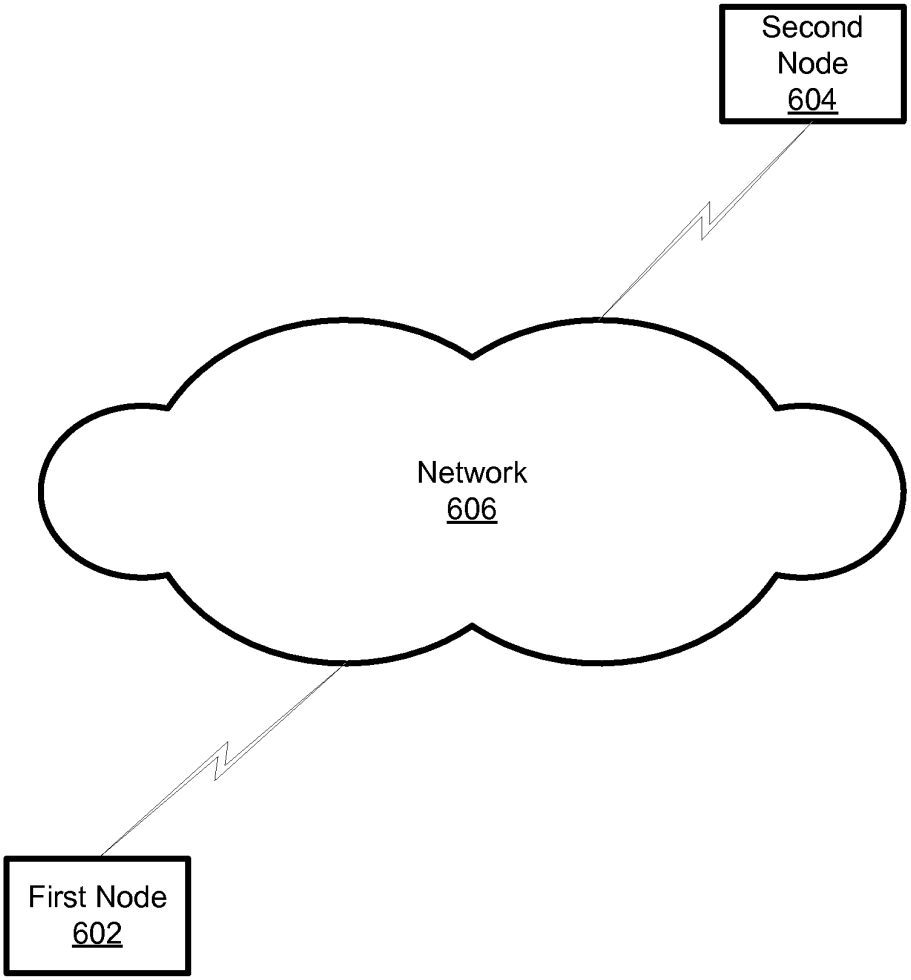

Fig. 6

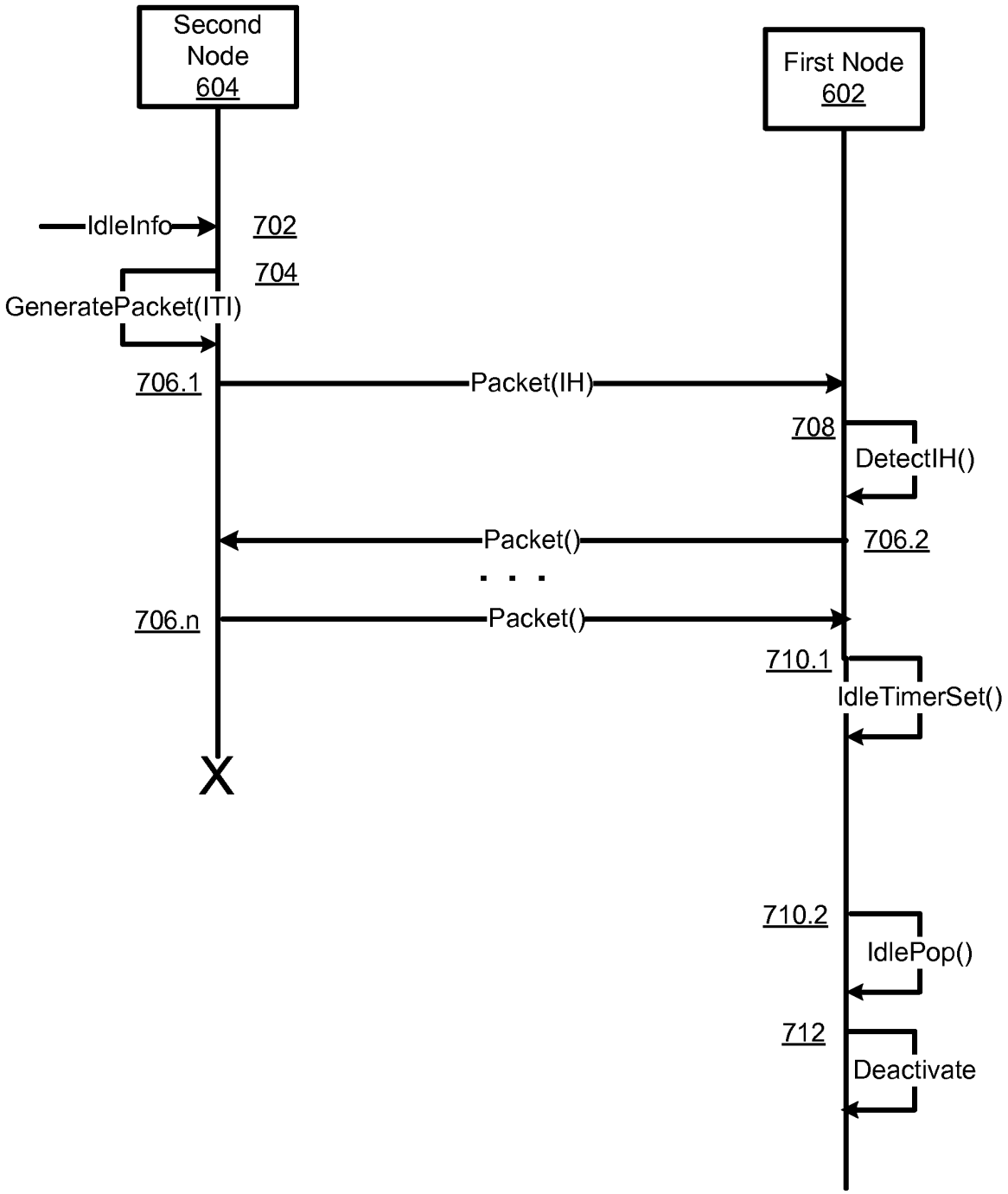
Second Node 604
First Node 602
IdleInfo
702
704
GeneratePacket(ITI)
706.1
Packet(IH)
708
DetectIH()
Packet()
706.2
706.n
Packet()
710.1
IdleTimerSet()
X
710.2
IdlePop()
712
Deactivate

Fig. 7

```
 0                   1                   2                   3
 0 1 2 3 4 5 6 7 8 9 0 1 2 3 4 5 6 7 8 9 0 1 2 3 4 5 6 7 8 9 0 1
+-+-+-+-+-+-+-+-+-+-+-+-+-+-+-+-+-+-+-+-+-+-+-+-+-+-+-+-+-+-+-+-+
|      Source Port              |       Destination Port        |
+-+-+-+-+-+-+-+-+-+-+-+-+-+-+-+-+-+-+-+-+-+-+-+-+-+-+-+-+-+-+-+-+
|                        Sequence Number                        |
+-+-+-+-+-+-+-+-+-+-+-+-+-+-+-+-+-+-+-+-+-+-+-+-+-+-+-+-+-+-+-+-+
|                    Acknowledgment Number                      |
+-+-+-+-+-+-+-+-+-+-+-+-+-+-+-+-+-+-+-+-+-+-+-+-+-+-+-+-+-+-+-+-+
| Data |           |U|A|P|R|S|F|                               |
|Offset| Reserved  |R|C|S|S|Y|I|          Window               |
|      |           |G|K|H|T|N|N|                               |
+-+-+-+-+-+-+-+-+-+-+-+-+-+-+-+-+-+-+-+-+-+-+-+-+-+-+-+-+-+-+-+-+
|       Checksum                |       Urgent Pointer          |
+-+-+-+-+-+-+-+-+-+-+-+-+-+-+-+-+-+-+-+-+-+-+-+-+-+-+-+-+-+-+-+-+
|                    Options                    |     Padding   |
+-+-+-+-+-+-+-+-+-+-+-+-+-+-+-+-+-+-+-+-+-+-+-+-+-+-+-+-+-+-+-+-+
|                               data                            |
+-+-+-+-+-+-+-+-+-+-+-+-+-+-+-+-+-+-+-+-+-+-+-+-+-+-+-+-+-+-+-+-+
```

804 806 802

```
+--------+--------+--------+--------+
|           Source Address          |
+--------+--------+--------+--------+
|         Destination Address       |
+--------+--------+--------+--------+
| zero   | PTCL   |   TCP Length    |
+--------+--------+--------+--------+
```

812 814 810

```
+--------+--------+---------+--------+
|  KIND  | Length |      ITP Data    |
+--------+--------+---------+--------+
```

822 824 820 826

Figures are adapted from RFC 793

Fig. 8

PTO/SB/01A (01-09)
Approved for use through 06/30/2010. OMB 0651-0032
U.S. Patent and Trademark Office; U.S. DEPARTMENT OF COMMERCE
Under the Paperwork Reduction Act of 1995, no persons are required to respond to a collection of information unless it displays a valid OMB control number.

DECLARATION (37 CFR 1.63) FOR UTILITY OR DESIGN APPLICATION USING AN APPLICATION DATA SHEET (37 CFR 1.76)

Title of Invention	METHODS, SYSTEMS, AND COMPUTER PROGRAM PRODUCTS FOR DETECTING AN IDLE TCP CONNECTION

As the below named inventor(s), I/we declare that:

This declaration is directed to:

☒ The attached application, or

☐ Application No. _____ filed on _____

☐ As amended on _____ (if applicable);

I/we believe that I/we am/are the original and first inventor(s) of the subject matter which is claimed and for which a patent is sought;

I/we have reviewed and understand the contents of the above-identified application, including the claims, as amended by any amendment specifically referred to above;

I/we acknowledge the duty to disclose to the United States Patent and Trademark Office all information known to me/us to be material to patentability as defined in 37 CFR 1.56, including for continuation-in-part applications, material information which became available between the filing date of the prior application and the national or PCT International filing date of the continuation-in-part application.

WARNING:

Petitioner/applicant is cautioned to avoid submitting personal information in documents filed in a patent application that may contribute to identity theft. Personal information such as social security numbers, bank account numbers, or credit card numbers (other than a check or credit card authorization form PTO-2038 submitted for payment purposes) is never required by the USPTO to support a petition or an application. If this type of personal information is included in documents submitted to the USPTO, petitioners/applicants should consider redacting such personal information from the documents before submitting them to the USPTO. Petitioner/applicant is advised that the record of a patent application is available to the public after publication of the application (unless a non-publication request in compliance with 37 CFR 1.213(a) is made in the application) or issuance of a patent. Furthermore, the record from an abandoned application may also be available to the public if the application is referenced in a published application or an issued patent (see 37 CFR 1.14). Checks and credit card authorization forms PTO-2038 submitted for payment purposes are not retained in the application file and therefore are not publicly available.

All statements made herein of my/our own knowledge are true, all statements made herein on information and belief are believed to be true, and further that these statements were made with the knowledge that willful false statements and the like are punishable by fine or imprisonment, or both, under 18 U.S.C. 1001, and may jeopardize the validity of the application or any patent issuing thereon.

FULL NAME OF INVENTOR(S)

Inventor one: Robert Paul Morris Date: 2010/02/26

Signature: [signature] Citizen of: US

Inventor two: _____ Date: _____

Signature: _____ Citizen of: _____

☐ Additional inventors or a legal representative are being named on _____ additional form(s) attached hereto.

This collection of information is required by 35 U.S.C. 115 and 37 CFR 1.63. The information is required to obtain or retain a benefit by the public which is to file (and by the USPTO to process) an application. Confidentiality is governed by 35 U.S.C. 122 and 37 CFR 1.11 and 1.14. This collection is estimated to take 1 minute to complete, including gathering, preparing, and submitting the completed application form to the USPTO. Time will vary depending upon the individual case. Any comments on the amount of time you require to complete this form and/or suggestions for reducing this burden, should be sent to the Chief Information Officer, U.S. Patent and Trademark Office, U.S. Department of Commerce, P.O. Box 1450, Alexandria, VA 22313-1450. DO NOT SEND FEES OR COMPLETED FORMS TO THIS ADDRESS. **SEND TO: Commissioner for Patents, P.O. Box 1450, Alexandria, VA 22313-1450.**

If you need assistance in completing the form, call 1-800-PTO-9199 and select option 2.

METHODS, SYSTEMS, AND COMPUTER PROGRAM PRODUCTS FOR DETECTING AN IDLE TCP CONNECTION

BACKGROUND

[0001] Various implementations of the transmission control protocol (TCP) in network nodes support a number of options that are not negotiated or even communicated between or among any of the nodes. Some of these options are included in the specification of the TCP while others are not. For example, the TCP keep-alive option is supported by a number of implementations of the TCP. It is not, however, part of the TCP specification as described in "Request for Comments" (RFC) document RFC 793 edited by John Postel, titled "Transmission Control Protocol, DARPA Internet Program Internet Protocol Specification" (September 1981), which is incorporated here in its entirety by reference. One, both, or neither node including an endpoint in a TCP connection may support a keep-alive option for the connection. Each node supports or does not support keep-alive for a TCP connection based on each node's requirements without consideration for the other node in the TCP connection.

[0002] With respect to the keep-alive option, some argue that it is unnecessary and that it can waste network bandwidth. Some of these critics point out that a keep-alive packet can bring down a TCP connection. Further, since nodes including endpoints in a TCP connection do not cooperate in supporting the keep-alive option, the nodes may

operate in opposition to one another and/or may waste resources by duplicating function, according to critics of the keep-alive option.

[0003] Proponents of the keep-alive option claim there is a benefit to detecting a dead peer/partner endpoint sooner. A node providing TCP keep-alive can also indirectly detect when a network is so congested that two nodes with endpoints in a TCP connection are effectively disconnected. Proponents argue that keep-alive can keep an inactive TCP connection open. For example, some network nodes such as firewalls are configured to close TCP connections determined to be idle or inactive in order to recover resources. Keep-alive can prevent this. This is good from the perspective of the node sending keep-alive packets, but the keep-alive packets might cause the firewall to waste resources and possibly block or terminate TCP connections with other nodes.

[0004] TCP keep-alive and the debate of its benefits and faults have been around for decades. To date no mechanism to allow two TCP connection endpoints to cooperate in supporting the keep-alive option has been proposed or implemented. The broader issue of enabling cooperation and negotiation between nodes in a TCP connection in detecting and managing idle, underactive, and/or dead TCP connections remains unaddressed.

[0005] Accordingly, there exists a need for methods, systems, and computer program products for detecting an idle TCP connection.

SUMMARY

[0006] The following presents a simplified summary of the disclosure in order to provide a basic understanding to the reader. This summary is not an extensive overview of the disclosure and it does not identify key/critical elements of the invention or delineate the scope of the invention. Its sole purpose is to present some concepts disclosed herein in a simplified form as a prelude to the more detailed description that is presented later.

[0007] Methods and systems are described for detecting an idle TCP connection. In one aspect, a method includes receiving, by a first node from a second node, a first transmission control protocol (TCP) packet in a TCP connection. The method further includes identifying a first idle time period header, in the first packet, for detecting a first idle time period during which no TCP packet including data in a first TCP data stream sent in the TCP connection from the second node is received by the first node. The method still further includes detecting the first idle time period based on the first idle time period header. The method also includes deactivating the TCP connection in response to detecting the first idle time period.

[0008] Further, a system for detecting an idle TCP connection is described. The system includes an execution environment including an instruction-processing unit configured to process an instruction included in at least one of a net in-port component, an idle time period option handler component, an idle time period monitor component, and a connection state component. The system includes the net in-port component configured for receiving, by a first node from a second node, a first transmission control

protocol (TCP) packet in a TCP connection. The system further includes the idle time period option handler component configured for identifying a first idle time period header, in the first packet, for detecting a first idle time period during which no TCP packet including data in a first TCP data stream sent in the TCP connection from the second node is received by the first node. The system still further includes the idle time period monitor component configured for detecting the first idle time period based on the first idle time period header. The system also includes the connection state component configured for deactivating the TCP connection in response to detecting the first idle time period.

[0009] In another aspect, a method for detecting an idle TCP connection is described that includes receiving, by a second node, first idle information for detecting when a TCP connection is idle. The method further includes generating a TCP packet including a first idle time period header based on the first idle information. The method still further includes sending the TCP packet in the TCP connection to the first node for detecting a first idle time period during which no TCP packet including data in a first data stream sent in the TCP connection from the second node is received by the first node.

[0010] Still further, a system for detecting an idle TCP connection is described. The system includes an execution environment including an instruction processing unit configured to process an instruction included in at least one of an idle time period policy component, a packet generator component, and a net out-port component. The system described includes the idle time period policy component configured for receiving, by a

second node, first idle information for detecting when a TCP connection is idle. The system includes the packet generator component configured for generating a TCP packet including a first idle time period header based on the first idle information. The system still further includes the net out-port component configured for sending the TCP packet in the TCP connection to the first node for detecting a first idle time period during which no TCP packet including data in a first data stream sent in the TCP connection from the second node is received by the first node.

BRIEF DESCRIPTION OF THE DRAWINGS

[0011] Objects and advantages of the present invention will become apparent to those skilled in the art upon reading this description in conjunction with the accompanying drawings, in which like reference numerals have been used to designate like or analogous elements, and in which:

[0012] Fig. 1 is a block diagram illustrating an exemplary hardware device included in and/or otherwise providing an execution environment in which the subject matter may be implemented;

[0013] Fig. 2 is a flow diagram illustrating a method for detecting an idle TCP connection according to an aspect of the subject matter described herein;

[0014] Fig. 3 is a flow diagram illustrating a method for detecting an idle TCP connection according to another aspect of the subject matter described herein;

[0015] Fig. 4 is a block a diagram illustrating an arrangement of components for detecting an idle TCP connection according to a further aspect of the subject matter described herein;

[0016] Fig. 5 is a block diagram illustrating an arrangement of components for detecting an idle TCP connection according to still another aspect of the subject matter described herein;

[0017] Fig. 6 is a network diagram illustrating an exemplary system for detecting an idle TCP connection according to an aspect of the subject matter described herein;

[0018] Fig. 7 is a message flow diagram illustrating an exemplary data and execution flow for detecting an idle TCP connection according to an aspect of the subject matter described herein; and

[0019] Fig. 8 is a diagram illustrating a structure for a packet transmitted via a network according to an aspect of the subject matter described herein.

DETAILED DESCRIPTION

[0020] An exemplary device included in an execution environment that may be configured according to the subject matter is illustrated in Fig. 1. An execution environment includes an arrangement of hardware and, optionally, software that may be further configured to include an arrangement of components for performing a method of the subject matter described herein.

[0021] An execution environment includes and/or is otherwise provided by one or more devices. An execution environment may include a virtual execution environment including software components operating in a host execution environment. Exemplary devices included in or otherwise providing suitable execution environments for configuring according to the subject matter include personal computers, notebook computers, tablet computers, servers, hand-held and other mobile devices, multiprocessor devices, distributed devices, consumer electronic devices, and/or network-enabled devices. Those skilled in the art will understand that the components illustrated in Fig. 1 are exemplary and may vary by particular execution environment.

[0022] Fig. 1 illustrates hardware device **100** included in execution environment **102** which includes instruction-processing unit (IPU) **104**, such as one or more microprocessors; physical IPU memory **106** including storage locations identified by addresses in a physical memory address space of IPU **104;** persistent secondary storage **108**, such as one or more hard drives and/or flash storage media; input device adapter **110**, such as key or keypad hardware, keyboard adapter, and/or mouse adapter; output device adapter **112**, such as a display or audio adapter for presenting information to a user; a network interface, illustrated by network interface adapter **114,** for communicating via a network such as a LAN and/or WAN; and a communication mechanism that couples elements **104-114**, illustrated as bus **116**. Elements **104-114** may be operatively coupled by various means. Bus **116** may comprise any type of bus

architecture, including a memory bus, a peripheral bus, a local bus, and/or a switching fabric.

[0023] IPU **104** is an instruction execution machine, apparatus, or device. Exemplary IPUs include one or more microprocessors, digital signal processors (DSP), graphics processing units (GPU), application-specific integrated circuits (ASIC), and/or field programmable gate arrays (FPGA).

[0024] IPU **104** may access machine code instructions and data via one or more memory address spaces in addition to the physical memory address space. A memory address space includes addresses identifying locations in an IPU memory. IPU **104** may have more than one IPU memory. Thus, IPU **104** may have more than one memory address space. IPU **104** may access a location in an IPU memory by processing an address identifying the location. The processed address may be in an operand of a machine code instruction and/or may be identified in a register or other portion of IPU **104**.

[0025] Fig. 1 illustrates virtual IPU memory **118** spanning at least part of physical IPU memory **106** and at least part of persistent secondary storage **108**. Virtual memory addresses in a memory address space may be mapped to physical memory addresses identifying locations in physical IPU memory **106**. An address space for identifying locations in a virtual IPU memory is referred to as a virtual memory address space; its addresses are referred to as virtual memory addresses; and its IPU memory is known as a virtual IPU memory or virtual memory. The term IPU memory may refer to physical

IPU memory **106** and/or virtual IPU memory **118** depending on the context in which the term is used.

[0026] Various types of memory technologies may be included in physical IPU memory **106**. Exemplary memory technologies include static random access memory (SRAM) and/or dynamic RAM (DRAM) including variants such as dual data rate synchronous DRAM (DDR SDRAM), error correcting code synchronous DRAM (ECC SDRAM), and/or RAMBUS DRAM (RDRAM). Physical IPU memory **106** may include volatile memory as illustrated in the previous sentence and/or may include nonvolatile memory such as nonvolatile flash RAM (NVRAM) and/or read-only memory (ROM).

[0027] Persistent secondary storage **108** may include one or more flash memory storage devices, one or more hard disk drives, one or more magnetic disk drives, and/or one or more optical disk drives. Persistent secondary storage may include removable media. The drives and their associated computer-readable storage media provide volatile and/or nonvolatile storage for computer readable instructions, data structures, program components, and other data for execution environment **102**.

[0028] Execution environment **102** may include software components stored in persistent secondary storage **108**, in remote storage accessible via a network, and/or in an IPU memory. Fig. 1 illustrates execution environment **102** including operating system **120**, one or more applications **122**, other program code and/or data components illustrated by other libraries and subsystems **124**.

[0029] Execution environment **102** may receive user-provided information via one or more input devices illustrated by input device **128**. Input device **128** provides input information to other components in execution environment **102** via input device adapter **110**. Execution environment **102** may include an input device adapter for a keyboard, a touch screen, a microphone, a joystick, a television receiver, a video camera, a still camera, a document scanner, a fax, a phone, a modem, a network adapter, and/or a pointing device, to name a few exemplary input devices.

[0030] Input device **128** included in execution environment **102** may be included in device **100** as Fig. 1 illustrates or may be external (not shown) to device **100**. Execution environment **102** may include one or more internal and/or external input devices. External input devices may be connected to device **100** via corresponding communication interfaces such as a serial port, a parallel port, and/or a universal serial bus (USB) port. Input device adapter **110** receives input and provides a representation to bus **116** to be received by IPU **104**, physical IPU memory **106**, and/or other components included in execution environment **102**.

[0031] Output device **130** in Fig. 1 exemplifies one or more output devices that may be included in and/or may be external to and operatively coupled to device **100**. For example, output device **130** is illustrated connected to bus **116** via output device adapter **112**. Output device **130** may be a display device. Exemplary display devices include liquid crystal displays (LCDs), light emitting diode (LED) displays, and projectors. Output device **130** presents output of execution environment **102** to one or

more users. In some embodiments, an output device is a device such as a phone, a joystick, and/or a touch screen. In addition to various types of display devices, exemplary output devices include printers, speakers, tactile output devices such as motion producing devices, and other output devices producing sensory information detectable by a user.

[0032] A device included in or otherwise providing an execution environment may operate in a networked environment communicating with one or more devices (not shown) via one or more network interfaces. The terms “communication interface” and “network interface” are used interchangeably. Fig. 1 illustrates network interface adapter **114** as a network interface included in execution environment **102** to operatively couple device **100** to a network. The terms “network node” and “node” in this document both refer to a device having a network interface operatively coupled to a network.

[0033] Exemplary network interfaces include wireless network adapters and wired network adapters. Exemplary wireless networks include a BLUETOOTH network, a wireless 802.11 network, and/or a wireless telephony network (e.g., a cellular, PCS, CDMA, and/or GSM network). Exemplary wired networks include various types of LANs, wide area networks (WANs), and personal area networks (PANs). Exemplary network adapters for wired networks include Ethernet adapters, Token-ring adapters, FDDI adapters, asynchronous transfer mode (ATM) adapters, and modems of various types. Exemplary networks also include intranets and internets such as the Internet.

[0034] Fig. 2 is a flow diagram illustrating a first method for detecting an idle TCP connection according to an exemplary aspect of the subject matter described herein. Fig. 3 is a flow diagram illustrating a second method for detecting an idle TCP connection according to an exemplary aspect of the subject matter described herein. Fig. 4a is a block diagram illustrating a system for detecting an idle TCP connection according to the first method in Fig. 2. Fig. 4b is a block diagram illustrating a system for detecting an idle TCP connection according to the second method in Fig. 3. It is expected that many, if not most, systems configured to perform one of the methods illustrated in Fig. 2 and Fig. 3 will also be configured to perform the other method.

[0035] A system for detecting an idle TCP connection according to the method illustrated in Fig. 2 includes an execution environment, such as execution environment **102** in Fig. 1**,** including an instruction-processing unit, such as IPU **104**, configured to process an instruction included in at least one of an idle time period policy component **452**, a packet generator component **454**, and a net out-port component **456** illustrated in Fig. 4a.

[0036] A system for detecting an idle TCP connection according to the method illustrated in Fig. 3 includes an execution environment, such as execution environment **102** in Fig. 1**,** including an instruction-processing unit, such as IPU **104**, configured to process an instruction included in at least one of a net in-port component **462**, an idle time period option handler component **464**, an idle time period monitor component **466**, and a connection state component **468** illustrated in Fig. 4b.

[0037] Components illustrated in Fig. 4a may be adapted for performing the method illustrated in Fig. 2 in a number of execution environments. Components illustrated in Fig. 4b may be adapted for performing the method illustrated in Fig. 3 in a number of execution environments. Fig. 5 is a block diagram illustrating adaptations and/or analogs of the components of Fig. 4a and Fig. 4b in exemplary execution environment **502** including or otherwise provided by one or more nodes. The method depicted in Fig. 2 and the method depicted in Fig. 3 may be carried out by some or all of the exemplary components and/or their analogs.

[0038] The components illustrated in Fig. 4 and Fig. 5 may be included in or otherwise may be combined with some or all of the components of Fig. 1 to create a variety of arrangements of components according to the subject matter described herein.

[0039] Fig. 6 illustrates first node **602** and second node **604** as exemplary devices included in and/or otherwise adapted for providing a suitable execution environment, such as execution environment **502** illustrated in Fig. 5, for an adaptation of the arrangement of components in Fig. 4a and an adaptation of the arrangement of components in Fig. 4b. As illustrated in Fig. 6, first node **602** and second node **604** are operatively coupled to network **606** via respective network interfaces enabling first node **602** and second node **604** to communicate**.** Fig. 7 is a message flow diagram illustrating an exemplary exchange of messages within and between first node **602** and second node **604** according to the subject matter described herein.

[0040] As stated, the various adaptations of the arrangements of components in Fig. 4a and in Fig. 4b described herein are not exhaustive.

[0041] In Fig. 5, execution environment **502** illustrates a network application **504** operating in a node configured to communicate with one or more other nodes via the TCP supported by TCP layer component **506**. For example, first node **602** may be included in and/or provide execution environment **502**. Network application **504** may be a first application configured to communicate with an application operating in second node **604** via network **606**. Second node **604** may be included in and/or provide another instance of execution environment **502**. The operation of both first node **602** and second node **604** are described with respect to execution environment **502**. For ease of illustration, both first node **602** and second node **604** are configured with an adaptation of the arrangement in Fig 4a and the arrangement in Fig. 4b. As such, the description of components and corresponding operations with respect to execution environment **502** in Fig. 5 is applicable to both first node **602** and second node **604** in Fig. 6.

[0042] In Fig. 5, network interface card (NIC) **508** is an exemplification of a network interface illustrated in Fig. 1 by network interface adapter **114**. NIC **508** includes a physical layer component **510** operatively coupling execution environment **502** to one or more physical media for carrying communication signals. The media may be wired, such as an Ethernet LAN operating over CAT 6 cabling, or may be wireless such as an 802.11n LAN. Other exemplary physical layer protocols and corresponding media are identified above.

[0043] NIC **508** may also include a portion of link layer component **512**. Link layer component **512** may provide for communication between two nodes in a point-to-point communication and/or two nodes in a local area network (LAN). Exemplary link layers and, thus, their protocols have been described above including FDDI, ATM, and Ethernet. A portion of link layer component **512** is external to NIC **508**. The external portion may be realized as a device driver for NIC **508**.

[0044] Link layer component **512** may receive data formatted as one or more internet protocol (IP) packets from internet protocol (IP) layer component **514**. Link layer component **512** packages data from IP layer component **514** according to the particular link layer protocol supported. Analogously, link layer component **512** interprets data, received as signals transmitted by the physical media operatively coupled to physical layer component **510,** according to a particular link layer protocol supported. Link layer component **512** may strip off link layer specific data and transfer the payload of link layer transmissions to IP layer component **514**.

[0045] IP layer component **514** illustrated in Fig. 5 is configured to communicate with one or more remote nodes over a LAN and/or a network of networks such as an intranet or the Internet. IP layer component **514** may receive data formatted as TCP packets from TCP layer component **506**. IP layer component **514** packages data from TCP layer component **506** into IP packets for transmission across a network. The network may be and/or may include an internet. Analogously, IP layer component **514** interprets data, received from link layer component **512** as IP protocol data and detects IP packets in

the received data. IP layer component **514** may strip off IP layer specific data and transfer the payload of one or more IP packets to TCP layer component **506**.

[0046] In Fig. 5, IP layer component **514** is operatively coupled to TCP layer component **506**. TCP layer component **506** is configured to provide a TCP connection over network **606** for sending and/or receiving packets included in the TCP connection between two nodes in network **606**, exemplified by first node **602** and second node **604**.

[0047] In a TCP connection including first node **602** and second node **604**, first node **602** may include a first TCP connection endpoint and second node **604** may include a second TCP connection endpoint. The first and second TCP connection endpoints identify the TCP connection. The TCP connection may have other identifiers, in addition to the included endpoints.

[0048] Components of execution environment **502**, in an aspect, may interoperate with TCP layer component **506** directly. In another aspect, one or more components, such as network application **504**, may interoperate with TCP layer component **506** indirectly. Network application **504** may exchange data with TCP layer component **506** via sockets component **518** and/or an analog of sockets component **518**. Alternatively or additionally, network application **504** may communicate with a remote node via an application protocol layer illustrated by application protocol layer component **520**. Many application protocols currently exist and new application protocols will be developed. Exemplary application layer protocols include hypertext transfer protocol (HTTP), file transfer protocol (FTP), and extensible messaging and presence protocol (XMPP).

[0049] TCP layer component **506** in Fig. 5 may receive data from any of various sources for transmitting in corresponding TCP connections to various corresponding identified TCP connection endpoints in one or more network nodes. Fig. 5 illustrates an interface component for receiving data to transmit in a TCP connection as application in-port (app in-port) component **522**. Fig. 5 illustrates TCP layer component **506** includes packet generator component **554** configured to package data received by application in-port component **522** for transmitting in one or more TCP packets. The one or more TCP packets are provided to IP layer component **514** via net out-port component **556** exemplifying an output interface component.

[0050] Analogously, TCP layer component **506** interprets data received from IP layer component **514** via net in-port component **562**. The data is interpreted as TCP data and TCP packets are detected in the received data by net in-port component **562** and/or packet handler component **516**. Fig. 5 illustrates TCP layer component **506** includes packet handler component **516** to strip off and/or otherwise process TCP layer specific data. Packet handler component **516** interoperates with application out-port (app out-port) component **524** to transfer data in the TCP packet included in a TCP data stream to sockets component **518**, application protocol **520**, network application **504**, and/or other components as described above associated with the local endpoint of the TCP connection. Detailed information on the operation of TCP is included in RFC 793.

[0051] With reference to the method illustrated in Fig. 2, block **202** illustrates the method includes receiving, by a second node, first idle information for detecting when a

TCP connection is idle. Accordingly, a system for detecting an idle TCP connection includes means for receiving, by a second node, first idle information for detecting when a TCP connection is idle. For example, Fig. 4a illustrates, idle time period policy component **452** is configured for receiving, by a second node, first idle information for detecting when a TCP connection is idle.

[0052] Fig. 5 illustrates idle time period (ITP) policy component **552** as an adaptation of and/or analog of ITP policy component **452** in Fig. 4a. One or more ITP policy components **552** operate in execution environment **502**. Message **702** in Fig. 7 illustrates a communication including and/or otherwise identifying idle information received by ITP policy component **552**. Message **702** may take various forms in various aspects. Exemplary forms for message **702** include a function/method invocation, a message passed via a message queue, data transmitted via a pipe, a message received via a network, and/or a communication via a shared location in IPU memory and/or secondary storage.

[0053] Idle information may be received from a configuration storage location for TCP layer component **506** in IPU memory and/or in secondary storage. The configured idle information may be maintained and/or otherwise managed by settings service component **526** configured to maintain and/or manage various options or settings for TCP layer component **506** and/or one or more TCP connections.

[0054] In an aspect, network application **504** provides idle information to ITP policy component **552** via settings service component **526** interoperating with sockets

component **518**. Sockets component **518** and/or TCP layer component **506** may support TCP options applicable globally for some or all TCP connections and/or may support TCP options on a per connection basis. Per connection TCP options may override global TCP options if global options are also supported. In another aspect, idle information may be received from and/or otherwise received based on information received from network application **504** directly, from network application **504** via application protocol layer **520**, and/or from network application **504** via sockets component **518**.

[0055] Application protocol layer **520** may provide idle information to ITP policy component **552** via settings service component **526** and, optionally, via sockets component **518**. Idle information provided by application protocol layer **520** may be based on information received from network application **504**, based on a particular configuration of application protocol layer **520**, and/or received from a user and/or administrator of one or both of network application **504** and application protocol layer **520**.

[0056] Idle information received, determined, and/or otherwise identified may include and/or identify a duration of time for detecting an idle time period. The duration may be specified according to various measures of time including seconds, minutes, hours, and/or days.

[0057] Alternatively or additionally, idle information may include and/or identify a generator for determining a duration of time for detecting an idle time period. An

exemplary generator may include a formula, an expression, a function, a policy, and/or other mechanism for generating and/or otherwise determining a duration of time.

[0058] In an aspect, one or more algorithms for generating a duration of time for detecting an idle time period may be associated with one or more corresponding identifiers. The algorithm identifiers may be standardized within a group of nodes including first node **602** and second node **604**. The received idle information may include and/or reference an algorithm identifier. First node **602** and second node **604** may each maintain one or more associations identifying an algorithm identifier and identifying a duration generator such as a function and/or a class configured to perform the identified algorithm.

[0059] A duration generator may determine a duration of time for detecting an idle time period based on one or more attributes accessible to one or both first node **602** and second node **604**. Exemplary attributes include a measure of network latency, a measure of network congestion, the availability of a particular resource, a user specified attribute, a security attribute, an energy usage attribute, a user attribute such as role of the user, and/or a measure of bandwidth supported by NIC **508** and/or a physical network medium operatively coupled to NIC **508**.

[0060] Alternatively or additionally, idle information may include a parameter such as one or more of the attributes identified in the previous paragraph for use in a duration generator for determining a duration of time for measuring and/or otherwise detecting an idle time period.

[0061] A TCP connection may be identified by its endpoints. First node **602** and/or second node **604** may include an endpoint of the TCP connection. Alternatively or additionally, either or both first node **602** or second node **604** may include a proxy endpoint representing an endpoint in a TCP connection. Nodes, that provide a network address translation (NAT) service, are exemplary nodes including proxy endpoints.

[0062] In Fig. 5, connection state component **568** may maintain state information for one or more TCP connection endpoints and/or proxy endpoints of corresponding TCP connections included in an instance of an execution environment, such as execution environment **502**, included in and/or provided by first node **602** or second node **604**.

[0063] A node including a TCP connection endpoint is referred to as a host. Hosts are typically user devices and/or servers that typically operate at the edge of a network. While endpoints of most TCP connections are not typically included in network nodes for relaying, routing, and/or otherwise forwarding TCP packet data within a network such as routing nodes and switching nodes. Such network nodes may include one or more connection endpoints for one or more respective TCP connections. It should be understood that the term “host” refers to a role played by a device in a network. First node **602** and/or second node **604** may play the role of a host in a TCP connection and/or may be proxy nodes.

[0064] A node is referred to as being in or included in a TCP connection when the node includes an endpoint of the connection and/or includes a proxy endpoint for a

connection endpoint. A proxy endpoint and an endpoint in a TCP connection may be in the same node or in different nodes.

[0065] First node **602** and/or second node **604** may play a role of a proxy node for a node including a TCP connection endpoint. First node **602** and/or second node **604** may include a proxy endpoint representing an endpoint in a TCP connection. A proxy node relays TCP packet data between a host, including a TCP connection endpoint, and another host including a corresponding connection endpoint represented by a proxy endpoint included in the proxy node. Exemplary proxy nodes, in addition to including routing and/or switching capabilities, may include a bridge, a hub, a repeater, a gateway, and a firewall.

[0066] In an aspect, a TCP keep-alive option, a TCP user timeout, a retransmission timeout, an acknowledgment timeout, and/or another timeout associated with a TCP connection may be modified based on the first idle information.

[0067] For example, in Fig. 5, ITP policy component **552** operating in second node **604** may modify an attribute of a TCP keep-alive option provided by one or more keep-alive components that may include settings service component **526**. Modifying a keep-alive attribute may include creating the attribute, deleting the attribute, and/or modifying the attribute. An attribute of a keep-alive option may be user and/or application configurable in an aspect of TCP layer component **506**. ITP policy component **552** may interoperate with settings service component **526**, connection state component **568**, and/or a keep-alive option handler component (not shown) to detect the existence and state of one or

more keep-alive attributes in determining whether a keep-alive option is active and/or in identifying its current state.

[0068] In response to identifying the idle information, ITP policy component **552** may activate, disable, and/or modify the state of the keep-alive option via interoperation with one or more of settings service component **526**, connection state component **568**, and/or a keep-alive option handler. Thus, in response to identifying the idle information, ITP policy component **552** may prevent and/or alter the time a keep-alive packet is sent by second node **604** to first node **602**.

[0069] Alternatively or additionally, ITP policy component **552** operating in second node **604** may modify an attribute associated with an acknowledgment timeout configured for TCP layer component **506**. Modifying an acknowledgment timeout attribute may include creating the attribute, deleting the attribute, and/or modifying the attribute. ITP policy component **552** may interoperate with settings service component **526**, connection state component **568**, and/or an acknowledgment option handler component (not shown) to detect the existence and state of one or more packet acknowledgment attributes. In response to identifying the idle information, ITP policy component **552** may modify the state of the packet acknowledgment option. Thus, in response to identifying the idle information, ITP policy component **552** may prevent and/or alter the time an acknowledgment is sent in a packet in a TCP connection.

[0070] Returning to Fig. 2, block **204** illustrates the method further includes generating a TCP packet including a first idle time period header based on the first idle information.

Accordingly, a system for detecting an idle TCP connection includes means for generating a TCP packet including a first idle time period header based on the first idle information. For example, Fig. 4a illustrates, packet generator component **454** is configured for generating a TCP packet including a first idle time period header based on the first idle information.

[0071] Fig. 5 illustrates packet generator component **554** as an adaptation of and/or analog of packet generator component **454** in Fig. 4a. One or more packet generator components **554** operate in execution environment **502**.

[0072] Packet generator component **554** in Fig. 5 may receive idle information and/or information based on the received idle information from ITP policy component **552**. Whether and when packet generator component **554** receives information for including an idle time period (ITP) header in a TCP packet may depend on a current state of the associated TCP connection. In Fig. 5, ITP policy component **552** may interoperate with connection state component **568** to determine whether and when to provide information to packet generator component **554** for including an ITP header in a TCP packet.

[0073] In an aspect, an ITP header may be included in a packet exchanged during setup of a TCP connection. RFC 793 describes a “three-way handshake” for establishing a TCP connection. Other message exchanges may be used in setting up a TCP connection as those skilled in the art will understand. Such other exchanges are not currently supported by the TCP as described in RFC 793. The specified “three-way handshake” and other patterns of message exchange for setting up a TCP connection

include packets that are considered to be in the TCP connection for purposes of this disclosure. Including an ITP header may be restricted to packets exchanged in connection setup, excluded from packets exchanged during connection establishment, or allowed in one or more packets exchanged during connection establishments and in packets exchanged after connection setup.

[0074] In an aspect, when connection state component **568** and/or ITP policy component **552** determine an ITP header should be included in a TCP packet based on received idle information, packet generator component **554** may include the ITP header in a next TCP packet to send to first node **602** in response to data received via application in-port component **522**. In another aspect, packet generator component **554** may send the ITP header in a TCP packet in the TCP connection with no data included in the TCP data stream sent by second node **604** to first node **602**. Such a packet is referred to as an empty TCP packet for purposes of this disclosure. Packet generator component **554** may send the empty TCP packet when TCP layer component **506** has no for data from an application in second node **604** to send in the TCP data stream to first node **602**.

[0075] Packet generator component **554** may generate a packet and may include a header identified as an ITP header in accordance with specifications for including TCP option headers in a TCP packet. See RFC 793 for more details. Fig. 8 illustrates a format or structure for a TCP packet **802** as described in RFC 793. Each "+" character in Fig. 8 indicates a bit-boundary. TCP packet **802** specifies a location and format for

including a source port **804** portion including an identifier for an endpoint of the TCP connection in a sending node and a destination port **806** including an identifier for a corresponding endpoint of the TCP connection in a receiving node. IP packet **810** illustrates a format for an IP packet header for an IP packet including TCP packet data. Source address **812** specifies a location and format in an IP header for including a network address identifying a network interface of the sending node, and destination address **814** identifying a network interface for the receiving node. A network address and a port number identify a connection endpoint in a network. Two endpoints identify a TCP connection.

[0076] Fig. 8 also illustrates a format for an exemplary ITP header **820**. A KIND location is specified for including an identifier indicating the option is an ITP header. Identifiers for option headers are currently under the control of the Internet Assigned Numbers Authority (IANA). Length field **824** identifies a length of an ITP header. An ITP data field **826** is specified for including ITP header information for detecting an idle time period as described herein. ITP data field **826**, in Fig., 8 may include and/or otherwise identify for detecting an idle time period a duration of time, a duration generator for determining a duration of time, and a parameter for use in a duration generator.

[0077] Those skilled in the art will recognize given this disclosure that an ITP header may have other suitable formats and may be included in a TCP packet in structures and locations other than those specified for TCP options in RFC 793. An equivalent or

analog of an ITP header may be included in a footer of a protocol packet in an extension and/or variant of the current TCP.

[0078] Message **704** in Fig. 7 illustrates an invocation and/or other access to packet generator component **554** for generating a TCP packet including an ITP header based on the received idle information.

[0079] Returning to Fig. 2, block **206** illustrates the method further includes sending the TCP packet in the TCP connection to the first node for detecting a first idle time period during which no TCP packet including data in a first data stream sent in the TCP connection from the second node is received by the first node. Accordingly, a system for detecting an idle TCP connection further includes means for sending the TCP packet in the TCP connection to the first node for detecting a first idle time period during which no TCP packet including data in a first data stream sent in the TCP connection from the second node is received by the first node. For example, Fig. 4a illustrates, net out-port component **456** is configured for sending the TCP packet in the TCP connection to the first node for detecting a first idle time period during which no TCP packet including data in a first data stream sent in the TCP connection from the second node is received by the first node.

[0080] Fig. 5 illustrates net out-port component **556** as an adaptation of and/or analog of net out-port component **456** in Fig. 4a. One or more net out-port components **556** operate in execution environment **502**. Net out-port component **556** is illustrated operatively coupled to packet generator component **554**. Net out-port component **556**

may receive TCP packet data from packet generator component **554** and interoperate with IP layer component **514** to send the TCP packet in one or more IP packets via network **606** to first node **602**. Message **706.1** in Fig. 7 illustrates a TCP packet including an ITP header sent by second node **604** and received by first node **602**.

[0081] In one aspect, an ITP header may be sent instead of sending one or more TCP keep-alive packets. A receiver of a packet including an ITP header, such as first node **602**, may keep a TCP connection alive based on information in the ITP header. For example, in several aspects, one or both of the nodes in a TCP connection need not send a keep-alive packet during a time period with a duration less than the duration of an idle time period.

[0082] In another aspect, a sender of a packet including an ITP header may establish a timeout attribute, analogous to a keep-alive timeout, based on the duration of the idle time period. For example, a sender may monitor a time period during which no non-empty packets are sent or received. A keep-alive option handler and/or keep-alive component (not shown) operating in second node **604** may set a keep-alive timer with a duration that will result in the timer expiring before an idle time period can occur. In response to detecting a keep-alive timeout, which may be indicated by the expiration of the keep-alive timer, the keep-alive option handler and/or keep-alive policy component may provide information to packet generator component **554** to generate a second TCP packet including a second ITP header. Content of the second ITP header may be based on the first information received, data received from first node **602**, information received

from a network application that may be from a user, and/or on any information accessible to TCP layer component **506** in execution environment **502** in second node **604**. The TCP packet generated by packet generator component **554** is provided to IP layer component **514** to send to first node **602** via network **606.** In response to receiving the message, first node **602** may reset and/or otherwise restart detection of the idle time period. Thus, a second ITP header may be sent in a second TCP packet from second node **604** to first node **602** to restart detection of the first idle time period. Alternatively, first node **602** may reset and initiate detection of an idle time period with a different duration than the previous idle time period, based on the second ITP header.

[0083] In a further aspect, second node **604** may receive second information via, for example, settings service component **526**, for resetting and/or otherwise restarting detection of an idle time period by first node **602.** The second information may be received based on input from a user of network application **504** operating in second node **604** and/or may otherwise be identified by network application **504**, sockets component **518**, and/or application protocol layer **520**. Second node **604** may generate a second TCP packet including a second ITP header based on the received second idle information as described above. Second node **604** may send the second TCP packet to first node **602** allowing first node **602** to detect an idle time period for the TCP connection based on the second ITP header.

[0084] In a further aspect, second node **604** may receive via network **606** from first node **602** a TCP packet in the TCP connection including an ITP header. Message **706.2**

in Fig. 7 illustrates a TCP packet sent by first node **602**. ITP option handler component **564** may identify the ITP header received from first node **602.** The identified ITP header may be for detecting by second node **604** an idle time period during which no TCP packet in the TCP connection is received, by second node **604**, that includes data in a second TCP data stream from first node **602**. The idle time period may be detected by ITP monitor component **566** in second node **604**. In response to detecting the idle time period, connection state component **568** may be invoked to deactivate the TCP connection. The ITP header received in the TCP packet from first node **602** may be based on the first ITP header in the first TCP packet sent in the TCP connection by second node **604** to first node **602**.

[0085] In an aspect, detection of the idle time period detected by second node **604** may include detecting a time period in the idle time period during which all data sent via the TCP connection in the TCP data stream from second node **604** to first node **602** has been acknowledged in one or TCP packets received by second node **604.**

[0086] Deactivating the TCP connection may include closing the TCP connection, sending a TCP packet to first node **602** including a reset indication, and releasing a resource previously allocated for the TCP connection by second node **604**.

[0087] With respect to the method illustrated in Fig. 3, block **302** illustrates the method includes receiving, by a first node from a second node, a first transmission control protocol (TCP) packet in a TCP connection. Accordingly, a system for detecting an idle TCP connection includes means for receiving, by a first node from a second node, a

first transmission control protocol (TCP) packet in a TCP connection. For example, Fig. 4b illustrates, net in-port component **462** is configured for receiving, by a first node from a second node, a first transmission control protocol (TCP) packet in a TCP connection.

[0088] Fig. 5 illustrates net in-port component **562** as an adaptation of and/or analog of net in-port component **462** in Fig. 4b. One or more net in-port components **562** operate in execution environment **502**.

[0089] As described above, net in-port component **562** in Fig. 5 may operate in an instance of execution environment **502** in and/or including first node **602**. The TCP packet, illustrated by message **706.1** in Fig. 7, may be received by net in-port component **562** in first node **602**. The TCP packet may include data in a first TCP data stream sent by second node **604** to first node **602** to deliver to an application interoperating with TCP layer component **506** in first node **602** such as network application **504**. Alternatively, the TCP packet may be an empty TCP packet. In an aspect described above, the received TCP packet may be a packet included in setting up the TCP connection.

[0090] Returning to Fig. 3, block **304** illustrates the method further includes identifying a first idle time period header, in the first packet, for detecting a first idle time period during which no TCP packet including data in a first TCP data stream sent in the TCP connection from the second node is received by the first node. Accordingly, a system for detecting an idle TCP connection includes means for identifying a first idle time period header, in the first packet, for detecting a first idle time period during which no TCP

packet including data in a first TCP data stream sent in the TCP connection from the second node is received by the first node. For example, Fig. 4b illustrates, idle time period option handler component **464** is configured for identifying a first idle time period header, in the first packet, for detecting a first idle time period during which no TCP packet including data in a first TCP data stream sent in the TCP connection from the second node is received by the first node.

[0091] Fig. 5 illustrates idle time period option handler component **564** as an adaptation of and/or analog of idle time period option handler component **464** in Fig. 4b. One or more idle time period option handler components **564** operate in execution environment **502**.

[0092] In Fig. 5, ITP option handler component **564** is operatively coupled to packet handler component **516**. The TCP packet, including the ITP header sent by second node **604**, may be received and identified as a TCP packet by net in-port component **562**. As illustrated in Fig. 5, net in-port component **562** and/or an analog of net in-port component **562** may provide the received packet to packet handler component **516**. Packet handler component **516** may detect various portions of the TCP packet according to its structure, illustrated in Fig. 8. Alternatively, packet handler component **516** may provide some or all of the packet to various components in TCP layer component **506** to identify portions of the packet according to the TCP specification and according to a particular implementation.

[0093] The ITP header sent by second node **604** may be received by and/or otherwise identified by ITP option handler component **564**. Message **708** in Fig. 7 exemplifies activation of ITP option handler component **564** for detecting the ITP header in the TCP packet received by first node **602** from second node **604**.

[0094] In various aspects, ITP option handler component **564** operating in first node **602** may detect and/or otherwise determine for detecting the idle time period a duration of time, a duration generator, and/or a parameter for a duration generator. The first ITP header may identify, for detecting the first idle time period, a duration of time, a generator for determining a duration of time, and/or an input for determining a duration of time.

[0095] In an aspect, ITP option handler component **564** may modify one or more attributes of a keep-alive option, a TCP user timeout, a retransmission timeout, an acknowledgment timeout, and any other timeout associated with the TCP connection, in response to identifying the ITP header. The modifying may be based on the content of the ITP header.

[0096] For example, ITP option handler component **564** may interoperate with settings service component **526**, connection state component **568**, and/or a keep-alive policy component (not shown) to detect the existence and state of one or more keep-alive attributes in determining the state of the keep-alive option and/or whether the keep-alive option is active.

[0097] In response to identifying the ITP header, ITP option handler component **564** may activate, disable, and/or modify the state of the keep-alive option via interoperation with one or more of a keep-alive policy component (not shown), settings service component **526**, and/or connection state component **568**. Thus, in response to identifying the idle information, ITP option handler component **564** may prevent and/or alter the time a keep-alive packet is sent by first node **602** to second node **604**.

[0098] Alternatively or additionally, ITP option handler component **564** may modify an attribute associated with a packet acknowledgment option provided by TCP layer component **506** in first node **602**. Modifying a packet acknowledgment attribute may include creating the attribute, deleting the attribute, and/or modifying the attribute. ITP option handler component **564** may interoperate with settings service component **526**, connection state component **568**, and/or an acknowledgment policy component (not shown) to detect the existence and state of one or more packet acknowledgment attributes. In response to identifying the idle information, ITP option handler component **564** may modify the state of the packet acknowledgment option. Thus, in response to identifying the idle information, ITP option handler component **564** may prevent and/or alter the time an acknowledgment is sent in a packet by first node **602** to second node **604** in the TCP connection.

[0099] Returning to Fig. 3, block **306** illustrates the method yet further includes detecting the first idle time period based on the first idle time period header. Accordingly, a system for detecting an idle TCP connection includes means for

detecting the first idle time period based on the first idle time period header. For example, Fig. 4b illustrates, the idle time period monitor component **466** is configured for detecting the first idle time period based on the first idle time period header.

[0100] Fig. 5 illustrates idle time period monitor component **566** as an adaptation of and/or analog of idle time period monitor component **466** in Fig. 4b. One or more idle time period monitor components **566** operate in execution environment **502**.

[0101] In an aspect, ITP option handler component **564** may provide information based on the identified ITP header to ITP policy component **552**. ITP policy component **552** may store a value representing a duration of time in a configuration storage location. Alternatively, or additionally, ITP policy component **552** may invoke a duration generator to determine a duration of time for detecting the idle time period. The duration generator may be preconfigured for the TCP connection and/or may be identified based on the ITP header in the received TCP packet. As described, the invoked generator may be invoked with a parameter included in and/or otherwise identified based on the ITP header.

[0102] ITP policy component **552** may interoperate with ITP monitor component **566** to identify the duration for detecting the idle time period. ITP monitor component **566**, in various aspects, may receive information including and/or otherwise identifying a duration of time, a duration generator, and/or a parameter for a duration generator. ITP monitor component **566** may initiate and/or restart a process for detecting an idle time

period. In an aspect, ITP monitor component **566** detects and/or otherwise identifies a beginning of a potential idle time period based on one or more specified events.

[0103] In an aspect, detecting the first idle time period by ITP monitor component **566** may include detecting a time period in the idle time period during which first node **602** has received acknowledgment for all data sent via the TCP connection in the TCP data stream by first node **602** to second node **604**. Further, the first idle time period may include a time period during which first node **602** has sent one or more TCP packets to second node **604** to acknowledge all data received in a TCP data stream in the TCP connection from second node **604** to first node **602**. Detecting the first idle time period by ITP monitor component **566** may include detecting that all received data has been acknowledged and/or that all sent data has been acknowledged.

[0104] In one aspect, lack acknowledgment for an empty packet does not delay detection of an idle time period, while in another aspect detection is not initiated while an empty packet remains unacknowledged. ITP policy component **552** may include a policy with a rule indicating that an idle time period cannot begin while a TCP packet sent by first node **602** remains unacknowledged by second node **604**. ITP policy component **552** may prevent ITP monitor component **566** from initiating detection of an idle time period while unacknowledged data exists. In a further aspect, a time duration may be associated and/or included in the policy identifying a limit to a period of waiting to receive acknowledgment of TCP packet data sent by first node **602**.

[0105] An ITP header received in a TCP packet in the TCP connection by a node from a remote node may be based on a previous ITP header identified in a TCP packet previously sent in the TCP connection by the node to the remote node. For example, the first ITP header identified in the first TCP packet received by first node **602** may be based on an ITP header included a TCP packet in the TCP connection sent by first node **602** to second node **604** prior to receiving the first TCP packet by first node **602**. The exchange of ITP headers may include a negotiation between first node **602** and second node **604.**

[0106] A duration of time may be identified and/or otherwise determined based on the ITP header identified in the TCP packet in the TCP connection received via the network. A timer may be set according to the identified duration. Detecting the first idle time period may include and/or otherwise may be based on detecting the timer expiration. ITP monitor component **566** may set a timer configured to expire in a time duration identified based on the ITP header identified in the TCP packet received from second node **604**. The identified duration may be longer, shorter, or equal to a duration of the idle time period. ITP monitor component **566** may use multiple timers. ITP monitor component **566** may recalculate and/or otherwise generate a new idle duration based on the ITP header at one or more times during detection of the idle time period. That is, the idle time period may be static and/or may be dynamic, changing based on attribute information accessible before and/or during the detection process and/or based on one or more duration generators.

[0107] Message **710.1** illustrates a call and/or other communication between ITP monitor component **566** and a timer component to set a timer included in detecting an idle time period. Prior to setting the timer, first node **602** and second node **602** may be active in exchanging TCP packets as illustrated by messages including message **706.2** through message **706.n**. Those skilled in the art will recognize that detection of an idle time period may not include explicitly and/or directly accessing a timer by ITP monitor component **566**. ITP monitor component **566** may monitor other events as a proxy or indirect mechanism for initiating detection and detecting an idle time period.

[0108] ITP monitor component **566** may detect one or more events configured to indicate an idle time period has occurred. For example, expiration of a timer or multiple associated timers may be interpreted by ITP monitor component **566** as marking an occurrence of the idle time period. Message **710.2** illustrates ITP monitor component **566** receiving information identifying expiration of a timer for detecting the idle time period.

[0109] In a further aspect, in response to detecting the expiration of a timer set as described above, a TCP keep-alive packet may be sent by the node detecting the timeout to determine whether the TCP connection is active and/or to keep the TCP connection active. When the keep-alive packet is sent, an acknowledgment timer may be sent. If a timeout of the acknowledgment timer is detected indicating no TCP packet has been received acknowledging the keep-alive packet, the first idle time period may

be detected in response to and/or otherwise based on detecting the timeout of the acknowledgment timer.

[0110] In Fig. 5, ITP policy component **552** in first node **602** may provide a duration identified based on the ITP header to ITP monitor component **566** or to a keep-alive monitor component (not shown). ITP monitor component **566** may configure a keep-alive timer to expire based on the identified duration. In response to detecting expiration of the keep-alive timer, ITP monitor component **566** may invoke packet generator component **554** to generate a TCP keep-alive packet. First node **602** may send the TCP packet to second node **604**. The TCP keep-alive packet may be sent to prevent detection of an idle time period by second node **604** and/or may otherwise be sent to detect by first node **602** whether the TCP connection is active.

[0111] First node **602** may set an acknowledgment timer associated with sending the packet. If the acknowledgment timer expires before a TCP packet is received from second node **604** acknowledging the packet sent, ITP monitor component **566** may detect the idle time period in response to and/or otherwise based on expiration of the acknowledgment timer.

[0112] Receiving a packet from second node **604** included in the TCP connection is an event that, in various aspects, may directly and/or indirectly indicate the beginning of a potential idle time period. A potential idle time period may begin at some specified point during and/or after processing a received TCP packet. In one aspect, an empty TCP packet may be received while a potential idle time period is being monitored. That is, a

beginning of the potential idle time period has been detected. In response to receiving the empty TCP packet, monitoring of the current potential time period may be aborted. Further, in response to receiving the empty TCP packet, a beginning of a next potential idle time period may be detected.

[0113] In Fig. 5, ITP policy component **552** and ITP monitor component **566** may operate to reset and/or initiate detection of an idle time period in response to receiving an empty TCP packet. First node **602** may receive an empty packet. In response, ITP monitor component **566** may receive an event and/or other indication to reset detection of an idle time period. Resetting the detecting process may be based on whether or not a received empty TCP packet matches a specified condition. ITP option handler component **564** may be configured to determine whether a received empty TCP packet matches the condition. If ITP option handler component **564** determines the empty packet matches the condition, ITP monitor component **566** may be instructed to reset and/or restart detection of the first idle time period including detecting the beginning of a next potential time period.

[0114] The condition may match received TCP packets including ITP headers and/or other TCP option headers. A condition may match a port number and/or other field in a received TCP packet. A condition may further be based on a network address in an IP header including the TCP packet.

[0115] First node **602** may receive the first TCP packet including the first ITP header after receiving a previous TCP packet including a previous ITP header. The previous

ITP header may have identified one or more durations for detecting a previous idle time period. In response to receiving the current ITP header, ITP monitor component **566** may be instructed and/or otherwise reconfigured to detect the first idle time period based on the first idle time header rather than detect the previous idle time period detected based on the previous ITP header.

[0116] ITP policy component **552** and/or ITP monitor component **566** may access information not included in the TCP packet received from second node **604** including the ITP header. The other information includes local idle information included in the implementation of TCP layer component **506**, provided by a user such as an administrator, provided by another component included in first node **602**, and/or received from a remote node other than second node **604**. For example, local idle information may identify local preferences and/or requirements for detecting an idle time period. ITP policy component **552** in first node **602** may access the local idle information and invoke and/or otherwise communicate with ITP monitor component **566**. ITP monitor component **566** may detect an idle time period based on the ITP header and the local idle information.

[0117] In a further aspect, ITP policy component **552** in first node **602** may interoperate with packet generator component **554** to send a TCP packet, in the TCP connection, including an informational ITP header from first node **602** to second node **604** identifying an idle duration for the idle time period to be detected by first node **602**.

[0118] Alternatively or additionally, first node **602** may send a TCP packet in the TCP connection to second node **604** including an instructional ITP header for detecting, based on the second ITP header, by second node **604** a second idle time period. The second ITP header may be based on the first ITP header.

[0119] The informational and instructional ITP headers may be the same header or different headers. The informational and instructional ITP headers may be sent in the same or different TCP packets. A duration identified in and/or based on the informational ITP header may be the same or a different duration identified in and/or based on the instructional ITP header.

[0120] In some aspects, first node **602** and second node **604** may continue to exchange ITP headers. Information in the exchanged ITP headers may be based on ITP headers received in the TCP connection and/or on data accessible locally to one or both of the nodes. In some aspects, the exchange may be a negotiation while in other aspects the exchange may simply be informational.

[0121] Returning to Fig. 3, block **308** illustrates the method additionally includes deactivating the TCP connection in response to detecting the first idle time period. Accordingly, a system for detecting an idle TCP connection includes means for deactivating the TCP connection in response to detecting the first idle time period. For example, Fig. 4b illustrates, the connection state component **468** is configured for deactivating the TCP connection in response to detecting the first idle time period.

[0122] Fig. 5 illustrates connection state component **568** as an adaptation of and/or analog of connection state component **468** in Fig. 4b. One or more connection state components **568** operate in execution environment **502**.

[0123] When ITP monitor component **566** in first node **602** detects an idle time period, ITP monitor component **566** may provide an indication to connection state component **568**. The indication may indicate that the idle time period for the TCP connection has been detected and/or otherwise may instruct connection state component **568** and/or other components in TCP layer component **506** to deactivate the TCP connection. Message **712** in Fig. 7 illustrates a communication to deactivate the TCP connection in response to detecting the idle time period.

[0124] Deactivating the TCP connection may include closing the TCP connection. A TCP connection may be closed using a three-way handshake packet exchange described in RFC 793. Deactivating the TCP connection may include sending a TCP packet by the detecting node to reset the TCP connection. According to RFC 793, first node **602** may send a TCP packet including a reset (RST) bit set to "1" to indicate a connection reset. Deactivating the TCP connection may include, alternatively or additionally, releasing a resource allocated for maintaining and/or activating the TCP connection.

[0125] As described herein an ITP header for detecting an idle time period for a TCP connection may serve a number of purposes. First node **602** in a TCP connection may via an ITP header inform and/or otherwise identify to second node **604** in the connection

one or more durations for detecting an idle time period. If second node **604** detects the idle time period for the TCP connection, second node **604** may treat the TCP connection as broken, dead, and/or otherwise inactive.

[0126] In another aspect, first node **602** may send an ITP header, received by second node **604**, identifying to second node **604** a time period first node **602** will monitor and if detected will treat the associated TCP connection as dead, broken, closed, and/or otherwise inactive.

[0127] In yet another aspect, a node receiving an ITP header may use the ITP header to determine a keep-alive timeout duration, an acknowledgment timeout duration, and/or some other timeout duration associated with the TCP connection including the packet with the ITP header.

[0128] Given multiple purposes, one or more types of ITP headers may be supported and/or an ITP header may be structured to support one or more of the described services. An exchange of ITP headers may be informational and/or may be included in negotiation between two nodes included in a TCP connection. When used in a negotiation, an ITP header may be included in a negotiation protocol that has an identifiable end during a portion of the existence of a TCP connection or may be included in a negotiation that may remain ongoing throughout the existence of a TCP connection. Those skilled in the art will recognize the list of services in this paragraph is not exhaustive.

[0129] It should be understood that the various components illustrated in the various block diagrams represent logical components that are configured to perform the functionality described herein and may be implemented in software, hardware, or a combination of the two. Moreover, some or all of these logical components may be combined, some may be omitted altogether, and additional components may be added while still achieving the functionality described herein. Thus, the subject matter described herein may be embodied in many different variations, and all such variations are contemplated to be within the scope of what is claimed.

[0130] To facilitate an understanding of the subject matter described above, many aspects are described in terms of sequences of actions that may be performed by elements of a computer system. For example, it will be recognized that the various actions may be performed by specialized circuits or circuitry (e.g., discrete logic gates interconnected to perform a specialized function), by program instructions being executed by one or more instruction processing units, or by a combination of both. The description herein of any sequence of actions is not intended to imply that the specific order described for performing that sequence must be followed.

[0131] Moreover, the methods described herein may be embodied in executable instructions stored in a computer readable medium for use by or in connection with an instruction execution machine, system, apparatus, or device, such as a computer-based or processor-containing machine, system, apparatus, or device. As used herein, a "computer readable medium" may include one or more of any suitable media for storing

the executable instructions of a computer program in one or more of an electronic, magnetic, optical, electromagnetic, and infrared form, such that the instruction execution machine, system, apparatus, or device may read (or fetch) the instructions from the computer readable medium and execute the instructions for carrying out the described methods. A non-exhaustive list of conventional exemplary computer readable media includes a portable computer diskette; a random access memory (RAM); a read only memory (ROM); an erasable programmable read only memory (EPROM or Flash memory); optical storage devices, including a portable compact disc (CD), a portable digital video disc (DVD), a high definition DVD (HD-DVD.TM.), a Blu-ray.TM. disc; and the like.

[0132] Thus, the subject matter described herein may be embodied in many different forms, and all such forms are contemplated to be within the scope of what is claimed. It will be understood that various details may be changed without departing from the scope of the claimed subject matter. Furthermore, the foregoing description is for the purpose of illustration only, and not for the purpose of limitation, as the scope of protection sought is defined by the claims as set forth hereinafter together with any equivalents thereof entitled to.

[0133] All methods described herein may be performed in any order unless otherwise indicated herein explicitly or by context. The use of the terms "a" and "an" and "the" and similar referents in the context of the foregoing description and in the context of the following claims are to be construed to include the singular and the plural, unless

otherwise indicated herein explicitly or clearly contradicted by context. The foregoing description is not to be interpreted as indicating any non-claimed element is essential to the practice of the subject matter as claimed.

PTO/SB/06 (12-04)

Date: **02/26/10**

Approved for use through 7/31/2006. OMB 0651-0032
U.S. Patent and Trademark Office; U.S. DEPARTMENT OF COMMERCE

Under the Paperwork Reduction Act of 1995, no persons are required to respond to a collection of information unless it displays a valid OMB control number.

PATENT APPLICATION FEE DETERMINATION RECORD

Substitute for Form PTO-875

Application or Docket Number: 12/714,063

APPLICATION AS FILED – PART I

FOR	(Column 1) NUMBER FILED	(Column 2) NUMBER EXTRA	SMALL ENTITY RATE ($)	SMALL ENTITY FEE ($)	OR	OTHER THAN SMALL ENTITY RATE ($)	OTHER THAN SMALL ENTITY FEE ($)
BASIC FEE (37 CFR 1.16(a), (b), or (c))	N/A	N/A	N/A	82		N/A	
SEARCH FEE (37 CFR 1.16(k), (i), or (m))	N/A	N/A	N/A	270		N/A	
EXAMINATION FEE (37 CFR 1.16(o), (p), or (q))	N/A	N/A	N/A	110		N/A	
TOTAL CLAIMS (37 CFR 1.16(i))	25 minus 20 =	5	x$26	130	OR	x$52	
INDEPENDENT CLAIMS (37 CFR 1.16(h))	6 minus 3 =	* 3	x$110	330		x$220	
APPLICATION SIZE FEE (37 CFR 1.16(s))	If the specification and drawings exceed 100 sheets of paper, the application size fee due is $260 ($130 for small entity) for each additional 50 sheets or fraction thereof. See 35 U.S.C. 41(a)(1)(G) and 37 CFR						
MULTIPLE DEPENDENT CLAIM PRESENT (37 CFR 1.16(j))			195			390	
			TOTAL	922		TOTAL	

* If the difference in column 1 is less than zero, enter "0" in column 2.

APPLICATION AS AMENDED – PART II

		(Column 1) CLAIMS REMAINING AFTER AMENDMENT		(Column 2) HIGHEST NUMBER PREVIOUSLY PAID FOR	(Column 3) PRESENT EXTRA	SMALL ENTITY RATE ($)	SMALL ENTITY ADDI-TIONAL FEE ($)	OR	OTHER THAN SMALL ENTITY RATE ($)	OTHER THAN SMALL ENTITY ADDI-TIONAL FEE ($)
AMENDMENT A	Total (37 CFR 1.16(i))	*	Minus	**	=	x =		OR	x =	
	Independent (37 CFR 1.16(h))	*	Minus	***	=	x =		OR	x =	
	Application Size Fee (37 CFR 1.16(s))									
	FIRST PRESENTATION OF MULTIPLE DEPENDENT CLAIM (37 CFR 1.16(j))					N/A		OR	N/A	
						TOTAL ADD'T FEE		OR	TOTAL ADD'T FEE	

		(Column 1) CLAIMS REMAINING AFTER AMENDMENT		(Column 2) HIGHEST NUMBER PREVIOUSLY PAID FOR	(Column 3) PRESENT EXTRA	RATE ($)	ADDI-TIONAL FEE ($)	OR	RATE ($)	ADDI-TIONAL FEE ($)
AMENDMENT B	Total (37 CFR 1.16(i))	*	Minus	**	=	x =		OR	x =	
	Independent (37 CFR 1.16(h))	*	Minus	***	=	x =		OR	x =	
	Application Size Fee (37 CFR 1.16(s))									
	FIRST PRESENTATION OF MULTIPLE DEPENDENT CLAIM (37 CFR 1.16(j))					N/A		OR	N/A	
						TOTAL ADD'T FEE		OR	TOTAL ADD'T FEE	

* If the entry in column 1 is less than the entry in column 2, write "0" in column 3.
** If the "Highest Number Previously Paid For" IN THIS SPACE is less than 20, enter "20".
*** If the "Highest Number Previously Paid For" IN THIS SPACE is less than 3, enter "3".
The "Highest Number Previously Paid For" (Total or Independent) is the highest number found in the appropriate box in column 1.

This collection of information is required by 37 CFR 1.16. The information is required to obtain or retain a benefit by the public which is to file (and by the USPTO to process) an application. Confidentiality is governed by 35 U.S.C. 122 and 37 CFR 1.14. This collection is estimated to take 12 minutes to complete, including gathering, preparing, and submitting the completed application form to the USPTO. Time will vary depending upon the individual case. Any comments on the amount of time you require to complete this form and/or suggestions for reducing this burden, should be sent to the Chief Information Officer, U.S. Paten and Trademark Office, U.S. Department of Commerce, P.O. Box 1450, Alexandria, VA 22313-1450. DO NOT SEND FEES OR COMPLETED FORMS TO THIS ADDRESS. **SEND TO: Commissioner for Patents, P.O. Box 1450, Alexandria, VA 22313-1450.**

If you need assistance in completing the form, call 1-800-PTO-9199 and select option 2.