UNITED STATES PATENT AND TRADEMARK OFFICE

UNITED STATES DEPARTMENT OF COMMERCE
United States Patent and Trademark Office
Address: COMMISSIONER FOR PATENTS
P.O. Box 1450
Alexandria, Virginia 22313-1450
www.uspto.gov

APPLICATION NO.	FILING DATE	FIRST NAMED INVENTOR	ATTORNEY DOCKET NO.	CONFIRMATION NO.
14/667,642	03/24/2015	Robert Paul Morris	PMOR0162B	1029

92045 7590 04/10/2018
The Caldwell Firm, LLC
PO Box 59655
Dept. SVIPGP
Dallas, TX 75229

EXAMINER
STOYNOV, STEFAN

ART UNIT	PAPER NUMBER
2116	

NOTIFICATION DATE	DELIVERY MODE
04/10/2018	ELECTRONIC

Please find below and/or attached an Office communication concerning this application or proceeding.

The time period for reply, if any, is set in the attached communication.

Notice of the Office communication was sent electronically on above-indicated "Notification Date" to the following e-mail address(es):

pcaldwell@thecaldwellfirm.com
eofficeaction@appcoll.com

PTOL-90A (Rev. 04/07)

 GOOGLE EXHIBIT 1043

Notice of Abandonment	Application No.	Applicant(s)
	14/667,642	MORRIS, ROBERT PAUL
	Examiner	**Art Unit**
	STEFAN STOYNOV	2116

-- The MAILING DATE of this communication appears on the cover sheet with the correspondence address--

This application is abandoned in view of:

1. ☒ Applicant's failure to timely file a proper reply to the Office letter mailed on *04 April 2017*.
   (a) ☐ A reply was received on _____ (with a Certificate of Mailing or Transmission dated _____), which is after the expiration of the period for reply (including a total extension of time of _____ month(s)) which expired on _____.
   (b) ☐ A proposed reply was received on _____, but it does not constitute a proper reply under 37 CFR 1.113 to the final rejection.
   (A proper reply under 37 CFR 1.113 to a final rejection consists only of: (1) a timely filed amendment which places the application in condition for allowance; (2) a timely filed Notice of Appeal (with appeal fee); or (3) if this is utility or plant application, a timely filed Request for Continued Examination (RCE) in compliance with 37 CFR 1.114. Note that RCEs are not permitted in design applications.)
   (c) ☐ A reply was received on _____ but it does not constitute a proper reply, or a bona fide attempt at a proper reply, to the non-final rejection. See 37 CFR 1.85(a) and 1.111. (See explanation in box 7 below).
   (d) ☒ No reply has been received.

2. ☐ Applicant's failure to timely pay the required issue fee and publication fee, if applicable, within the statutory period of three months from the mailing date of the Notice of Allowance (PTOL-85).
   (a) ☐ The issue fee and publication fee, if applicable, was received on _____ (with a Certificate of Mailing or Transmission dated _____), which is after the expiration of the statutory period for payment of the issue fee (and publication fee) set in the Notice of Allowance (PTOL-85).
   (b) ☐ The submitted fee of $_____ is insufficient. A balance of $_____ is due.
   The issue fee required by 37 CFR 1.18 is $_____. The publication fee, if required by 37 CFR 1.18(d), is $_____.
   (c) ☐ The issue fee and publication fee, if applicable, has not been received.

3. ☐ Applicant's failure to timely file corrected drawings as required by, and within the three-month period set in, the Notice of Allowability (PTO-37).
   (a) ☐ Proposed corrected drawings were received on _____ (with a Certificate of Mailing or Transmission dated _____), which is after the expiration of the period for reply.
   (b) ☐ No corrected drawings have been received.

4. ☐ The letter of express abandonment which is signed by the attorney or agent of record or other party authorized under 37 CFR 1.33(b). See 37 CFR 1.138(b).

5. ☐ The letter of express abandonment which is signed by an attorney or agent (acting in a representative capacity under 37 CFR 1.34) upon the filing of a continuing application.

6. ☐ The decision by the Board of Patent Appeals and Interference rendered on _____ and because the period for seeking court review of the decision has expired and there are no allowed claims.

7. ☒ The reason(s) below:

The applicant has not filed an Appeal Brief more than seven months after filing Notice of Appeal on 08/31/2017.

/STEFAN STOYNOV/
Primary Examiner, Art Unit 2116

Petitions to revive under 37 CFR 1.137, or requests to withdraw the holding of abandonment under 37 CFR 1.181, should be promptly filed to minimize any negative effects on patent term.

Electronic Patent Application Fee Transmittal

Application Number:	14667642
Filing Date:	24-Mar-2015
Title of Invention:	METHODS, SYSTEMS, AND COMPUTER PROGRAM PRODUCTS FOR SELECTING A RESOURCE BASED ON A MEASURE OF A PROCESSING COST
First Named Inventor/Applicant Name:	Robert Paul Morris
Filer:	Patrick Edgar Caldwell
Attorney Docket Number:	PMOR0162B

Filed as Small Entity

Filing Fees for Utility under 35 USC 111(a)

Description	Fee Code	Quantity	Amount	Sub-Total in USD($)
Basic Filing:				
Pages:				
Claims:				
Miscellaneous-Filing:				
Petition:				
Patent-Appeals-and-Interference:				
Post-Allowance-and-Post-Issuance:				
Extension-of-Time:				

Description	Fee Code	Quantity	Amount	Sub-Total in USD($)
Extension - 1 month with $0 paid	2251	1	100	100
Miscellaneous:				
			Total in USD ($)	**100**

Electronic Acknowledgement Receipt

EFS ID:	31098109
Application Number:	14667642
International Application Number:	
Confirmation Number:	1029
Title of Invention:	METHODS, SYSTEMS, AND COMPUTER PROGRAM PRODUCTS FOR SELECTING A RESOURCE BASED ON A MEASURE OF A PROCESSING COST
First Named Inventor/Applicant Name:	Robert Paul Morris
Customer Number:	92045
Filer:	Patrick Edgar Caldwell
Filer Authorized By:	
Attorney Docket Number:	PMOR0162B
Receipt Date:	30-NOV-2017
Filing Date:	24-MAR-2015
Time Stamp:	21:39:12
Application Type:	Utility under 35 USC 111(a)

Payment information:

Submitted with Payment	yes
Payment Type	DA
Payment was successfully received in RAM	$100
RAM confirmation Number	120117INTEFSW00007883505939
Deposit Account	
Authorized User	
The Director of the USPTO is hereby authorized to charge indicated fees and credit any overpayment as follows:	

File Listing:

Document Number	Document Description	File Name	File Size(Bytes)/ Message Digest	Multi Part /.zip	Pages (if appl.)
1	Fee Worksheet (SB06)	fee-info.pdf	30683 c32005a0f7b7b4aead81705a9f0d5516521c8f74	no	2

Warnings:

Information:

Total Files Size (in bytes):	30683

This Acknowledgement Receipt evidences receipt on the noted date by the USPTO of the indicated documents, characterized by the applicant, and including page counts, where applicable. It serves as evidence of receipt similar to a Post Card, as described in MPEP 503.

New Applications Under 35 U.S.C. 111
If a new application is being filed and the application includes the necessary components for a filing date (see 37 CFR 1.53(b)-(d) and MPEP 506), a Filing Receipt (37 CFR 1.54) will be issued in due course and the date shown on this Acknowledgement Receipt will establish the filing date of the application.
National Stage of an International Application under 35 U.S.C. 371
If a timely submission to enter the national stage of an international application is compliant with the conditions of 35 U.S.C. 371 and other applicable requirements a Form PCT/DO/EO/903 indicating acceptance of the application as a national stage submission under 35 U.S.C. 371 will be issued in addition to the Filing Receipt, in due course.
New International Application Filed with the USPTO as a Receiving Office
If a new international application is being filed and the international application includes the necessary components for an international filing date (see PCT Article 11 and MPEP 1810), a Notification of the International Application Number and of the International Filing Date (Form PCT/RO/105) will be issued in due course, subject to prescriptions concerning national security, and the date shown on this Acknowledgement Receipt will establish the international filing date of the application.

PTO/AIA/31 (03-14)
Approved for use through 07/31/2016. OMB 0651-0031
U.S. Patent and Trademark Office; U.S. DEPARTMENT OF COMMERCE
Under the Paperwork Reduction Act of 1995, no persons are required to respond to a collection of information unless it displays a valid OMB control number.

NOTICE OF APPEAL FROM THE EXAMINER TO THE PATENT TRIAL AND APPEAL BOARD

Docket Number (Optional) PMOR0162B

I hereby certify that this correspondence is being facsimile transmitted to the USPTO, EFS-Web transmitted to the USPTO, or deposited with the United States Postal Service with sufficient postage in an envelope addressed to "Commissioner for Patents, P.O. Box 1450, Alexandria, on Alexandria, VA 22313-1450" [37 CFR 1.8(a)] on 8/31/2017.

Signature /Patrick Caldwell/

Typed or printed name Patrick Caldwell

In re Application of Robert Paul Morris

Application Number	Filed
14/667,642	03-24-2015

For METHODS, SYSTEMS, AND COMPUTER PROGRAM PRODUCTS FOR SELECTING A RESOURCE...

Art Unit	Examiner
2116	STOYNOV, STEFAN

Applicant hereby **appeals** to the Patent Trial and Appeal Board from the last decision of the examiner.

The fee for this Notice of Appeal is (37 CFR 41.20(b)(1)) $ 800

☐ Applicant asserts small entity status. See 37 CFR 1.27. Therefore, the fee shown above is reduced by 50%, and the resulting fee is: $ 400

☐ Applicant certifies micro entity status. See 37 CFR 1.29. Therefore, the fee shown above is reduced by 75%, and the resulting fee is: $ _____
Form PTO/SB/15A or B or equivalent must either be enclosed or have been submitted previously.

☐ A check in the amount of the fee is enclosed.

☐ Payment by credit card. Form PTO-2038 is attached.

☑ The Director is hereby authorized to charge any fees which may be required, or credit any overpayment to Deposit Account No. 50-5939.

☐ Payment made via EFS-Web.

☐ A petition for an extension of time under 37 CFR 1.136(a) (PTO/AIA/22 or equivalent) is enclosed.
For extensions of time in reexamination proceedings, see 37 CFR 1.550.

WARNING: Information on this form may become public. Credit card information should not be included on this form. Provide credit card information and authorization on PTO-2038.

I am the

☐ applicant ☑ attorney or agent of record Registration number 44580 ☐ attorney or agent acting under 37 CFR 1.34 Registration number _____

Signature /Patrick Caldwell/

Typed or printed name Patrick Caldwell

Telephone Number 214-734-2313

Date 08/31/2017

NOTE: This form must be signed in accordance with 37 CFR 1.33. See 37 CFR 1.4 for signature requirements and certifications. Submit multiple forms if more than one signature is required, see below*.

☑ * Total of 1 forms are submitted.

This collection of information is required by 37 CFR 41.20(b)(1) and 41.31. The information is required to obtain or retain a benefit by the public which is to file (and by the USPTO to process) an application. Confidentiality is governed by 35 U.S.C. 122 and 37 CFR 1.11, 1.14 and 41.6. This collection is estimated to take 12 minutes to complete, including gathering, preparing, and submitting the completed application form to the USPTO. Time will vary depending upon the individual case. Any comments on the amount of time you require to complete this form and/or suggestions for reducing this burden, should be sent to the Chief Information Officer, U.S. Patent and Trademark Office, U.S. Department of Commerce, P.O. Box 1450, Alexandria, VA 22313-1450. DO NOT SEND FEES OR COMPLETED FORMS TO THIS ADDRESS. **SEND TO: Commissioner for Patents, P.O. Box 1450, Alexandria, VA 22313-1450.**

If you need assistance in completing the form, call 1-800-PTO-9199 and select option 2.

Privacy Act Statement

The **Privacy Act of 1974 (P.L. 93-579)** requires that you be given certain information in connection with your submission of the attached form related to a patent application or patent. Accordingly, pursuant to the requirements of the Act, please be advised that: (1) the general authority for the collection of this information is 35 U.S.C. 2(b)(2); (2) furnishing of the information solicited is voluntary; and (3) the principal purpose for which the information is used by the U.S. Patent and Trademark Office is to process and/or examine your submission related to a patent application or patent. If you do not furnish the requested information, the U.S. Patent and Trademark Office may not be able to process and/or examine your submission, which may result in termination of proceedings or abandonment of the application or expiration of the patent.

The information provided by you in this form will be subject to the following routine uses:

1. The information on this form will be treated confidentially to the extent allowed under the Freedom of Information Act (5 U.S.C. 552) and the Privacy Act (5 U.S.C 552a). Records from this system of records may be disclosed to the Department of Justice to determine whether disclosure of these records is required by the Freedom of Information Act.
2. A record from this system of records may be disclosed, as a routine use, in the course of presenting evidence to a court, magistrate, or administrative tribunal, including disclosures to opposing counsel in the course of settlement negotiations.
3. A record in this system of records may be disclosed, as a routine use, to a Member of Congress submitting a request involving an individual, to whom the record pertains, when the individual has requested assistance from the Member with respect to the subject matter of the record.
4. A record in this system of records may be disclosed, as a routine use, to a contractor of the Agency having need for the information in order to perform a contract. Recipients of information shall be required to comply with the requirements of the Privacy Act of 1974, as amended, pursuant to 5 U.S.C. 552a(m).
5. A record related to an International Application filed under the Patent Cooperation Treaty in this system of records may be disclosed, as a routine use, to the International Bureau of the World Intellectual Property Organization, pursuant to the Patent Cooperation Treaty.
6. A record in this system of records may be disclosed, as a routine use, to another federal agency for purposes of National Security review (35 U.S.C. 181) and for review pursuant to the Atomic Energy Act (42 U.S.C. 218(c)).
7. A record from this system of records may be disclosed, as a routine use, to the Administrator, General Services, or his/her designee, during an inspection of records conducted by GSA as part of that agency's responsibility to recommend improvements in records management practices and programs, under authority of 44 U.S.C. 2904 and 2906. Such disclosure shall be made in accordance with the GSA regulations governing inspection of records for this purpose, and any other relevant (*i.e.*, GSA or Commerce) directive. Such disclosure shall not be used to make determinations about individuals.
8. A record from this system of records may be disclosed, as a routine use, to the public after either publication of the application pursuant to 35 U.S.C. 122(b) or issuance of a patent pursuant to 35 U.S.C. 151. Further, a record may be disclosed, subject to the limitations of 37 CFR 1.14, as a routine use, to the public if the record was filed in an application which became abandoned or in which the proceedings were terminated and which application is referenced by either a published application, an application open to public inspection or an issued patent.
9. A record from this system of records may be disclosed, as a routine use, to a Federal, State, or local law enforcement agency, if the USPTO becomes aware of a violation or potential violation of law or regulation.

Electronic Patent Application Fee Transmittal

Application Number:	14667642
Filing Date:	24-Mar-2015
Title of Invention:	METHODS, SYSTEMS, AND COMPUTER PROGRAM PRODUCTS FOR SELECTING A RESOURCE BASED ON A MEASURE OF A PROCESSING COST
First Named Inventor/Applicant Name:	Robert Paul Morris
Filer:	Patrick Edgar Caldwell
Attorney Docket Number:	PMOR0162B

Filed as Small Entity

Filing Fees for Utility under 35 USC 111(a)

Description	Fee Code	Quantity	Amount	Sub-Total in USD($)
Basic Filing:				
Pages:				
Claims:				
Miscellaneous-Filing:				
Petition:				
Patent-Appeals-and-Interference:				
NOTICE OF APPEAL	2401	1	400	400
Post-Allowance-and-Post-Issuance:				

Description	Fee Code	Quantity	Amount	Sub-Total in USD($)
Extension-of-Time:				
Extension - 2 months with $0 paid	2252	1	300	300
Miscellaneous:				
		Total in USD ($)		**700**

Electronic Acknowledgement Receipt

EFS ID:	30247042
Application Number:	14667642
International Application Number:	
Confirmation Number:	1029
Title of Invention:	METHODS, SYSTEMS, AND COMPUTER PROGRAM PRODUCTS FOR SELECTING A RESOURCE BASED ON A MEASURE OF A PROCESSING COST
First Named Inventor/Applicant Name:	Robert Paul Morris
Customer Number:	92045
Filer:	Patrick Edgar Caldwell
Filer Authorized By:	
Attorney Docket Number:	PMOR0162B
Receipt Date:	31-AUG-2017
Filing Date:	24-MAR-2015
Time Stamp:	22:33:48
Application Type:	Utility under 35 USC 111(a)

Payment information:

Submitted with Payment	yes
Payment Type	DA
Payment was successfully received in RAM	$700
RAM confirmation Number	090117INTEFSW00007126505939
Deposit Account	
Authorized User	
The Director of the USPTO is hereby authorized to charge indicated fees and credit any overpayment as follows:	

File Listing:

Document Number	Document Description	File Name	File Size(Bytes)/ Message Digest	Multi Part /.zip	Pages (if appl.)
1	Notice of Appeal Filed	PMOR0162B_Notice_of_Appeal_vF_31-Aug-2017.pdf	127045 0580359c7318c74e0534c28ce4dac6798b51da13	no	2
Warnings:					
Information:					
2	Fee Worksheet (SB06)	fee-info.pdf	32362 05bc2bc7add5033291d025c3e2d0de192c4b8721	no	2
Warnings:					
Information:					
		Total Files Size (in bytes):	159407		

This Acknowledgement Receipt evidences receipt on the noted date by the USPTO of the indicated documents, characterized by the applicant, and including page counts, where applicable. It serves as evidence of receipt similar to a Post Card, as described in MPEP 503.

<u>New Applications Under 35 U.S.C. 111</u>
If a new application is being filed and the application includes the necessary components for a filing date (see 37 CFR 1.53(b)-(d) and MPEP 506), a Filing Receipt (37 CFR 1.54) will be issued in due course and the date shown on this Acknowledgement Receipt will establish the filing date of the application.
<u>National Stage of an International Application under 35 U.S.C. 371</u>
If a timely submission to enter the national stage of an international application is compliant with the conditions of 35 U.S.C. 371 and other applicable requirements a Form PCT/DO/EO/903 indicating acceptance of the application as a national stage submission under 35 U.S.C. 371 will be issued in addition to the Filing Receipt, in due course.
<u>New International Application Filed with the USPTO as a Receiving Office</u>
If a new international application is being filed and the international application includes the necessary components for an international filing date (see PCT Article 11 and MPEP 1810), a Notification of the International Application Number and of the International Filing Date (Form PCT/RO/105) will be issued in due course, subject to prescriptions concerning national security, and the date shown on this Acknowledgement Receipt will establish the international filing date of the application.

UNITED STATES PATENT AND TRADEMARK OFFICE
COMMISSIONER FOR PATENTS
P.O.BOX 1450
ALEXANDRIA VA 22313-1451

PRESORTED
FIRST-CLASS MAIL
U.S. POSTAGE PAID
POSTEDIGITAL
NNNNN

The Caldwell Firm, LLC
PO Box 59655
Dept. SVIPGP
Dallas, TX 75229

Courtesy Reminder for
Application Serial No: 14/667,642

Attorney Docket No: PMOR0162B
Customer Number: 92045
Date of Electronic Notification: 04/04/2017

This is a courtesy reminder that new correspondence is available for this application. If you have not done so already, please review the correspondence. The official date of notification of the outgoing correspondence will be indicated on the form PTOL-90 accompanying the correspondence.

An email notification regarding the correspondence was sent to the following email address(es) associated with your customer number:
pcaldwell@thecaldwellfirm.com
eofficeaction@appcoll.com

To view your correspondence online or update your email addresses, please visit us anytime at **https://sportal.uspto.gov/secure/myportal/privatepair.** If you have any questions, please email the Electronic Business Center (EBC) at EBC@uspto.gov or call 1-866-217-9197.

UNITED STATES PATENT AND TRADEMARK OFFICE

UNITED STATES DEPARTMENT OF COMMERCE
United States Patent and Trademark Office
Address: COMMISSIONER FOR PATENTS
P.O. Box 1450
Alexandria, Virginia 22313-1450
www.uspto.gov

APPLICATION NO.	FILING DATE	FIRST NAMED INVENTOR	ATTORNEY DOCKET NO.	CONFIRMATION NO.
14/667,642	03/24/2015	Robert Paul Morris	PMOR0162B	1029

92045 7590 04/04/2017
The Caldwell Firm, LLC
PO Box 59655
Dept. SVIPGP
Dallas, TX 75229

EXAMINER
STOYNOV, STEFAN

ART UNIT	PAPER NUMBER
2116	

NOTIFICATION DATE	DELIVERY MODE
04/04/2017	ELECTRONIC

Please find below and/or attached an Office communication concerning this application or proceeding.

The time period for reply, if any, is set in the attached communication.

Notice of the Office communication was sent electronically on above-indicated "Notification Date" to the following e-mail address(es):

pcaldwell@thecaldwellfirm.com
eofficeaction@appcoll.com

PTOL-90A (Rev. 04/07)

Office Action Summary	Application No. 14/667,642	Applicant(s) MORRIS, ROBERT PAUL	
	Examiner STEFAN STOYNOV	Art Unit 2116	AIA (First Inventor to File) Status No

-- The MAILING DATE of this communication appears on the cover sheet with the correspondence address --

Period for Reply

A SHORTENED STATUTORY PERIOD FOR REPLY IS SET TO EXPIRE 3 MONTHS FROM THE MAILING DATE OF THIS COMMUNICATION.

- Extensions of time may be available under the provisions of 37 CFR 1.136(a). In no event, however, may a reply be timely filed after SIX (6) MONTHS from the mailing date of this communication.
- If NO period for reply is specified above, the maximum statutory period will apply and will expire SIX (6) MONTHS from the mailing date of this communication.
- Failure to reply within the set or extended period for reply will, by statute, cause the application to become ABANDONED (35 U.S.C. § 133). Any reply received by the Office later than three months after the mailing date of this communication, even if timely filed, may reduce any earned patent term adjustment. See 37 CFR 1.704(b).

Status

1)☒ Responsive to communication(s) filed on *02/28/2017*.

☐ A declaration(s)/affidavit(s) under **37 CFR 1.130(b)** was/were filed on _____.

2a)☒ This action is **FINAL**. 2b)☐ This action is non-final.

3)☐ An election was made by the applicant in response to a restriction requirement set forth during the interview on _____; the restriction requirement and election have been incorporated into this action.

4)☐ Since this application is in condition for allowance except for formal matters, prosecution as to the merits is closed in accordance with the practice under *Ex parte Quayle*, 1935 C.D. 11, 453 O.G. 213.

Disposition of Claims*

5)☒ Claim(s) *20-36* is/are pending in the application.

5a) Of the above claim(s) _____ is/are withdrawn from consideration.

6)☐ Claim(s) _____ is/are allowed.

7)☒ Claim(s) *20-36* is/are rejected.

8)☐ Claim(s) _____ is/are objected to.

9)☐ Claim(s) _____ are subject to restriction and/or election requirement.

* If any claims have been determined allowable, you may be eligible to benefit from the **Patent Prosecution Highway** program at a participating intellectual property office for the corresponding application. For more information, please see http://www.uspto.gov/patents/init_events/pph/index.jsp or send an inquiry to PPHfeedback@uspto.gov.

Application Papers

10)☒ The specification is objected to by the Examiner.

11)☒ The drawing(s) filed on *03/24/2015* is/are: a)☒ accepted or b)☐ objected to by the Examiner.

Applicant may not request that any objection to the drawing(s) be held in abeyance. See 37 CFR 1.85(a).

Replacement drawing sheet(s) including the correction is required if the drawing(s) is objected to. See 37 CFR 1.121(d).

Priority under 35 U.S.C. § 119

12)☐ Acknowledgment is made of a claim for foreign priority under 35 U.S.C. § 119(a)-(d) or (f).

Certified copies:

a)☐ All b)☐ Some** c)☐ None of the:

1.☐ Certified copies of the priority documents have been received.

2.☐ Certified copies of the priority documents have been received in Application No. _____.

3.☐ Copies of the certified copies of the priority documents have been received in this National Stage application from the International Bureau (PCT Rule 17.2(a)).

** See the attached detailed Office action for a list of the certified copies not received.

Attachment(s)

1) ☐ Notice of References Cited (PTO-892)

2) ☐ Information Disclosure Statement(s) (PTO/SB/08a and/or PTO/SB/08b) Paper No(s)/Mail Date _____.

3) ☐ Interview Summary (PTO-413) Paper No(s)/Mail Date. _____ .

4) ☐ Other: _____.

The present application is being examined under the pre-AIA first to invent provisions.

Specification

The disclosure is objected to because of the following informalities:

Amended paragraphs 0001-0003 in the specification failed to identify the status of parent applications with S/N(s) 14/294,059, 13/941,502, and 13/477,402. Filing new Application Data Sheet (ADS) for such correction is suggested (see MPEP §1.78(d)(2) and §1.76(b)(5)).

Claim 36 is objected to because of the following informalities:

For the purpose of examination it is assumed that the end of claim 36 ends with "***the*** first energy store" to properly establish antecedent basis for this limitation in the claim.

Appropriate correction is required.

Double Patenting

The nonstatutory double patenting rejection is based on a judicially created doctrine grounded in public policy (a policy reflected in the statute) so as to prevent the unjustified or improper timewise extension of the "right to exclude" granted by a patent and to prevent possible harassment by multiple assignees. A nonstatutory double patenting rejection is appropriate where the conflicting claims are not identical, but at least one examined application claim is not patentably distinct from the reference claim(s) because the examined application claim is either anticipated by, or would have been obvious over, the reference claim(s). See, e.g., *In re Berg*, 140 F.3d 1428, 46

USPQ2d 1226 (Fed. Cir. 1998); *In re Goodman*, 11 F.3d 1046, 29 USPQ2d 2010 (Fed. Cir. 1993); *In re Longi*, 759 F.2d 887, 225 USPQ 645 (Fed. Cir. 1985); *In re Van Ornum*, 686 F.2d 937, 214 USPQ 761 (CCPA 1982); *In re Vogel*, 422 F.2d 438, 164 USPQ 619 (CCPA 1970); *In re Thorington*, 418 F.2d 528, 163 USPQ 644 (CCPA 1969).

A timely filed terminal disclaimer in compliance with 37 CFR 1.321(c) or 1.321(d) may be used to overcome an actual or provisional rejection based on nonstatutory double patenting provided the reference application or patent either is shown to be commonly owned with the examined application, or claims an invention made as a result of activities undertaken within the scope of a joint research agreement. See MPEP § 717.02 for applications subject to examination under the first inventor to file provisions of the AIA as explained in MPEP § 2159. See MPEP §§ 706.02(l)(1) - 706.02(l)(3) for applications not subject to examination under the first inventor to file provisions of the AIA. A terminal disclaimer must be signed in compliance with 37 CFR 1.321(b).

The USPTO Internet website contains terminal disclaimer forms which may be used. Please visit www.uspto.gov/patent/patents-forms. The filing date of the application in which the form is filed determines what form (e.g., PTO/SB/25, PTO/SB/26, PTO/AIA/25, or PTO/AIA/26) should be used. ***A web-based eTerminal Disclaimer may be filled out completely online using web-screens. An eTerminal Disclaimer that meets all requirements is auto-processed and approved immediately upon submission. For more information about eTerminal Disclaimers, refer to www.uspto.gov/patents/process/file/efs/guidance/eTD-info-I.jsp.***

Claims 20-36 are rejected on the ground of nonstatutory double patenting as being unpatentable over claims 3-16 of U.S. Patent No. 8,745,418. Although the claims at issue are not identical, they are not patentably distinct from each other because all claim limitations of claims 20, 23, and 25-36 are disclosed in respective claims 16 and 3-15 of U.S. Patent No. 8,745,418.

"Generally, an obviousness-type double patenting analysis entails two steps. First, as a matter of law, a court construes the claim in the earlier patent and the claim in the later patent and determines the differences. Georgia-Pacific Corp. v. United States Gypsum Co., 195 F.3d 1322, 1326, 52, USPQ2d 1590, 1593 (Fed. Cir. 1999). Second, the court determines whether the differences in the subject matter between the two claims render the claims patentably distinct. Id. at 1327, 52 USPQ2d at 1595. A later claim that is not patentably distinct from an earlier claim in a commonly owned patent is invalid for obvious-type double patenting. In re Berg, 140 F.3d 1428, 1431,46 USPQ2d 1226, 1229 (Fed. Cir. 1998). A later patent claim is not patentably distinct from an earlier parent claim if the later claim is obvious over, **or anticipated by**, the patent claim. In re Longi, 759 F.2d at 896, 255 USPQ at 651 (affirming a holding of obviousness-type double patenting where a patent application claim to a genus is anticipated by a patent claim to a species within that genus)." Eli Lilly and Company v Barr Laboratories, Inc., United States Court of Appeals for the Federal Circuit, On petition for Rehearing en banc (decided: May 30, 2001).

Claims 21, 22, and 24, being dependent on claim 20, are rejected based on the same ground of rejection.

Claim Rejections - 35 USC § 101

35 U.S.C. 101 reads as follows:

> Whoever invents or discovers any new and useful process, machine, manufacture, or composition of matter, or any new and useful improvement thereof, may obtain a patent therefor, subject to the conditions and requirements of this title.

Claims 20-36 are rejected under 35 U.S.C. 101 because the claimed invention is directed to a judicial exception (i.e., a law of nature, a natural phenomenon, or an abstract idea) without significantly more. Independent claim 20 is directed to an idea of itself of receiving, monitoring, and analyzing/comparing data, followed by identifying the

compared data. For instance, in *Electric Power Group,* the concept of collecting information, analyzing the collected information, and displaying certain results of the collection and analysis were found to be abstract.

In analyzing claim 20 of the instant application, the limitations "receiving resource information (data) identifying a first resource (data) and a second resource (data) for processing by a program component; determining at least one of a first measure of a specified processing cost (analyzing data) for the processing of the first resource and a second measure of the processing cost (analyzing data) for the processing of the second resource; selecting one of the first resource (data) and the second resource (data) based on the at least one of the first measure and the second measure (comparing data); and identifying, to the program component, the selected one of the first resource and the second resource for processing (identifying the compared data)" are directed to an abstract idea. The abstract idea of the instant application is substantially similar to the court identified abstract idea found in *Electric Power Group*.

The additional elements recited in claim 20, "computer code" and "wherein at least one of the receiving the resource information, the determining at least one of the first measure and the second measure, the selecting the one of the first resource and the second resource, and the identifying the selected one of the first resource and the second resource is performed in response to a change in at least one of a rate of energy utilization, a user, a geospatial location, or light" are well-known and conventional/generic computer terms and computer functions for data manipulation in response to condition – i.e. the recited language for "receiving the resource information,

the determining at least one of the first measure and the second measure, the selecting the one of the first resource and the second resource, and the identifying the selected one of the first resource and the second resource is performed in response to a change in at least one of a rate of energy utilization, a user, a geospatial location, or light" merely indicates the condition without adding anything significant to the abstract idea itself. Therefore, the claimed invention as a whole does not amount to significantly more than the abstract idea.

Dependent claims 21-36 recite no additional limitation that would amount to significantly more than the abstract idea defined in independent claim 20.

Accordingly, for the reasons provided above, claims 20-36 are directed to an abstract idea, hence, not patent eligible under 35 U.S.C. 101.

Claim Rejections - 35 USC § 103

The following is a quotation of pre-AIA 35 U.S.C. 103(a) which forms the basis for all obviousness rejections set forth in this Office action:

> (a) A patent may not be obtained though the invention is not identically disclosed or described as set forth in section 102, if the differences between the subject matter sought to be patented and the prior art are such that the subject matter as a whole would have been obvious at the time the invention was made to a person having ordinary skill in the art to which said subject matter pertains. Patentability shall not be negatived by the manner in which the invention was made.

Claims 20-36 is/are rejected under pre-AIA 35 U.S.C. 103(a) as being unpatentable over Zwernemann et al., US Patent Appl. Pub. No. 2007/0211743 in view of Fadell, US Patent Appl. Pub. No. 2010/0010857.

Regarding claim 20, Zwernemann discloses a computer program product embodied on a non-transitory computer readable medium, for selecting a resource based on a measure of a processing cost (FIG(s) 1-4), comprising:

computer code for receiving resource information identifying a first resource and a second resource for processing by a program component (paragraph 0039);

computer code for determining at least one of a first measure of a specified processing cost for the processing of the first resource and a second measure of the processing cost for the processing of the second resource (paragraphs 0040-0041);

computer code for selecting one of the first resource and the second resource based on the at least one of the first measure and the second measure (paragraphs 0042-0046); and

computer code for identifying, to the program component, the selected one of the first resource and the second resource for processing (paragraphs 0045-0049).

Zwernemann does not specifically state his disclosed functionality wherein at least one of the receiving the resource information, the determining at least one of the first measure and the second measure, the selecting the one of the first resource and the second resource, and the identifying the selected one of the first resource and the second resource (as indicated above) is performed in response to a change in at least one of a rate of energy utilization, a user, a geospatial location, or light.

Fadell teaches systems and methods for controlling the performance of electronic device operations based on the power cost associated with the operations (paragraph 0004) similar to Applicant's invention. Fadell further teaches each process or operation requiring different amounts of resources, wherein based on determination of the power cost, certain processes (i.e. with corresponding resources) are scheduled or postponed (upon selection) for later execution (paragraphs 0005-0012, 0040-0068,

FIG (s) 1-9). Furthermore, Fadell teaches the criteria for different power cost based on whether the device utilizes sunlight or operates at night (i.e. responsive to changes in light – paragraph 0006, lines 11-12, paragraph 0040, lines 6-12). In addition, Fadell teaches defining the power cost based on group or tier of consumers (i.e. based on change of/different user(s)/consumer(s) – paragraph 0006, lines 7-9, paragraph 0043, lines 2-4). Fadell also teaches when determining the expected or projected power requirements of the one or more processes, determining which electronic device components will be used to perform the process, and how long each component will be in use (i.e. rate of energy utilization – paragraph 0045, lines 4-10). In Fadell, the determination of power cost provides for proper scheduling for the resource's power utilization (paragraphs 0002, 0012, and 0068-0071). Thus, saving power and cost for the user (paragraph 0003).

It would have been obvious to one of ordinary skill in the art at the time of applicant's invention to use the above described system and method, as suggested by Fadell with the method disclosed by Zwernemann in order to implement wherein at least one of the receiving the resource information, the determining at least one of the first measure and the second measure, the selecting the one of the first resource and the second resource, and the identifying the selected one of the first resource and the second resource is performed in response to a change in at least one of a rate of energy utilization, a user, a geospatial location, or light. One of ordinary skill in the art would be motivated to do so in order to save power and cost for the user.

Regarding claim 21, Zwernemann further discloses the computer program product wherein at least a portion of the resource information is received in response to processing the first resource by the program component (paragraph 0039).

Regarding claim 22, Fadell further teaches the computer program product wherein the processing cost is measured based on energy received from at least one of a battery and an energy source for charging a battery (paragraphs 0010, 0036, and 0037).

Regarding claim 23, Zwernemann further discloses the computer program product wherein the at least one of the first measure and the second measure includes at least one of a measure of electrical power, a measure of electrical energy, a measure of stored energy, a measure of mechanical resistance, a measure or electrical resistance, a measure of time, a count of a particular event, a measure of monetary cost, a measure of heat, a measure of light, a measure of distance, a measure of mass, a measure of size, or a measure of weight (paragraphs 0016, 0017, and 0047).

Regarding claim 24, Zwernemann further discloses the computer program product, as per claim 23, wherein the count is based on at least one of processor cycles, disk spins, data read operations, data write operations, refreshes of at least a portion of a presentation space, display refreshes, data transmitted via a network, data received via a network, or a measure of human movement (paragraphs 0016, 0017, and 0047).

Regarding claim 25, Zwernemann further discloses the computer program product wherein a metric for measuring the processing cost is determined based on at

least one of the first resource, the second resource, and operation, a hardware component, the program component, a user, a group, a role, a task, a time, a location, a device performing the operation, or a device for providing the resource (paragraphs 0020-0049, FIG(s) 3 and 4).

Regarding claim 26, Faddell further teaches the computer program product wherein at least one of the first measure and the second measure is determined in response to a user input for measuring the processing cost (paragraphs 0050-0063, FIG(s) 2-6).

Regarding claim 27, Zwernemann further discloses the computer program product wherein determining at least one of the first measure and the second measure is based on a previous determination of a measure of a processing cost (paragraph 0018).

Regarding claim 28, Zwernemann further discloses the computer program product wherein determining at least one of the first measure and the second measure ids based on locating a predefined measure based on at least one of the first resource, the second resource, or the program component (paragraphs 0020-0049, FIG(s) 3 and 4).

Regarding claim 29, Fadell further teaches the computer program product wherein determining at least one of the first measure and the second measure comprises:

computer code for sending a message via a network to a node for determining at least one of the first measure and the second measure; and

computer code for receiving a response via the network identifying at least one of the first measure and the second measure (paragraphs 0010, 0011, 0047, and 0048).

Regarding claim 30, Zwernemann further discloses the computer program product wherein the selecting comprises:

computer code for comparing the first measure and the second measure; and

computer code for selecting one of the first resource and the second resource based on the comparing (paragraphs 0018-0049, FIG(s) 2-4).

Regarding claim 31, Fadell further teaches the computer program product wherein the selecting comprises:

computer code for communicating with an output device to present a first selectable representation of the first resource and a second selectable representation of the second resource to a user;

computer code for receiving selection information identifying one of the first resource and the second resource, in response to a detected user input; and

computer code for selecting the identified resource (paragraphs 0050-0063, FIG(s) 2-6).

Regarding claim 32, Zwernemann further discloses the computer program product wherein the selected one of the first resource and the second resource is identified to the program component for processing instead the not selected one of the first resource and the second resource currently being used (paragraphs 0044-0049).

Regarding claim 33, Zwernemann further discloses the computer program product wherein the selected one of the first resource and the second resource is

identified to the program component for processing in addition to the not selected one of the first resource and the second resource currently being processed by the program component (paragraphs 0044-0049).

Regarding claim 34, Zwernemann further discloses the computer program product wherein identifying the selected one of the first resource and the second resource to the program component comprises:

computer code for disabling access, for the program component, to the not selected one of the first resource and the second resource; and

computer code for enabling access, for the program component, to the selected one of the first and the second resources (paragraphs 0044-0049).

Regarding claim 35, Zwernemann further discloses the computer program product wherein identifying the selected one of the first resource and the second resource to the program component comprises:

computer code for providing for terminating at least one of the program component and a processing of an unselected one of the first resource and the second resource by the program component; and

computer code for subsequently at least one of restarting the program component configured to process the selected one of the first resource and the second resource and starting processing to process the selected one of the first resource and the second resource (paragraphs 0044-0049).

Regarding claim 36, Fadell further teaches the computer program product wherein at least one of receiving the resource information, determining at last one of the

first measure and the second measure, selecting the one of first resource and the second resource, and identifying the selected one of the first resource and the second resource is performed in response to at least one of detecting a change in a first energy source, receiving energy from a first energy source then receiving energy from a second energy source, detecting that energy is flowing to a first source increasing the amount of energy stored in the first source, and detecting a change in an amount of energy available from the first energy source (paragraphs 0011, 0036, and 0056).

Response to Arguments

Applicant's arguments filed 02/28/2017 have been fully considered but they are not persuasive.

With respect to the double-patenting rejection, it is noted that the rejection is not provisional because it is based on conflicting claims in the instant application and a patent (US Patent No. 8,745,418 – refer to MPEP 804, CHART II-B_FIT). The double-patenting rejection for claims 20-36 is maintained, as indicated in this Office action.

The Applicant failed to address in detail the pending rejection under 35 U.S.C 101, but merely made a statement that the amendment filed 02/28/2017 overcomes the rejection(s). The rejection of claims 20-36 under 35 U.S.C 101, as directed to an abstract idea without significantly more is maintained, as indicated above in the Office action.

Regarding claim 20, the Applicant's argument that the Fadell reference does not disclose language from former claim 18, incorporated into claim 20 – i.e. the receiving, determining, selecting, and identifying steps in claim 20 "is performed in response to a

change in at least one of rate of energy utilization, a user, a geospatial location, or light" is not persuasive.

The examiner disagrees. Fadell discloses the above-argued claim language in paragraph 0006, lines 7-9, lines 11-12, paragraph 0040, lines 6-12, paragraph 0043, lines 2-4, and paragraph 0045, lines 4-10 (as indicated above under the rejection of clam 20). Thus, claims 20-36 stand rejected under 35 U.S.C. 103(a).

Conclusion

Applicant's amendment necessitated the new ground(s) of rejection presented in this Office action. Accordingly, **THIS ACTION IS MADE FINAL**. See MPEP § 706.07(a). Applicant is reminded of the extension of time policy as set forth in 37 CFR 1.136(a).

A shortened statutory period for reply to this final action is set to expire THREE MONTHS from the mailing date of this action. In the event a first reply is filed within TWO MONTHS of the mailing date of this final action and the advisory action is not mailed until after the end of the THREE-MONTH shortened statutory period, then the shortened statutory period will expire on the date the advisory action is mailed, and any extension fee pursuant to 37 CFR 1.136(a) will be calculated from the mailing date of the advisory action. In no event, however, will the statutory period for reply expire later than SIX MONTHS from the date of this final action.

Any inquiry concerning this communication or earlier communications from the examiner should be directed to STEFAN STOYNOV whose telephone number is (571)272-4236. The examiner can normally be reached on 8:30AM-5:00PM.

Examiner interviews are available via telephone, in-person, and video conferencing using a USPTO supplied web-based collaboration tool. To schedule an interview, applicant is encouraged to use the USPTO Automated Interview Request (AIR) at http://www.uspto.gov/interviewpractice.

If attempts to reach the examiner by telephone are unsuccessful, the examiner's supervisor, Kim Huynh can be reached on (571) 272-4147. The fax phone number for the organization where this application or proceeding is assigned is 571-273-8300.

Information regarding the status of an application may be obtained from the Patent Application Information Retrieval (PAIR) system. Status information for published applications may be obtained from either Private PAIR or Public PAIR. Status information for unpublished applications is available through Private PAIR only. For more information about the PAIR system, see http://pair-direct.uspto.gov. Should you have questions on access to the Private PAIR system, contact the Electronic Business Center (EBC) at 866-217-9197 (toll-free). If you would like assistance from a USPTO Customer Service Representative or access to the automated information system, call 800-786-9199 (IN USA OR CANADA) or 571-272-1000.

/STEFAN STOYNOV/
Primary Examiner, Art Unit 2116

Index of Claims	Application/Control No.	Applicant(s)/Patent Under Reexamination
	14667642	MORRIS, ROBERT PAUL
	Examiner	**Art Unit**
	STEFAN STOYNOV	2116

✓	Rejected	-	Cancelled	N	Non-Elected	A	Appeal
=	Allowed	÷	Restricted	I	Interference	O	Objected

☐ Claims renumbered in the same order as presented by applicant ☐ CPA ☐ T.D. ☐ R.1.47

CLAIM		DATE								
Final	Original	11/23/2016	03/29/2017							
	1	✓	-							
	2	✓	-							
	3	✓	-							
	4	✓	-							
	5	✓	-							
	6	✓	-							
	7	✓	-							
	8	✓	-							
	9	✓	-							
	10	✓	-							
	11	✓	-							
	12	✓	-							
	13	✓	-							
	14	✓	-							
	15	✓	-							
	16	✓	-							
	17	✓	-							
	18	✓	-							
	19	✓	-							
	20	✓	✓							
	21		✓							
	22		✓							
	23		✓							
	24		✓							
	25		✓							
	26		✓							
	27		✓							
	28		✓							
	29		✓							
	30		✓							
	31		✓							
	32		✓							
	33		✓							
	34		✓							
	35		✓							
	36		✓							

PATENT

IN THE UNITED STATES PATENT AND TRADEMARK OFFICE

In re application of:	Confirmation No.: 1029
Robert Paul Morris	Examiner: STOYNOV, STEFAN
Application No.: 14/667,642	Art Unit: 2116
Filed: 3-24-2015	Atty. Docket No.: PMOR0162B
For: METHODS, SYSTEMS, AND COMPUTER PROGRAM PRODUCTS FOR SELECTING A RESOURCE BASED ON A MEASURE OF A PROCESSING COST	Date: 2/28/2017

AMENDMENT A

MS Missing Parts
Commissioner for Patents
P.O. Box 1450
Alexandria, VA 22313-1450

Sir:

In response to the Notice to Office Action dated 11/30/2016, please enter the following amendments believed to place the claims in condition for allowance.

AMENDMENTS TO THE SPECIFICATION

Please amend Paragraphs [0001]-[0003] of the Specification as follows:

[0001] This application claims the benefit of U.S. Provisional Patent Application No. 62/137,173 filed 3-23-2015 and is a continuation-in-part of, and claims priority to U.S. Patent Application No. 14/294,059, entitled "METHODS, SYSTEMS, AND COMPUTER PROGRAM PRODUCTS FOR SELECTING A RESOURCE BASED ON A MEASURE OF A PROCESSING COST," filed 06-02-2014 which in turn claims priority to U.S. Patent Application No. 12/857,851, now U.S. Patent No. 8,745,418, entitled "METHODS, SYSTEMS, AND COMPUTER PROGRAM PRODUCTS FOR SELECTING A RESOURCE BASED ON A MEASURE OF A PROCESSING COST," filed 08-17-2010, which are each incorporated herein by reference in their entirety for all purposes.

[0002] Additionally, this application is a continuation-in-part of, and claims priority to U.S. Patent Application No. 13/941,502, entitled "METHODS, SYSTEMS, AND COMPUTER PROGRAM PRODUCTS FOR PROCESSING A NON-RETURNABLE COMMAND RESPONSE BASED ON A MARKUP ELEMENT," filed 07-14-2013 which in turn claims priority to U.S. Patent Application No. 12/789,550, now U.S. Patent No. 8,577,958, entitled "METHODS, SYSTEMS, AND COMPUTER PROGRAM PRODUCTS FOR PROCESSING A NON-RETURNABLE COMMAND RESPONSE BASED ON A MARKUP ELEMENT," filed 05-28-2010, which are each incorporated herein by reference in their entirety for all purposes.

[0003] Additionally, this application is a continuation-in-part of, and claims priority to U.S. Patent Application No. 13/477,402, entitled "METHODS, SYSTEMS, AND COMPUTER PROGRAM PRODUCTS FOR SHARING INFORMATION FOR DETECTING AN IDLE TCP CONNECTION," filed 05-22-2012 which in turn claims priority to U.S. Patent Application No. 12/714,454, now U.S. Patent No. 8,219,606, entitled "METHODS, SYSTEMS, AND COMPUTER PROGRAM PRODUCTS FOR SHARING INFORMATION FOR DETECTING AN IDLE TCP CONNECTION," filed 02-27-2010, which are each incorporated herein by reference in their entirety for all purposes.

AMENDMENTS TO THE CLAIMS

Amended claims follow:

1-19. (Cancelled)

20. (Currently Amended) A ~~computer readable medium embodying a~~ computer program product embodied on a non-transitory computer readable medium, ~~executable by a machine,~~ for selecting a resource based on a measure of a processing cost, ~~the computer program~~ comprising ~~executable instructions for~~:

computer code for receiving resource information identifying a first resource and a second resource for processing by a program component;

computer code for determining at least one of a first measure of a specified processing cost for the processing of the first resource and a second measure of the processing cost for the processing of the second resource;

computer code for selecting one of the first resource and the second resource based on the at least one of the first measure and the second measure; and

computer code for identifying, to the program component, the selected one of the first resource and the second resource for processing;

wherein at least one of the receiving the resource information, the determining at least one of the first measure and the second measure, the selecting the one of the first resource and the second resource, and the identifying the selected one of the first resource and the second resource is performed in response to a change in at least one of a rate of energy utilization, a user, a geospatial location, or light.

21. (New) The computer program product of claim 20 wherein at least a portion of the resource information is received in response to processing the first resource by the program component.

22. (New) The computer program product of claim 20 wherein the processing cost is measured based on energy received from at least one of a battery and an energy source for charging a battery.

23. (New) The computer program product of claim 20 wherein the at least one of the first measure and the second measure includes at least one of a measure of electrical power, a measure of electrical energy, a measure of stored energy, a measure of mechanical resistance, a measure of electrical resistance, a measure of time, a count of a particular event, a measure of a monetary cost, a measure of heat, a measure of light, a measure of distance, a measure of mass, a measure of size, or a measure of weight.

24. The computer program product of claim 23 wherein the count is based on at least one of processor cycles, disk spins, data read operations, data write operations, refreshes of at least a portion of a presentation space, display refreshes, data transmitted via a network, data received via a network, or a measure of human movement.

25. (New) The computer program product of claim 20 wherein a metric for measuring the processing cost is determined based on at least one of the first resource, the second resource, an operation, a hardware component, the program component, a user, a group, a role, a task, a time, a location, a device for performing the operation, or a device for providing the resource.

26. (New) The computer program product of claim 20 wherein at least one of the first measure and the second measure is determined in response to a user input for measuring the processing cost.

27. (New) The computer program product of claim 20 wherein determining at least one of the first measure and the second measure is based on a previous determination of a measure of a processing cost.

28. (New) The computer program product of claim 20 wherein determining at least one of the first measure and the second measure is based on locating a predefined measure based on at least one of the first resource, the second resource, or the program component.

29. (New) The computer program product of claim 20 wherein determining at least one of the first measure and the second measure comprises:

computer code for sending a message via a network to a node for determining at least one of the first measure and the second measure; and

computer code for receiving a response via the network identifying at least one of the first measure and the second measure.

30. (New) The computer program product of claim 20 wherein the selecting comprises:

computer code for comparing the first measure and the second measure; and

computer code for selecting one of the first resource and the second resource based on the comparing.

31. (New) The computer program product of claim 20 wherein in the selecting comprises:

computer code for communicating with an output device to present a first selectable representation of the first resource and a second selectable representation of the second resource to a user;

computer code for receiving selection information identifying one of the first resource and the second resource, in response to a detected user input: and

computer code for selecting the identified resource.

32. (New) The computer program product of claim 20 wherein the selected one of the first resource and the second resource is identified to the program component for processing instead the not selected one of the first resource and the second resource currently being processed by the program component.

33. (New) The computer program product of claim 20 wherein the selected one of the first resource and the second resource is identified to the program component for processing in

addition to the not selected one of the first resource and the second resource currently being processed by the program component.

34. (New) The computer program product of claim 20 wherein identifying the selected one of the first resource and the second resource to the program component comprises:

computer code for disabling access, for the program component, to the not selected one of the first resource and the second resource; and

computer code for enabling access, for the program component, to the selected one of the first resource and the second resource.

35. (New) The computer program product of claim 20 wherein identifying the selected one of the first resource and the second resource to the program component comprises:

computer code for providing for terminating at least one of the program component and a processing of an unselected one of the first resource and the second resource by the program component; and

computer code for subsequently at least one of restarting the program component configured to process the selected one of the first resource and the second resource and starting processing to process the selected one of the first resource and the second resource.

36. (New) The computer program product of claim 20 wherein at least one of receiving the resource information, determining at least one of the first measure and the second measure, selecting the one of first resource and the second resource, and identifying the selected one of the first resource and the second resource is performed in response to at least one of detecting a change in a first energy source, receiving energy from a first energy source then receiving energy from a second energy source, detecting that energy is flowing to a first source increasing the amount of energy stored in the first source, and detecting a change in an amount of energy available from a first energy source.

REMARKS

The Examiner has objected to the Specification due to informalities. Applicant respectfully asserts that such objection is overcome by virtue of the amendments to the Specification. No new matter has been added.

The Examiner has stated that the claim limitations of Claim 19 invokes 35 U.S.C. 112(f). Applicant respectfully disagrees. Nevertheless, in the spirit of expediting prosecution, such objection is deemed overcome by virtue of the amendments made hereinabove.

The Examiner has provisionally rejected Claims 1-20 on the ground of nonstatutory obviousness-type double patenting as being unpatentable over claims 1 and 3-18 of U.S. Patent No. 8,745,418. Because this is a provisional rejection, Applicant respectfully submits that filing a Terminal Disclaimer is not presently necessary, and that a Terminal Disclaimer may be filed, if necessary, at the appropriate time, e.g., if and when the obviousness type double patenting rejection is the only remaining rejection in this application. See MPEP § 804(I)(B)(I).

The Examiner has rejected Claims 1-20 under 35 U.S.C. 101. Such rejection is deemed overcome by virtue of the amendments made hereinabove.

The Examiner has rejected Claims 1, 2, 4-6, 8, 9, 11, 13-16, 19, and 20 under 35 U.S.C. 102(b) as being anticipated by Zwernemann et al. (U.S. Patent Publication No. 2007/0211743) Further, the Examiner has rejected Claims 3, 7, 10, 12, 17, and 18 under 35 U.S.C. 103(a) as being unpatentable over Zwernemann in view of Fadell (U.S. Patent Publication No. 2010/0010857).

With respect to the subject matter of former Claim 18 (now at least substantially incorporated into the independent claims), the Examiner has relied on the following excerpts from the Fadell reference to make a prior art showing of applicant's claimed technique "wherein at least one of the receiving the resource information, the determining at least one of the first measure and the second measure, the selecting the one of the first resource and the second

resource, and the identifying the selected one of the first resource and the second resource is performed in response to a change in at least one of a user, a geospatial location, or light."

> "In some embodiments, an electronic device can provide an interface for managing the power consumption of the associated electronic device. FIG. 2 is a schematic view of an illustrative display for managing power consumption in accordance with one embodiment of the invention. Display 200 can include bar 210 providing a graphical representation of the cost of power as the electronic device operates. Bar 210 can include movable slider 212 that can be placed between ends 214 and 216 of bar 210. Each of ends 214 and 216 can represent a limit of power consumption management for the associated electronic device. For example, end 214 can be associated with minimizing the power cost of operating the electronic device (e.g., by scheduling electronic device processes based on the cost of power), and end 216 can be associated with disregarding power cost considerations to ensure rapid or immediate execution of electronic device processes. The user can drag slider 212 to select a particular balance of processing efficiency and power cost of interest. Display 200 can include any other suitable information to assist a user in making such a determination, including for example cost indication 217 (e.g., providing an estimate of the power cost of each configuration of the electronic device) and processing delay indication 218 (e.g., providing an indication of the delay between providing an instruction to perform an operation and the actual execution of the operation). In some embodiments, the user can manage the power costs of electronic device operations using an interface other than bar 210 and slider 212, including for example by providing a power cost cap, processing immediacy maximum delay, percentage or value indicating the relative importance of power cost and processing immediacy, or any other suitable interface. The cost limit set by slider 212 or using another approach can be applied to any suitable duration, including for example a per day, week or month limit." Fadell, Paragraph [0050] – emphasis added

However, merely disclosing "an interface for managing the power consumption of the associated electronic device" and that a "[d]isplay 200 can include any other suitable information to assist a user in making such a determination" (emphasis added), as in Fadell, simply fails to

teach or suggest applicant's claimed technique "wherein at least one of the receiving the resource information, the determining at least one of the first measure and the second measure, the selecting the one of the first resource and the second resource, and the identifying the selected one of the first resource and the second resource is performed in response to a change in at least one of a user, a geospatial location, or light" (emphasis added), as claimed by applicant in the context of the entire claim.

To establish a prima facie case of obviousness, three basic criteria must be met. First, there must be some suggestion or motivation, either in the references themselves or in the knowledge generally available to one of ordinary skill in the art, to modify the reference or to combine reference teachings. Second, there must be a reasonable expectation of success. Finally, the prior art reference (or references when combined) must teach or suggest all the claim limitations. The teaching or suggestion to make the claimed combination and the reasonable expectation of success must both be found in the prior art and not based on applicant's disclosure. *In re Vaeck*, 947 F.2d 488, 20 USPQ2d 1438 (Fed.Cir.1991).

Applicant respectfully asserts that at least the third element of the prima facie case of obviousness has not been met, since the prior art excerpts, as relied upon by the Examiner, fail to teach or suggest all of the claim limitations, as noted above.

Claims depending from independent Claim 20 are also believed to be allowable based on their dependence. If an independent claim is nonobvious under 35 U.S.C. section 103, then any claim depending therefrom is nonobvious. *In re Fine*, 837 F.2d 1071, (Fed. Cir. 1988). Moreover, Applicant does not concede or assent to the Examiner's arguments as applied to any claim depending from Claim 20. Rather, the rejection of Claim 20 and any claim depending from Claim 20 is deemed improper at least by virtue of the reasons set forth herein and/or claim dependency, and Applicant reserves the right to further address the grounds of rejection in this or future actions and/or applications.

It is believed that all of the pending issues have been addressed. However, the absence of a reply to a specific rejection, issue, or comment does not signify agreement with or concession

of that rejection, issue, or comment. In addition, because the arguments made above may not be exhaustive, there may be reasons for patentability of any or all pending claims (or other claims) that have not been expressed. Still yet, nothing in this reply should be construed as intention to concede any issue with regard to any claim, except as specifically stated in this reply. Finally, it should be noted that no claims are intended to be construed under 35 U.S.C. 112, paragraph 6

The Commissioner is authorized to charge any other fee(s) that may be due to Deposit Account No. 50-5939 (Order No. PMOR0162B).

Respectfully submitted,

Dated: 28 Feb 2017

The Caldwell Firm, LLC
PO Box 59655
Dallas, Texas 75229-0655
Telephone: (214) 734-2313
pcaldwell@thecaldwellfirm.com

Patrick E. Caldwell, Esq.
Reg. No. 44,580

Electronic Acknowledgement Receipt

EFS ID:	28494576
Application Number:	14667642
International Application Number:	
Confirmation Number:	1029
Title of Invention:	METHODS, SYSTEMS, AND COMPUTER PROGRAM PRODUCTS FOR SELECTING A RESOURCE BASED ON A MEASURE OF A PROCESSING COST
First Named Inventor/Applicant Name:	Robert Paul Morris
Customer Number:	92045
Filer:	Patrick Edgar Caldwell
Filer Authorized By:	
Attorney Docket Number:	PMOR0162B
Receipt Date:	28-FEB-2017
Filing Date:	24-MAR-2015
Time Stamp:	19:39:24
Application Type:	Utility under 35 USC 111(a)

Payment information:

Submitted with Payment	no

File Listing:

Document Number	Document Description	File Name	File Size(Bytes)/ Message Digest	Multi Part /.zip	Pages (if appl.)
1	Amendment/Req. Reconsideration-After Non-Final Reject	PMOR0162B_AmndtA_vF_28-Feb-2017.pdf	60959 45a326083b3c423a872ff0f4e75b9e1950972820	no	10

Warnings:

Information:	
Total Files Size (in bytes):	60959

This Acknowledgement Receipt evidences receipt on the noted date by the USPTO of the indicated documents, characterized by the applicant, and including page counts, where applicable. It serves as evidence of receipt similar to a Post Card, as described in MPEP 503.

New Applications Under 35 U.S.C. 111
If a new application is being filed and the application includes the necessary components for a filing date (see 37 CFR 1.53(b)-(d) and MPEP 506), a Filing Receipt (37 CFR 1.54) will be issued in due course and the date shown on this Acknowledgement Receipt will establish the filing date of the application.

National Stage of an International Application under 35 U.S.C. 371
If a timely submission to enter the national stage of an international application is compliant with the conditions of 35 U.S.C. 371 and other applicable requirements a Form PCT/DO/EO/903 indicating acceptance of the application as a national stage submission under 35 U.S.C. 371 will be issued in addition to the Filing Receipt, in due course.

New International Application Filed with the USPTO as a Receiving Office
If a new international application is being filed and the international application includes the necessary components for an international filing date (see PCT Article 11 and MPEP 1810), a Notification of the International Application Number and of the International Filing Date (Form PCT/RO/105) will be issued in due course, subject to prescriptions concerning national security, and the date shown on this Acknowledgement Receipt will establish the international filing date of the application.

PTO/SB/06 (09-11)
Approved for use through 1/31/2014. OMB 0651-0032
U.S. Patent and Trademark Office; U.S. DEPARTMENT OF COMMERCE
Under the Paperwork Reduction Act of 1995, no persons are required to respond to a collection of information unless it displays a valid OMB control number.

PATENT APPLICATION FEE DETERMINATION RECORD Substitute for Form PTO-875	Application or Docket Number 14/667,642	Filing Date 03/24/2015	☐ To be Mailed

ENTITY: ☐ LARGE ☒ SMALL ☐ MICRO

APPLICATION AS FILED – PART I

FOR	(Column 1) NUMBER FILED	(Column 2) NUMBER EXTRA	RATE ($)	FEE ($)
☐ BASIC FEE (37 CFR 1.16(a), (b), or (c))	N/A	N/A	N/A	
☐ SEARCH FEE (37 CFR 1.16(k), (i), or (m))	N/A	N/A	N/A	
☐ EXAMINATION FEE (37 CFR 1.16(o), (p), or (q))	N/A	N/A	N/A	
TOTAL CLAIMS (37 CFR 1.16(i))	minus 20 =	*	X $ =	
INDEPENDENT CLAIMS (37 CFR 1.16(h))	minus 3 =	*	X $ =	
☐ APPLICATION SIZE FEE (37 CFR 1.16(s))	If the specification and drawings exceed 100 sheets of paper, the application size fee due is $310 ($155 for small entity) for each additional 50 sheets or fraction thereof. See 35 U.S.C. 41(a)(1)(G) and 37 CFR 1.16(s).			
☐ MULTIPLE DEPENDENT CLAIM PRESENT (37 CFR 1.16(j))				
* If the difference in column 1 is less than zero, enter "0" in column 2.			TOTAL	

APPLICATION AS AMENDED – PART II

AMENDMENT	02/28/2017	(Column 1) CLAIMS REMAINING AFTER AMENDMENT		(Column 2) HIGHEST NUMBER PREVIOUSLY PAID FOR	(Column 3) PRESENT EXTRA	RATE ($)	ADDITIONAL FEE ($)
	Total (37 CFR 1.16(i))	* 17	Minus	** 20	= 0	X $40 =	0
	Independent (37 CFR 1.16(h))	* 1	Minus	***3	= 0	X $210 =	0
	☐ Application Size Fee (37 CFR 1.16(s))						
	☐ FIRST PRESENTATION OF MULTIPLE DEPENDENT CLAIM (37 CFR 1.16(j))						
						TOTAL ADD'L FEE	**0**

AMENDMENT		(Column 1) CLAIMS REMAINING AFTER AMENDMENT		(Column 2) HIGHEST NUMBER PREVIOUSLY PAID FOR	(Column 3) PRESENT EXTRA	RATE ($)	ADDITIONAL FEE ($)
	Total (37 CFR 1.16(i))	*	Minus	**	=	X $ =	
	Independent (37 CFR 1.16(h))	*	Minus	***	=	X $ =	
	☐ Application Size Fee (37 CFR 1.16(s))						
	☐ FIRST PRESENTATION OF MULTIPLE DEPENDENT CLAIM (37 CFR 1.16(j))						
						TOTAL ADD'L FEE	

* If the entry in column 1 is less than the entry in column 2, write "0" in column 3.
** If the "Highest Number Previously Paid For" IN THIS SPACE is less than 20, enter "20".
*** If the "Highest Number Previously Paid For" IN THIS SPACE is less than 3, enter "3".
The "Highest Number Previously Paid For" (Total or Independent) is the highest number found in the appropriate box in column 1.

LIE
SHERRY DAVIS

This collection of information is required by 37 CFR 1.16. The information is required to obtain or retain a benefit by the public which is to file (and by the USPTO to process) an application. Confidentiality is governed by 35 U.S.C. 122 and 37 CFR 1.14. This collection is estimated to take 12 minutes to complete, including gathering, preparing, and submitting the completed application form to the USPTO. Time will vary depending upon the individual case. Any comments on the amount of time you require to complete this form and/or suggestions for reducing this burden, should be sent to the Chief Information Officer, U.S. Patent and Trademark Office, U.S. Department of Commerce, P.O. Box 1450, Alexandria, VA 22313-1450. DO NOT SEND FEES OR COMPLETED FORMS TO THIS ADDRESS. **SEND TO: Commissioner for Patents, P.O. Box 1450, Alexandria, VA 22313-1450.**
If you need assistance in completing the form, call 1-800-PTO-9199 and select option 2.

UNITED STATES PATENT AND TRADEMARK OFFICE
COMMISSIONER FOR PATENTS
P.O.BOX 1450
ALEXANDRIA VA 22313-1451

PRESORTED
FIRST-CLASS MAIL
U.S. POSTAGE PAID
POSTEDIGITAL
NNNNN

The Caldwell Firm, LLC
PO Box 59655
Dept. SVIPGP
Dallas, TX 75229

Courtesy Reminder for
Application Serial No: 14/667,642

Attorney Docket No: PMOR0162B
Customer Number: 92045
Date of Electronic Notification: 11/30/2016

This is a courtesy reminder that new correspondence is available for this application. If you have not done so already, please review the correspondence. The official date of notification of the outgoing correspondence will be indicated on the form PTOL-90 accompanying the correspondence.

An email notification regarding the correspondence was sent to the following email address(es) associated with your customer number:
pcaldwell@thecaldwellfirm.com
eofficeaction@appcoll.com

To view your correspondence online or update your email addresses, please visit us anytime at **https://sportal.uspto.gov/secure/myportal/privatepair.** If you have any questions, please email the Electronic Business Center (EBC) at EBC@uspto.gov or call 1-866-217-9197.

UNITED STATES PATENT AND TRADEMARK OFFICE

UNITED STATES DEPARTMENT OF COMMERCE
United States Patent and Trademark Office
Address: COMMISSIONER FOR PATENTS
P.O. Box 1450
Alexandria, Virginia 22313-1450
www.uspto.gov

APPLICATION NO.	FILING DATE	FIRST NAMED INVENTOR	ATTORNEY DOCKET NO.	CONFIRMATION NO.
14/667,642	03/24/2015	Robert Paul Morris	PMOR0162B	1029

92045 7590 11/30/2016
The Caldwell Firm, LLC
PO Box 59655
Dept. SVIPGP
Dallas, TX 75229

EXAMINER
STOYNOV, STEFAN

ART UNIT	PAPER NUMBER
2116	

NOTIFICATION DATE	DELIVERY MODE
11/30/2016	ELECTRONIC

Please find below and/or attached an Office communication concerning this application or proceeding.

The time period for reply, if any, is set in the attached communication.

Notice of the Office communication was sent electronically on above-indicated "Notification Date" to the following e-mail address(es):

pcaldwell@thecaldwellfirm.com
eofficeaction@appcoll.com

PTOL-90A (Rev. 04/07)

Office Action Summary	Application No. 14/667,642	Applicant(s) MORRIS, ROBERT PAUL	
	Examiner STEFAN STOYNOV	Art Unit 2116	AIA (First Inventor to File) Status No

-- The MAILING DATE of this communication appears on the cover sheet with the correspondence address --

Period for Reply

A SHORTENED STATUTORY PERIOD FOR REPLY IS SET TO EXPIRE 3 MONTHS FROM THE MAILING DATE OF THIS COMMUNICATION.

- Extensions of time may be available under the provisions of 37 CFR 1.136(a). In no event, however, may a reply be timely filed after SIX (6) MONTHS from the mailing date of this communication.
- If NO period for reply is specified above, the maximum statutory period will apply and will expire SIX (6) MONTHS from the mailing date of this communication.
- Failure to reply within the set or extended period for reply will, by statute, cause the application to become ABANDONED (35 U.S.C. § 133). Any reply received by the Office later than three months after the mailing date of this communication, even if timely filed, may reduce any earned patent term adjustment. See 37 CFR 1.704(b).

Status

1)☒ Responsive to communication(s) filed on *03/24/2015*.

☐ A declaration(s)/affidavit(s) under **37 CFR 1.130(b)** was/were filed on _____.

2a)☐ This action is **FINAL**. 2b)☒ This action is non-final.

3)☐ An election was made by the applicant in response to a restriction requirement set forth during the interview on _____; the restriction requirement and election have been incorporated into this action.

4)☐ Since this application is in condition for allowance except for formal matters, prosecution as to the merits is closed in accordance with the practice under *Ex parte Quayle*, 1935 C.D. 11, 453 O.G. 213.

Disposition of Claims*

5)☒ Claim(s) *1-20* is/are pending in the application.

5a) Of the above claim(s) _____ is/are withdrawn from consideration.

6)☐ Claim(s) _____ is/are allowed.

7)☒ Claim(s) *1-20* is/are rejected.

8)☐ Claim(s) _____ is/are objected to.

9)☐ Claim(s) _____ are subject to restriction and/or election requirement.

* If any claims have been determined allowable, you may be eligible to benefit from the **Patent Prosecution Highway** program at a participating intellectual property office for the corresponding application. For more information, please see http://www.uspto.gov/patents/init_events/pph/index.jsp or send an inquiry to PPHfeedback@uspto.gov.

Application Papers

10)☒ The specification is objected to by the Examiner.

11)☒ The drawing(s) filed on *03/24/2015* is/are: a)☒ accepted or b)☐ objected to by the Examiner.

Applicant may not request that any objection to the drawing(s) be held in abeyance. See 37 CFR 1.85(a).

Replacement drawing sheet(s) including the correction is required if the drawing(s) is objected to. See 37 CFR 1.121(d).

Priority under 35 U.S.C. § 119

12)☐ Acknowledgment is made of a claim for foreign priority under 35 U.S.C. § 119(a)-(d) or (f).

Certified copies:

a)☐ All b)☐ Some** c)☐ None of the:

1.☐ Certified copies of the priority documents have been received.

2.☐ Certified copies of the priority documents have been received in Application No. _____.

3.☐ Copies of the certified copies of the priority documents have been received in this National Stage application from the International Bureau (PCT Rule 17.2(a)).

** See the attached detailed Office action for a list of the certified copies not received.

Attachment(s)

1) ☒ Notice of References Cited (PTO-892)

2) ☐ Information Disclosure Statement(s) (PTO/SB/08a and/or PTO/SB/08b) Paper No(s)/Mail Date _____.

3) ☐ Interview Summary (PTO-413) Paper No(s)/Mail Date. _____ .

4) ☐ Other: _____.

The present application is being examined under the pre-AIA first to invent provisions.

Specification

The disclosure is objected to because of the following informalities: It is suggested amending paragraphs 0001-0004 and 0128 in the specification to identify the status and respective patent(s) issued from recited parent application(s) and related application(s).

Appropriate correction is required.

Claim Interpretation

Claim limitations "cost advisor component configured for receiving resource information identifying a first resource and a second resource for processing by a program component", "cost monitor component configured for determining at least one of a first measure of a specified processing cost for the processing of the first resource and a second measure of the processing cost for the processing of the second resource", "cost director component configured for selecting one of the first resource and the second resource based on the at least one of the first measure and the second measure", and "cost operations component configured for identifying, to the program component, the selected one of the first resource and the second resource for processing " has/have been interpreted under 35 U.S.C. 112(f) or pre-AIA 35 U.S.C. 112, sixth paragraph, because it uses/they use a generic placeholder "cost advisor component", "cost monitor component", "cost director component", and "cost operations component" coupled with respective functional language "receiving resource information

identifying a first resource and a second resource for processing by a program component", "determining at least one of a first measure of a specified processing cost for the processing of the first resource and a second measure of the processing cost for the processing of the second resource", "selecting one of the first resource and the second resource based on the at least one of the first measure and the second measure", and "identifying, to the program component, the selected one of the first resource and the second resource for processing" without reciting sufficient structure to achieve the function. Furthermore, the generic placeholder is not preceded by a structural modifier. One of ordinary skill in the art would not recognize the above-listed components as structure, but merely substitution for the term "means".

Since the claim limitation(s) invokes 35 U.S.C. 112(f) or pre-AIA 35 U.S.C. 112, sixth paragraph, claim(s) 19 has/have been interpreted to cover the corresponding structure described in the specification that achieves the claimed function, and equivalents thereof.

A review of the specification shows that the following appears to be the corresponding structure described in the specification for the 35 U.S.C. 112(f) or pre-AIA 35 U.S.C. 112, sixth paragraph limitation: Instruction-Processing Unit (IPU) (FIG. 1. 104) executing corresponding software component (paragraphs 0028, 0041, 0044, 0060, 0079, 0093, and 0104).

If applicant wishes to provide further explanation or dispute the examiner's interpretation of the corresponding structure, applicant must identify the corresponding

structure with reference to the specification by page and line number, and to the drawing, if any, by reference characters in response to this Office action.

If applicant does not intend to have the claim limitation(s) treated under 35 U.S.C. 112(f) or pre-AIA 35 U.S.C. 112 , sixth paragraph, applicant may amend the claim(s) so that it/they will clearly not invoke 35 U.S.C. 112(f) or pre-AIA 35 U.S.C. 112, sixth paragraph, or present a sufficient showing that the claim recites/recite sufficient structure, material, or acts for performing the claimed function to preclude application of 35 U.S.C. 112(f) or pre-AIA 35 U.S.C. 112, sixth paragraph.

For more information, see MPEP § 2173 *et seq.* and *Supplementary Examination Guidelines for Determining Compliance With 35 U.S.C. 112 and for Treatment of Related Issues in Patent Applications*, 76 FR 7162, 7167 (Feb. 9, 2011).

Double Patenting

The nonstatutory double patenting rejection is based on a judicially created doctrine grounded in public policy (a policy reflected in the statute) so as to prevent the unjustified or improper timewise extension of the “right to exclude” granted by a patent and to prevent possible harassment by multiple assignees. A nonstatutory double patenting rejection is appropriate where the conflicting claims are not identical, but at least one examined application claim is not patentably distinct from the reference claim(s) because the examined application claim is either anticipated by, or would have been obvious over, the reference claim(s). See, e.g., *In re Berg*, 140 F.3d 1428, 46 USPQ2d 1226 (Fed. Cir. 1998); *In re Goodman*, 11 F.3d 1046, 29 USPQ2d 2010 (Fed. Cir. 1993); *In re Longi*, 759 F.2d 887, 225 USPQ 645 (Fed. Cir. 1985); *In re Van Ornum*,

686 F.2d 937, 214 USPQ 761 (CCPA 1982); *In re Vogel*, 422 F.2d 438, 164 USPQ 619 (CCPA 1970); *In re Thorington*, 418 F.2d 528, 163 USPQ 644 (CCPA 1969).

A timely filed terminal disclaimer in compliance with 37 CFR 1.321(c) or 1.321(d) may be used to overcome an actual or provisional rejection based on nonstatutory double patenting provided the reference application or patent either is shown to be commonly owned with the examined application, or claims an invention made as a result of activities undertaken within the scope of a joint research agreement. See MPEP § 717.02 for applications subject to examination under the first inventor to file provisions of the AIA as explained in MPEP § 2159. See MPEP §§ 706.02(l)(1) - 706.02(l)(3) for applications not subject to examination under the first inventor to file provisions of the AIA. A terminal disclaimer must be signed in compliance with 37 CFR 1.321(b).

The USPTO Internet website contains terminal disclaimer forms which may be used. Please visit www.uspto.gov/patent/patents-forms. The filing date of the application in which the form is filed determines what form (e.g., PTO/SB/25, PTO/SB/26, PTO/AIA/25, or PTO/AIA/26) should be used. ***A web-based eTerminal Disclaimer may be filled out completely online using web-screens. An eTerminal Disclaimer that meets all requirements is auto-processed and approved immediately upon submission. For more information about eTerminal Disclaimers, refer to www.uspto.gov/patents/process/file/efs/guidance/eTD-info-I.jsp.***

Claims 1-20 are rejected on the ground of nonstatutory double patenting as being unpatentable over claims 1 and 3-18 of U.S. Patent No. 8,745,418. Although the claims

at issue are not identical, they are not patentably distinct from each other because all claim limitations of claims 1, 4, and 6-20 are disclosed in respective claims 1 and 3-18 of U.S. Patent No. 8,745,418.

"Generally, an obviousness-type double patenting analysis entails two steps. First, as a matter of law, a court construes the claim in the earlier patent and the claim in the later patent and determines the differences. Georgia-Pacific Corp. v. United States Gypsum Co., 195 F.3d 1322, 1326, 52, USPQ2d 1590, 1593 (Fed. Cir. 1999). Second, the court determines whether the differences in the subject matter between the two claims render the claims patentably distinct. Id. at 1327, 52 USPQ2d at 1595. A later claim that is not patentably distinct from an earlier claim in a commonly owned patent is invalid for obvious-type double patenting. In re Berg, 140 F.3d 1428, 1431,46 USPQ2d 1226, 1229 (Fed. Cir. 1998). A later patent claim is not patentably distinct from an earlier parent claim if the later claim is obvious over, **or anticipated by**, the patent claim. In re Longi, 759 F.2d at 896, 255 USPQ at 651 (affirming a holding of obviousness-type double patenting where a patent application claim to a genus is anticipated by a patent claim to a species within that genus)." Eli Lilly and Company v Barr Laboratories, Inc., United States Court of Appeals for the Federal Circuit, On petition for Rehearing en banc (decided: May 30, 2001).

Claims 2, 3, and 5, being dependent on claim 1, are rejected based on the same ground of rejection.

Claim Rejections - 35 USC § 101

35 U.S.C. 101 reads as follows:

> Whoever invents or discovers any new and useful process, machine, manufacture, or composition of matter, or any new and useful improvement thereof, may obtain a patent therefor, subject to the conditions and requirements of this title.

Claims 1-20 are rejected under 35 U.S.C. 101 because the claimed invention is directed to a judicial exception (i.e., a law of nature, a natural phenomenon, or an abstract idea) without significantly more. Claim(s) 1, 19, and 20 is/are directed to receiving, monitoring, and analyzing/comparing data, followed by identifying the compared data, which has been identified by the courts as an abstract idea (please see Electric Power Group, LLC v. Alstom S.A. (Fed. Cir. 2016)).

Claim 1 recites "receiving resource information (data) identifying a first resource (data) and a second resource (data) for processing by a program component; determining at least one of a first measure of a specified processing cost (analyzing data) for the processing of the first resource and a second measure of the processing cost (analyzing data) for the processing of the second resource; selecting one of the first resource (data) and the second resource (data) based on the at least one of the first measure and the second measure (comparing data); and identifying, to the program component, the selected one of the first resource and the second resource for processing (identifying the compared data)" – i.e. receiving, monitoring, and analyzing/comparing data, followed by identifying the compared data, thus, an abstract idea 'Of Itself'.

The same rationale applies for independent claim 19, wherein the recited cost advisor component, cost monitor component, cost director component, and cost operations component are merely labels/identifiers of respective generic software components performing the steps of claim 1 – i.e. these additional elements are not sufficient to amount to significantly more than the judicial exception because software components are routine in any computer implementation.

Furthermore, claim 20 does not include additional elements that are sufficient to amount to significantly more than the judicial exception because claim 20 is directed to computer program (software), executed from computer-readable medium by machine, which functionality and hardware is routine for any computer environment.

Dependent claims 2-18 recite no additional limitation(s) that would amount to significantly more than the abstract idea defined in independent claim 1.

Therefore, the claimed invention as a whole does not amount to significantly more than the abstract idea.

Accordingly, for the reasons provided above, claims 1-20 are directed to an abstract idea, hence, not patent eligible under 35 USC 101.

In addition, claim 20 is rejected under 35 U.S.C. 101 because the claimed invention is directed to non-statutory subject matter.

The claim(s) does/do not fall within at least one of the four categories of patent eligible subject matter because the applicant has provided evidence that the applicant intends the term "***computer readable medium***" to include non-statutory matter. The applicant describes a computer-readable storage medium as including open ended language and thus it is reasonable to interpret it to include all possible mediums, including non-statutory mediums (see paragraph 0132). The words "storing" and/or "recording" are insufficient to convey only statutory embodiments to one of ordinary skill in the art absent an explicit and deliberate limiting definition or clear differentiation between storage media and transitory media in the disclosure. As such, the claim(s) is/are drawn to a form of energy. Energy is not one of the four categories of invention and therefore this/these claim(s) is/are not statutory. Energy is not a series of steps or acts and thus is not a process. Energy is not a physical article or object and as such is not a machine or manufacture. Energy is not a combination of substances and therefore not a composition of matter.

The examiner suggests amending the claim to read as a “non-transitory computer-readable medium”.

Claim Rejections - 35 USC § 102

The following is a quotation of the appropriate paragraphs of pre-AIA 35 U.S.C. 102 that form the basis for the rejections under this section made in this Office action:

> A person shall be entitled to a patent unless –
>
> (b) the invention was patented or described in a printed publication in this or a foreign country or in public use or on sale in this country, more than one year prior to the date of application for patent in the United States.

Claims 1, 2, 4-6, 8, 9, 11, 13-16, 19, and 20 are rejected under pre-AIA 35 U.S.C. 102(b) as being anticipated by Zwernemann et al., US Patent Appl. Pub. No. 2007/0211743.

Regarding claims 1 and 20, Zwernemann discloses a method and a computer-readable medium embodying a computer program, executable by a machine, for selecting a resource based on a measure of a processing cost (FIG(s) 1-4), the method comprising, and the computer program comprising executable instructions for:

receiving resource information identifying a first resource and a second resource for processing by a program component (paragraph 0039);

determining at least one of a first measure of a specified processing cost for the processing of the first resource and a second measure of the processing cost for the processing of the second resource (paragraphs 0040-0041);

selecting one of the first resource and the second resource based on the at least one of the first measure and the second measure (paragraphs 0042-0046); and

identifying, to the program component, the selected one of the first resource and the second resource for processing (paragraphs 0045-0049).

Regarding claim 19, Zwernemann discloses a system for selecting a resource based on a measure of a processing cost, the system comprising:

a cost advisor component, a cost monitor component, a cost director component, and a cost operations component adapted for operation in an execution environment (paragraphs 0018-0019, 0039-0049, FIG(s) 2 and 4);

the cost advisor component configured for receiving resource information identifying a first resource and a second resource for processing by a program component (paragraph 0039);

the cost monitor component configured for determining at least one of a first measure of a specified processing cost for the processing of the first resource and a second measure of the processing cost for the processing of the second resource (paragraphs 0040-0041);

the cost director component configured for selecting one of the first resource and the second resource based on the at least one of the first measure and the second measure (paragraphs 0042-0046); and

the cost operations component configured for identifying, to the program component, the selected one of the first resource and the second resource for processing (paragraphs 0045-0049).

Regarding claim 2, Zwernemann further discloses the method wherein at least a portion of the resource information is received in response to processing the first resource by the program component (paragraph 0039).

Regarding claim 4, Zwernemann further discloses the method wherein the at least one of the first measure and the second measure includes at least one of a measure of electrical power, a measure of electrical energy, a measure of stored energy, a measure of mechanical resistance, a measure or electrical resistance, a measure of time, a count of a particular event, a measure of monetary cost, a measure of heat, a measure of light, a measure of distance, a measure of mass, a measure of size, and a measure of weight (paragraphs 0016, 0017, and 0047).

Regarding claim 5, Zwernemann further discloses the method, as per claim 4, wherein the count is based on at least one of processor cycles, disk spins, data read operations, data write operations, refreshes of at least a portion of a presentation space, display refreshes, data transmitted via a network, data received via a network, and a measure of human movement (paragraphs 0016, 0017, and 0047).

Regarding claim 6, Zwernemann further discloses the method wherein a metric for measuring the processing cost is determined based on at least one of the first resource, the second resource, and operation, a hardware component , the program component, a user, a group, a role, a task, a time, a location, a device performing the operation, and a device for providing the resource (paragraphs 0020-0049, FIG(s) 3 and 4).

Regarding claim 8, Zwernemann further discloses the method wherein determining at least one of the first measure and the second measure is based on a previous determination of a measure of a processing cost (paragraph 0018).

Regarding claim 9, Zwernemann further discloses the method wherein determining at least one of the first measure and the second measure ids based on locating a predefined measure based on at least one of the first resource, the second resource, and the program component (paragraphs 0020-0049, FIG(s) 3 and 4).

Regarding claim 11, Zwernemann further discloses the method wherein the selecting comprises:

comparing the first measure and the second measure; and

selecting one of the first resource and the second resource based on the comparing (paragraphs 0018-0049, FIG(s) 2-4).

Regarding claim 13, Zwernemann further discloses the method wherein the selected one of the first resource and the second resource is identified to the program component for processing instead the not selected one of the first resource and the second resource currently being used (paragraphs 0044-0049).

Regarding claim 14, Zwernemann further discloses the method wherein the selected one of the first resource and the second resource is identified to the program component for processing in addition to the not selected one of the first resource and the second resource currently being processed by the program component (paragraphs 0044-0049).

Regarding claim 15, Zwernemann further discloses the method wherein identifying the selected one of the first resource and the second resource to the program component comprises:

disabling access, for the program component, to the not selected one of the first resource and the second resource; and

enabling access, for the program component, to the selected one of the first and the second resources (paragraphs 0044-0049).

Regarding claim 16, Zwernemann further discloses the method wherein identifying the selected one of the first resource and the second resource to the program component comprises:

providing for terminating at least one of the program component and a processing of an unselected one of the first resource and the second resource by the program component; and

subsequently at least one of restarting the program component configured to process the selected one of the first resource and the second resource and starting processing to process the selected one of the first resource and the second resource (paragraphs 0044-0049).

Claim Rejections - 35 USC § 103

The following is a quotation of pre-AIA 35 U.S.C. 103(a) which forms the basis for all obviousness rejections set forth in this Office action:

> (a) A patent may not be obtained though the invention is not identically disclosed or described as set forth in section 102 of this title, if the differences between the subject matter sought to be patented and the prior art are such that the subject matter as a whole would have been obvious at the time the invention was made to a person having ordinary skill in the art to which

said subject matter pertains. Patentability shall not be negatived by the manner in which the invention was made.

Claims 3, 7, 10, 12, 17, and 18 are rejected under pre-AIA 35 U.S.C. 103(a) as being unpatentable over Zwernemann et al., US Patent Appl. Pub. No. 2007/0211743 in view of Fadell, US Patent Appl. Pub. No. 2010/0010857.

Regarding claims 3, 7, 10, 12, 17, and 18, Zwernemann discloses the method, as per claim 1.

With regards to claim 3, Zwernemann does not specifically state the processing cost is measured based on energy received from at least one of a battery and an energy source for charging a battery.

With regards to claim 7, Zwernemann does not specifically state the at least one of the first measure and the second measure is determined in response to a user input for measuring the processing cost.

With regards to claim 10, Zwernemann does not specifically state determining at least one of the first measure and the second measure comprises: sending a message via a network to a node for determining at least one of the first measure and the second measure; and receiving a response via the network identifying at least one of the first measure and the second measure.

With regards to claim 12, Zwernemann does not specifically state the selecting comprises: communicating with an output device to present a first selectable representation of the first resource and a second selectable representation of the second resource to a user; receiving selection information identifying one of the first

resource and the second resource, in response to a detected user input; and selecting the identified resource.

With regards to claim 17, Zwernemann does not specifically state at least one of receiving the resource information, determining at last one of the first measure and the second measure, selecting the one of first resource and the second resource, and identifying the selected one of the first resource and the second resource is performed in response to at least one of detecting a change in a first energy source, receiving energy from a first energy source then receiving energy from a second energy source, detecting that energy is flowing to a first source increasing the amount of energy stored in the first source, and detecting a change in an amount of energy available from a first energy source.

With regards to claim 18, Zwernemann does not specifically state at least one of receiving the resource information, determining at last one of the first measure and the second measure, selecting the one of first resource and the second resource, and identifying the selected one of the first resource and the second resource is performed in response to a change in at least one of monetary cost of energy, and organization providing energy, a rate of energy utilization, a utilization time of a first energy source, a user, a geospatial location, heat, light, and a component for at least one of storing, transmitting, and receiving energy.

Fadell teaches systems and methods for controlling the performance of electronic device operations based on the power cost associated with the operations (paragraph 0001). Fadell further teaches each process or operation requiring different

amounts of resources, wherein based on determination of the power cost, certain processes (i.e. with corresponding resources) are scheduled or postponed (upon selection) for later execution (paragraphs 0005-0012, 0040-0068, FIG (s) 1-9). In addition, Fadell teaches a user interface (FIG(s) 2-6) for setting and displaying the criteria (i.e. measure) of power allocation for respective resources (paragraphs 0050-0063). Fadell also teaches management based on power cost associated with charging a battery (paragraphs 0010, 0036, and 0037), different types of power supplies , time utilization schedules, and heat emergencies (paragraphs 0040-0043). Fadell further teaches determining power cost within a network environment (paragraphs 0010, 0011, 0047, and 0048). Thus, proper scheduling for the resource's power utilization based on the power cost is achieved (paragraphs 0002, 0012, and 0068-0071).

It would have been obvious to one of ordinary skill in the art at the time of applicant's invention to use the above described system and method, as suggested by Fadell with the method disclosed by Zwernemann in order to implement the processing cost is measured based on energy received from at least one of a battery and an energy source for charging a battery, the at least one of the first measure and the second measure is determined in response to a user input for measuring the processing cost, determining at least one of the first measure and the second measure comprises: sending a message via a network to a node for determining at least one of the first measure and the second measure; and receiving a response via the network identifying at least one of the first measure and the second measure, the selecting comprises: communicating with an output device to present a first selectable representation of the

first resource and a second selectable representation of the second resource to a user; receiving selection information identifying one of the first resource and the second resource, in response to a detected user input; and selecting the identified resource, and at least one of receiving the resource information, determining at last one of the first measure and the second measure, selecting the one of first resource and the second resource, and identifying the selected one of the first resource and the second resource is performed in response to a change in at least one of monetary cost of energy, and organization providing energy, a rate of energy utilization, a utilization time of a first energy source, a user, a geospatial location, heat, light, and a component for at least one of storing, transmitting, and receiving energy. One of ordinary skill in the art would be motivated to do so in order to properly schedule the resource's power utilization based on the power cost.

Conclusion

The prior art made of record and not relied upon is considered pertinent to applicant's disclosure. Barsness et al., US Patent No. 7,941,427 and Yellin et al., US Patent No. 8,131,843, show similar inventions.

Any inquiry concerning this communication or earlier communications from the examiner should be directed to STEFAN STOYNOV whose telephone number is (571)272-4236. The examiner can normally be reached on 8:30AM-5:00PM.

If attempts to reach the examiner by telephone are unsuccessful, the examiner's supervisor, Kim Huynh can be reached on (571) 272-4147. The fax phone number for

the organization where this application or proceeding is assigned is 571-273-8300.

Information regarding the status of an application may be obtained from the Patent Application Information Retrieval (PAIR) system. Status information for published applications may be obtained from either Private PAIR or Public PAIR. Status information for unpublished applications is available through Private PAIR only. For more information about the PAIR system, see http://pair-direct.uspto.gov. Should you have questions on access to the Private PAIR system, contact the Electronic Business Center (EBC) at 866-217-9197 (toll-free). If you would like assistance from a USPTO Customer Service Representative or access to the automated information system, call 800-786-9199 (IN USA OR CANADA) or 571-272-1000.

/STEFAN STOYNOV/
Primary Examiner, Art Unit 2116

Notice of References Cited	Application/Control No. 14/667,642	Applicant(s)/Patent Under Reexamination MORRIS, ROBERT PAUL	
	Examiner STEFAN STOYNOV	Art Unit 2116	Page 1 of 1

U.S. PATENT DOCUMENTS

*		Document Number Country Code-Number-Kind Code	Date MM-YYYY	Name	Classification
*	A	US-2007/0211743	09-2007	Zwernemann et al.	370/431
*	B	US-2010/0010857	01-2010	Fadell, Anthony	705/8
*	C	US-7,941,427	05-2011	Barsness et al.	707/720
*	D	US-8,131,843	03-2012	Yellin et al.	709/224
	E	US-			
	F	US-			
	G	US-			
	H	US-			
	I	US-			
	J	US-			
	K	US-			
	L	US-			
	M	US-			

FOREIGN PATENT DOCUMENTS

*		Document Number Country Code-Number-Kind Code	Date MM-YYYY	Country	Name	Classification
	N					
	O					
	P					
	Q					
	R					
	S					
	T					

NON-PATENT DOCUMENTS

*		Include as applicable: Author, Title Date, Publisher, Edition or Volume, Pertinent Pages)
	U	
	V	
	W	
	X	

*A copy of this reference is not being furnished with this Office action. (See MPEP § 707.05(a).)
Dates in MM-YYYY format are publication dates. Classifications may be US or foreign.

Search Notes	Application/Control No.	Applicant(s)/Patent Under Reexamination
	14667642	MORRIS, ROBERT PAUL
	Examiner	**Art Unit**
	STEFAN STOYNOV	2116

CPC- SEARCHED

Symbol	Date	Examiner
G06F 9/50	11/23/16	SS
G06F 9/5027	11/23/16	SS

CPC COMBINATION SETS - SEARCHED

Symbol	Date	Examiner

US CLASSIFICATION SEARCHED

Class	Subclass	Date	Examiner

SEARCH NOTES

Search Notes	Date	Examiner
EAST search for USPAT, US-PGPUB, EPO, JPO, DERWENT, IBM_TDB (see attached file).	11/23/16	SS
G06F 9/50,5027 text search only for USPAT, US-PGPUB, EPO, JPO, DERWENT, IBM_TDB (see attached file).	11/23/16	SS
Inventor's search.	11/23/16	SS

INTERFERENCE SEARCH

US Class/ CPC Symbol	US Subclass / CPC Group	Date	Examiner

EAST Search History

EAST Search History (Prior Art)

Ref #	Hits	Search Query	DBs	Default Operator	Plurals	Time Stamp
L1	164	(MORRIS adj ROBERT adj PAUL).in.	US-PGPUB; USPAT; EPO; JPO; DERWENT; IBM_TDB	OR	OFF	2016/11/23 15:20
L2	232	(MORRIS adj ROBERT adj P).in.	US-PGPUB; USPAT; EPO; JPO; DERWENT; IBM_TDB	OR	OFF	2016/11/23 15:20
L3	8	L1 and (cost same resource$1).clm.	US-PGPUB; USPAT; EPO; JPO; DERWENT; IBM_TDB	OR	OFF	2016/11/23 15:20
L4	8	L1 and (cost with resource$1).clm.	US-PGPUB; USPAT; EPO; JPO; DERWENT; IBM_TDB	OR	OFF	2016/11/23 15:20
L5	1	L2 and (cost same resource$1).clm.	US-PGPUB; USPAT; EPO; JPO; DERWENT; IBM_TDB	OR	OFF	2016/11/23 15:20
L6	1	L2 and (cost with resource$1).clm.	US-PGPUB; USPAT; EPO; JPO; DERWENT; IBM_TDB	OR	OFF	2016/11/23 15:20
L7	5	L1 and ((processing adj cost) same resource$1).clm.	US-PGPUB; USPAT; EPO; JPO; DERWENT; IBM_TDB	OR	OFF	2016/11/23 15:20
L8	0	L2 and ((processing adj cost) same resource$1).clm.	US-PGPUB; USPAT; EPO; JPO; DERWENT; IBM_TDB	OR	OFF	2016/11/23 15:20
L9	5	L1 and ((processing adj cost) with resource$1).clm.	US-PGPUB; USPAT; EPO; JPO; DERWENT; IBM_TDB	OR	OFF	2016/11/23 15:20
L10	5	L1 and (cost adj advisor).clm.	US-PGPUB; USPAT; EPO; JPO; DERWENT; IBM_TDB	OR	OFF	2016/11/23 15:20

L11	2	"7242920".pn.	US-PGPUB; USPAT; EPO; JPO; DERWENT; IBM_TDB	OR	OFF	2016/11/23 15:20
L12	2	"20100157821"	US-PGPUB; USPAT; EPO; JPO; DERWENT; IBM_TDB	OR	OFF	2016/11/23 15:20
L13	2	"20080263375"	US-PGPUB; USPAT; EPO; JPO; DERWENT; IBM_TDB	OR	OFF	2016/11/23 15:20
L14	2	"20100010857"	US-PGPUB; USPAT; EPO; JPO; DERWENT; IBM_TDB	OR	OFF	2016/11/23 15:20
L15	1	12/463133	US-PGPUB; USPAT; EPO; JPO; DERWENT; IBM_TDB	OR	OFF	2016/11/23 15:20
L16	6291	(resource$1 near2 (processing or executing or execution)) same cost	US-PGPUB; USPAT; EPO; JPO; DERWENT; IBM_TDB	OR	OFF	2016/11/23 15:20
L17	3216	(resource$1 near2 (processing or executing or execution)) with cost	US-PGPUB; USPAT; EPO; JPO; DERWENT; IBM_TDB	OR	OFF	2016/11/23 15:20
L18	279	L16 same ((select$3 or choos$3) near5 resource$1)	US-PGPUB; USPAT; EPO; JPO; DERWENT; IBM_TDB	OR	OFF	2016/11/23 15:20
L19	145	L17 with ((select$3 or choos$3) near5 resource$1)	US-PGPUB; USPAT; EPO; JPO; DERWENT; IBM_TDB	OR	OFF	2016/11/23 15:20
L20	25	("20020042835" | "20030041110" | "20040226013" | "20050028188" | "20050149937" | "20050166205" | "20050240922" | "20060136396" | "5423040" | "5465354" | "5506999" | "5577240" | "5684971" | "5958003" | "6108648" | "6199068" | "6327581" | "6463580" | "6687257" | "6715145" | "6944862" | "6957433" | "7099815" | "7418705" | "7660705").PN.	US-PGPUB; USPAT; USOCR	OR	OFF	2016/11/23 15:20
L21	0	L20 and L16	US-PGPUB; USPAT; EPO; JPO; DERWENT; IBM_TDB	OR	OFF	2016/11/23 15:20

L22	2	11/369737	US-PGPUB; USPAT; EPO; JPO; DERWENT; IBM_TDB	OR	OFF	2016/11/23 15:20
L23	93	((processing or executing or execution) adj cost) same ((select$3 or choos$3 or allocat$4) near5 resource$1)	US-PGPUB; USPAT; EPO; JPO; DERWENT; IBM_TDB	OR	OFF	2016/11/23 15:20
L24	45	((processing or executing or execution) adj cost) with ((select$3 or choos$3 or allocat$4) near5 resource$1)	US-PGPUB; USPAT; EPO; JPO; DERWENT; IBM_TDB	OR	OFF	2016/11/23 15:20
L25	2	12/415818	US-PGPUB; USPAT; EPO; JPO; DERWENT; IBM_TDB	OR	OFF	2016/11/23 15:20
L26	27	L23 same measur$6	US-PGPUB; USPAT; EPO; JPO; DERWENT; IBM_TDB	OR	OFF	2016/11/23 15:20
L27	14	L24 with measur$6	US-PGPUB; USPAT; EPO; JPO; DERWENT; IBM_TDB	OR	OFF	2016/11/23 15:20
L28	27	(((processing or executing or execution) adj cost) same measur$6) same ((select$3 or choos$3 or allocat$4) near3 resource$1)	US-PGPUB; USPAT; EPO; JPO; DERWENT; IBM_TDB	OR	OFF	2016/11/23 15:20
L29	14	(((processing or executing or execution) adj cost) with measur$6) with ((select$3 or choos$3 or allocat$4) near3 resource$1)	US-PGPUB; USPAT; EPO; JPO; DERWENT; IBM_TDB	OR	OFF	2016/11/23 15:20
L30	39	(((processing or executing or execution) adj cost) same measur$6).clm.	US-PGPUB; USPAT; EPO; JPO; DERWENT; IBM_TDB	OR	OFF	2016/11/23 15:20
L31	34	(((processing or executing or execution) adj cost) with measur$6).clm.	US-PGPUB; USPAT; EPO; JPO; DERWENT; IBM_TDB	OR	OFF	2016/11/23 15:20
L32	11	L30 and ((select$3 or choos$3 or allocat$4) near3 resource$1)	US-PGPUB; USPAT; EPO; JPO; DERWENT; IBM_TDB	OR	OFF	2016/11/23 15:20
L33	10	L31 and ((select$3 or choos$3 or allocat$4) near3 resource$1)	US-PGPUB; USPAT; EPO; JPO; DERWENT; IBM_TDB	OR	OFF	2016/11/23 15:20

L34	9	"713".clas. and (((processing or executing or execution) adj cost) same measur$6)	US-PGPUB; USPAT; EPO; JPO; DERWENT; IBM_TDB	OR	OFF	2016/11/23 15:20
L35	6	"713".clas. and (((processing or executing or execution) adj cost) with measur$6)	US-PGPUB; USPAT; EPO; JPO; DERWENT; IBM_TDB	OR	OFF	2016/11/23 15:20
L36	5	L34 and ((select$3 or choos$3 or allocat$4) near3 resource$1)	US-PGPUB; USPAT; EPO; JPO; DERWENT; IBM_TDB	OR	OFF	2016/11/23 15:20
L37	3	L35 and ((select$3 or choos$3 or allocat$4) near3 resource$1)	US-PGPUB; USPAT; EPO; JPO; DERWENT; IBM_TDB	OR	OFF	2016/11/23 15:20
L38	14	"700".clas. and (((processing or executing or execution) adj cost) same measur$6)	US-PGPUB; USPAT; EPO; JPO; DERWENT; IBM_TDB	OR	OFF	2016/11/23 15:20
L39	7	"700".clas. and (((processing or executing or execution) adj cost) with measur$6)	US-PGPUB; USPAT; EPO; JPO; DERWENT; IBM_TDB	OR	OFF	2016/11/23 15:20
L40	2	L38 and ((select$3 or choos$3 or allocat$4) near3 resource$1)	US-PGPUB; USPAT; EPO; JPO; DERWENT; IBM_TDB	OR	OFF	2016/11/23 15:20
L41	23	"702".clas. and (((processing or executing or execution) adj cost) same measur$6)	US-PGPUB; USPAT; EPO; JPO; DERWENT; IBM_TDB	OR	OFF	2016/11/23 15:20
L42	10	"702".clas. and (((processing or executing or execution) adj cost) with measur$6)	US-PGPUB; USPAT; EPO; JPO; DERWENT; IBM_TDB	OR	OFF	2016/11/23 15:20
L43	8	L41 and ((select$3 or choos$3 or allocat$4) near3 resource$1)	US-PGPUB; USPAT; EPO; JPO; DERWENT; IBM_TDB	OR	OFF	2016/11/23 15:20
L44	4	L42 and ((select$3 or choos$3 or allocat$4) near3 resource$1)	US-PGPUB; USPAT; EPO; JPO; DERWENT; IBM_TDB	OR	OFF	2016/11/23 15:20
L45	3	12/626794	US-PGPUB; USPAT; EPO; JPO; DERWENT; IBM_TDB	OR	OFF	2016/11/23 15:20

L46	125	(((processing or executing or execution) adj cost) same measur$6) and ((select$3 or choos$3 or allocat$4) near3 resource$1)	US-PGPUB; USPAT; EPO; JPO; DERWENT; IBM_TDB	OR	OFF	2016/11/23 15:20
L47	57	(((processing or executing or execution) adj cost) with measur$6) and ((select$3 or choos$3 or allocat$4) near3 resource$1)	US-PGPUB; USPAT; EPO; JPO; DERWENT; IBM_TDB	OR	OFF	2016/11/23 15:20
L48	7	(US-20100010857-$ or US-20070211743-$ or US-20100199281-$).did. or (US-7930700-$ or US-7639671-$ or US-7941427-$ or US-8131843-$).did.	US-PGPUB; USPAT	OR	OFF	2016/11/23 15:20
L49	0	L48 and ((plural$3 or multi$3 or different or individual or several or separate or (more adj2 one) or first or second or another or other) adj resource$1)	US-PGPUB; USPAT; EPO; JPO; DERWENT; IBM_TDB	OR	OFF	2016/11/23 15:20
L50	4	L48 and ((plural$3 or multi$3 or different or individual or several or separate or (more adj2 one) or first or second or another or other) near2 resource$1)	US-PGPUB; USPAT; EPO; JPO; DERWENT; IBM_TDB	OR	OFF	2016/11/23 15:20
L51	58	(((processing or executing or execution) adj cost) same (determin$5 or estimat$4 or calculat$4 or compute or computes or computing or measur$6)) same ((select$3 or choos$3 or allocat$4) near3 resource$1)	US-PGPUB; USPAT; EPO; JPO; DERWENT; IBM_TDB	OR	OFF	2016/11/23 15:20
L52	26	(((processing or executing or execution) adj cost) with (determin$5 or estimat$4 or calculat$4 or compute or computes or computing or measur$6)) with ((select$3 or choos$3 or allocat$4) near3 resource$1)	US-PGPUB; USPAT; EPO; JPO; DERWENT; IBM_TDB	OR	OFF	2016/11/23 15:20
L53	149	(((processing or executing or execution) adj cost) same (determin$5 or estimat$4 or calculat$4 or compute or computes or computing or measur$6)) same ((select$3 or choos$3 or allocat$4) near3 (process$2 or task$1 or operation$1 or (software adj (module$1 or unit$1 or component$1))))	US-PGPUB; USPAT; EPO; JPO; DERWENT; IBM_TDB	OR	OFF	2016/11/23 15:20
L54	57	(((processing or executing or execution) adj cost) with (determin$5 or estimat$4 or calculat$4 or compute or computes or computing or measur$6)) with ((select$3 or choos$3 or allocat$4) near3 (process$2 or task$1 or operation$1 or (software adj (module$1 or unit$1 or component$1))))	US-PGPUB; USPAT; EPO; JPO; DERWENT; IBM_TDB	OR	OFF	2016/11/23 15:20
L55	83	L53 and resource$1	US-PGPUB; USPAT; EPO; JPO; DERWENT; IBM_TDB	OR	OFF	2016/11/23 15:20
L56	22	L54 and resource$1	US-PGPUB; USPAT; EPO; JPO; DERWENT; IBM_TDB	OR	OFF	2016/11/23 15:20
L57	186	(((processing or executing or execution) adj cost) same (determin$5 or estimat$4 or	US-PGPUB; USPAT;	OR	OFF	2016/11/23 15:20

		calculat$4 or compute or computes or computing or computed or measur$6)) same ((select$3 or choos$3 or allocat$4) near3 (resource$1 or process$2 or task$1 or operation$1 or (software adj (module$1 or unit$1 or component$1))))	EPO; JPO; DERWENT; IBM_TDB			
L58	79	(((processing or executing or execution) adj cost) with (determin$5 or estimat$4 or calculat$4 or compute or computes or computing or computed or measur$6)) with ((select$3 or choos$3 or allocat$4) near3 (resource$1 or process$2 or task$1 or operation$1 or (software adj (module$1 or unit$1 or component$1))))	US-PGPUB; USPAT; EPO; JPO; DERWENT; IBM_TDB	OR	OFF	2016/11/23 15:20
L59	390	(((processing or executing or execution) adj cost) same (determin$5 or estimat$4 or calculat$4 or compute or computes or computing or computed or measur$6)).clm.	US-PGPUB; USPAT; EPO; JPO; DERWENT; IBM_TDB	OR	OFF	2016/11/23 15:20
L60	348	(((processing or executing or execution) adj cost) with (determin$5 or estimat$4 or calculat$4 or compute or computes or computing or computed or measur$6)).clm.	US-PGPUB; USPAT; EPO; JPO; DERWENT; IBM_TDB	OR	OFF	2016/11/23 15:20
L61	201	L59 and ((select$3 or choos$3 or allocat$4) near3 (resource$1 or process$2 or task$1 or operation$1 or (software adj (module$1 or unit$1 or component$1))))	US-PGPUB; USPAT; EPO; JPO; DERWENT; IBM_TDB	OR	OFF	2016/11/23 15:20
L62	181	L60 and ((select$3 or choos$3 or allocat$4) near3 (resource$1 or process$2 or task$1 or operation$1 or (software adj (module$1 or unit$1 or component$1))))	US-PGPUB; USPAT; EPO; JPO; DERWENT; IBM_TDB	OR	OFF	2016/11/23 15:20
L63	52	"713".clas. and (((processing or executing or execution) adj cost) same (determin$5 or estimat$4 or calculat$4 or compute or computes or computing or computed or measur$6))	US-PGPUB; USPAT; EPO; JPO; DERWENT; IBM_TDB	OR	OFF	2016/11/23 15:20
L64	21	"713".clas. and (((processing or executing or execution) adj cost) with (determin$5 or estimat$4 or calculat$4 or compute or computes or computing or computed or measur$6))	US-PGPUB; USPAT; EPO; JPO; DERWENT; IBM_TDB	OR	OFF	2016/11/23 15:20
L65	32	L63 and ((select$3 or choos$3 or allocat$4) near3 (resource$1 or process$2 or task$1 or operation$1 or (software adj (module$1 or unit$1 or component$1))))	US-PGPUB; USPAT; EPO; JPO; DERWENT; IBM_TDB	OR	OFF	2016/11/23 15:20
L66	15	L64 and ((select$3 or choos$3 or allocat$4) near3 (resource$1 or process$2 or task$1 or operation$1 or (software adj (module$1 or unit$1 or component$1))))	US-PGPUB; USPAT; EPO; JPO; DERWENT; IBM_TDB	OR	OFF	2016/11/23 15:20
L67	84	"700".clas. and (((processing or executing or execution) adj cost) same (determin$5 or estimat$4 or calculat$4 or compute or computes or computing or computed or measur$6))	US-PGPUB; USPAT; EPO; JPO; DERWENT; IBM_TDB	OR	OFF	2016/11/23 15:20
L68	59	"700".clas. and (((processing or executing	US-PGPUB;	OR	OFF	2016/11/23

		or execution) adj cost) with (determin$5 or estimat$4 or calculat$4 or compute or computes or computing or computed or measur$6))	USPAT; EPO; JPO; DERWENT; IBM_TDB			15:20
L69	35	L67 and ((select$3 or choos$3 or allocat$4) near3 (resource$1 or process$2 or task$1 or operation$1 or (software adj (module$1 or unit$1 or component$1))))	US-PGPUB; USPAT; EPO; JPO; DERWENT; IBM_TDB	OR	OFF	2016/11/23 15:20
L70	23	L68 and ((select$3 or choos$3 or allocat$4) near3 (resource$1 or process$2 or task$1 or operation$1 or (software adj (module$1 or unit$1 or component$1))))	US-PGPUB; USPAT; EPO; JPO; DERWENT; IBM_TDB	OR	OFF	2016/11/23 15:20
L71	58	"702".clas. and (((processing or executing or execution) adj cost) same (determin$5 or estimat$4 or calculat$4 or compute or computes or computing or computed or measur$6))	US-PGPUB; USPAT; EPO; JPO; DERWENT; IBM_TDB	OR	OFF	2016/11/23 15:20
L72	35	"702".clas. and (((processing or executing or execution) adj cost) with (determin$5 or estimat$4 or calculat$4 or compute or computes or computing or computed or measur$6))	US-PGPUB; USPAT; EPO; JPO; DERWENT; IBM_TDB	OR	OFF	2016/11/23 15:20
L73	17	L71 and ((select$3 or choos$3 or allocat$4) near3 (resource$1 or process$2 or task$1 or operation$1 or (software adj (module$1 or unit$1 or component$1))))	US-PGPUB; USPAT; EPO; JPO; DERWENT; IBM_TDB	OR	OFF	2016/11/23 15:20
L74	14	L72 and ((select$3 or choos$3 or allocat$4) near3 (resource$1 or process$2 or task$1 or operation$1 or (software adj (module$1 or unit$1 or component$1))))	US-PGPUB; USPAT; EPO; JPO; DERWENT; IBM_TDB	OR	OFF	2016/11/23 15:20
L75	5262	((processing or executing or execution) adj cost) same (power or energy)	US-PGPUB; USPAT; EPO; JPO; DERWENT; IBM_TDB	OR	OFF	2016/11/23 15:20
L76	3391	((processing or executing or execution) adj cost) with (power or energy)	US-PGPUB; USPAT; EPO; JPO; DERWENT; IBM_TDB	OR	OFF	2016/11/23 15:20
L77	33	L75 same ((select$3 or choos$3 or allocat$4) near3 (resource$1 or process$2 or task$1 or operation$1 or (software adj (module$1 or unit$1 or component$1))))	US-PGPUB; USPAT; EPO; JPO; DERWENT; IBM_TDB	OR	OFF	2016/11/23 15:20
L78	15	L76 with ((select$3 or choos$3 or allocat$4) near3 (resource$1 or process$2 or task$1 or operation$1 or (software adj (module$1 or unit$1 or component$1))))	US-PGPUB; USPAT; EPO; JPO; DERWENT; IBM_TDB	OR	OFF	2016/11/23 15:20
L79	303	L75 and ((select$3 or choos$3 or allocat$4) near3 (resource$1 or process$2 or task$1 or operation$1 or (software adj (module$1 or unit$1 or component$1))))	US-PGPUB; USPAT; EPO; JPO; DERWENT; IBM_TDB	OR	OFF	2016/11/23 15:20
L80	174	L76 and ((select$3 or choos$3 or allocat$4)	US-PGPUB;	OR	OFF	2016/11/23

		near3 (resource$1 or process$2 or task$1 or operation$1 or (software adj (module$1 or unit$1 or component$1))))	USPAT; EPO; JPO; DERWENT; IBM_TDB			15:20
L81	107	((processing or executing or execution) adj cost) same (battery near2 (power or energy or charg$3))	US-PGPUB; USPAT; EPO; JPO; DERWENT; IBM_TDB	OR	OFF	2016/11/23 15:20
L82	56	((processing or executing or execution) adj cost) with (battery near2 (power or energy or charg$3))	US-PGPUB; USPAT; EPO; JPO; DERWENT; IBM_TDB	OR	OFF	2016/11/23 15:20
L83	104	((processing or executing or execution) adj cost) same ((determin$5 or estimat$4 or calculat$4 or compute or computes or computing or measur$6) near3 (power or energy))	US-PGPUB; USPAT; EPO; JPO; DERWENT; IBM_TDB	OR	OFF	2016/11/23 15:20
L84	56	((processing or executing or execution) adj cost) with ((determin$5 or estimat$4 or calculat$4 or compute or computes or computing or measur$6) near3 (power or energy))	US-PGPUB; USPAT; EPO; JPO; DERWENT; IBM_TDB	OR	OFF	2016/11/23 15:20
L85	4	12/857851	US-PGPUB; USPAT; EPO; JPO; DERWENT; IBM_TDB	OR	OFF	2016/11/23 15:20
L86	4	L85 and (computer adj readable)	US-PGPUB; USPAT; EPO; JPO; DERWENT; IBM_TDB	OR	OFF	2016/11/23 15:20
L87	4	12/857851	US-PGPUB; USPAT; EPO; JPO; DERWENT; IBM_TDB	OR	OFF	2016/11/23 15:20
L88	4	L87 and (cost adj advisor adj component)	US-PGPUB; USPAT; EPO; JPO; DERWENT; IBM_TDB	OR	OFF	2016/11/23 15:20
L89	4	12/857851	US-PGPUB; USPAT; EPO; JPO; DERWENT; IBM_TDB	OR	OFF	2016/11/23 15:20
L90	4	L89 and user	US-PGPUB; USPAT; EPO; JPO; DERWENT; IBM_TDB	OR	OFF	2016/11/23 15:20
L91	8	G06F9/50.cpc. and (((processing or executing or execution) adj cost) same measur$6)	US-PGPUB; USPAT; EPO; JPO; DERWENT; IBM_TDB	OR	OFF	2016/11/23 15:20
L92	10	G06F9/5027.cpc. and (((processing or	US-PGPUB;	OR	OFF	2016/11/23

		executing or execution) adj cost) same measur$6)	USPAT; EPO; JPO; DERWENT; IBM_TDB			15:20
L93	24	G06F9/50.cpc. and (((processing or executing or execution) adj cost) same (determin$5 or estimat$4 or calculat$4 or compute or computes or computing or computed or measur$6))	US-PGPUB; USPAT; EPO; JPO; DERWENT; IBM_TDB	OR	OFF	2016/11/23 15:20
L94	30	G06F9/5027.cpc. and (((processing or executing or execution) adj cost) same (determin$5 or estimat$4 or calculat$4 or compute or computes or computing or computed or measur$6))	US-PGPUB; USPAT; EPO; JPO; DERWENT; IBM_TDB	OR	OFF	2016/11/23 15:20
L95	20	G06F9/50.cpc. and (((processing or executing or execution) adj cost) with (determin$5 or estimat$4 or calculat$4 or compute or computes or computing or computed or measur$6))	US-PGPUB; USPAT; EPO; JPO; DERWENT; IBM_TDB	OR	OFF	2016/11/23 15:20
L96	25	G06F9/5027.cpc. and (((processing or executing or execution) adj cost) with (determin$5 or estimat$4 or calculat$4 or compute or computes or computing or computed or measur$6))	US-PGPUB; USPAT; EPO; JPO; DERWENT; IBM_TDB	OR	OFF	2016/11/23 15:20

EAST Search History (Interference)

<This search history is empty>

11/23/2016 3:29:47 PM
C:\Users\sstoynov1\Documents\EAST\Workspaces\14667642.wsp

Index of Claims	Application/Control No.	Applicant(s)/Patent Under Reexamination
	14667642	MORRIS, ROBERT PAUL
	Examiner	**Art Unit**
	STEFAN STOYNOV	2116

✓	Rejected	-	Cancelled	N	Non-Elected	A	Appeal
=	Allowed	÷	Restricted	I	Interference	O	Objected

☐ Claims renumbered in the same order as presented by applicant ☐ CPA ☐ T.D. ☐ R.1.47

CLAIM		DATE								
Final	Original	11/23/2016								
	1	✓								
	2	✓								
	3	✓								
	4	✓								
	5	✓								
	6	✓								
	7	✓								
	8	✓								
	9	✓								
	10	✓								
	11	✓								
	12	✓								
	13	✓								
	14	✓								
	15	✓								
	16	✓								
	17	✓								
	18	✓								
	19	✓								
	20	✓								

UNITED STATES PATENT AND TRADEMARK OFFICE

UNITED STATES DEPARTMENT OF COMMERCE
United States Patent and Trademark Office
Address: COMMISSIONER FOR PATENTS
P.O. Box 1450
Alexandria, Virginia 22313-1450
www.uspto.gov

APPLICATION NUMBER	FILING OR 371(C) DATE	FIRST NAMED APPLICANT	ATTY. DOCKET NO./TITLE
14/667,642	03/24/2015	Robert Paul Morris	PMOR0162B

CONFIRMATION NO. 1029

92045
The Caldwell Firm, LLC
PO Box 59655
Dept. SVIPGP
Dallas, TX 75229

PUBLICATION NOTICE

OC000000087133812

Title:METHODS, SYSTEMS, AND COMPUTER PROGRAM PRODUCTS FOR SELECTING A RESOURCE BASED ON A MEASURE OF A PROCESSING COST

Publication No.US-2016-0330274-A1
Publication Date:11/10/2016

NOTICE OF PUBLICATION OF APPLICATION

The above-identified application will be electronically published as a patent application publication pursuant to 37 CFR 1.211, et seq. The patent application publication number and publication date are set forth above.

The publication may be accessed through the USPTO's publically available Searchable Databases via the Internet at www.uspto.gov. The direct link to access the publication is currently http://www.uspto.gov/patft/.

The publication process established by the Office does not provide for mailing a copy of the publication to applicant. A copy of the publication may be obtained from the Office upon payment of the appropriate fee set forth in 37 CFR 1.19(a)(1). Orders for copies of patent application publications are handled by the USPTO's Office of Public Records. The Office of Public Records can be reached by telephone at (703) 308-9726 or (800) 972-6382, by facsimile at (703) 305-8759, by mail addressed to the United States Patent and Trademark Office, Office of Public Records, Alexandria, VA 22313-1450 or via the Internet.

In addition, information on the status of the application, including the mailing date of Office actions and the dates of receipt of correspondence filed in the Office, may also be accessed via the Internet through the Patent Electronic Business Center at www.uspto.gov using the public side of the Patent Application Information and Retrieval (PAIR) system. The direct link to access this status information is currently http://pair.uspto.gov/. Prior to publication, such status information is confidential and may only be obtained by applicant using the private side of PAIR.

Further assistance in electronically accessing the publication, or about PAIR, is available by calling the Patent Electronic Business Center at 1-866-217-9197.

Office of Data Managment, Application Assistance Unit (571) 272-4000, or (571) 272-4200, or 1-888-786-0101

UNITED STATES PATENT AND TRADEMARK OFFICE

UNITED STATES DEPARTMENT OF COMMERCE
United States Patent and Trademark Office
Address: COMMISSIONER FOR PATENTS
P.O. Box 1450
Alexandria, Virginia 22313-1450
www.uspto.gov

APPLICATION NUMBER	FILING or 371(c) DATE	GRP ART UNIT	FIL FEE REC'D	ATTY.DOCKET.NO	TOT CLAIMS	IND CLAIMS
14/667,642	03/24/2015	2447	800	PMOR0162B	20	3

CONFIRMATION NO. 1029

UPDATED FILING RECEIPT

92045
The Caldwell Firm, LLC
PO Box 59655
Dept. SVIPGP
Dallas, TX 75229

Date Mailed: 08/04/2016

Receipt is acknowledged of this non-provisional patent application. The application will be taken up for examination in due course. Applicant will be notified as to the results of the examination. Any correspondence concerning the application must include the following identification information: the U.S. APPLICATION NUMBER, FILING DATE, NAME OF APPLICANT, and TITLE OF INVENTION. Fees transmitted by check or draft are subject to collection. Please verify the accuracy of the data presented on this receipt. **If an error is noted on this Filing Receipt, please submit a written request for a Filing Receipt Correction. Please provide a copy of this Filing Receipt with the changes noted thereon. If you received a "Notice to File Missing Parts" for this application, please submit any corrections to this Filing Receipt with your reply to the Notice. When the USPTO processes the reply to the Notice, the USPTO will generate another Filing Receipt incorporating the requested corrections**

Inventor(s)

Robert Paul Morris, Raleigh, NC;

Applicant(s)

SITTING MAN, LLC, Raleigh, NC;

Assignment For Published Patent Application

SITTING MAN, LLC, Raleigh, NC

Power of Attorney: The patent practitioners associated with Customer Number 92045

Domestic Priority data as claimed by applicant

This appln claims benefit of 62/137,173 03/23/2015
and is a CIP of 14/294,059 06/02/2014 ABN
which is a CON of 12/857,851 08/17/2010 PAT 8745418
This application 14/667,642
is a CIP of 13/941,502 07/14/2013 ABN
which is a CON of 12/789,550 05/28/2010 PAT 8577958
This application 14/667,642
is a CIP of 13/477,402 05/22/2012 ABN
which is a CON of 12/714,454 02/27/2010 PAT 8219606

Foreign Applications for which priority is claimed (You may be eligible to benefit from the **Patent Prosecution Highway** program at the USPTO. Please see http://www.uspto.gov for more information.) - None.
Foreign application information must be provided in an Application Data Sheet in order to constitute a claim to foreign priority. See 37 CFR 1.55 and 1.76.

Permission to Access Application via Priority Document Exchange: No

Permission to Access Search Results: No

Applicant may provide or rescind an authorization for access using Form PTO/SB/39 or Form PTO/SB/69 as appropriate.

If Required, Foreign Filing License Granted: 04/03/2015

The country code and number of your priority application, to be used for filing abroad under the Paris Convention, is **US 14/667,642**

Projected Publication Date: 11/10/2016

Non-Publication Request: No

Early Publication Request: No
**** SMALL ENTITY ****
Title

METHODS, SYSTEMS, AND COMPUTER PROGRAM PRODUCTS FOR SELECTING A RESOURCE BASED ON A MEASURE OF A PROCESSING COST

Preliminary Class

709

Statement under 37 CFR 1.55 or 1.78 for AIA (First Inventor to File) Transition Applications: No

PROTECTING YOUR INVENTION OUTSIDE THE UNITED STATES

Since the rights granted by a U.S. patent extend only throughout the territory of the United States and have no effect in a foreign country, an inventor who wishes patent protection in another country must apply for a patent in a specific country or in regional patent offices. Applicants may wish to consider the filing of an international application under the Patent Cooperation Treaty (PCT). An international (PCT) application generally has the same effect as a regular national patent application in each PCT-member country. The PCT process **simplifies** the filing of patent applications on the same invention in member countries, but **does not result** in a grant of "an international patent" and does not eliminate the need of applicants to file additional documents and fees in countries where patent protection is desired.

Almost every country has its own patent law, and a person desiring a patent in a particular country must make an application for patent in that country in accordance with its particular laws. Since the laws of many countries differ in various respects from the patent law of the United States, applicants are advised to seek guidance from specific foreign countries to ensure that patent rights are not lost prematurely.

Applicants also are advised that in the case of inventions made in the United States, the Director of the USPTO must issue a license before applicants can apply for a patent in a foreign country. The filing of a U.S. patent application serves as a request for a foreign filing license. The application's filing receipt contains further information and guidance as to the status of applicant's license for foreign filing.

Applicants may wish to consult the USPTO booklet, "General Information Concerning Patents" (specifically, the section entitled "Treaties and Foreign Patents") for more information on timeframes and deadlines for filing foreign patent applications. The guide is available either by contacting the USPTO Contact Center at 800-786-9199, or it can be viewed on the USPTO website at http://www.uspto.gov/web/offices/pac/doc/general/index.html.

For information on preventing theft of your intellectual property (patents, trademarks and copyrights), you may wish to consult the U.S. Government website, http://www.stopfakes.gov. Part of a Department of Commerce initiative, this website includes self-help "toolkits" giving innovators guidance on how to protect intellectual property in specific countries such as China, Korea and Mexico. For questions regarding patent enforcement issues, applicants may call the U.S. Government hotline at 1-866-999-HALT (1-866-999-4258).

LICENSE FOR FOREIGN FILING UNDER

Title 35, United States Code, Section 184

Title 37, Code of Federal Regulations, 5.11 & 5.15

GRANTED

The applicant has been granted a license under 35 U.S.C. 184, if the phrase "IF REQUIRED, FOREIGN FILING LICENSE GRANTED" followed by a date appears on this form. Such licenses are issued in all applications where the conditions for issuance of a license have been met, regardless of whether or not a license may be required as set forth in 37 CFR 5.15. The scope and limitations of this license are set forth in 37 CFR 5.15(a) unless an earlier license has been issued under 37 CFR 5.15(b). The license is subject to revocation upon written notification. The date indicated is the effective date of the license, unless an earlier license of similar scope has been granted under 37 CFR 5.13 or 5.14.

This license is to be retained by the licensee and may be used at any time on or after the effective date thereof unless it is revoked. This license is automatically transferred to any related applications(s) filed under 37 CFR 1.53(d). This license is not retroactive.

The grant of a license does not in any way lessen the responsibility of a licensee for the security of the subject matter as imposed by any Government contract or the provisions of existing laws relating to espionage and the national security or the export of technical data. Licensees should apprise themselves of current regulations especially with respect to certain countries, of other agencies, particularly the Office of Defense Trade Controls, Department of State (with respect to Arms, Munitions and Implements of War (22 CFR 121-128)); the Bureau of Industry and Security, Department of Commerce (15 CFR parts 730-774); the Office of Foreign AssetsControl, Department of Treasury (31 CFR Parts 500+) and the Department of Energy.

NOT GRANTED

No license under 35 U.S.C. 184 has been granted at this time, if the phrase "IF REQUIRED, FOREIGN FILING LICENSE GRANTED" DOES NOT appear on this form. Applicant may still petition for a license under 37 CFR 5.12, if a license is desired before the expiration of 6 months from the filing date of the application. If 6 months has lapsed from the filing date of this application and the licensee has not received any indication of a secrecy order under 35 U.S.C. 181, the licensee may foreign file the application pursuant to 37 CFR 5.15(b).

SelectUSA

The United States represents the largest, most dynamic marketplace in the world and is an unparalleled location for business investment, innovation, and commercialization of new technologies. The U.S. offers tremendous resources and advantages for those who invest and manufacture goods here. Through SelectUSA, our nation works to promote and facilitate business investment. SelectUSA provides information assistance to the international investor

community; serves as an ombudsman for existing and potential investors; advocates on behalf of U.S. cities, states, and regions competing for global investment; and counsels U.S. economic development organizations on investment attraction best practices. To learn more about why the United States is the best country in the world to develop technology, manufacture products, deliver services, and grow your business, visit http://www.SelectUSA.gov or call +1-202-482-6800.

PATENT APPLICATION FEE DETERMINATION RECORD Substitute for Form PTO-875	Application or Docket Number 14/667,642

APPLICATION AS FILED - PART I

FOR	(Column 1) NUMBER FILED	(Column 2) NUMBER EXTRA	SMALL ENTITY RATE($)	SMALL ENTITY FEE($)	OR	OTHER THAN SMALL ENTITY RATE($)	OTHER THAN SMALL ENTITY FEE($)
BASIC FEE (37 CFR 1.16(a), (b), or (c))	N/A	N/A	N/A	70		N/A	
SEARCH FEE (37 CFR 1.16(k), (i), or (m))	N/A	N/A	N/A	300		N/A	
EXAMINATION FEE (37 CFR 1.16(o), (p), or (q))	N/A	N/A	N/A	360		N/A	
TOTAL CLAIMS (37 CFR 1.16(i))	20 minus 20 =	*	x 40 =	0.00	OR		
INDEPENDENT CLAIMS (37 CFR 1.16(h))	3 minus 3 =	*	x 210 =	0.00			
APPLICATION SIZE FEE (37 CFR 1.16(s))	If the specification and drawings exceed 100 sheets of paper, the application size fee due is $310 ($155 for small entity) for each additional 50 sheets or fraction thereof. See 35 U.S.C. 41(a)(1)(G) and 37 CFR 1.16(s).			0.00			
MULTIPLE DEPENDENT CLAIM PRESENT (37 CFR 1.16(j))				0.00			
* If the difference in column 1 is less than zero, enter "0" in column 2.			TOTAL	730		TOTAL	

APPLICATION AS AMENDED - PART II

		(Column 1) CLAIMS REMAINING AFTER AMENDMENT		(Column 2) HIGHEST NUMBER PREVIOUSLY PAID FOR	(Column 3) PRESENT EXTRA	SMALL ENTITY RATE($)	SMALL ENTITY ADDITIONAL FEE($)	OR	OTHER THAN SMALL ENTITY RATE($)	OTHER THAN SMALL ENTITY ADDITIONAL FEE($)
AMENDMENT A	Total (37 CFR 1.16(i))	*	Minus	**	=	x =		OR	x =	
AMENDMENT A	Independent (37 CFR 1.16(h))	*	Minus	***	=	x =		OR	x =	
AMENDMENT A	Application Size Fee (37 CFR 1.16(s))									
AMENDMENT A	FIRST PRESENTATION OF MULTIPLE DEPENDENT CLAIM (37 CFR 1.16(j))							OR		
						TOTAL ADD'L FEE		OR	TOTAL ADD'L FEE	

		(Column 1) CLAIMS REMAINING AFTER AMENDMENT		(Column 2) HIGHEST NUMBER PREVIOUSLY PAID FOR	(Column 3) PRESENT EXTRA	RATE($)	ADDITIONAL FEE($)	OR	RATE($)	ADDITIONAL FEE($)
AMENDMENT B	Total (37 CFR 1.16(i))	*	Minus	**	=	x =		OR	x =	
AMENDMENT B	Independent (37 CFR 1.16(h))	*	Minus	***	=	x =		OR	x =	
AMENDMENT B	Application Size Fee (37 CFR 1.16(s))									
AMENDMENT B	FIRST PRESENTATION OF MULTIPLE DEPENDENT CLAIM (37 CFR 1.16(j))							OR		
						TOTAL ADD'L FEE		OR	TOTAL ADD'L FEE	

* If the entry in column 1 is less than the entry in column 2, write "0" in column 3.
** If the "Highest Number Previously Paid For" IN THIS SPACE is less than 20, enter "20".
*** If the "Highest Number Previously Paid For" IN THIS SPACE is less than 3, enter "3".
The "Highest Number Previously Paid For" (Total or Independent) is the highest found in the appropriate box in column 1.

Office of Petitions: Routing Sheet

4700

Application No. 14/667,642

This application is being forwarded to your office for further processing. A decision has been rendered on a petition filed in this application, as indicated below. For details of this decision, please see the document PET.OP.DEC filed on the same date as this document.

- [X] **GRANTED**
- [ ] **DISMISSED**
- [ ] **DENIED**

Office of Petitions: Decision Count Sheet

Mailing Month 7

Application No. 14667642

14667642

For US serial numbers: enter number only, no slashes or commas. Ex: 10123456
For PCT: enter "51+single digit of year of filing+last 5 numbers", Ex. for PCT/US05/12345, enter 51512345

Deciding Official: Johnson, Terri

Count (1) - Palm Credit 14/667,642

Decision: GRANT

FINANCE WORK NEEDED
☐ Select Check Box for YES

GRANT

Decision Type: 502 - 37 CFR 1.137(b) - REVIVAL BASED ON UNINTENTIC

502

Notes:

Count (2)

Decision: n/a

FINANCE WORK NEEDED
☑ Select Check Box for YES

Decision Type: NONE

Notes:

Count (3)

Decision: n/a

FINANCE WORK NEEDED
☐ Select Check Box for YES

Decision Type: NONE

Notes:

Initials of Approving Official (if required)

If more than 3 decisions, attach 2nd count sheet & mark this box ☐

Printed on: *7/26/2016*

Office of Petitions Internal Document - Ver. 5.0

UNITED STATES PATENT AND TRADEMARK OFFICE

UNITED STATES DEPARTMENT OF COMMERCE
United States Patent and Trademark Office
Address: COMMISSIONER FOR PATENTS
P.O. Box 1450
Alexandria, Virginia 22313-1450
www.uspto.gov

APPLICATION NO.	FILING DATE	FIRST NAMED INVENTOR	ATTORNEY DOCKET NO.	CONFIRMATION NO.
14/667,642	03/24/2015	Robert Paul Morris	PMOR0162B	1029

92045 7590 07/29/2016
The Caldwell Firm, LLC
PO Box 59655
Dept. SVIPGP
Dallas, TX 75229

EXAMINER

ART UNIT	PAPER NUMBER
2447	

NOTIFICATION DATE	DELIVERY MODE
07/29/2016	ELECTRONIC

Please find below and/or attached an Office communication concerning this application or proceeding.

The time period for reply, if any, is set in the attached communication.

Notice of the Office communication was sent electronically on above-indicated "Notification Date" to the following e-mail address(es):

pcaldwell@thecaldwellfirm.com
eofficeaction@appcoll.com

PTOL-90A (Rev. 04/07)

UNITED STATES PATENT AND TRADEMARK OFFICE

Commissioner for Patents
United States Patent and Trademark Office
P.O. Box 1450
Alexandria, VA 22313-1450
www.uspto.gov

In re Application of	:	
Robert Paul Morris	:	
Application No. 14/667,642	:	DECISION ON PETITION
Filed: March 24, 2015	:	
Attorney Docket No. PMOR0162B	:	

This is a decision on the petition under the unintentional provisions of 37 CFR 1.137(a), filed November 10, 2015, to revive the above-identified application.

The petition is **GRANTED**.

The application became abandoned for failure to reply in a timely manner to the Notice to File Missing Parts of Nonprovisional Application (Notice), mailed April 6, 2015. The Notice set a period for reply of two (2) months from the mail date of the Notice. No extensions of time under the provisions of 37 CFR 1.136(a) were obtained. Accordingly, the application became abandoned on June 7, 2015.

The petition satisfies the requirements of 37 CFR 1.137(a) in that petitioner has supplied (1) the reply in the form of the statutory basic filing fee, surcharge, examination fee and search fee; (2) the petition fee of $850; and (3) a proper statement of unintentional delay.

Telephone inquiries concerning this decision should be directed to Terri Johnson at (571) 272-2991.

This application is being referred to the Office of Patent Application Processing for appropriate action in the normal course of business on the reply received.

/Terri Johnson/
Terri Johnson
Paralegal Specialist
Office of Petitions

PATENT

IN THE UNITED STATES PATENT AND TRADEMARK OFFICE

In re application of:	Confirmation No.: 1029
Robert Paul Morris	Examiner:
Application No.: 14/667,642	Art Unit: 2447
Filed: 3/24/2015	Atty. Docket No.: PMOR0162B
For: METHODS, SYSTEMS, AND COMPUTER PROGRAM PRODUCTS FOR SELECTING A RESOURCE BASED ON A MEASURE OF A PROCESSING COST	Date: 4/6/2016

RESPONSE TO NOTICE TO FILE MISSING PARTS OF NONPROVISIONAL APPLICATION

MS Missing Parts
Commissioner for Patents
P.O. Box 1450
Alexandria, VA 22313-1450

Sir:

In response to the Notice to File Missing Parts of Non-Provisional Application, mailed April 6, 2015, and in accordance with the Extended Missing Parts Pilot Program, applicant submits payment of $660 for search and examination fees.

The Commissioner is authorized to charge any other fee(s) that may be due to Deposit Account No. 50-5939 (Order No. PMOR0162B).

Respectfully submitted,

Dated: 06 Apr 2016

The Caldwell Firm, LLC
PO Box 59655
Dallas, Texas 75229-0655
Telephone: (214) 734-2313
pcaldwell@thecaldwellfirm.com

Patrick E. Caldwell, Esq.
Reg. No. 44,580

Electronic Patent Application Fee Transmittal

Application Number:	14667642
Filing Date:	24-Mar-2015
Title of Invention:	METHODS, SYSTEMS, AND COMPUTER PROGRAM PRODUCTS FOR SELECTING A RESOURCE BASED ON A MEASURE OF A PROCESSING COST
First Named Inventor/Applicant Name:	Robert Paul Morris
Filer:	Patrick Edgar Caldwell
Attorney Docket Number:	PMOR0162B

Filed as Small Entity

Filing Fees for Utility under 35 USC 111(a)

Description	Fee Code	Quantity	Amount	Sub-Total in USD($)
Basic Filing:				
Utility Search Fee	2111	1	300	300
Utility Examination Fee	2311	1	360	360
Pages:				
Claims:				
Miscellaneous-Filing:				
Petition:				
Patent-Appeals-and-Interference:				

Description	Fee Code	Quantity	Amount	Sub-Total in USD($)
Post-Allowance-and-Post-Issuance:				
Extension-of-Time:				
Miscellaneous:				
			Total in USD ($)	**660**

Electronic Acknowledgement Receipt

EFS ID:	25420763
Application Number:	14667642
International Application Number:	
Confirmation Number:	1029
Title of Invention:	METHODS, SYSTEMS, AND COMPUTER PROGRAM PRODUCTS FOR SELECTING A RESOURCE BASED ON A MEASURE OF A PROCESSING COST
First Named Inventor/Applicant Name:	Robert Paul Morris
Customer Number:	92045
Filer:	Patrick Edgar Caldwell
Filer Authorized By:	
Attorney Docket Number:	PMOR0162B
Receipt Date:	06-APR-2016
Filing Date:	24-MAR-2015
Time Stamp:	22:47:50
Application Type:	Utility under 35 USC 111(a)

Payment information:

Submitted with Payment	yes
Payment Type	Credit Card
Payment was successfully received in RAM	$660
RAM confirmation Number	9173
Deposit Account	
Authorized User	
The Director of the USPTO is hereby authorized to charge indicated fees and credit any overpayment as follows:	

File Listing:

Document Number	Document Description	File Name	File Size(Bytes)/ Message Digest	Multi Part /.zip	Pages (if appl.)
1	Applicant Response to Pre-Exam Formalities Notice	PMOR0162B_Missing_Parts_Resp_vF_06-Apr-2016.pdf	28404 f3b6178dbb838fbc2f62a407c68f12a7bb43e8dd	no	1
Warnings:					
Information:					
2	Fee Worksheet (SB06)	fee-info.pdf	32075 1d80c1a3600d138f74003e00b05290a6757a0e05	no	2
Warnings:					
Information:					
		Total Files Size (in bytes):	60479		

This Acknowledgement Receipt evidences receipt on the noted date by the USPTO of the indicated documents, characterized by the applicant, and including page counts, where applicable. It serves as evidence of receipt similar to a Post Card, as described in MPEP 503.

New Applications Under 35 U.S.C. 111
If a new application is being filed and the application includes the necessary components for a filing date (see 37 CFR 1.53(b)-(d) and MPEP 506), a Filing Receipt (37 CFR 1.54) will be issued in due course and the date shown on this Acknowledgement Receipt will establish the filing date of the application.

National Stage of an International Application under 35 U.S.C. 371
If a timely submission to enter the national stage of an international application is compliant with the conditions of 35 U.S.C. 371 and other applicable requirements a Form PCT/DO/EO/903 indicating acceptance of the application as a national stage submission under 35 U.S.C. 371 will be issued in addition to the Filing Receipt, in due course.

New International Application Filed with the USPTO as a Receiving Office
If a new international application is being filed and the international application includes the necessary components for an international filing date (see PCT Article 11 and MPEP 1810), a Notification of the International Application Number and of the International Filing Date (Form PCT/RO/105) will be issued in due course, subject to prescriptions concerning national security, and the date shown on this Acknowledgement Receipt will establish the international filing date of the application.

Doc Code: PET.OP
Document Description: Petition for Review by the Office of Petitions

PTO/SB/64 (12-13)
Approved for use through 07/31/2016. OMB 0651-0031
U.S. Patent and Trademark Office; U.S. DEPARTMENT OF COMMERCE
Under the Paperwork Reduction Act of 1995, no persons are required to respond to a collection of information unless it displays a valid OMB control number.

PETITION FOR REVIVAL OF AN APPLICATION FOR PATENT ABANDONED UNINTENTIONALLY UNDER 37 CFR 1.137(a)

Docket Number (Optional) PMOR0162B

First named inventor: Robert Paul Morris

Application No.: 14/667,642 Art Unit: 2447

Filed: 03-24-2015 Examiner: _____

Title: METHODS, SYSTEMS, AND COMPUTER PROGRAM PRODUCTS FOR SELECTING A RESOURCE BASED ON A MEASURE OF A PROCESSING

Attention: Office of Petitions
Mail Stop Petition
Commissioner for Patents
P.O. Box 1450
Alexandria, VA 22313-1450
FAX (571) 273-8300

NOTE: If information or assistance is needed in completing this form, please contact the Office of Petitions at (571) 272-3282.

The above-identified application became abandoned for failure to file a timely and proper reply to a notice or action by the United States Patent and Trademark Office. The date of abandonment is the day after the expiration date of the period set for reply in the Office notice or action plus any extensions of time actually obtained.

APPLICANT HEREBY PETITIONS FOR REVIVAL OF THIS APPLICATION.

NOTE: A grantable petition requires the following items:

(1) Petition fee;
(2) Reply and/or issue fee;
(3) Terminal disclaimer with disclaimer fee – required for all utility and plant applications filed before June 8, 1995, and for all design applications; and
(4) Statement that the entire delay was unintentional.

1. **Petition fee**

☑ Small entity fee $ 850 (37 CFR 1.17(m)). Applicant asserts small entity status. See 37 CFR 1.27.

☐ Undiscounted fee $ _____ (37.CFR.1.17(m)).

2. **Reply and/or fee**

A The reply and/or fee to the above-noted Office notice or action in the form of

_____ (identify the type of reply):

☐ has been filed previously on _____.

☑ is enclosed herewith.

B The issue fee and publication fee (if applicable) of $ _____

☐ has been paid previously on _____.

☐ is enclosed herewith.

This collection of information is required by 37 CFR 1.137(a). The information is required to obtain or retain a benefit by the public which is to file (and by the USPTO to process) an application. Confidentiality is governed by 35 U.S.C. 122 and 37 CFR 1.11, 1.14 and 41.6. This collection is estimated to take 1 hour to complete, including gathering, preparing, and submitting the completed application form to the USPTO. Time will vary depending upon the individual case. Any comments on the amount of time you require to complete this form and/or suggestions for reducing this burden, should be sent to the Chief Information Officer, U.S. Patent and Trademark Office, U.S. Department of Commerce, P.O. Box 1450, Alexandria, VA 22313-1450. DO NOT SEND FEES OR COMPLETED FORMS TO THIS ADDRESS. **SEND TO: Mail Stop Petition, Commissioner for Patents, P.O. Box 1450, Alexandria, VA 22313-1450.**

If you need assistance in completing the form, call 1-800-PTO-9199 and select option 2.

PTO/SB/64 (12-13)
Approved for use through 07/31/2016. OMB 0651-0031
U.S. Patent and Trademark Office; U.S. DEPARTMENT OF COMMERCE
Under the Paperwork Reduction Act of 1995, no persons are required to respond to a collection of information unless it displays a valid OMB control number.

PETITION FOR REVIVAL OF AN APPLICATION FOR PATENT ABANDONED UNINTENTIONALLY UNDER 37 CFR 1.137(a)

3. **Terminal disclaimer with disclaimer fee**

☑ Since this utility/plant application was filed on or after June 8, 1995, no terminal disclaimer is required.

☐ A terminal disclaimer (and disclaimer fee (37 CFR 1.20(d)) of $ _____) disclaiming the required period of time is enclosed herewith (see PTO/SB/63).

4. **STATEMENT:** The entire delay in filing the required reply from the due date for the required reply until the filing of a grantable petition under 37 CFR 1.137(a) was unintentional. [NOTE: The United States Patent and Trademark Office may require additional information if there is a question as to whether either the abandonment or the delay in filing a petition under 37 CFR 1.137(a) was unintentional (MPEP 711.03(c), subsections (III)(C) and (D)).]

WARNING:

Petitioner/applicant is cautioned to avoid submitting personal information in documents filed in a patent application that may contribute to identity theft. Personal information such as social security numbers, bank account numbers, or credit card numbers (other than a check or credit card authorization form PTO-2038 submitted for payment purposes) is never required by the USPTO to support a petition or an application. If this type of personal information is included in documents submitted to the USPTO, petitioners/applicants should consider redacting such personal information from the documents before submitting them to the USPTO. Petitioner/applicant is advised that the record of a patent application is available to the public after publication of the application (unless a non-publication request in compliance with 37 CFR 1.213(a) is made in the application) or issuance of a patent. Furthermore, the record from an abandoned application may also be available to the public if the application is referenced in a published application or an issued patent (see 37 CFR 1.14). Checks and credit card authorization forms PTO-2038 submitted for payment purposes are not retained in the application file and therefore are not publicly available.

/Patrick E. Caldwell/	11/10/2015
Signature	Date
Patrick E. Caldwell	44580
Typed or Printed Name	Registration Number, if applicable
PO Box 59655	
Address	Telephone Number
Dallas TX 75229	
Address	

Enclosures:

☑ Fee Payment

☐ Reply

☐ Terminal Disclaimer Form

☐ Additional sheet(s) containing statements establishing unintentional delay

☐ Other: _____

CERTIFICATE OF MAILING OR TRANSMISSION [37 CFR 1.8(a)]

I hereby certify that this correspondence is being:

☐ Deposited with the United States Postal Service on the date shown below with sufficient postage as first class mail in an envelope addressed to: Mail Stop Petition, Commissioner for Patents, P. O. Box 1450, Alexandria, VA 22313-1450.

☑ Transmitted by EFS-Web or facsimile on the date shown below to the United States Patent and Trademark Office at (571) 273-8300.

11/10/2015	/Patrick E. Caldwell/
Date	Signature
	Patrick E. Caldwell
	Typed or printed name of person signing certificate

Privacy Act Statement

The **Privacy Act of 1974 (P.L. 93-579)** requires that you be given certain information in connection with your submission of the attached form related to a patent application or patent. Accordingly, pursuant to the requirements of the Act, please be advised that: (1) the general authority for the collection of this information is 35 U.S.C. 2(b)(2); (2) furnishing of the information solicited is voluntary; and (3) the principal purpose for which the information is used by the U.S. Patent and Trademark Office is to process and/or examine your submission related to a patent application or patent. If you do not furnish the requested information, the U.S. Patent and Trademark Office may not be able to process and/or examine your submission, which may result in termination of proceedings or abandonment of the application or expiration of the patent.

The information provided by you in this form will be subject to the following routine uses:

1. The information on this form will be treated confidentially to the extent allowed under the Freedom of Information Act (5 U.S.C. 552) and the Privacy Act (5 U.S.C 552a). Records from this system of records may be disclosed to the Department of Justice to determine whether disclosure of these records is required by the Freedom of Information Act.
2. A record from this system of records may be disclosed, as a routine use, in the course of presenting evidence to a court, magistrate, or administrative tribunal, including disclosures to opposing counsel in the course of settlement negotiations.
3. A record in this system of records may be disclosed, as a routine use, to a Member of Congress submitting a request involving an individual, to whom the record pertains, when the individual has requested assistance from the Member with respect to the subject matter of the record.
4. A record in this system of records may be disclosed, as a routine use, to a contractor of the Agency having need for the information in order to perform a contract. Recipients of information shall be required to comply with the requirements of the Privacy Act of 1974, as amended, pursuant to 5 U.S.C. 552a(m).
5. A record related to an International Application filed under the Patent Cooperation Treaty in this system of records may be disclosed, as a routine use, to the International Bureau of the World Intellectual Property Organization, pursuant to the Patent Cooperation Treaty.
6. A record in this system of records may be disclosed, as a routine use, to another federal agency for purposes of National Security review (35 U.S.C. 181) and for review pursuant to the Atomic Energy Act (42 U.S.C. 218(c)).
7. A record from this system of records may be disclosed, as a routine use, to the Administrator, General Services, or his/her designee, during an inspection of records conducted by GSA as part of that agency's responsibility to recommend improvements in records management practices and programs, under authority of 44 U.S.C. 2904 and 2906. Such disclosure shall be made in accordance with the GSA regulations governing inspection of records for this purpose, and any other relevant (*i.e.*, GSA or Commerce) directive. Such disclosure shall not be used to make determinations about individuals.
8. A record from this system of records may be disclosed, as a routine use, to the public after either publication of the application pursuant to 35 U.S.C. 122(b) or issuance of a patent pursuant to 35 U.S.C. 151. Further, a record may be disclosed, subject to the limitations of 37 CFR 1.14, as a routine use, to the public if the record was filed in an application which became abandoned or in which the proceedings were terminated and which application is referenced by either a published application, an application open to public inspection or an issued patent.
9. A record from this system of records may be disclosed, as a routine use, to a Federal, State, or local law enforcement agency, if the USPTO becomes aware of a violation or potential violation of law or regulation.

Electronic Patent Application Fee Transmittal

Application Number:	14667642
Filing Date:	24-Mar-2015
Title of Invention:	METHODS, SYSTEMS, AND COMPUTER PROGRAM PRODUCTS FOR SELECTING A RESOURCE BASED ON A MEASURE OF A PROCESSING COST
First Named Inventor/Applicant Name:	Robert Paul Morris
Filer:	Patrick Edgar Caldwell
Attorney Docket Number:	PMOR0162B

Filed as Small Entity

Filing Fees for Utility under 35 USC 111(a)

Description	Fee Code	Quantity	Amount	Sub-Total in USD($)
Basic Filing:				
Utility filing Fee (Electronic filing)	4011	1	70	70
Pages:				
Claims:				
Miscellaneous-Filing:				
Late Filing Fee for Oath or Declaration	2051	1	70	70
Petition:				
Pet. Revive Abandon App, Delay Pymt-Resp	2453	1	850	850
Patent-Appeals-and-Interference:				

Description	Fee Code	Quantity	Amount	Sub-Total in USD($)
Post-Allowance-and-Post-Issuance:				
Extension-of-Time:				
Miscellaneous:				
			Total in USD ($)	**990**

Electronic Acknowledgement Receipt	
EFS ID:	24045630
Application Number:	14667642
International Application Number:	
Confirmation Number:	1029
Title of Invention:	METHODS, SYSTEMS, AND COMPUTER PROGRAM PRODUCTS FOR SELECTING A RESOURCE BASED ON A MEASURE OF A PROCESSING COST
First Named Inventor/Applicant Name:	Robert Paul Morris
Customer Number:	92045
Filer:	Patrick Edgar Caldwell
Filer Authorized By:	
Attorney Docket Number:	PMOR0162B
Receipt Date:	10-NOV-2015
Filing Date:	24-MAR-2015
Time Stamp:	21:44:28
Application Type:	Utility under 35 USC 111(a)

Payment information:

Submitted with Payment	yes
Payment Type	Credit Card
Payment was successfully received in RAM	$990
RAM confirmation Number	6228
Deposit Account	
Authorized User	
The Director of the USPTO is hereby authorized to charge indicated fees and credit any overpayment as follows:	

File Listing:

Document Number	Document Description	File Name	File Size(Bytes)/ Message Digest	Multi Part /.zip	Pages (if appl.)
1	Applicant Response to Pre-Exam Formalities Notice	PMOR0162B_Missing_Parts_Resp_vF_10-Nov-2015.pdf	28311 3a0a3df74cb595e22095b7491a2255a66934a200	no	1
Warnings:					
Information:					
2	Petition for review by the Office of Petitions	PMOR0162B_Pet_to_Revive_vF_10-Nov-2015.pdf	158144 4385426027314bf8d8c4290442b4a7f18aeeb761	no	3
Warnings:					
Information:					
3	Fee Worksheet (SB06)	fee-info.pdf	36069 925512e08635aa87b739aa034d2b1599df7728fc	no	2
Warnings:					
Information:					
		Total Files Size (in bytes):	222524		

This Acknowledgement Receipt evidences receipt on the noted date by the USPTO of the indicated documents, characterized by the applicant, and including page counts, where applicable. It serves as evidence of receipt similar to a Post Card, as described in MPEP 503.

New Applications Under 35 U.S.C. 111
If a new application is being filed and the application includes the necessary components for a filing date (see 37 CFR 1.53(b)-(d) and MPEP 506), a Filing Receipt (37 CFR 1.54) will be issued in due course and the date shown on this Acknowledgement Receipt will establish the filing date of the application.

National Stage of an International Application under 35 U.S.C. 371
If a timely submission to enter the national stage of an international application is compliant with the conditions of 35 U.S.C. 371 and other applicable requirements a Form PCT/DO/EO/903 indicating acceptance of the application as a national stage submission under 35 U.S.C. 371 will be issued in addition to the Filing Receipt, in due course.

New International Application Filed with the USPTO as a Receiving Office
If a new international application is being filed and the international application includes the necessary components for an international filing date (see PCT Article 11 and MPEP 1810), a Notification of the International Application Number and of the International Filing Date (Form PCT/RO/105) will be issued in due course, subject to prescriptions concerning national security, and the date shown on this Acknowledgement Receipt will establish the international filing date of the application.

PATENT

IN THE UNITED STATES PATENT AND TRADEMARK OFFICE

In re application of:	Confirmation No.: 1029
Robert Paul Morris	Examiner:
Application No.: 14/667,642	Art Unit: 2447
Filed: 3/24/2015	Atty. Docket No.: PMOR0169B
For: METHODS, SYSTEMS, AND COMPUTER PROGRAM PRODUCTS FOR SELECTING A RESOURCE BASED ON A MEASURE OF A PROCESSING COST	Date: 11/10/2015

RESPONSE TO NOTICE TO FILE MISSING PARTS OF NONPROVISIONAL APPLICATION

MS Missing Parts
Commissioner for Patents
P.O. Box 1450
Alexandria, VA 22313-1450

Sir:

In response to the Notice to File Missing Parts of Non-Provisional Application, mailed April 6, 2015, applicant submits payment of $140 for deficient fees.

The Commissioner is authorized to charge any other fee(s) that may be due to Deposit Account No. 50-5939 (Order No. PMOR0169B).

Respectfully submitted,

Dated: 10 Nov 2015

The Caldwell Firm, LLC
PO Box 59655
Dallas, Texas 75229-0655
Telephone: (214) 734-2313
pcaldwell@thecaldwellfirm.com

Patrick E. Caldwell, Esq.
Reg. No. 44,580

UNITED STATES PATENT AND TRADEMARK OFFICE
COMMISSIONER FOR PATENTS
P.O.BOX 1450
ALEXANDRIA VA 22313-1451

PRESORTED
FIRST-CLASS MAIL
U.S. POSTAGE PAID
POSTEDIGITAL
NNNNN

The Caldwell Firm, LLC
PO Box 59655
Dept. SVIPGP
Dallas, TX 75229

Courtesy Reminder for
Application Serial No: 14/667,642

Attorney Docket No: PMOR0162B
Customer Number: 92045
Date of Electronic Notification: 04/06/2015

This is a courtesy reminder that new correspondence is available for this application. If you have not done so already, please review the correspondence. The official date of notification of the outgoing correspondence will be indicated on the form PTOL-90 accompanying the correspondence.

An email notification regarding the correspondence was sent to the following email address(es) associated with your customer number:
pcaldwell@thecaldwellfirm.com
lcaldwell@thecaldwellfirm.com

To view your correspondence online or update your email addresses, please visit us anytime at **https://sportal.uspto.gov/secure/myportal/privatepair.** If you have any questions, please email the Electronic Business Center (EBC) at EBC@uspto.gov or call 1-866-217-9197.

UNITED STATES PATENT AND TRADEMARK OFFICE

UNITED STATES DEPARTMENT OF COMMERCE
United States Patent and Trademark Office
Address: COMMISSIONER FOR PATENTS
P.O. Box 1450
Alexandria, Virginia 22313-1450
www.uspto.gov

APPLICATION NUMBER	FILING OR 371(C) DATE	FIRST NAMED APPLICANT	ATTY. DOCKET NO./TITLE
14/667,642	03/24/2015	Robert Paul Morris	PMOR0162B

CONFIRMATION NO. 1029

FORMALITIES LETTER

92045
The Caldwell Firm, LLC
PO Box 59655
Dept. SVIPGP
Dallas, TX 75229

OC000000074409794

Date Mailed: 04/06/2015

NOTICE TO FILE MISSING PARTS OF NONPROVISIONAL APPLICATION

FILED UNDER 37 CFR 1.53(b)

Filing Date Granted

Items Required To Avoid Abandonment:

An application number and filing date have been accorded to this application. The item(s) indicated below, however, are missing. Applicant is given **TWO MONTHS** from the date of this Notice within which to file all required items below to avoid abandonment. Extensions of time may be obtained by filing a petition accompanied by the extension fee under the provisions of 37 CFR 1.136(a).

- The statutory basic filing fee is missing.
- The application search fee must be submitted.
- The application examination fee must be submitted.
- Surcharge as set forth in 37 CFR 1.16(f) must be submitted.
  The surcharge is due for any one of:
  - late submission of the basic filing fee, search fee, or examination fee,
  - late submission of inventor's oath or declaration,
  - filing an application that does not contain at least one claim on filing, or
  - submission of an application filed by reference to a previously filed application.

SUMMARY OF FEES DUE:

The fee(s) required within **TWO MONTHS** from the date of this Notice to avoid abandonment is/are itemized below. Small entity discount is in effect. If applicant is qualified for micro entity status, an acceptable Certification of Micro Entity Status must be submitted to establish micro entity status. (See 37 CFR 1.29 and forms PTO/SB/15A and 15B.)

- $ **70** basic filing fee.
- $ **70** surcharge.
- $(**0**) previous unapplied payment amount.
- $ **140** TOTAL FEE BALANCE DUE.

The request for the Extended Missing Parts Pilot Program is acknowledged. Applicant is given **TWELVE MONTHS** from the date of this Notice within which to pay the search fee, the examination fee, any additional claims fees, and the surcharge set forth in 37 CFR 1.16(f) (for late submission of the search fee and examination fee unless the basic filing fee or an executed oath or declaration were not submitted on filing, in which case the

surcharge is due within the two month extendable time period) to avoid abandonment. Extensions of time under 37 CFR 1.136(a) are NOT available.

Total fee(s) required for a small entity within **TWELVE MONTHS** from the date of this Notice is/are:

- $ **300** search fee.
- $ **360** examination fee.
- $(**0.00**) previous unapplied payment amount.
- $ **660** TOTAL FEE BALANCE DUE.

Replies must be received in the USPTO within the set time period or must include a proper Certificate of Mailing or Transmission under 37 CFR 1.8 with a mailing or transmission date within the set time period. For more information and a suggested format, see Form PTO/SB/92 and MPEP 512.

Replies should be mailed to:

Mail Stop Missing Parts
Commissioner for Patents
P.O. Box 1450
Alexandria VA 22313-1450

Registered users of EFS-Web may alternatively submit their reply to this notice via EFS-Web, including a copy of this Notice and selecting the document description "Applicant response to Pre-Exam Formalities Notice". https://sportal.uspto.gov/authenticate/AuthenticateUserLocalEPF.html

For more information about EFS-Web please call the USPTO Electronic Business Center at **1-866-217-9197** or visit our website at http://www.uspto.gov/ebc.

If you are not using EFS-Web to submit your reply, you must include a copy of this notice.

/ttruong/

Office of Data Management, Application Assistance Unit (571) 272-4000, or (571) 272-4200, or 1-888-786-0101

PATENT APPLICATION FEE DETERMINATION RECORD

Substitute for Form PTO-875

Application or Docket Number
14/667,642

APPLICATION AS FILED - PART I

FOR	(Column 1) NUMBER FILED	(Column 2) NUMBER EXTRA	SMALL ENTITY RATE($)	SMALL ENTITY FEE($)	OR	OTHER THAN SMALL ENTITY RATE($)	OTHER THAN SMALL ENTITY FEE($)
BASIC FEE (37 CFR 1.16(a), (b), or (c))	N/A	N/A	N/A	70		N/A	
SEARCH FEE (37 CFR 1.16(k), (i), or (m))	N/A	N/A	N/A	300		N/A	
EXAMINATION FEE (37 CFR 1.16(o), (p), or (q))	N/A	N/A	N/A	360		N/A	
TOTAL CLAIMS (37 CFR 1.16(i))	20 minus 20 =	*	x 40 =	0.00	OR		
INDEPENDENT CLAIMS (37 CFR 1.16(h))	3 minus 3 =	*	x 210 =	0.00			
APPLICATION SIZE FEE (37 CFR 1.16(s))	If the specification and drawings exceed 100 sheets of paper, the application size fee due is $310 ($155 for small entity) for each additional 50 sheets or fraction thereof. See 35 U.S.C. 41(a)(1)(G) and 37 CFR 1.16(s).			0.00			
MULTIPLE DEPENDENT CLAIM PRESENT (37 CFR 1.16(j))				0.00			
* If the difference in column 1 is less than zero, enter "0" in column 2.			TOTAL	730		TOTAL	

APPLICATION AS AMENDED - PART II

AMENDMENT A

	(Column 1) CLAIMS REMAINING AFTER AMENDMENT		(Column 2) HIGHEST NUMBER PREVIOUSLY PAID FOR	(Column 3) PRESENT EXTRA	SMALL ENTITY RATE($)	SMALL ENTITY ADDITIONAL FEE($)	OR	OTHER THAN SMALL ENTITY RATE($)	OTHER THAN SMALL ENTITY ADDITIONAL FEE($)
Total (37 CFR 1.16(i))	*	Minus	**	=	x =		OR	x =	
Independent (37 CFR 1.16(h))	*	Minus	***	=	x =		OR	x =	
Application Size Fee (37 CFR 1.16(s))									
FIRST PRESENTATION OF MULTIPLE DEPENDENT CLAIM (37 CFR 1.16(j))							OR		
					TOTAL ADD'L FEE		OR	TOTAL ADD'L FEE	

AMENDMENT B

	(Column 1) CLAIMS REMAINING AFTER AMENDMENT		(Column 2) HIGHEST NUMBER PREVIOUSLY PAID FOR	(Column 3) PRESENT EXTRA	RATE($)	ADDITIONAL FEE($)	OR	RATE($)	ADDITIONAL FEE($)
Total (37 CFR 1.16(i))	*	Minus	**	=	x =		OR	x =	
Independent (37 CFR 1.16(h))	*	Minus	***	=	x =		OR	x =	
Application Size Fee (37 CFR 1.16(s))									
FIRST PRESENTATION OF MULTIPLE DEPENDENT CLAIM (37 CFR 1.16(j))							OR		
					TOTAL ADD'L FEE		OR	TOTAL ADD'L FEE	

* If the entry in column 1 is less than the entry in column 2, write "0" in column 3.
** If the "Highest Number Previously Paid For" IN THIS SPACE is less than 20, enter "20".
*** If the "Highest Number Previously Paid For" IN THIS SPACE is less than 3, enter "3".
The "Highest Number Previously Paid For" (Total or Independent) is the highest found in the appropriate box in column 1.

UNITED STATES PATENT AND TRADEMARK OFFICE

UNITED STATES DEPARTMENT OF COMMERCE
United States Patent and Trademark Office
Address: COMMISSIONER FOR PATENTS
P.O. Box 1450
Alexandria, Virginia 22313-1450
www.uspto.gov

APPLICATION NUMBER	FILING or 371(c) DATE	GRP ART UNIT	FIL FEE REC'D	ATTY.DOCKET.NO	TOT CLAIMS	IND CLAIMS
14/667,642	03/24/2015	2447	0.00	PMOR0162B	20	3

CONFIRMATION NO. 1029

92045
The Caldwell Firm, LLC
PO Box 59655
Dept. SVIPGP
Dallas, TX 75229

FILING RECEIPT

OC000000074409793

Date Mailed: 04/06/2015

Receipt is acknowledged of this non-provisional patent application. The application will be taken up for examination in due course. Applicant will be notified as to the results of the examination. Any correspondence concerning the application must include the following identification information: the U.S. APPLICATION NUMBER, FILING DATE, NAME OF APPLICANT, and TITLE OF INVENTION. Fees transmitted by check or draft are subject to collection. Please verify the accuracy of the data presented on this receipt. **If an error is noted on this Filing Receipt, please submit a written request for a Filing Receipt Correction. Please provide a copy of this Filing Receipt with the changes noted thereon. If you received a "Notice to File Missing Parts" for this application, please submit any corrections to this Filing Receipt with your reply to the Notice. When the USPTO processes the reply to the Notice, the USPTO will generate another Filing Receipt incorporating the requested corrections**

Inventor(s)

Robert Paul Morris, Raleigh, NC;

Applicant(s)

SITTING MAN, LLC, Raleigh, NC

Assignment For Published Patent Application

SITTING MAN, LLC, Raleigh, NC

Power of Attorney: The patent practitioners associated with Customer Number 92045

Domestic Priority data as claimed by applicant

This appln claims benefit of 62/137,173 03/23/2015
and is a CIP of 14/294,059 06/02/2014
which is a CON of 12/857,851 08/17/2010 PAT 8745418
This application 14/667,642
is a CIP of 13/941,502 07/14/2013
which is a CON of 12/789,550 05/28/2010 PAT 8577958
This application 14/667,642
is a CIP of 13/477,402 05/22/2012 ABN
which is a CON of 12/714,454 02/27/2010 PAT 8219606

Foreign Applications for which priority is claimed (You may be eligible to benefit from the **Patent Prosecution Highway** program at the USPTO. Please see http://www.uspto.gov for more information.) - None.
Foreign application information must be provided in an Application Data Sheet in order to constitute a claim to foreign priority. See 37 CFR 1.55 and 1.76.

If Required, Foreign Filing License Granted: 04/03/2015

The country code and number of your priority application, to be used for filing abroad under the Paris Convention, is **US 14/667,642**

Projected Publication Date: To Be Determined - pending completion of Missing Parts

Non-Publication Request: No

Early Publication Request: No
**** SMALL ENTITY ****
Title

METHODS, SYSTEMS, AND COMPUTER PROGRAM PRODUCTS FOR SELECTING A RESOURCE BASED ON A MEASURE OF A PROCESSING COST

Preliminary Class

709

Statement under 37 CFR 1.55 or 1.78 for AIA (First Inventor to File) Transition Applications: No

PROTECTING YOUR INVENTION OUTSIDE THE UNITED STATES

Since the rights granted by a U.S. patent extend only throughout the territory of the United States and have no effect in a foreign country, an inventor who wishes patent protection in another country must apply for a patent in a specific country or in regional patent offices. Applicants may wish to consider the filing of an international application under the Patent Cooperation Treaty (PCT). An international (PCT) application generally has the same effect as a regular national patent application in each PCT-member country. The PCT process **simplifies** the filing of patent applications on the same invention in member countries, but **does not result** in a grant of "an international patent" and does not eliminate the need of applicants to file additional documents and fees in countries where patent protection is desired.

Almost every country has its own patent law, and a person desiring a patent in a particular country must make an application for patent in that country in accordance with its particular laws. Since the laws of many countries differ in various respects from the patent law of the United States, applicants are advised to seek guidance from specific foreign countries to ensure that patent rights are not lost prematurely.

Applicants also are advised that in the case of inventions made in the United States, the Director of the USPTO must issue a license before applicants can apply for a patent in a foreign country. The filing of a U.S. patent application serves as a request for a foreign filing license. The application's filing receipt contains further information and guidance as to the status of applicant's license for foreign filing.

Applicants may wish to consult the USPTO booklet, "General Information Concerning Patents" (specifically, the section entitled "Treaties and Foreign Patents") for more information on timeframes and deadlines for filing foreign patent applications. The guide is available either by contacting the USPTO Contact Center at 800-786-9199, or it can be viewed on the USPTO website at http://www.uspto.gov/web/offices/pac/doc/general/index.html.

For information on preventing theft of your intellectual property (patents, trademarks and copyrights), you may wish to consult the U.S. Government website, http://www.stopfakes.gov. Part of a Department of Commerce initiative, this website includes self-help "toolkits" giving innovators guidance on how to protect intellectual property in specific countries such as China, Korea and Mexico. For questions regarding patent enforcement issues, applicants may call the U.S. Government hotline at 1-866-999-HALT (1-866-999-4258).

LICENSE FOR FOREIGN FILING UNDER

Title 35, United States Code, Section 184

Title 37, Code of Federal Regulations, 5.11 & 5.15

GRANTED

The applicant has been granted a license under 35 U.S.C. 184, if the phrase "IF REQUIRED, FOREIGN FILING LICENSE GRANTED" followed by a date appears on this form. Such licenses are issued in all applications where the conditions for issuance of a license have been met, regardless of whether or not a license may be required as set forth in 37 CFR 5.15. The scope and limitations of this license are set forth in 37 CFR 5.15(a) unless an earlier license has been issued under 37 CFR 5.15(b). The license is subject to revocation upon written notification. The date indicated is the effective date of the license, unless an earlier license of similar scope has been granted under 37 CFR 5.13 or 5.14.

This license is to be retained by the licensee and may be used at any time on or after the effective date thereof unless it is revoked. This license is automatically transferred to any related applications(s) filed under 37 CFR 1.53(d). This license is not retroactive.

The grant of a license does not in any way lessen the responsibility of a licensee for the security of the subject matter as imposed by any Government contract or the provisions of existing laws relating to espionage and the national security or the export of technical data. Licensees should apprise themselves of current regulations especially with respect to certain countries, of other agencies, particularly the Office of Defense Trade Controls, Department of State (with respect to Arms, Munitions and Implements of War (22 CFR 121-128)); the Bureau of Industry and Security, Department of Commerce (15 CFR parts 730-774); the Office of Foreign AssetsControl, Department of Treasury (31 CFR Parts 500+) and the Department of Energy.

NOT GRANTED

No license under 35 U.S.C. 184 has been granted at this time, if the phrase "IF REQUIRED, FOREIGN FILING LICENSE GRANTED" DOES NOT appear on this form. Applicant may still petition for a license under 37 CFR 5.12, if a license is desired before the expiration of 6 months from the filing date of the application. If 6 months has lapsed from the filing date of this application and the licensee has not received any indication of a secrecy order under 35 U.S.C. 181, the licensee may foreign file the application pursuant to 37 CFR 5.15(b).

SelectUSA

The United States represents the largest, most dynamic marketplace in the world and is an unparalleled location for business investment, innovation, and commercialization of new technologies. The U.S. offers tremendous resources and advantages for those who invest and manufacture goods here. Through SelectUSA, our nation works to promote and facilitate business investment. SelectUSA provides information assistance to the international investor community; serves as an ombudsman for existing and potential investors; advocates on behalf of U.S. cities, states, and regions competing for global investment; and counsels U.S. economic development organizations on investment attraction best practices. To learn more about why the United States is the best country in the world to develop technology, manufacture products, deliver services, and grow your business, visit http://www.SelectUSA.gov or call +1-202-482-6800.

PTO/AIA/82A (07-13)
Approved for use through 11/30/2014. OMB 0651-0051
U.S. Patent and Trademark Office; U.S. DEPARTMENT OF COMMERCE
Under the Paperwork Reduction Act of 1995, no persons are required to respond to a collection of information unless it displays a valid OMB control number.

TRANSMITTAL FOR POWER OF ATTORNEY TO ONE OR MORE REGISTERED PRACTITIONERS

NOTE: This form is to be submitted with the Power of Attorney by Applicant form (PTO/AIA/82B) to identify the application to which the Power of Attorney is directed, in accordance with 37 CFR 1.5, unless the application number and filing date are identified in the Power of Attorney by Applicant form. If neither form PTO/AIA/82A nor form PTO/AIA82B identifies the application to which the Power of Attorney is directed, the Power of Attorney will not be recognized in the application.

Application Number	
Filing Date	03-24-2015
First Named Inventor	Robert Paul Morris
Title	METHODS, SYSTEMS, AND COMPUTER PROGRAM PRODUCTS FOR SELECTING A RESOURCE BASED ON A MEASURE OF A PROCESSING COST
Art Unit	
Examiner Name	
Attorney Docket Number	PMOR0162B

SIGNATURE of Applicant or Patent Practitioner

Signature	/Patrick E. Caldwell/	Date (Optional)	
Name	Patrick E. Caldwell	Registration Number	44,580
Title (if Applicant is a juristic entity)			
Applicant Name (if Applicant is a juristic entity)			

NOTE: This form must be signed in accordance with 37 CFR 1.33. See 37 CFR 1.4(d) for signature requirements and certifications. If more than one applicant, use multiple forms.

☐ *Total of _____ forms are submitted.

This collection of information is required by 37 CFR 1.131, 1.32, and 1.33. The information is required to obtain or retain a benefit by the public which is to file (and by the USPTO to process) an application. Confidentiality is governed by 35 U.S.C. 122 and 37 CFR 1.11 and 1.14. This collection is estimated to take 3 minutes to complete, including gathering, preparing, and submitting the completed application form to the USPTO. Time will vary depending upon the individual case. Any comments on the amount of time you require to complete this form and/or suggestions for reducing this burden, should be sent to the Chief Information Officer, U.S. Patent and Trademark Office, U.S. Department of Commerce, P.O. Box 1450, Alexandria, VA 22313-1450. DO NOT SEND FEES OR COMPLETED FORMS TO THIS ADDRESS. **SEND TO: Commissioner for Patents, P.O. Box 1450, Alexandria, VA 22313-1450.**

If you need assistance in completing the form, call 1-800-PTO-9199 and select option 2.

PTO/AIA/82B (07-13)
Approved for use through 11/30/2014. OMB 0651-0051
U.S. Patent and Trademark Office; U.S. DEPARTMENT OF COMMERCE
Under the Paperwork Reduction Act of 1995, no persons are required to respond to a collection of information unless it displays a valid OMB control number

POWER OF ATTORNEY BY APPLICANT

I hereby revoke all previous powers of attorney given in the application identified in either the attached transmittal letter or the boxes below.

Application Number	Filing Date

(Note: The boxes above may be left blank if information is provided on form PTO/AIA/82A.)

☑ I hereby appoint the Patent Practitioner(s) associated with the following Customer Number as my/our attorney(s) or agent(s), and to transact all business in the United States Patent and Trademark Office connected therewith for the application referenced in the attached transmittal letter (form PTO/AIA/82A) or identified above: 92045

OR

☐ I hereby appoint Practitioner(s) named in the attached list (form PTO/AIA/82C) as my/our attorney(s) or agent(s), and to transact all business in the United States Patent and Trademark Office connected therewith for the patent application referenced in the attached transmittal letter (form PTO/AIA/82A) or identified above. (Note: Complete form PTO/AIA/82C.)

Please recognize or change the correspondence address for the application identified in the attached transmittal letter or the boxes above to:

☑ The address associated with the above-mentioned Customer Number

OR

☐ The address associated with Customer Number:

OR

Firm or Individual Name					
Address					
City		State		Zip	
Country					
Telephone		Email			

I am the Applicant (if the Applicant is a juristic entity, list the Applicant name in the box):

Sitting Man, LLC

☐ Inventor or Joint Inventor (title not required below)

☐ Legal Representative of a Deceased or Legally Incapacitated Inventor (title not required below)

☑ Assignee or Person to Whom the Inventor is Under an Obligation to Assign (provide signer's title if applicant is a juristic entity)

☐ Person Who Otherwise Shows Sufficient Proprietary Interest (e.g., a petition under 37 CFR 1.46(b)(2) was granted in the application or is concurrently being filed with this document) (provide signer's title if applicant is a juristic entity)

SIGNATURE of Applicant for Patent

The undersigned (whose title is supplied below) is authorized to act on behalf of the applicant (e.g., where the applicant is a juristic entity).

Signature	/Robert Paul Morris/	Date (Optional)	
Name	Robert Paul Morris		
Title	Managing Member		

NOTE: Signature - This form must be signed by the applicant in accordance with 37 CFR 1.33. See 37 CFR 1.4 for signature requirements and certifications. If more than one applicant, use multiple forms.

☐ Total of forms are submitted.

This collection of information is required by 37 CFR 1.131, 1.32, and 1.33. The information is required to obtain or retain a benefit by the public which is to file (and by the USPTO to process) an application. Confidentiality is governed by 35 U.S.C. 122 and 37 CFR 1.11 and 1.14. This collection is estimated to take 3 minutes to complete, including gathering, preparing, and submitting the completed application form to the USPTO. Time will vary depending upon the individual case. Any comments on the amount of time you require to complete this form and/or suggestions for reducing this burden, should be sent to the Chief Information Officer, U.S. Patent and Trademark Office, U.S. Department of Commerce, P.O. Box 1450, Alexandria, VA 22313-1450. DO NOT SEND FEES OR COMPLETED FORMS TO THIS ADDRESS. **SEND TO: Commissioner for Patents, P.O. Box 1450, Alexandria, VA 22313-1450.**

If you need assistance in completing the form, call 1-800-PTO-9199 and select option 2.

METHODS, SYSTEMS, AND COMPUTER PROGRAM PRODUCTS FOR SELECTING A RESOURCE BASED ON A MEASURE OF A PROCESSING COST

RELATED APPLICATIONS

[0001] This application claims the benefit of U.S. Provisional Patent Application No. 62/137,173 filed 3-23-2015 and is a continuation-in-part of, and claims priority to U.S. Patent Application No. 14/294,059, entitled "METHODS, SYSTEMS, AND COMPUTER PROGRAM PRODUCTS FOR SELECTING A RESOURCE BASED ON A MEASURE OF A PROCESSING COST," filed 06-02-2014 which in turn claims priority to U.S. Patent Application No. 12/857,851, entitled "METHODS, SYSTEMS, AND COMPUTER PROGRAM PRODUCTS FOR SELECTING A RESOURCE BASED ON A MEASURE OF A PROCESSING COST," filed 08-17-2010, which are each incorporated herein by reference in their entirety for all purposes.

[0002] Additionally, this application is a continuation-in-part of, and claims priority to U.S. Patent Application No. 13/941,502, entitled "METHODS, SYSTEMS, AND COMPUTER PROGRAM PRODUCTS FOR PROCESSING A NON-RETURNABLE COMMAND RESPONSE BASED ON A MARKUP ELEMENT," filed 07-14-2013 which in turn claims priority to U.S. Patent Application No. 12/789,550, entitled "METHODS, SYSTEMS, AND COMPUTER PROGRAM PRODUCTS FOR PROCESSING A NON-RETURNABLE COMMAND RESPONSE BASED ON A MARKUP ELEMENT," filed 05-

28-2010, which are each incorporated herein by reference in their entirety for all purposes.

[0003] Additionally, this application is a continuation-in-part of, and claims priority to U.S. Patent Application No. 13/477,402, entitled "METHODS, SYSTEMS, AND COMPUTER PROGRAM PRODUCTS FOR SHARING INFORMATION FOR DETECTING AN IDLE TCP CONNECTION," filed 05-22-2012 which in turn claims priority to U.S. Patent Application No. 12/714,454, entitled "METHODS, SYSTEMS, AND COMPUTER PROGRAM PRODUCTS FOR SHARING INFORMATION FOR DETECTING AN IDLE TCP CONNECTION," filed 02-27-2010, which are each incorporated herein by reference in their entirety for all purposes.

[0004] This application is related to the following which are each incorporated herein by reference in their entirety for all purposes: U.S. Patent Application No. 12/857,847, entitled "METHODS, SYSTEMS, AND PROGRAM PRODUCTS FOR PRESENTING AN INDICATION OF A COST OF PROCESSING A RESOURCE," filed 08-17-2010; U.S. Patent Application No. 12/857,857, entitled "METHODS, SYSTEMS, AND PROGRAM PRODUCTS FOR SELECTING A RESOURCE IN RESPONSE TO A CHANGE IN AVAILABLE ENERGY," filed on 08-17-2010; U.S. Patent Application No. 12/857,836, entitled "METHODS, SYSTEMS, AND PROGRAM PRODUCTS FOR MAINTAINING A RESOURCE BASED ON A COST OF ENERGY," filed 08-17-2010; U.S. Patent No. 8,346,853, entitled "METHODS, SYSTEMS, AND PROGRAM PRODUCTS FOR PROCESSING AN ATTACHED COMMAND RESPONSE," filed 05-

27-2010; U.S. Patent Application No. 12/788,373, entitled "METHODS, SYSTEMS, AND PROGRAM PRODUCTS FOR PREVENTING PROCESSING OF AN HTTP RESPONSE," filed 05-27-2010; U.S. Patent Application No. 12/789,538, entitled "METHODS, SYSTEMS, AND PROGRAM PRODUCTS FOR PROCESSING AN ATTACHED COMMAND RESPONSE BASED ON A MARKUP ELEMENT," filed 05-28-2010; U.S. Patent Application No. 12/788,381, entitled "METHODS, SYSTEMS, AND PROGRAM PRODUCTS FOR PROCESSING A COMBINED COMMAND RESPONSE," filed 05-27-2010; U.S. Patent Application No. 12/789,568, entitled "METHODS, SYSTEMS, AND PROGRAM PRODUCTS FOR PROCESSING A COMBINED COMMAND RESPONSE BASED ON A MARKUP ELEMENT," filed 05-28-2010; and U.S. Patent Application No. 12/714,063, entitled "METHODS, SYSTEMS, AND PROGRAM PRODUCTS FOR DETECTING AN IDLE TCP CONNECTION," filed on 02-26-2010.

BACKGROUND

[0005] Many personalization options on computing devices consume energy not required to perform computing tasks. For example, a primary purpose of a desktop background is esthetic. Mouse pointer effects, window effects, document previews, and many other examples exist. Currently, a user can configure a device to automatically turn such features on or off based on whether the device is plugged into an electrical

outlet or drawing energy from a battery. Other features, such as the brightness of a display, can be adjusted based on whether a device is plugged in or not. These configuration options give no consideration to resources being processed by the corresponding features.

[0006] Accordingly, there exists a need for methods, systems, and computer program products for selecting a resource based on a measure of a processing cost.

SUMMARY

[0007] The following presents a simplified summary of the disclosure in order to provide a basic understanding to the reader. This summary is not an extensive overview of the disclosure and it does not identify key/critical elements of the invention or delineate the scope of the invention. Its sole purpose is to present some concepts disclosed herein in a simplified form as a prelude to the more detailed description that is presented later.

[0008] Methods and systems are described for selecting a resource based on a measure of a processing cost. In one aspect, the method includes receiving resource information identifying a first resource and a second resource for processing by a program component. The method further includes determining at least one of a first measure of a specified processing cost for the processing of the first resource and a second measure of the processing cost for the processing of the second resource. The method still further includes selecting one of the first resource and the second resource based on the at least one of the first measure and the second measure. The method still

further includes identifying, to the program component, the selected one of the first resource and the second resource for processing.

[0009] Further, a system for selecting a resource based on a measure of a processing cost is described. The system includes a cost advisor component, a cost monitor component, a cost director component, and a cost operations component adapted for operation in an execution environment. The system includes the cost advisor component configured for receiving resource information identifying a first resource and a second resource for processing by a program component. The system further includes the cost monitor component configured for determining at least one of a first measure of a specified processing cost for the processing of the first resource and a second measure of the processing cost for the processing of the second resource. The system still further includes the cost director component configured for selecting one of the first resource and the second resource based on the at least one of the first measure and the second measure. The system still further includes the cost operations component configured for identifying, to the program component, the selected one of the first resource and the second resource for processing.

BRIEF DESCRIPTION OF THE DRAWINGS

[0010] Objects and advantages of the present invention will become apparent to those skilled in the art upon reading this description in conjunction with the accompanying drawings, in which like reference numerals have been used to designate like or analogous elements, and in which:

[0011] Fig. 1 is a block diagram illustrating an exemplary hardware device included in and/or otherwise providing an execution environment in which the subject matter may be implemented;

[0012] Fig. 2 is a flow diagram illustrating a method for selecting a resource based on a measure of a processing cost according to an aspect of the subject matter described herein;

[0013] Fig. 3 is a block diagram illustrating an arrangement of components for selecting a resource based on a measure of a processing cost according to another aspect of the subject matter described herein;

[0014] Fig. 4a is a block diagram illustrating an arrangement of components for selecting a resource based on a measure of a processing cost according to another aspect of the subject matter described herein;

[0015] Fig. 4b is a block diagram illustrating an arrangement of components for selecting a resource based on a measure of a processing cost according to another aspect of the subject matter described herein;

[0016] Fig. 4c is a block diagram illustrating an arrangement of components for selecting a resource based on a measure of a processing cost according to another aspect of the subject matter described herein;

[0017] Fig. 4d is a block diagram illustrating an arrangement of components for selecting a resource based on a measure of a processing cost according to another aspect of the subject matter described herein;

[0018] Fig. 5 is a network diagram illustrating an exemplary system for selecting a resource based on a measure of a processing cost according to another aspect of the subject matter described herein; and

[0019] Fig. 6 is a diagram illustrating a user interface presented via a display according to another aspect of the subject matter described herein.

DETAILED DESCRIPTION

[0020] One or more aspects of the disclosure are described with reference to the drawings, wherein like reference numerals are generally utilized to refer to like elements throughout, and wherein the various structures are not necessarily drawn to scale. In the following description, for purposes of explanation, numerous specific details are set forth in order to provide a thorough understanding of one or more aspects of the disclosure. It may be evident, however, to one skilled in the art, that one or more aspects of the disclosure may be practiced with a lesser degree of these specific details. In other instances, well-known structures and devices are shown in block diagram form in order to facilitate describing one or more aspects of the disclosure.

[0021] An exemplary device included in an execution environment that may be configured according to the subject matter is illustrated in Fig. 1. An execution environment includes an arrangement of hardware and, optionally, software that may be further configured to include an arrangement of components for performing a method of the subject matter described herein. An execution environment includes and/or is otherwise provided by one or more devices. An execution environment may include a

virtual execution environment including software components operating in a host execution environment. Exemplary devices included in or otherwise providing suitable execution environments for configuring according to the subject matter include personal computers, notebook computers, tablet computers, servers, handheld and other mobile devices, multiprocessor devices, distributed devices, consumer electronic devices, routers, communication servers, and/or other network-enabled devices. Those skilled in the art will understand that the components illustrated in Fig. 1 are exemplary and may vary by particular execution environment.

[0022] Fig. 1 illustrates hardware device **100** included in execution environment **102**. Fig. 1 illustrates that execution environment **102** includes instruction-processing unit (IPU) **104**, such as one or more microprocessors; physical IPU memory **106** including storage locations identified by addresses in a physical memory address space of IPU **104;** persistent secondary storage **108**, such as one or more hard drives and/or flash storage media; input device adapter **110**, such as a key or keypad hardware, a keyboard adapter, and/or a mouse adapter; output device adapter **112**, such as a display and/or an audio adapter for presenting information to a user; a network interface component, illustrated by network interface adapter **114,** for communicating via a network such as a LAN and/or WAN; and a communication mechanism that couples elements **104-114**, illustrated as bus **116**. Elements **104-114** may be operatively coupled by various means. Bus **116** may comprise any type of bus architecture, including a memory bus, a peripheral bus, a local bus, and/or a switching fabric.

[0023] IPU **104** is an instruction execution machine, apparatus, or device. Exemplary IPUs include one or more microprocessors, digital signal processors (DSPs), graphics processing units, application-specific integrated circuits (ASICs), and/or field programmable gate arrays (FPGAs). In the description of the subject matter herein, the terms “IPU” and “processor” are used interchangeably. IPU **104** may access machine code instructions and data via one or more memory address spaces in addition to the physical memory address space. A memory address space includes addresses identifying locations in a processor memory. The addresses in a memory address space are included in defining a processor memory. IPU **104** may have more than one processor memory. Thus, IPU **104** may have more than one memory address space. IPU **104** may access a location in a processor memory by processing an address identifying the location. The processed address may be in an operand of a machine code instruction and/or may be identified in a register or other portion of IPU **104**.

[0024] Fig. 1 illustrates virtual IPU memory **118** spanning at least part of physical IPU memory **106** and at least part of persistent secondary storage **108**. Virtual memory addresses in a memory address space may be mapped to physical memory addresses identifying locations in physical IPU memory **106**. An address space for identifying locations in a virtual processor memory is referred to as a virtual memory address space; its addresses are referred to as virtual memory addresses; and its IPU memory is referred to as a virtual IPU memory or virtual memory. The terms “IPU memory” and “processor memory” are used interchangeably herein. Processor memory may refer to physical processor memory, such as IPU memory **106,** and/or may refer to virtual

processor memory, such as virtual IPU memory **118**, depending on the context in which the term is used.

[0025] Physical IPU memory **106** may include various types of memory technologies. Exemplary memory technologies include static random access memory (SRAM) and/or dynamic RAM (DRAM) including variants such as dual data rate synchronous DRAM (DDR SDRAM), error correcting code synchronous DRAM (ECC SDRAM), and/or RAMBUS DRAM (RDRAM). Physical IPU memory **106** may include volatile memory as illustrated in the previous sentence and/or may include nonvolatile memory such as nonvolatile flash RAM (NVRAM) and/or ROM.

[0026] Persistent secondary storage **108** may include one or more flash memory storage devices, one or more hard disk drives, one or more magnetic disk drives, and/or one or more optical disk drives. Persistent secondary storage may include removable media. The drives and their associated computer readable storage media provide volatile and/or nonvolatile storage for computer readable instructions, data structures, program components, and other data for execution environment **102**.

[0027] Execution environment **102** may include software components stored in persistent secondary storage **108**, in remote storage accessible via a network, and/or in a processor memory. Fig. 1 illustrates execution environment **102** including operating system **120**, one or more applications **122**, and other program code and/or data components illustrated by other libraries and subsystems **124**. In an aspect, some or all software components may be stored in locations accessible to IPU **104** in a shared memory address space shared by the software components. The software components

accessed via the shared memory address space are stored in a shared processor memory defined by the shared memory address space. In another aspect, a first software component may be stored in one or more locations accessed by IPU **104** in a first address space and a second software component may be stored in one or more locations accessed by IPU **104** in a second address space. The first software component is stored in a first processor memory defined by the first address space and the second software component is stored in a second processor memory defined by the second address space.

[0028] Software components typically include instructions executed by IPU **104** in a computing context referred to as a "process". A process may include one or more "threads". A "thread" includes a sequence of instructions executed by IPU **104** in a computing sub-context of a process. The terms "thread" and "process" may be used interchangeably herein when a process includes only one thread.

[0029] Execution environment **102** may receive user-provided information via one or more input devices illustrated by input device **128**. Input device **128** provides input information to other components in execution environment **102** via input device adapter **110**. Execution environment **102** may include an input device adapter for a keyboard, a touch screen, a microphone, a joystick, a television receiver, a video camera, a still camera, a document scanner, a fax, a phone, a modem, a network interface adapter, and/or a pointing device, to name a few exemplary input devices.

[0030] Input device **128** included in execution environment **102** may be included in device **100** as Fig. 1 illustrates or may be external (not shown) to device **100**. Execution

environment **102** may include one or more internal and/or external input devices. External input devices may be connected to device **100** via corresponding communication interfaces such as a serial port, a parallel port, and/or a universal serial bus (USB) port. Input device adapter **110** receives input and provides a representation to bus **116** to be received by IPU **104**, physical IPU memory **106**, and/or other components included in execution environment **102**.

[0031] Output device **130** in Fig. 1 exemplifies one or more output devices that may be included in and/or may be external to and operatively coupled to device **100**. For example, output device **130** is illustrated connected to bus **116** via output device adapter **112**. Output device **130** may be a display device. Exemplary display devices include liquid crystal displays (LCDs), light emitting diode (LED) displays, and projectors. Output device **130** presents output of execution environment **102** to one or more users. In some embodiments, an input device may also include an output device. Examples include a phone, a joystick, and/or a touch screen. In addition to various types of display devices, exemplary output devices include printers, speakers, tactile output devices such as motion producing devices, and other output devices producing sensory information detectable by a user.

[0032] A device included in or otherwise providing an execution environment may operate in a networked environment communicating with one or more devices via one or more network interface components. The terms “communication interface component” and “network interface component” are used interchangeably. Fig. 1 illustrates network interface adapter (NIA) **114** as a network interface component

included in execution environment **102** to operatively couple device **100** to a network. A network interface component includes a network interface hardware (NIH) component and optionally a software component.

[0033] Exemplary network interface components include network interface controller components, network interface cards, network interface adapters, and line cards. A node may include one or more network interface components to interoperate with a wired network and/or a wireless network. Exemplary wireless networks include a BLUETOOTH network, a wireless 802.11 network, and/or a wireless telephony network (e.g., a cellular, PCS, CDMA, and/or GSM network). Exemplary network interface components for wired networks include Ethernet adapters, Token-ring adapters, FDDI adapters, asynchronous transfer mode (ATM) adapters, and modems of various types. Exemplary wired and/or wireless networks include various types of LANs, WANs, and/or personal area networks (PANs). Exemplary networks also include intranets and internets such as the Internet.

[0034] The terms “network node” and “node” in this document both refer to a device having a network interface component for operatively coupling the device to a network. Further, the terms “device” and “node” used herein refer to one or more devices and nodes, respectively, providing and/or otherwise included in an execution environment unless clearly indicated otherwise.

[0035] The components of a user interface are generically referred to herein as “user interface elements”. More specifically, visual components of a user interface are referred to herein as “visual interface elements”. A visual interface element may be a

visual component of a graphical user interface (GUI). Exemplary visual interface elements include windows, textboxes, sliders, list boxes, drop-down lists, spinners, various types of menus, toolbars, ribbons, combo boxes, tree views, grid views, navigation tabs, scrollbars, labels, tooltips, text in various fonts, balloons, dialog boxes, and various types of button controls including check boxes and radio buttons. An application interface may include one or more of the elements listed. Those skilled in the art will understand that this list is not exhaustive. The terms “visual representation”, “visual component”, and “visual interface element” are used interchangeably in this document. Other types of user interface elements include audio output components referred to as ”audio interface elements”, tactile output components referred to as “tactile interface elements”, and the like.

[0036] A “user interface (UI) element handler” component, as the term is used in this document, includes a component configured to send information representing a program entity for presenting a user detectable representation of the program entity by an output device, such as a display. A “program entity” is an object included in and/or otherwise processed by an application or executable. The user detectable representation is presented based on the sent information. The sent information is referred to herein as “presentation information”. Presentation information may include data in one or more formats. Exemplary formats include image formats such as JPEG, video formats such as MP4, markup language data such as HTML and other XML-based markup, and/or instructions such as those defined by various script languages, byte code, and/or machine code. For example, a web page received by a browser from

a remote application provider may include HTML, ECMAScript, and/or byte code for presenting one or more user interface elements included in a user interface of the remote application. Components configured to send information representing one or more program entities for presenting particular types of output by particular types of output devices include visual interface elements, audio interface element handler components, tactile interface element handler components, and the like.

[0037] A representation of a program entity may be stored and/or otherwise maintained in a presentation space. As used in this document, the term “presentation space” refers to a storage region allocated and/or otherwise provided for storing presentation information, which may include audio, visual, tactile, and/or other sensory data for presentation by and/or on an output device. For example, a buffer for storing an image and/or text string may be a presentation space. A presentation space may be physically and/or logically contiguous or non-contiguous. A presentation space may have a virtual as well as a physical representation. A presentation space may include a storage location in processor memory, secondary storage, a memory of an output adapter device, and/or a storage medium of an output device. A screen of a display, for example, is a presentation space.

[0038] As used herein, the term "program" or "executable" refers to any data representation that may be translated into a set of machine code instructions and optionally associated program data. Thus, a program or executable may include an application, a shared or non-shared library, and a system command. Program representations other than machine code include object code, byte code, and source

code. Object code includes a set of instructions and/or data elements that either are prepared for linking prior to loading or are loaded into an execution environment. When in an execution environment, object code may include references resolved by a linker and/or may include one or more unresolved references. The context in which this term is used will make clear that state of the object code when it is relevant. This definition can include machine code and virtual machine code, such as Java™ byte code.

[0039] As used herein, an "addressable entity" is a portion of a program, specifiable in programming language in source code. An addressable entity is addressable in a program component translated for a compatible execution environment from the source code. Examples of addressable entities include variables, constants, functions, subroutines, procedures, modules, methods, classes, objects, code blocks, and labeled instructions. A code block includes one or more instructions in a given scope specified in a programming language. An addressable entity may include a value. In some places in this document "addressable entity" refers to a value of an addressable entity. In these cases, the context will clearly indicate that the value is being referenced.

[0040] Addressable entities may be written in and/or translated to a number of different programming languages and/or representation languages, respectively. An addressable entity may be specified in and/or translated into source code, object code, machine code, byte code, and/or any intermediate languages for processing by an interpreter, compiler, linker, loader, or analogous tool.

[0041] The block diagram in Fig. 3 illustrates an exemplary system for selecting a resource based on a measure of a processing cost according to the method illustrated

in Fig. 2. Fig. 3 illustrates a system, adapted for operation in an execution environment, such as execution environment **102** in Fig. 1, for performing the method illustrated in Fig. 2. The system illustrated includes a cost advisor component **302**, a cost monitor component **304**, a cost director component **306**, and a cost operations component **308**. The execution environment includes an instruction-processing unit, such as IPU **104**, for processing an instruction in at least one of the cost advisor component **302**, the cost monitor component **304**, the cost director component **306**, and the cost operations component **308**. Some or all of the exemplary components illustrated in Fig. 3 may be adapted for performing the method illustrated in Fig. 2 in a number of execution environments. Figs. 4a-d include block diagrams illustrating the components of Fig. 3 and/or analogs of the components of Fig. 3 adapted for operation in various execution environments **401** including or otherwise provided by one or more nodes.

[0042] Fig. 1 illustrates components of an exemplary device that may at least partially provide and/or otherwise be included in an execution environment. The components illustrated in Figs. 4a-d may be included in or otherwise combined with the components of Fig. 1 to create a variety of arrangements of components according to the subject matter described herein.

[0043] Fig. 5 illustrates user node **502** as an exemplary device that in various aspects may be included in and/or otherwise adapted for providing any of execution environments **401** illustrated in Figs. 4a-c each illustrating a different adaptation of the arrangement of components in Fig. 3. As illustrated in Fig. 5, user node **502** is operatively coupled to network **504** via a network interface component, such as network

interface adapter **114.** Alternatively or additionally, an adaptation of an execution environment **401** may include and/or may otherwise be provided by a device that is not operatively coupled to a network. A server device is illustrated by application provider node **506**. Application provider node **506** may be included in and/or otherwise adapted for providing execution environment **401d** illustrated in Fig. 4d. As illustrated in Fig. 5, application provider node **506** is operatively coupled to network **504** via a network interface component included in execution environment **401d**.

[0044] Fig. 4a illustrates execution environment **401a** hosting application **403a** including an adaptation of the arrangement of components in Fig. 3. Fig. 4b illustrates execution environment **401b** hosting browser **403b** including an adaptation of the arrangement of components in Fig. 3 that may operate at least partially in a network application agent **405b** received from a remote application provider, such as network application **403d** in Fig. 4d. Browser **403b** and execution environment **401b** may provide at least part of an execution environment for network application agent **405b** that may be received via a network from a network application operating in a remote execution environment. Fig. 4c illustrates an arrangement of the components in Fig. 3 adapted to operate in a cost management subsystem **407c** of execution environment **401c**. The arrangement in Fig. 4c may mediate communication between applications **403c** and one or more output devices, such as output device **130** in Fig 1.

[0045] Fig. 4d illustrates execution environment **401d** configured to host one or more network applications, such as a web service, illustrated by network application **403d**. Fig. 4d also illustrates network application platform **409d** that may provide services to

one or more network applications. Network application **403d** includes yet another adaptation of the arrangement of components in Fig. 3.

[0046] The various adaptations of the arrangement in Fig. 3 that are described herein are not exhaustive. For example, those skilled in the art will see based on the description herein that arrangements of components for performing the method illustrated in Fig. 2 may be at least partially included in an application and at least partially external to the application. Further, arrangements for performing the method illustrated in Fig. 2 may be distributed across more than one node and/or execution environment. For example, such an arrangement may operate at least partially in browser **403b** in Fig. 4b and at least partially in execution environment **401d** in and/or external to network application **403d**.

[0047] Figs. 4a-d illustrate adaptations of network stacks **411** configured for sending and receiving messages over a network, such as network **504**, via a network interface component. Network application platform **409d** in Fig. 4d provides services to one or more network applications. In various aspects, network application platform **409d** may include and/or interoperate with a web server. Fig. 4d also illustrates network application platform **409d** configured for interoperating with network stack **411d**.

[0048] Network stacks **411** may support the same protocol suite, such as TCP/IP, or may communicate via a network gateway or other protocol translation device and/or service. For example, browser **403b** in Fig. 4b and network application platform **409d** in Fig. 4d may interoperate via their respective network stacks: network stack **411b** and network stack **411d**.

[0049] Figs. 4a-d illustrate applications **403**, respectively, which may communicate via one or more application layer protocols. Figs. 4a-d respectively illustrate application protocol components **413** for communicating via one or more application layer protocols. Exemplary application protocols include hypertext transfer protocol (HTTP) and instant messaging and presence (XMPP-IM) protocol. Matching protocols enabling applications **403** to communicate via network **504** in Fig. 5 are not required, if communication is via a protocol gateway or other translator.

[0050] In Fig. 4b, browser **403b** may receive some or all of network application agent **405b** in one or more messages sent from a network application, such as network application **403d** via network application platform **409d**, a network stack **411**, a network interface component, and optionally an application protocol component **413**. In Fig. 4b, browser **403b** includes content manager component **415b**. Content manager component **415b** may interoperate with one or more of application protocol components **413b** and/or network stack **411b** to receive the message or messages including some or all of network application agent **405b**.

[0051] Network application agent **405b** may include a web page for presenting a user interface for network application **403d**. The web page may include and/or reference data represented in one or more formats including hypertext markup language (HTML) and/or other markup language, ECMAScript or other scripting language, byte code, image data, audio data, and/or machine code.

[0052] In an example, in response to a request received from browser **403b**, controller component **417d**, in Fig. 4d, may invoke model subsystem **419d** to perform request-

specific processing. Model subsystem **419d** may include any number of request handlers (not shown) for dynamically generating data and/or retrieving data from model database **421d** based on the request. Controller component **417d** may further invoke template engine **423d** to identify one or more templates and/or static data elements for generating a user interface for representing a response to the received request. Fig. 4d illustrates template database **425d** including exemplary template **427d**. Fig. 4d illustrates template engine **423d** as a component in view subsystem **429d** configured to return responses to processed requests in a presentation format suitable for a client, such as browser **403b**. View subsystem **429d** may provide the presentation data to controller component **417d** to send to browser **403b** in response to the request received from browser **403b**. Some or all of network application agent **405b** may be sent to browser **403b** via network application platform **409d** as described above.

[0053] While the example describes sending some or all of network application agent **405b** in response to a request, network application **403d** additionally or alternatively may send some or all of a network application agent to browser **403b** via one or more asynchronous messages. In an aspect, an asynchronous message may be sent in response to a change detected by network application **403d**. Publish-subscribe protocols, such as the presence protocol specified by XMPP-IM, are exemplary protocols for sending messages asynchronously.

[0054] The one or more messages including information representing some or all of network application agent **405b** in Fig. 4b may be received by content manager component **415b** via one or more of application protocol component(s) **413b** and

network stack **411b** as described above. In Fig. 4b, browser **403b** includes one or more content handler components **431b** to process received data according to its data type, typically identified by a MIME-type identifier. Exemplary content handler components **431b** include a text/html content handler component for processing HTML documents; an application/xmpp-xml content handler component for processing XMPP streams including presence tuples, instant messages, and publish-subscribe data as defined by various XMPP specifications; one or more video content handler components for processing video streams of various types; and still image data content handler components for processing various images types. Content handler components **431b** process received data and may provide a representation of the processed data to one or more user interface (UI) element handler components **433b**.

[0055] UI element handler components **433** are respectively illustrated in presentation controller components **435** in Fig. 4a, Fig. 4b, and Fig. 4c. A presentation controller component **435** may manage visual, audio, and/or other types of output of its including application **403** as well as receive and route detected user and other inputs to components and extensions of its including application **403**. With respect to Fig. 4b, a UI element handler component **433b** in various aspects may be adapted to operate at least partially in a content handler component **431b** such as a text/html content handler component and/or a script content handler component. Additionally or alternatively, a UI element handler component **433** in an execution environment **401** may operate in and/or as an extension of its including application **403**. For example, a plug-in may provide a virtual machine, for a UI element handler component received as a script

and/or byte code, that may operate as an extension in application **403** and/or external to and interoperating with application **403**.

[0056] Fig. 6 illustrates display presentation space **602** of a display in and/or operatively coupled to user node **502**. Fig. 6 illustrates desktop background **604** that may be a still image and/or a video background. Selection window **606** is illustrated including selectable resource icons **608**. In an aspect, a resource icon may represent image and/or video data. Resource icon **6082b** is illustrated as selected. A selected image file and/or video stream that corresponds to a selected resource icon **608** may be processed in response to user input corresponding to operations illustrated in operation bar **610**. Selection window **606** may be a user interface presented by any of applications **403** illustrated in Figs. 4a-d and/or by network application agent **405b**. For example, selection window **606** may be presented via interoperation of browser **403b**, network application agent **405b**, and/or network application **403d**. A browser window may include a user interface of a network application provided by a remote node, such as a network application **403d** in Fig. 4d.

[0057] Various UI elements of applications **403** described above may be presented by one or more UI element handler components **433** in Figs. 4a-c and/or by one or more template engines **423d** in Fig. 4d. In an aspect, illustrated in Figs. 4a-4c, UI element handler component(s) **433** of one or more applications **403** is/are configured to send representation information representing a visual interface element, such as operation bar **610** in Fig. 6, to a GUI subsystem **437**. A GUI subsystem **437** may instruct a graphics subsystem **439** to draw the visual interface element in a region of display

presentation space **602**, based on presentation information received from a corresponding UI element handler component **433**.

[0058] Input may be received corresponding to a UI element via an input driver **441** illustrated in Figs. 4a-c in various adaptations. For example, a user may move a mouse to move a pointer presented in a display presentation space **602** over an operation user interface element presented in an operation bar **610**. A user may provide an input detected by the mouse. The detected input may be received by a GUI subsystem **437** via an input driver **441** as an operation or command indicator based on the association of the shared location of the pointer and the operation user interface element in display presentation space **602**.

[0059] With reference to Fig. 2, block **202** illustrates that the method includes receiving resource information identifying a first resource and a second resource for processing by a program component. Accordingly, a system for selecting a resource based on a measure of a processing cost includes means for receiving resource information identifying a first resource and a second resource for processing by a program component. For example, as illustrated in Fig. 3, cost advisor component **302** is configured for receiving resource information identifying a first resource and a second resource for processing by a program component. Figs. 4a-d illustrate cost advisor components **402** as adaptations and/or analogs of cost advisor component **302** in Fig. 3. One or more cost advisor components **402** operate an in execution environment **401**.

[0060] In Fig. 4a, cost advisor component **402a** is illustrated as a component of application **403a**. In Fig. 4b, cost advisor component **402b** is illustrated as component of

network application agent **405b** and/or browser **403b**. In Fig. 4c, cost advisor component **402c** is illustrated operating external to one or more applications **403c**. Execution environment **401c** includes cost advisor component **402c** in cost management subsystem **407c**. In Fig. 4d, cost advisor component **402d** is illustrated operating in network application **403d** remote from a display device for presenting received information for updating a visual component. For example, cost advisor component **402d** may operate in remote application provider node **506** while the received information is to be sent to a display device of user node **502** via network **504**.

[0061] Receiving resource information identifying a resource may include receiving an indication to present a representation of the resource to a user via an output device, receiving an indication identifying the resource as an input to a program component in an execution environment for performing an operation that includes processing the resource, detecting an access to the resource for the processing by a program component, detecting an input corresponding to a user interface element including a representation of the resource, sending information to present a representation of the resource to a user via an output device, and/or intercepting a communication for accessing the resource. In response to one or more of these and/or analogous events, a cost advisor component **402** in Fig. 4a-d may receive resource information identifying a resource.

[0062] In an aspect, resource information identifying a second resource may be received. In response to receiving the resource information the first resource may be identified. The second resource may be identified as an alternative to processing the

first resource or as an additional resource to process along with the first resource based on a measure of a processing cost determined for one or both resources.

[0063] Figs. 4a-c illustrate that a cost advisor **402** may interoperate with a user interface component, such as a user interface element handler component **433**. The user interface component may present a representation of a resource for selecting by a user as an input to a program component for performing an operation. For example, a selectable representation of a resource may be presented in an explorer or navigation window, a list box, a spinner, a text input box, a file selection dialog, and/or any other user interface component for selecting an item by a user. The presentation may be via audio output with selection via a voice input device and/or other input device(s). Resource icons **608** in Fig 6 presented, based on received resource information, may illustrate selectable representations of one or more resources. Exemplary resources for processing by a program component include some or all of a data file, an executable file, a database record, a network message, input data, output data, a document, a media stream, a digital image, a communication communicated between at least two communicants, and/or a log.

[0064] In an aspect, a resource icon **608** in Fig. 6 may represent an image and/or a video to be processed by a program component, such as application **403a** in Fig. 4a, for presenting as a background of a display region, such as a desktop or an application background. Cost advisor component **402a** may present a file navigation user interface to receive resource information identifying one or more images and/or videos for processing by an IPU and/or other hardware component(s) included in execution

environment **401a** as an input to application **403a** for performing the operation of presenting a desktop background.

[0065] In Fig. 4c, GUI subsystem **437c** may receive resource information identifying an image and/or video to present in display presentation space **602** as desktop background **604**. GUI subsystem **437c** may interoperate with cost advisor component **402b** to communicate resource information identifying a resource.

[0066] Network application agent **405b** in Fig. 4b and/or network application **403d** in Fig. 4d may receive resource information for presenting and/or otherwise processing by network application agent **405b** and/or browser **403b**. For example, cost advisor component **402b** may be provided with resource information and/or cost advisor component **402d** may be provided with resource information. Cost advisor component **402b** and cost advisor component **402d** may interoperate in an aspect. In another aspect, cost advisor component **402b** and cost advisor component **402d** may operate independently. In still another aspect, one or the other of cost advisor component **402b** and cost advisor component **402d** may not be included in an adapation of one or the other of execution environment **401b** and execution environment **401d**.

[0067] In various aspects and adaptations of cost advisor **302** in Fig. 3, such as cost advisors **402** in Figs. 4a-d, a cost advisor may be included in accessing and/or otherwise managing a resource. The cost advisor may receive resource information in response to an access to the resource. Resource information may be received through an invocation of a cost advisor **402** as a function, method, subroutine, and the like. The resource information may be received via a notification associated with a subscription to

events associated with the resource and/or a program component for processing the resource. The resource information may be received via an interprocess communication mechanism (IPC) such as a message queue, a pipe, a software interrupt, and/or a hardware interrupt. The resource information may be received via a message received via a network.

[0068] Alternatively or additionally, resource information may be received in response to identifying a program component. A program component may process resources having a particular attribute, such as file type and/or content type. For example, application **403a** in Fig. 4a may include a media player component to process files having file types and/or having content type identifiers that identify the media files including audio data, image data, and associated metadata. Resource information for one or more resources that match attribute information that identifies the resources as inputs for processing by a program component, may be received by cost advisor component **402a** in response to receiving information identifying the media player component (not shown).

[0069] A second resource may be identified based on the first resource. In one aspect, a program component may process resources having a particular attribute, such as file type and/or content type. For example, a drawing program component may process files having file types and/or content type identifiers that identify the files that are computer drawn and/or editable via drawing. Resource information for one or more resources that match attribute information for an identified first resource may be received, in response to and/or otherwise based on identifying the first resource for processing and/or during

processing by a program component. For example, in Fig. 4c application **403c1** may be a graphics editing application. Application **403c1** may access a first resource having a file type and/or other content type identifier indicating that it includes editable graphics content. Cost advisor **402c** may receive information identifying one or more other resources including editable graphics content in response to application **403c1** accessing the first resource.

[0070] Returning to Fig. 2, block **204** illustrates that the method further includes determining at least one of a first measure of a specified processing cost for the processing of the first resource and a second measure of the processing cost for the processing of the second resource. Accordingly, a system for selecting a resource based on a measure of a processing cost includes means for determining at least one of a first measure of a specified processing cost for the processing of the first resource and a second measure of the processing cost for the processing of the second resource. For example, as illustrated in Fig. 3, cost monitor component **304** is configured for determining at least one of a first measure of a specified processing cost for the processing of the first resource and a second measure of the processing cost for the processing of the second resource. Figs. 4a-d illustrate cost monitor components **404** as adaptations and/or analogs of cost monitor component **304** in Fig. 3. One or more cost monitor components **404** operate in an execution environment **401**.

[0071] A metric defines a unit of measure. For example, an “inch” is a unit of measure for measuring length. A “kilowatt-hour” (kWh) is a unit of measurement in a metric for measuring an amount of energy. Instead of or in addition to measuring an amount a

metric may measure a rate. “Kilowatts per hour” (kWh/h) is energy or power metric for measuring a rate of energy used. A “measure” is a result of a particular measuring or measurement process. For example, 3 inches is a measure according to the length metric for inches, and 1000 kWh is a measure of an energy metric identifying an amount of energy. As used herein, a “measure of a processing cost” refers to a result of a measuring process for determining a processing cost according to a specified metric. Measuring may include estimating a measurement.

[0072] A processing cost may be determined and/or expressed by any metric, directly and/or indirectly providing an indication of a processing cost associated with processing a resource in performing a specified operation. A metric for determining a processing cost in terms of electrical power may be determined by monitoring a rate of electrical energy utilized over time period by a hardware component that is included in processing a resource. For example, a flow of electricity to a network interface adapter may be monitored, for resources where processing the resources includes sending and/or receiving data via a network. Some of the data may be included in the resources. The metric may represent the cost, for example, in kilowatt-hours, in kilowatts per hour, in transmission time, in bandwidth utilization, in latency, and/or in monetary units. In Figs. 4a-d, cost monitor component **404** may be invoked to determine and/or otherwise identify a measure of a processing cost for processing a particular resource in performing an operation.

[0073] A metric may be specified for measuring and/or expressing a processing cost in a less direct manner. For example, with respect to energy cost, an energy cost may be

measured by counting occurrences of an energy consuming activity, such as a disk read. From another perspective a metric based on disk reads may be a direct measure of a utilization cost resulting from processing one or more resources stored in a hard-drive.

[0074] Exemplary metrics for measuring processing cost include metrics for energy, monetary metrics, time metrics, kinetic or stored energy metrics, heat metrics, metrics for resistance including mechanical and/or electrical resistance, metrics for measuring various energy and/or power consuming activities, metrics for measuring an environmental cost, health metrics, safety metrics, light metrics, metrics for measuring movement, metrics for measuring mass and/or weight, and/or metrics for measuring an opportunity cost.

[0075] A particular metric for determining a measure of a processing cost for a resource may be selected and/or otherwise identified based on one or more attributes of a resource, an operation that includes processing the resource, a program component for performing some or all of the operation, a hardware component included in processing the resource, a user, an organization, and/or a task; to name a few examples. For example, a metric such as a count of machine code instructions executed by an IPU may be specified and/or determined in performing a specified operation. An IPU based metric may be selected for measuring a cost of processing a resource where no output device is included in processing the resource. For an application or process that presents a user interface via a display component, a metric for measuring heat and/or light generated by the display device may be specified.

[0076] A cost monitor component **404**, in an aspect, may determine a measure of a processing cost based on metadata provided in and/or with one or more of a resource, a program component for performing an operation that includes processing the resource, and a hardware component included in performing an operation that includes processing the resource. A measure of a processing cost may be predetermined and located by cost monitor component **404** in and/or associated with a resource, a program component, and/or a hardware component. Cost monitor component **404** may access a table and/or other structure including predefined values for measures of the processing cost for a particular metric such as a change in temperature of a hardware component in Celsius and/or a time based cost represented in US dollars.

[0077] A cost monitor component **404** may look up and/or may otherwise identify a predefined value based on a type of a resource, a size of a resource, an energy source, a hardware component, and/or a program component for processing the resource. The predefined value may be a measure of a processing cost and/or may be an input for determining a measure of a processing cost expressed according to an identified metric. For example, a predefined value may be multiplied by a measure of time that a resource may be processed by a program component to produce a time based metric such as disk reads per minute.

[0078] In another aspect, a cost monitor component **404** may determine a measure of a processing cost by calculating the measure according to the specified metric and/or may interoperate with a sensor, such as a thermometer, in measuring a cost of processing. Cost monitor component **404** may include and/or otherwise access one or

more measurement components for determining a measure according to one or more metrics.

[0079] In Fig. 4a, cost monitor component **404a** is illustrated operating in application **403a**. Cost monitor component **404a** may determine a measure of a processing cost for resources processed by application **403a**. The resources may include resources provided by application **403a** to other applications, subsystems, and/or components operating in execution environment **401a** and/or in another execution environment included in and/or otherwise provided by one or more devices.

[0080] For example, application **403a** may present selection window **606** in Fig. 6**.** The resources processed by application **403a** may include data, represented by resource icons **608**, to send to another node. Cost monitor component **404a** may determine a measure of a processing cost for transmitting the data to the other node via a particular physical network media physically coupled to a network adapter in execution environment **401a.** Cost monitor component **404a** may be configured with and/or otherwise may determine a measure based on a count of bytes in the resources and/or in an encoded translation of the resource(s) for transmitting.

[0081] In Fig. 4b, cost monitor component **404b** is illustrated operating at least partially in network application agent **405b**. Some or all of network application agent **405b** may be received by browser **403b**, operating in user node **502** in Fig. 5, from network application **403d** in Fig. 4d operating in application provider node **506** in Fig. 5 as described above. Fig. 4d illustrates cost monitor component **404d** operating in network application **403d**. Cost monitor component **404b** and/or cost monitor component **404d**

may determine a measure of a processing cost for resources processed by network application **403d** and/or network application agent **405b**. Cost monitor component **404b** and/or cost monitor component **404d** may be components in a cost monitor system distributed between network application agent **405b** and network application **403d**. Cost monitor component **404b** and/or cost monitor component **404d** may operate independently. Operating independently may include one of the cost monitor components operating in the absence of the other cost monitor component. Resources may include resources provided by network application agent **405b** to browser **403b** and/or extensions of browser **403b**. The resources may further include resources provided to other nodes in network **504** by network application agent **405b** and/or network application **403d**. Network application agent **405b** may interoperate with browser **403b** to present selection window **606** in Fig. 6 in a browser window or tab (not shown)**.** The resources processed may be represented by resource icons **608**.

[0082] Cost monitor component **404b** and/or cost monitor component **404d** may determine a measure of a processing cost for processing one or more resources where processing the resources includes transmitting the resources via network **504** in Fig. 5**.** Transmitting resource data may include encoding, decoding, filtering, translating, and/or transforming some or all of the data in a resource in some manner. For example, a resource may be compressed prior to transmitting via network **504**. Cost monitor component **404b** may determine a metric based on a type of physical layer network included in network **504**, may determine a metric based on an encoding, decoding, and/or other transformation, may determine a metric based on a manufacturer and/or

type of network interface component, and/or may determine a metric based on network throughput data and/or other network attributes and/or metadata. The measure may be a cost for transmitting a web document via a network including a modem, a cost for retrieving image data in the web document from a hard drive, a cost for decoding data received via network **504**, and/or a cost for transmitting data over a secure network connection. Cost monitor component **404b** and/or cost monitor component **404d** may be configured with and/or otherwise may identify a predefined measure of a processing cost according to a metric selected by a developer of browser **403b** and/or based on version information for browser **403b**.

[0083] In Fig. 4c, cost monitor component **404c** is illustrated operating in cost management subsystem **407c**. Cost management subsystem **407c** may be a subsystem of execution environment **401c** that provides services to a number of program components operating in execution environment **401c** and/or in another execution environment communicatively coupled to a network **504** in Fig. 5. Cost monitor component **404c** may determine measures of a processing cost(s) for various resources processed by various applications **403c** operating in execution environment **401c**. The resources may include resources provided to and/or otherwise accessible to applications **403c** via various subsystems of execution environment **401c**, such as a file system (not shown) and/or network stack **411c**.

[0084] For example, selection window **606** in Fig. 6 may be presented as a document navigation window presented by execution environment **401c**. "Op1" presented in operation bar **610** may invoke first application **403c1** for processing a currently selected

resource, illustrated as resource icon **6082b**. “Op2” in operation bar **610** may be a user interface control for invoking second application **403c2** for one or more selected resources represented by resource icons **608**. Resources processed by first application **403c1** may include documents having various content types. Cost monitor component **404c** may determine a measure of a processing cost for the documents expressed by a metric based on the format of the respective documents identified by a content type and based on an operation for processing the documents. The operation may be performed by application **403c1** and/or may be performed by one or more other components.

[0085] For example, for a particular device a file system operation may be configured to be an operation for determining a measure of a processing cost for a resource processed by first application **403c1**. In Fig. 4c, cost management subsystem **407c** may determine processing costs for resources, freeing applications **403c** from determining processing costs. Note that, in an aspect, at least some of cost management subsystem **407c** may operate in a node other than the node included in and/or providing execution environment **401c**. For example, some or all of the arrangement of components may be adapted to operate in execution environment **401d**, which includes and/or is otherwise provided by application provider node **506**.

[0086] Cost monitor component **404a** is illustrated operating in application **403a**. Cost monitor component **404a** may determine a measure of a processing cost for resources processed by application **403a**. Application **403a** is a program component and may include one or more program components. The resources may include resources provided by application **403a** to other applications, subsystems, and/or components

operating in execution environment **401a** and/or in another execution environment included in and/or otherwise provided by one or more devices. For example, application **403a** may present selection window **606** in Fig. 6**.** The resources processed by application **403a** may include images and videos represented by background resource icons **608**. Cost monitor component **404a** may determine a measure of a processing cost for presenting the images and/or videos as desktop backgrounds. For example, cost monitor component **404a** may be configured with and/or otherwise may determine a measure based on a count of display refreshes over a specified period of time for the various resources to determine a measure of a processing cost for presenting the various respective resources.

[0087] Returning to Fig. 2, block **206** illustrates that the method yet further includes selecting one of the first resource and the second resource based on the at least one of the first measure and the second measure. Accordingly, a system for selecting a resource based on a measure of a processing cost includes means for selecting one of the first resource and the second resource based on the at least one of the first measure and the second measure. For example, as illustrated in Fig. 3, cost director component **306** is configured for selecting one of the first resource and the second resource based on the at least one of the first measure and the second measure. Figs. 4a-d illustrate cost director components **406** as adaptations and/or analogs of cost director component **306** in Fig. 3. One or more cost director components **406** operate in an execution environment **401**.

[0088] In an aspect, a resource may be selected and/or otherwise identified based on selection information received in response to a user input detected by an input device and based on a measure of a processing cost. The measure and/or an indication based on the measure may be presented for respective resources for processing by a particular program component. For example, a user may open and/or otherwise initiate operation of an application **403a** in Fig. 4a. Application **403a** may present, in selection window **606** in Fig.6, a user interface for selecting one or more resources from multiple resources for processing by the application. For example, cost director component **406a** in Fig. 4a may send presentation information to present a cost indication for the one or more resources presented in selection window **606** in Fig. 6, allowing a user to select a resource represented by a particular resource icon **608** from the resources represented by respective resource icons. Selection input from a user identifying a resource represented by the particular icon may be received and/or otherwise selected based on a cost indication presented for the resource. The cost indication is based on a measure of a processing cost for the resource.

[0089] A user input selecting a resource for processing by the application may be detected by a UI element handler **433a** for the selection user interface and/or for the representation of the resource. In an aspect, cost director component **406a** may determine whether to send presentation information to present a cost indication for a resource based on a cost condition, such as an energy condition. For example, cost monitor component **404a** may evaluate a specified energy condition based on a determined measure of a processing cost for a resource. When the energy condition is

met, cost director component **406a** interoperating with cost monitor component **404a** may select one or more resources for processing and send presentation information for presenting the resource in the selection user interface. When the condition is not met, the resource is not selected for presenting. Thus a selectable representation of a resource may be a cost indication based on a measure of a cost of processing. In the aspect, only resources that meet a particular energy condition may be selected. For example, in Fig. 6 normally presented resource icons **608** may be presented as selectable as directed by cost director component **406**. Pattern icons such as icon **608mb** may be presented as non-selectable by cost director component **406**, so that user input corresponding to icon **608mb** is not processed as a selection of the resource as analogous input for normally presented icons is processed as a selection.

[0090] Fig. 6 also illustrates presenting a cost indication based on a measure of a processing cost for a resource. The measure may be determined based on a metric for measuring a particular cost of processing and presented as a numeric indication based on the measure. Cost indications determined for the respective resources are illustrated by resource icons **608** in Fig. 6. For example, the illustrated indications in Fig. 6 are based on a five-point scale providing relative indications of a processing cost for the respective resources. An indication of “5” may be defined as a cost indication for a most expensive resource or resources for processing according the metric. A “1” indication may indicate resources that require the least cost according to the metric as presented according to the five-point scale. The cost indications may change based on an operation selected in operation bar **610**. A resource may be selected for presentation in

a region based on a cost indication. A user may select a resource for processing from the presented resource representations based on the presented cost indications.

[0091] A region of display presentation space **602** may be designated for presenting a resource having a cost that matches a specified cost condition. For example, higher-cost resources may be placed relatively closer to the bottom of a screen than relatively lower-cost resources. A position in a screen may be a cost indication. In another aspect, an orientation of a UI element representing and/or associated with a resource may be defined as a cost indication based on a specified measure according to a particular metric. Variations in other user detectable attributes may be configured as indications for various metrics in other aspects.

[0092] A cost director component **406** may change or otherwise provide for changing a pointing device representation, such as a mouse pointer, when it approaches and/or is in a location of a presented resource, as a cost indication based on a measure according to a particular metric for processing a resource represented by a UI element in the location. For example, different colors of the pointer may be defined as different indications associated with different measures of a processing cost. Alternatively or additionally, a pointer may be deactivated for selecting a resource based on a measure of a processing cost for the resource. In an aspect, a resource may be automatically selected when a cost condition based on a measure of a processing cost is met. Thus automatic selection may be a cost indication.

[0093] In Fig. 4d, cost director component **406d** in network application **403d** may send information via a response to a request and/or via an asynchronous message to a

client, such as browser **403b** and/or network application agent **405b**, to present a user detectable indication of a measure of a processing cost for a resource. One or more resources may be selected for representing. The one or more resources may be selected based on their respective measures and/or corresponding cost indications.

[0094] In another aspect, a user input for selecting a resource may be detected. A warning indication may be presented, in response to receiving the selection, when an energy condition, based on a measure of energy for the resource, is not met. A cost director component **406** may direct a UI element handler component **433** to present a warning when cost monitor component **404** determines that an energy condition is not met for the selected resource, based on a determined measure of a processing cost for the resource. The measure of a processing cost may be based on an energy metric.

[0095] An indication of a measure of a processing cost for a resource may include presenting a representation of the resource in a plurality of representations of resources according to an order of respective measures of processing costs determined for the resources in the plurality.

[0096] Presentation information for presenting a cost indication may be sent in a message via a network to a node operatively coupled to an output device. Cost director component **406d** in Fig. 4d operating in application provider node **506** in Fig. 5 may send presentation information in response to a request from network application agent **405b** in Fig. 4b operating in user node **502**.

[0097] A change in a measure of a processing cost associated with a resource being processed and/or change in a measure of a processing cost of an alternative and./or

additional resource may be detected. In response to one or more detected changes, an alternative and/or an additional resource may be selected for respectively identifying to a program component instead of and/or in addition to the resource currently being processed.

[0098] For example, cost management subsystem **407c** in Fig. 4c may monitor a level of energy in a battery providing energy for a handheld device. Cost management subsystem **407c** may invoke cost monitor component **404c** in response to detecting a battery energy level falling below a specified threshold. Cost monitor component **404c** may recalculate and/or otherwise determine a measure of a processing cost for one or more resources in response to the change in battery state. Cost monitor component **404c** may provide changed measures of a processing cost to cost director component **406c**. Cost director component **406c** may select an alternative and/or an additional resource, depending on the change to cost operations component **408c**, for identifying to the program component.

[0099] In an aspect, an energy condition may be specified. A measure of a processing cost determined for a resource may be determined for evaluating an energy condition to determine whether the energy condition is met. An energy condition may be identified for evaluating and/or may be evaluated based on an energy source, an amount of energy available, an amount of energy available in a battery and/or other energy store, an amount of energy used and/or currently being used for processing another resource, a location of the device, and a time required for restoring an energy store to a specified

state, to name a few examples. A location of a device may be a location with respect to another location for charging or changing energy sources.

[0100] When an energy condition and/or other cost condition is not met for a resource, a cost director component 406 may select one or more alternative resources to a first resource based on one or more respective measures of a processing cost determined by a corresponding cost monitor component 404. One or more representations of the respective one or more alternative resources may be selected for presenting to a user. A user input may be received from the user for selecting an alternative resource. A user input may be received indicating that the first resource is to be provided to the program component for processing. In yet another alternative, a cost director component 406 may automatically select an alternative resource that meets the energy condition and/or other cost condition for processing instead of the first resource. In an additional aspect, the first resource may meet the energy condition and cost director component 406 may select one or more resources from the alternatives to identify to the program component in addition to the first resource. Cost director component 406 may identify the additional resource(s) automatically or may receive input from a user to identify one or more additional resources.

[0101] Also as described above, a resource may be selected automatically, based on a measure of a processing cost for the resource, by a cost director component **406**. Cost operations component **408** may access the resource, transform the resource into a format suitable for processing by the program component, and/or otherwise identify the resource to the program component for processing.

[0102] Returning to Fig. 2, block **208** illustrates that the method yet further includes identifying, to the program component, the selected one of the first resource and the second resource for processing. Accordingly, a system for selecting a resource based on a measure of a processing cost includes means for identifying, to the program component, the selected one of the first resource and the second resource for processing. For example, as illustrated in Fig. 3, cost operations component **308** is configured for identifying, to the program component, the selected one of the first resource and the second resource for processing. Figs. 4a-d illustrate cost operations components **408** as adaptations and/or analogs of cost operations component **308** in Fig. 3. One or more cost operations components **408** operate in an execution environment **401**.

[0103] As described above, resources may be selected, based on a measure of a processing cost, in response to detecting a user input for selecting the resource. Selection information may be received by a UI element handler component **433** for a selectable representation of a resource. The UI element handler component **433** receiving the selection information may provide and/or otherwise identify the resource to cost operations component **408**. Cost operations component **408** may access the resource, transform the resource into a format suitable for processing by the program component, and/or identify the resource to the program component for processing.

[0104] In Fig. 4a, cost operations component **408a** may identify a resource selected based on a measure of a processing cost to any one or more components in application **403a**. In Fig. 4b and in Fig. 4d, cost operations component **408b** and/or cost operations

component **408d** may identify a resource selected based on a measure of a processing cost to any one or more components in browser **403b**, network application agent **405b**, and/or to network application **403d** in Fig. 4d. Cost operations component **408b** and cost operations component **408d** may operate alone without the presence of the other, may operate independently while the other is operating, or may interoperate to identify the selected resource in various aspects. In Fig. 4c, cost operations component **408c** may identify a resource selected based on a measure of a processing cost to any of one or more program components including various applications **403c**. Alternatively or additionally, cost operations component **408c** may identify a resource selected based on a measure of a processing cost to a program component operating in another execution environment including and/or otherwise provided by another node.

[0105] Also as described above, a resource may be identified automatically, in response to being selected. A cost operations component **408** may access the resource, transform the resource into a format suitable for processing by the program component, and/or otherwise identify the resource to the program component for processing.

[0106] A program component may be performing an operation that includes processing a first resource. A second resource selected based on a measure of a processing cost may be identified to the program component to perform the operation instead of the first resource. For example, application **403a** in Fig. 4a operating in a user device, such as user node **502** in Fig. 5, may present a resource as desktop background **604** in Fig. 6. When user node **502** is operating on a battery with an estimated energy available

exceeding a specified time threshold, such as one hour, cost operations component **408a** may select a video resource to present in display presentation space **602** as desktop background **604** based on a measure of a processing cost determined for the video resource. When user node **502** is operating on a battery with an estimated energy available less than a specified time threshold, such as one hour, cost operations component **408a** may select a still image resource to present in display presentation space **602** as desktop background **604** where a measure of a processing cost for the still image meets an energy condition based on the energy available in the battery and the video does not meet the condition.

[0107] In another aspect, a program component may be performing an operation that includes processing a first resource. A second resource selected based on a measure of a processing cost may be identified to the program component to perform the operation in addition to performing the operation including processing the first resource. For example, network application agent **405b** in Fig. 4b operating in user node **502** may upload files to network application **403d** operating in application provider node **506** via network **504**. When network **504** is an intranet in a home or business with no monetary charge based on bandwidth utilization, a measure of processing cost based on a metric for measuring the monetary cost of bandwidth may be zero or near zero for resources to transfer from user node **502** to application provider node **506**. A user may select a first resource for upload. Based on the bandwidth cost, cost operations component **408b** may identify an additional resource to transmit, in parallel with the first resource, from user node **502** to application provider node **506** to transfer. Alternatively or additionally,

cost operations component **408d** may send a matching criterion to identify one or more additional resources to receive in parallel with the first resource from network application agent **405b** operating in browser **403b**.

[0108] As described herein, a resource may be selected based on a measure of a processing cost. At some time after the selection, the resource may be identified to a program component in response to detecting a specified event. A number of resources may be selected based on respective measures of a processing cost. The resources may be associated with a number of respective events. In response to a first event in the number of events, a first resource associated with the first event may be identified to a program component. In Fig. 4c, cost management subsystem **407c** may change permissions, roles, etc. for selected resources based on measures of a processing cost allowing access to and/or otherwise identifying resources that match a current cost condition.

[0109] The method illustrated in Fig. 2 may include additional aspects supported by various adaptations and/or analogs of the arrangement of components in Fig. 3. Receiving resource information identifying a resource may include intercepting a communication for performing an operation, detecting an access for retrieving the resource, reading a message recording at least one of an access to the resource and a request for performing an operation, identifying a mapping identifying the type of the resource and an operation, and/or detecting a change in a program component for performing an operation, a change in the resource, and a change in a hardware component included in processing the resource. A cost advisor component **402** in Figs.

4a-d may be configured to interoperate with various components, to receive resource information, including a file system, a data store, a data storage device, a GUI subsystem **437**, an input driver **441**, a network stack **411**, and an application protocol component **413**, to name a few examples.

[0110] Receiving resource information may include receiving a communication, intercepting a communication, and/or initiating a communication. Receiving the resource information may include detecting an access to at least one of the first resource, the second resource, and the program component. Detecting an access may include detecting an access to at least one of a semaphore, a lock, a data storage location, a component of a input subsystem, a component of a presentation subsystem, a storage subsystem, a component of a networking subsystem, a component of a graphics subsystem, a component of an audio subsystem, a display adapter, a display device, an audio adapter, an audio output device, a tactile presentation subsystem, a tactile output device, an access control component, a serialization component, a synchronization component, a thread, an input device driver, an input device, another application, a code library, a database, a service operating in remote node via a network, text data, image data, audio data, tactile data, a message formatted according to a communication protocol, a service, a presence entity, a subscription, a software component, a hardware component, a transaction, a media stream, a location, a measuring device, data, an instruction, a persistently stored resource, a resource stored in volatile storage, a network resource, a preexisting resource, a dynamically generated

resource which may already exist, a service for generating the resource, a font, an encoding, a format, a mechanical resource, and an optical resource.

[0111] Image data may include a still image, a video, a background image, and/or an image for representing another resource. Audio data may include a song, a voice message, and/or a sound for indicating an event.

[0112] Exemplary hardware components that may be included in processing a resource include an IPU, an output device, a storage device, an input device, a networking component, a bus, a physical processor memory, and/or a switching fabric.

[0113] A metric may be selected based on a resource, an operation, a hardware component, the program component, a user, a group, a role, a task, a time, a location, and/or a device for performing the operation and/or for providing the resource. A metric for measuring a processing cost for a resource may be based on at least one of the resource, an operation included in processing the resource, a hardware component included in performing an operation that includes processing the resource, a user, a group, a role, a task, a time, a location, and hardware for providing and/or otherwise maintaining the resource. For example, a cost monitor component **404** may monitor a rate of energy received by a display device for an image resource presented and/or to be presented by the display device. A cost monitor component **404** may determine a measure of a processing cost according to a metric based on a count of bytes in a file resource for transmitting a resource via a network.

[0114] Various aspects and adaptations of cost monitor component **304** in Fig. 3 may determine a measure of a processing cost for a metric based on a flow of electricity,

stored energy, mechanical resistance, electrical resistance, time, a count of a particular energy related event, money, an environmental impact, a health impact, a change in size, a change in mass and/or weight, a safety impact, heat, light, and/or movement. Correspondingly, various aspects and adaptations of cost monitor component **304** may determine a measure of electrical energy, a measure of stored energy, a measure of mechanical resistance, a measure of electrical resistance, a measure of time, a count of a particular event, a measure of monetary cost, a measure of heat, a measure of light, a measure of distance, a measure of mass, a measure of size, and/or a measure of weight.

[0115] A processing cost may be based on a flow of electricity, stored energy, mechanical resistance, electrical resistance, time, a count of a particular event, money, a size, mass, weight, heat, light, and/or movement. A first measure and a second measure may include a measure of electrical energy, a measure of stored energy, a measure of mechanical resistance, a measure of electrical resistance, a measure of time, a count of a particular event, a measure of monetary cost, a measure of heat, a measure of light, a measure of distance, a measure of mass, a measure of size, and/or a measure of weight. A count may be based on IPU cycles, disk spins, data read operations, data write operations, refreshes of at least a portion of a presentation space, display refreshes, data transmitted via a network, data received via a network, and/or human movement. A measure of human movement may be based on a measure of dispersion of key presses; a pattern and frequency of movement of a tracking device;

and a count of at least one of key presses, squeezes, pushes, pulls, changes between lower case and upper case, and/or a count of numerical digits.

[0116] A measure of a processing cost may be determined based on a previously determined measure of a processing cost. Determining a measure may be based on locating a predefined measure based on at least one of the resource and the program component.

[0117] Determining a measure may include sending a message via a network to a node for determining the measure. A response may be received via the network including and/or otherwise identifying the measure.

[0118] In an aspect, an energy condition may be specified. A measure of a processing cost determined for a resource may be determined for evaluating an energy condition to determine whether the energy condition is met. An energy condition may be identified for evaluating and/or may be evaluated based on an energy source, an amount of energy available, an amount of energy available in a battery and/or other energy store, an amount and/or rate of energy used and/or currently being used for processing another resource, a location of the device, and a time required for restoring an energy store to a specified state, to name a few examples.

[0119] In response to determining whether an energy condition is met for a resource, a representation of the resource presented by an output device may be presented as user selectable or not user selectable. For example, in Fig. 4c when an amount of energy available from a battery in a mobile device falls below a specified threshold, files over a specified size may not be presented or may be presented but not selectable for

attaching to an email by an email application represented by second application **403c2**. In Fig. 4b and in Fig. 4d, one or both of cost monitor component **404b** and cost monitor component **404d** may receive information identifying a monetary cost of transmitting data via a current network access provider. Based on the cost, certain resources may be presented as selectable for certain operations including transmitting data in the resources and may be presented as not selectable for other network operations based on one or more cost conditions associated with the operations, the program components, and/or the resources. A first resource may be selected for presenting as user selectable, and a second resource may be not be presented or may be presented as un-selectable.

[0120] A resource may be selected from a plurality of resources in response to user selection information. For example, a first selectable representation of a first resource and a second selectable representation of a second resource may be presented to a user based on respective measures of a processing cost. Selection information may be received in response to a detected user input identifying a resource to be selected from the plurality.

[0121] A selected resource may be identified to a program component for processing instead of a resource currently being processed by the program component. A selected resource may be identified to a program component for processing in addition to a resource currently being processed by the program component.

[0122] A resource may be identified to a program component by disabling access to other resources and allowing access to the resource identifying the resource to the

program component. A cost operations component **408** in Figs. 4a-d may be configured to enable and/or disable access to resources selected by a corresponding cost director component **406**.

[0123] Identifying a selected resource to a program component may include providing for terminating processing of a resource currently being processed by the program component. Terminating processing of the resource may include terminating processing of the program component. Subsequently, processing of the selected resource by the program component may be initiated. Initiating processing of the selected program component may include initiating and/or restarting operation of the program component. For example, cost operations component **408c** in Fig. 4c may restart application **403c1** identifying a selected resource for processing by restarted application **403c1**.

[0124] In an example, a first resource may include first image data, the second resource may include second image data, and the program component may be configured to present image data in a presentation space of a display allocated for presenting a desktop image. An energy condition may be detected during presentation of the first image data in the presentation space by the program component. The second resource may be selected based on a first measure of a processing cost for the first resource and a second measure of the processing cost for the second resource. The selection may be in response to detecting the condition. In response to the selection, the second resource may be identified to the program component to present the second image data in the presentation space.

[0125] In various aspects of the method illustrated in Fig. 2, at least one of receiving the resource information, determining at least one of the first measure and the second measure, selecting one of the first resource and the second resource, and identifying the selected one of the first resource and the second resource may be performed in response to at least one of detecting a change in a first energy source, receiving energy from a first energy source then receiving energy from a second energy source, detecting that energy is flowing to a first source increasing the amount of energy stored in the first source, and detecting a change in an amount of energy available from a first energy source. For example, cost management subsystem **407c** in Fig. 4c may detect a change in receiving energy from an electrical outlet to receiving energy from a battery in execution environment **401c**. In response to detecting the change, cost director component **406c** may select a resource based on a measure of a processing cost. In response to detecting the change, cost operations component **408c** may identify a selected resource to a program component for processing.

[0126] In various aspects of the method illustrated in Fig. 2,at least one of receiving the resource information, determining at least one of the first measure and the second measure, selecting one of the first resource and the second resource, and identifying the selected one of the first resource and the second resource may be performed in response to a change in at least one of a monetary cost of energy, an organization providing energy, a rate of energy utilization, a utilization time of a first energy source, a user, a geospatial location, heat, light, and a component for at least one of storing, transmitting, and receiving energy. For example, in Fig. 4c, a cost management

subsystem **407c** may receive event information identifying one or more of listed events and/or conditions in directing performance of the method illustrated in Fig. 2 by the arrangement of components illustrated in Fig. 4c.

[0127] In another example, cost director component **406a** in Fig. 4a may detect a change in an amount of energy. In an aspect, energy may be flowing from a first energy source to one or more hardware components. Subsequently, energy may be detected flowing to the first energy source. Cost director component **406a** may select a resource from a plurality of resources based on a measure of a processing cost for one or more of the respective resources in the plurality. Alternatively or additionally, cost operations director component **408a** may identify a selected resource to a program component for processing in response to detecting a change in energy received from an energy source.

[0128] This application is related to the following which are each incorporated herein by reference in their entirety for all purposes: U.S. Patent Application No. 14/294,059, entitled "METHODS, SYSTEMS, AND COMPUTER PROGRAM PRODUCTS FOR SELECTING A RESOURCE BASED ON A MEASURE OF A PROCESSING COST," filed 06-02-2014 which in turn claims priority to U.S. Patent Application No. 12/857,851, entitled "METHODS, SYSTEMS, AND COMPUTER PROGRAM PRODUCTS FOR SELECTING A RESOURCE BASED ON A MEASURE OF A PROCESSING COST," filed 08-17-2010; U.S. Patent Application No. 13/941,502, entitled "METHODS, SYSTEMS, AND COMPUTER PROGRAM PRODUCTS FOR PROCESSING A NON-RETURNABLE COMMAND RESPONSE BASED ON A MARKUP ELEMENT," filed 07-

14-2013 which in turn claims priority to U.S. Patent Application No. 12/789,550, entitled "METHODS, SYSTEMS, AND COMPUTER PROGRAM PRODUCTS FOR PROCESSING A NON-RETURNABLE COMMAND RESPONSE BASED ON A MARKUP ELEMENT," filed 05-28-2010; U.S. Patent Application No. 13/477,402, entitled "METHODS, SYSTEMS, AND COMPUTER PROGRAM PRODUCTS FOR SHARING INFORMATION FOR DETECTING AN IDLE TCP CONNECTION," filed 05-22-2012 which in turn claims priority to U.S. Patent Application No. 12/714,454, entitled "METHODS, SYSTEMS, AND COMPUTER PROGRAM PRODUCTS FOR SHARING INFORMATION FOR DETECTING AN IDLE TCP CONNECTION," filed 02-27-2010; U.S. Patent Application No. 12/857,847, entitled "METHODS, SYSTEMS, AND PROGRAM PRODUCTS FOR PRESENTING AN INDICATION OF A COST OF PROCESSING A RESOURCE," filed 08-17-2010; U.S. Patent Application No. 12/857,857, entitled "METHODS, SYSTEMS, AND PROGRAM PRODUCTS FOR SELECTING A RESOURCE IN RESPONSE TO A CHANGE IN AVAILABLE ENERGY," filed on 08-17-2010; U.S. Patent Application No. 12/857,836, entitled "METHODS, SYSTEMS, AND PROGRAM PRODUCTS FOR MAINTAINING A RESOURCE BASED ON A COST OF ENERGY," filed 08-17-2010; U.S. Patent No. 8,346,853, entitled "METHODS, SYSTEMS, AND PROGRAM PRODUCTS FOR PROCESSING AN ATTACHED COMMAND RESPONSE," filed 05-27-2010; U.S. Patent Application No. 12/788,373, entitled "METHODS, SYSTEMS, AND PROGRAM PRODUCTS FOR PREVENTING PROCESSING OF AN HTTP RESPONSE," filed 05-27-2010; U.S. Patent Application No. 12/789,538, entitled "METHODS, SYSTEMS, AND PROGRAM

PRODUCTS FOR PROCESSING AN ATTACHED COMMAND RESPONSE BASED ON A MARKUP ELEMENT," filed 05-28-2010; U.S. Patent Application No. 12/788,381, entitled "METHODS, SYSTEMS, AND PROGRAM PRODUCTS FOR PROCESSING A COMBINED COMMAND RESPONSE," filed 05-27-2010; U.S. Patent Application No. 12/789,568, entitled "METHODS, SYSTEMS, AND PROGRAM PRODUCTS FOR PROCESSING A COMBINED COMMAND RESPONSE BASED ON A MARKUP ELEMENT," filed 05-28-2010; and U.S. Patent Application No. 12/714,063, entitled "METHODS, SYSTEMS, AND PROGRAM PRODUCTS FOR DETECTING AN IDLE TCP CONNECTION," filed on 02-26-2010. It should be noted that any feature disclosed in the context of any embodiment of this and/or any of the foregoing applications may be incorporated in the context of any embodiment of this and/or any of the foregoing applications.

[0129] To the accomplishment of the foregoing and related ends, the descriptions and annexed drawings set forth certain illustrative aspects and implementations of the disclosure. These are indicative of but a few of the various ways in which one or more aspects of the disclosure may be employed. The other aspects, advantages, and novel features of the disclosure will become apparent from the detailed description included herein when considered in conjunction with the annexed drawings.

[0130] It should be understood that the various components illustrated in the various block diagrams represent logical components that are configured to perform the functionality described herein and may be implemented in software, hardware, or a combination of the two. Moreover, some or all of these logical components may be

combined, some may be omitted altogether, and additional components may be added while still achieving the functionality described herein. Thus, the subject matter described herein may be embodied in many different variations, and all such variations are contemplated to be within the scope of what is claimed.

[0131] To facilitate an understanding of the subject matter described above, many aspects are described in terms of sequences of actions that may be performed by elements of a computer system. For example, it will be recognized that the various actions may be performed by specialized circuits or circuitry (e.g., discrete logic gates interconnected to perform a specialized function), by program instructions being executed by one or more instruction-processing units, or by a combination of both. The description herein of any sequence of actions is not intended to imply that the specific order described for performing that sequence must be followed.

[0132] Moreover, the methods described herein may be embodied in executable instructions stored in a computer readable medium for use by or in connection with an instruction execution machine, system, apparatus, or device, such as a computer-based or processor-containing machine, system, apparatus, or device. As used here, a "computer readable medium" may include one or more of any suitable media for storing the executable instructions of a computer program in one or more of an electronic, magnetic, optical, electromagnetic, and infrared form, such that the instruction execution machine, system, apparatus, or device may read (or fetch) the instructions from the computer readable medium and execute the instructions for carrying out the described methods. A non-exhaustive list of conventional exemplary computer readable media

includes a portable computer diskette; a random access memory (RAM); a read only memory (ROM); an erasable programmable read only memory (EPROM or Flash memory); optical storage devices, including a portable compact disc (CD), a portable digital video disc (DVD), a high definition DVD (HD-DVD.TM.), and a Blu-ray.TM. disc; and the like.

[0133] Thus, the subject matter described herein may be embodied in many different forms, and all such forms are contemplated to be within the scope of what is claimed. It will be understood that various details may be changed without departing from the scope of the claimed subject matter. Furthermore, the foregoing description is for the purpose of illustration only, and not for the purpose of limitation, as the scope of protection sought is defined by the claims as set forth hereinafter together with any equivalents.

[0134] All methods described herein may be performed in any order unless otherwise indicated herein explicitly or by context. The use of the terms "a" and "an" and "the" and similar referents in the context of the foregoing description and in the context of the following claims are to be construed to include the singular and the plural, unless otherwise indicated herein explicitly or clearly contradicted by context. The foregoing description is not to be interpreted as indicating that any non-claimed element is essential to the practice of the subject matter as claimed.

I CLAIM:

1. A method for selecting a resource based on a measure of a processing cost, the method comprising:

receiving resource information identifying a first resource and a second resource for processing by a program component;

determining at least one of a first measure of a specified processing cost for the processing of the first resource and a second measure of the processing cost for the processing of the second resource;

selecting one of the first resource and the second resource based on the at least one of the first measure and the second measure; and

identifying, to the program component, the selected one of the first resource and the second resource for processing.

2. The method of claim 1 wherein at least a portion of the resource information is received in response to processing the first resource by the program component.

3. The method of claim 1 wherein the processing cost is measured based on energy received from at least one of a battery and an energy source for charging a battery.

4. The method of claim 1 wherein the at least one of the first measure and the second measure includes at least one of a measure of electrical power, a measure of electrical energy, a measure of stored energy, a measure of mechanical resistance, a

measure of electrical resistance, a measure of time, a count of a particular event, a measure of a monetary cost, a measure of heat, a measure of light, a measure of distance, a measure of mass, a measure of size, and a measure of weight.

5. The method of claim 4 wherein the count is based on at least one of processor cycles, disk spins, data read operations, data write operations, refreshes of at least a portion of a presentation space, display refreshes, data transmitted via a network, data received via a network, and a measure of human movement.

6. The method of claim 1 wherein a metric for measuring the processing cost is determined based on at least one of the first resource, the second resource, an operation, a hardware component, the program component, a user, a group, a role, a task, a time, a location, a device for performing the operation, and a device for providing the resource.

7. The method of claim 1 wherein at least one of the first measure and the second measure is determined in response to a user input for measuring the processing cost.

8. The method of claim 1 wherein determining at least one of the first measure and the second measure is based on a previous determination of a measure of a processing cost.

9. The method of claim 1 wherein determining at least one of the first measure and the second measure is based on locating a predefined measure based on at least one of the first resource, the second resource, and the program component.

10. The method of claim 1 wherein determining at least one of the first measure and the second measure comprises:

sending a message via a network to a node for determining at least one of the first measure and the second measure; and

receiving a response via the network identifying at least one of the first measure and the second measure.

11. The method of claim 1 wherein the selecting comprises:

comparing the first measure and the second measure; and

selecting one of the first resource and the second resource based on the comparing.

12. The method of claim 1 wherein in the selecting comprises:

communicating with an output device to present a first selectable representation of the first resource and a second selectable representation of the second resource to a user;

receiving selection information identifying one of the first resource and the second resource, in response to a detected user input: and

selecting the identified resource.

13. The method of claim 1 wherein the selected one of the first resource and the second resource is identified to the program component for processing instead the not selected one of the first resource and the second resource currently being processed by the program component.

14. The method of claim 1 wherein the selected one of the first resource and the second resource is identified to the program component for processing in addition to the not selected one of the first resource and the second resource currently being processed by the program component.

15. The method of claim 1 wherein identifying the selected one of the first resource and the second resource to the program component comprises:

disabling access, for the program component, to the not selected one of the first resource and the second resource;

and enabling access, for the program component, to the selected one of the first resource and the second resource.

16. The method of claim 1 wherein identifying the selected one of the first resource and the second resource to the program component comprises:

providing for terminating at least one of the program component and a processing of an unselected one of the first resource and the second resource by the program component; and

subsequently at least one of restarting the program component configured to process the selected one of the first resource and the second resource and starting processing to process the selected one of the first resource and the second resource.

17. The method of claim 1 wherein at least one of receiving the resource information, determining at least one of the first measure and the second measure, selecting the one of first resource and the second resource, and identifying the selected

one of the first resource and the second resource is performed in response to at least one of detecting a change in a first energy source, receiving energy from a first energy source then receiving energy from a second energy source, detecting that energy is flowing to a first source increasing the amount of energy stored in the first source, and detecting a change in an amount of energy available from a first energy source.

18. The method of claim 1 wherein at least one of receiving the resource information, determining at least one of the first measure and the second measure, selecting the one of the first resource and the second resource, and identifying the selected one of the first resource and the second resource is performed in response to a change in at least one of a monetary cost of energy, an organization providing energy, a rate of energy utilization, a utilization time of a first energy source, a user, a geospatial location, heat, light, and a component for at least one of storing, transmitting, and receiving energy.

19. A system for selecting a resource based on a measure of a processing cost, the system comprising:

a cost advisor component, a cost monitor component, a cost director component, and a cost operations component adapted for operation in an execution environment;

the cost advisor component configured for receiving resource information identifying a first resource and a second resource for processing by a program component;

the cost monitor component configured for determining at least one of a first measure of a specified processing cost for the processing of the first resource and a second measure of the processing cost for the processing of the second resource; and

the cost director component configured for selecting one of the first resource and the second resource based on the at least one of the first measure and the second measure; and

the cost operations component configured for identifying, to the program component, the selected one of the first resource and the second resource for processing.

20. A computer-readable medium embodying a computer program, executable by a machine, for selecting a resource based on a measure of a processing cost, the computer program comprising executable instructions for:

receiving resource information identifying a first resource and a second resource for processing by a program component;

determining at least one of a first measure of a specified processing cost for the processing of the first resource and a second measure of the processing cost for the processing of the second resource;

selecting one of the first resource and the second resource based on the at least one of the first measure and the second measure; and

identifying, to the program component, the selected one of the first resource and the second resource for processing.

ABSTRACT

Methods and systems are described for selecting a resource based on a measure of a processing cost. Resource information is received identifying a first resource and a second resource for processing by a program component. One or more of a first measure of a specified processing cost for the processing of the first resource and a second measure of the processing cost for the processing of the second resource is determined. One of the first resource and the second resource is selected based on at least one of the first measure and the second measure. The selected one of the first resource and the second resource is identified to the program component for processing.

Electronic Acknowledgement Receipt

EFS ID:	21868854
Application Number:	14667642
International Application Number:	
Confirmation Number:	1029
Title of Invention:	METHODS, SYSTEMS, AND COMPUTER PROGRAM PRODUCTS FOR SELECTING A RESOURCE BASED ON A MEASURE OF A PROCESSING COST
First Named Inventor/Applicant Name:	Robert Paul Morris
Customer Number:	92045
Filer:	Patrick Edgar Caldwell
Filer Authorized By:	
Attorney Docket Number:	PMOR0162B
Receipt Date:	24-MAR-2015
Filing Date:	
Time Stamp:	22:04:20
Application Type:	Utility under 35 USC 111(a)

Payment information:

Submitted with Payment	no

File Listing:

Document Number	Document Description	File Name	File Size(Bytes)/ Message Digest	Multi Part /.zip	Pages (if appl.)
1	Application Data Sheet	PMOR0162B_ADS_vF_24-Mar-2015.pdf	72690 df43d661d119f1d064b9d8c4dfea6a847f9a492e	no	7

Warnings:

Information:

This is not an USPTO supplied ADS fillable form					
2	Oath or Declaration filed	PMOR0162B_Decl_vF_24-Mar-2015.pdf	101713 1be067717f7ddc86f5a8cd1a0559bc65372884d9	no	2
Warnings:					
Information:					
3	Drawings-only black and white line drawings	PMOR0162B_Figs_vF_24-Mar-2015.pdf	132663 b0186c21b77e4534d67e2319e97edeea8a7ce8e6	no	9
Warnings:					
Information:					
4	Certification and Request for Missing Parts	PMOR0162B_MissingParts_Cert_vF_24-Mar-2015.pdf	48722 ec98a11cd243a2fa548fed65d6bc94b57ff385f3	no	3
Warnings:					
Information:					
5	Power of Attorney	PMOR0162B_POA_vF_24-Mar-2015.pdf	52114 a59175a8cb381209d326862d38f39cb2f7fb9070	no	2
Warnings:					
Information:					
6		PMOR0162B_APP_vF_24-Mar-2015.pdf	258697 3091c1c530a0db8ca18e192eb989de583b2719bd	yes	66

	Multipart Description/PDF files in .zip description		
	Document Description	**Start**	**End**
	Specification	1	59
	Claims	60	65
	Abstract	66	66

Warnings:	
Information:	
Total Files Size (in bytes):	666599

This Acknowledgement Receipt evidences receipt on the noted date by the USPTO of the indicated documents, characterized by the applicant, and including page counts, where applicable. It serves as evidence of receipt similar to a Post Card, as described in MPEP 503.

New Applications Under 35 U.S.C. 111
If a new application is being filed and the application includes the necessary components for a filing date (see 37 CFR 1.53(b)-(d) and MPEP 506), a Filing Receipt (37 CFR 1.54) will be issued in due course and the date shown on this Acknowledgement Receipt will establish the filing date of the application.

National Stage of an International Application under 35 U.S.C. 371
If a timely submission to enter the national stage of an international application is compliant with the conditions of 35 U.S.C. 371 and other applicable requirements a Form PCT/DO/EO/903 indicating acceptance of the application as a national stage submission under 35 U.S.C. 371 will be issued in addition to the Filing Receipt, in due course.

New International Application Filed with the USPTO as a Receiving Office
If a new international application is being filed and the international application includes the necessary components for an international filing date (see PCT Article 11 and MPEP 1810), a Notification of the International Application Number and of the International Filing Date (Form PCT/RO/105) will be issued in due course, subject to prescriptions concerning national security, and the date shown on this Acknowledgement Receipt will establish the international filing date of the application.

PTO/AIA/14 (03-13)
Approved for use through 01/31/2014. OMB 0651-0032
U.S. Patent and Trademark Office; U.S. DEPARTMENT OF COMMERCE
Under the Paperwork Reduction Act of 1995, no persons are required to respond to a collection of information unless it contains a valid OMB control number.

Application Data Sheet 37 CFR 1.76	Attorney Docket Number	PMOR0162B
	Application Number	
Title of Invention	METHODS, SYSTEMS, AND COMPUTER PROGRAM PRODUCTS FOR SELECTING A RESOURCE BASED ON A MEASURE OF A PROCESSING COST	

The application data sheet is part of the provisional or nonprovisional application for which it is being submitted. The following form contains the bibliographic data arranged in a format specified by the United States Patent and Trademark Office as outlined in 37 CFR 1.76.
This document may be completed electronically and submitted to the Office in electronic format using the Electronic Filing System (EFS) or the document may be printed and included in a paper filed application.

Secrecy Order 37 CFR 5.2

☐ Portions or all of the application associated with this Application Data Sheet may fall under a Secrecy Order pursuant to 37 CFR 5.2 (Paper filers only. Applications that fall under Secrecy Order may not be filed electronically.)

Inventor Information:

Inventor 1 Remove

Legal Name

Prefix	Given Name	Middle Name	Family Name	Suffix
	Robert	Paul	Morris	

Residence Information (Select One) ◉ US Residency ○ Non US Residency ○ Active US Military Service

City	Raleigh	State/Province	NC	Country of Residence	US

Mailing Address of Inventor:

Address 1	712 Latta Street		
Address 2			
City	Raliegh	**State/Province**	NC
Postal Code	27607	**Country**	US

All Inventors Must Be Listed - Additional Inventor Information blocks may be generated within this form by selecting the **Add** button. Add

Correspondence Information:

Enter either Customer Number or complete the Correspondence Information section below.
For further information see 37 CFR 1.33(a).

☐ **An Address is being provided for the correspondence Information of this application.**

Customer Number	92045		
Email Address	pcaldwell@thecaldwellfirm.com	Add Email	Remove Email

Application Information:

Title of the Invention	METHODS, SYSTEMS, AND COMPUTER PROGRAM PRODUCTS FOR SELECTING A RESOURCE BASED ON A MEASURE OF A PROCESSING COST		
Attorney Docket Number	PMOR0162B	**Small Entity Status Claimed**	☒
Application Type	Nonprovisional		
Subject Matter	Utility		
Total Number of Drawing Sheets (if any)		**Suggested Figure for Publication (if any)**	

Under the Paperwork Reduction Act of 1995, no persons are required to respond to a collection of information unless it contains a valid OMB control number.

Application Data Sheet 37 CFR 1.76	Attorney Docket Number	PMOR0162B
	Application Number	
Title of Invention	METHODS, SYSTEMS, AND COMPUTER PROGRAM PRODUCTS FOR SELECTING A RESOURCE BASED ON A MEASURE OF A PROCESSING COST	

Publication Information:

☐ Request Early Publication (Fee required at time of Request 37 CFR 1.219)

☐ **Request Not to Publish.** I hereby request that the attached application not be published under 35 U.S.C. 122(b) and certify that the invention disclosed in the attached application **has not and will not** be the subject of an application filed in another country, or under a multilateral international agreement, that requires publication at eighteen months after filing.

Representative Information:

Representative information should be provided for all practitioners having a power of attorney in the application. Providing this information in the Application Data Sheet does not constitute a power of attorney in the application (see 37 CFR 1.32).
Either enter Customer Number or complete the Representative Name section below. If both sections are completed the customer Number will be used for the Representative Information during processing.

Please Select One:	◉ Customer Number	○ US Patent Practitioner	○ Limited Recognition (37 CFR 11.9)
Customer Number	92045		

Domestic Benefit/National Stage Information:

This section allows for the applicant to either claim benefit under 35 U.S.C. 119(e), 120, 121, or 365(c) or indicate National Stage entry from a PCT application. Providing this information in the application data sheet constitutes the specific reference required by 35 U.S.C. 119(e) or 120, and 37 CFR 1.78.

Prior Application Status	Pending		Remove
Application Number	Continuity Type	Prior Application Number	Filing Date (YYYY-MM-DD)
	non provisional of	62137173	2015-03-23
Prior Application Status	Pending		Remove
Application Number	Continuity Type	Prior Application Number	Filing Date (YYYY-MM-DD)
	Continuation in part of	14294059	2014-06-02
Prior Application Status	Patented		Remove

Application Number	Continuity Type	Prior Application Number	Filing Date (YYYY-MM-DD)	Patent Number	Issue Date (YYYY-MM-DD)
14294059	Continuation of	12857851	2010-08-17	8745418	2014-06-03

Prior Application Status	Pending		Remove
Application Number	Continuity Type	Prior Application Number	Filing Date (YYYY-MM-DD)
	Continuation in part of	13941502	2013-07-14
Prior Application Status	Patented		Remove

Application Number	Continuity Type	Prior Application Number	Filing Date (YYYY-MM-DD)	Patent Number	Issue Date (YYYY-MM-DD)
13941502	Continuation of	12789550	2010-05-28	8577958	2013-11-05

Under the Paperwork Reduction Act of 1995, no persons are required to respond to a collection of information unless it contains a valid OMB control number.

Application Data Sheet 37 CFR 1.76	Attorney Docket Number	PMOR0162B
	Application Number	
Title of Invention	METHODS, SYSTEMS, AND COMPUTER PROGRAM PRODUCTS FOR SELECTING A RESOURCE BASED ON A MEASURE OF A PROCESSING COST	

Prior Application Status	Pending		Remove
Application Number	Continuity Type	Prior Application Number	Filing Date (YYYY-MM-DD)
	Continuation in part of	13477402	2012-05-22
Prior Application Status	Patented		Remove

Application Number	Continuity Type	Prior Application Number	Filing Date (YYYY-MM-DD)	Patent Number	Issue Date (YYYY-MM-DD)
13477402	Continuation of	12714454	2010-02-27	8219606	2012-07-10

Additional Domestic Benefit/National Stage Data may be generated within this form by selecting the **Add** button.

Foreign Priority Information:

This section allows for the applicant to claim priority to a foreign application. Providing this information in the application data sheet constitutes the claim for priority as required by 35 U.S.C. 119(b) and 37 CFR 1.55(d). When priority is claimed to a foreign application that is eligible for retrieval under the priority document exchange program (PDX)[i] the information will be used by the Office to automatically attempt retrieval pursuant to 37 CFR 1.55(h)(1) and (2). Under the PDX program, applicant bears the ultimate responsibility for ensuring that a copy of the foreign application is received by the Office from the participating foreign intellectual property office, or a certified copy of the foreign priority application is filed, within the time period specified in 37 CFR 1.55(g)(1).

Remove

Application Number	Country[i]	Filing Date (YYYY-MM-DD)	Access Code[i] (if applicable)

Additional Foreign Priority Data may be generated within this form by selecting the **Add** button.

Statement under 37 CFR 1.55 or 1.78 for AIA (First Inventor to File) Transition Applications

☐ This application (1) claims priority to or the benefit of an application filed before March 16, 2013 and (2) also contains, or contained at any time, a claim to a claimed invention that has an effective filing date on or after March 16, 2013.

Authorization to Permit Access:

☐ Authorization to Permit Access to the Instant Application by the Participating Offices

Under the Paperwork Reduction Act of 1995, no persons are required to respond to a collection of information unless it contains a valid OMB control number.

Application Data Sheet 37 CFR 1.76	Attorney Docket Number	PMOR0162B
	Application Number	
Title of Invention	METHODS, SYSTEMS, AND COMPUTER PROGRAM PRODUCTS FOR SELECTING A RESOURCE BASED ON A MEASURE OF A PROCESSING COST	

If checked, the undersigned hereby grants the USPTO authority to provide the European Patent Office (EPO), the Japan Patent Office (JPO), the Korean Intellectual Property Office (KIPO), the World Intellectual Property Office (WIPO), and any other intellectual property offices in which a foreign application claiming priority to the instant patent application is filed access to the instant patent application. See 37 CFR 1.14(c) and (h). This box should not be checked if the applicant does not wish the EPO, JPO, KIPO, WIPO, or other intellectual property office in which a foreign application claiming priority to the instant patent application is filed to have access to the instant patent application.

In accordance with 37 CFR 1.14(h)(3), access will be provided to a copy of the instant patent application with respect to: 1) the instant patent application-as-filed; 2) any foreign application to which the instant patent application claims priority under 35 U.S.C. 119(a)-(d) if a copy of the foreign application that satisfies the certified copy requirement of 37 CFR 1.55 has been filed in the instant patent application; and 3) any U.S. application-as-filed from which benefit is sought in the instant patent application.

In accordance with 37 CFR 1.14(c), access may be provided to information concerning the date o f filing this Authorization.

Applicant Information:

Providing assignment information in this section does not substitute for compliance with any requirement of part 3 of Title 37 of CFR to have an assignment recorded by the Office.

Applicant 1

If the applicant is the inventor (or the remaining joint inventor or inventors under 37 CFR 1.45), this section should not be completed. The information to be provided in this section is the name and address of the legal representative who is the applicant under 37 CFR 1.43; or the name and address of the assignee, person to whom the inventor is under an obligation to assign the invention, or person who otherwise shows sufficient proprietary interest in the matter who is the applicant under 37 CFR 1.46. If the applicant is an applicant under 37 CFR 1.46 (assignee, person to whom the inventor is obligated to assign, or person who otherwise shows sufficient proprietary interest) together with one or more joint inventors, then the joint inventor or inventors who are also the applicant should be identified in this section.

Clear

◉ Assignee	○ Legal Representative under 35 U.S.C. 117	○ Joint Inventor
○ Person to whom the inventor is obligated to assign.	○ Person who shows sufficient proprietary interest	

If applicant is the legal representative, indicate the authority to file the patent application, the inventor is:

Name of the Deceased or Legally Incapacitated Inventor :

If the Applicant is an Organization check here. ☒

Organization Name	SITTING MAN, LLC		
Mailing Address Information For Applicant:			
Address 1	712 Latta St.		
Address 2			
City	Raleigh	**State/Province**	NC
Country	US	Postal Code	27607
Phone Number		Fax Number	

Under the Paperwork Reduction Act of 1995, no persons are required to respond to a collection of information unless it contains a valid OMB control number.

Application Data Sheet 37 CFR 1.76	Attorney Docket Number	PMOR0162B
	Application Number	
Title of Invention	METHODS, SYSTEMS, AND COMPUTER PROGRAM PRODUCTS FOR SELECTING A RESOURCE BASED ON A MEASURE OF A PROCESSING COST	

Email Address	

Additional Applicant Data may be generated within this form by selecting the Add button.

Non-Applicant Assignee Information:

Providing assignment information in this section does not subsitute for compliance with any requirement of part 3 of Title 37 of CFR to have an assignment recorded by the Office.

Assignee 1

Complete this section only if non-applicant assignee information is desired to be included on the patent application publication in accordance with 37 CFR 1.215(b). Do not include in this section an applicant under 37 CFR 1.46 (assignee, person to whom the inventor is obligated to assign, or person who otherwise shows sufficient proprietary interest), as the patent application publication will include the name of the applicant(s).

If the Assignee is an Organization check here. ☒

Organization Name	SITTING MAN, LLC

Mailing Address Information For Non-Applicant Assignee:

Address 1	712 Latta St.		
Address 2			
City	Raleigh	**State/Province**	NC
Country	US	Postal Code	27607
Phone Number		Fax Number	
Email Address			

Additional Assignee Data may be generated within this form by selecting the Add button.

Signature:

NOTE: This form must be signed in accordance with 37 CFR 1.33. See 37 CFR 1.4 for signature requirements and certifications.

Signature	/Patrick E. Caldwell/			Date (YYYY-MM-DD)	2015-03-24
First Name	Patrick	Last Name	Caldwell	Registration Number	44580

Additional Signature may be generated within this form by selecting the Add button.

Under the Paperwork Reduction Act of 1995, no persons are required to respond to a collection of information unless it contains a valid OMB control number.

Application Data Sheet 37 CFR 1.76	Attorney Docket Number	PMOR0162B
	Application Number	
Title of Invention	METHODS, SYSTEMS, AND COMPUTER PROGRAM PRODUCTS FOR SELECTING A RESOURCE BASED ON A MEASURE OF A PROCESSING COST	

This collection of information is required by 37 CFR 1.76. The information is required to obtain or retain a benefit by the public which is to file (and by the USPTO to process) an application. Confidentiality is governed by 35 U.S.C. 122 and 37 CFR 1.14. This collection is estimated to take 23 minutes to complete, including gathering, preparing, and submitting the completed application data sheet form to the USPTO. Time will vary depending upon the individual case. Any comments on the amount of time you require to complete this form and/or suggestions for reducing this burden, should be sent to the Chief Information Officer, U.S. Patent and Trademark Office, U.S. Department of Commerce, P.O. Box 1450, Alexandria, VA 22313-1450. DO NOT SEND FEES OR COMPLETED FORMS TO THIS ADDRESS. **SEND TO: Commissioner for Patents, P.O. Box 1450, Alexandria, VA 22313-1450.**

Privacy Act Statement

The Privacy Act of 1974 (P.L. 93-579) requires that you be given certain information in connection with your submission of the attached form related to a patent application or patent. Accordingly, pursuant to the requirements of the Act, please be advised that: (1) the general authority for the collection of this information is 35 U.S.C. 2(b)(2); (2) furnishing of the information solicited is voluntary; and (3) the principal purpose for which the information is used by the U.S. Patent and Trademark Office is to process and/or examine your submission related to a patent application or patent. If you do not furnish the requested information, the U.S. Patent and Trademark Office may not be able to process and/or examine your submission, which may result in termination of proceedings or abandonment of the application or expiration of the patent.

The information provided by you in this form will be subject to the following routine uses:

1. The information on this form will be treated confidentially to the extent allowed under the Freedom of Information Act (5 U.S.C. 552) and the Privacy Act (5 U.S.C. 552a). Records from this system of records may be disclosed to the Department of Justice to determine whether the Freedom of Information Act requires disclosure of these records.

2. A record from this system of records may be disclosed, as a routine use, in the course of presenting evidence to a court, magistrate, or administrative tribunal, including disclosures to opposing counsel in the course of settlement negotiations.

3. A record in this system of records may be disclosed, as a routine use, to a Member of Congress submitting a request involving an individual, to whom the record pertains, when the individual has requested assistance from the Member with respect to the subject matter of the record.

4. A record in this system of records may be disclosed, as a routine use, to a contractor of the Agency having need for the information in order to perform a contract. Recipients of information shall be required to comply with the requirements of the Privacy Act of 1974, as amended, pursuant to 5 U.S.C. 552a(m).

5. A record related to an International Application filed under the Patent Cooperation Treaty in this system of records may be disclosed, as a routine use, to the International Bureau of the World Intellectual Property Organization, pursuant to the Patent Co o p eration Treaty.

6. A record in this system of records may be disclosed, as a routine use, to another federal agency for purposes of National Security review (35 U.S.C. 181) and for review pursuant to the Atomic Energy Act (42 U.S.C. 218(c)).

7. A record from this system of records may be disclosed, as a routine use, to the Administrator, General Services, or his/her designee, during an inspection of records conducted by GSA as part of that agency's responsibility to recommend improvements in records management practices and programs, under authority of 44 U.S.C. 2904 and 2906. Such disclosure shall be made in accordance with the GSA regulations governing inspection of records for this purpose, and any other relevant (i.e., GSA or Commerce) directive. Such disclosure shall not be used to make determinations about individuals.

8. A record from this system of records may be disclosed, as a routine use, to the public after either publication of the application pursuant to 35 U.S.C. 122(b) or issuance of a patent pursuant to 35 U.S.C. 151. Further, a record may be disclosed, subject to the limitations of 37 CFR 1.14, as a routine use, to the public if the record was filed in an application which became abandoned or in which the proceedings were terminated and which application is referenced by either a published application, an application open to public inspections or an issued patent.

9. A record from this system of records may be disclosed, as a routine use, to a Federal, State, or local law enforcement agency, if the USPTO becomes aware of a violation or potential violation of law or regulation.

PTO/AIA/01 (06-12)
Approved for use through 01/31/2014. OMB 0651-0032
U.S. Patent and Trademark Office; U.S. DEPARTMENT OF COMMERCE
Under the Paperwork Reduction Act of 1995, no persons are required to respond to a collection of information unless it displays a valid OMB control number.

DECLARATION (37 CFR 1.63) FOR UTILITY OR DESIGN APPLICATION USING AN APPLICATION DATA SHEET (37 CFR 1.76)

Title of Invention	METHODS, SYSTEMS, AND COMPUTER PROGRAM PRODUCTS FOR SELECTING A RESOURCE BASED ON A MEASURE OF A PROCESSING COST

As the below named inventor, I hereby declare that:

This declaration is directed to:

- [x] The attached application, or
- [ ] United States application or PCT international application number _____

filed on _____.

The above-identified application was made or authorized to be made by me.

I believe that I am the original inventor or an original joint inventor of a claimed invention in the application.

I hereby acknowledge that any willful false statement made in this declaration is punishable under 18 U.S.C. 1001 by fine or imprisonment of not more than five (5) years, or both.

WARNING:

Petitioner/applicant is cautioned to avoid submitting personal information in documents filed in a patent application that may contribute to identity theft. Personal information such as social security numbers, bank account numbers, or credit card numbers (other than a check or credit card authorization form PTO-2038 submitted for payment purposes) is never required by the USPTO to support a petition or an application. If this type of personal information is included in documents submitted to the USPTO, petitioners/applicants should consider redacting such personal information from the documents before submitting them to the USPTO. Petitioner/applicant is advised that the record of a patent application is available to the public after publication of the application (unless a non-publication request in compliance with 37 CFR 1.213(a) is made in the application) or issuance of a patent. Furthermore, the record from an abandoned application may also be available to the public if the application is referenced in a published application or an issued patent (see 37 CFR 1.14). Checks and credit card authorization forms PTO-2038 submitted for payment purposes are not retained in the application file and therefore are not publicly available.

LEGAL NAME OF INVENTOR

Inventor: Robert Paul Morris Date (Optional) :_____

Signature: /Robert Paul Morris/

Note: An application data sheet (PTO/SB/14 or equivalent), including naming the entire inventive entity, must accompany this form **or must have been previously filed**. Use an additional PTO/AIA/01 form for each additional inventor.

This collection of information is required by 35 U.S.C. 115 and 37 CFR 1.63. The information is required to obtain or retain a benefit by the public which is to file (and by the USPTO to process) an application. Confidentiality is governed by 35 U.S.C. 122 and 37 CFR 1.11 and 1.14. This collection is estimated to take 1 minute to complete, including gathering, preparing, and submitting the completed application form to the USPTO. Time will vary depending upon the individual case. Any comments on the amount of time you require to complete this form and/or suggestions for reducing this burden, should be sent to the Chief Information Officer, U.S. Patent and Trademark Office, U.S. Department of Commerce, P.O. Box 1450, Alexandria, VA 22313-1450. DO NOT SEND FEES OR COMPLETED FORMS TO THIS ADDRESS. **SEND TO: Commissioner for Patents, P.O. Box 1450, Alexandria, VA 22313-1450.**

If you need assistance in completing the form, call 1-800-PTO-9199 and select option 2.

Privacy Act Statement

The **Privacy Act of 1974 (P.L. 93-579)** requires that you be given certain information in connection with your submission of the attached form related to a patent application or patent. Accordingly, pursuant to the requirements of the Act, please be advised that: (1) the general authority for the collection of this information is 35 U.S.C. 2(b)(2); (2) furnishing of the information solicited is voluntary; and (3) the principal purpose for which the information is used by the U.S. Patent and Trademark Office is to process and/or examine your submission related to a patent application or patent. If you do not furnish the requested information, the U.S. Patent and Trademark Office may not be able to process and/or examine your submission, which may result in termination of proceedings or abandonment of the application or expiration of the patent.

The information provided by you in this form will be subject to the following routine uses:

1. The information on this form will be treated confidentially to the extent allowed under the Freedom of Information Act (5 U.S.C. 552) and the Privacy Act (5 U.S.C 552a). Records from this system of records may be disclosed to the Department of Justice to determine whether disclosure of these records is required by the Freedom of Information Act.
2. A record from this system of records may be disclosed, as a routine use, in the course of presenting evidence to a court, magistrate, or administrative tribunal, including disclosures to opposing counsel in the course of settlement negotiations.
3. A record in this system of records may be disclosed, as a routine use, to a Member of Congress submitting a request involving an individual, to whom the record pertains, when the individual has requested assistance from the Member with respect to the subject matter of the record.
4. A record in this system of records may be disclosed, as a routine use, to a contractor of the Agency having need for the information in order to perform a contract. Recipients of information shall be required to comply with the requirements of the Privacy Act of 1974, as amended, pursuant to 5 U.S.C. 552a(m).
5. A record related to an International Application filed under the Patent Cooperation Treaty in this system of records may be disclosed, as a routine use, to the International Bureau of the World Intellectual Property Organization, pursuant to the Patent Cooperation Treaty.
6. A record in this system of records may be disclosed, as a routine use, to another federal agency for purposes of National Security review (35 U.S.C. 181) and for review pursuant to the Atomic Energy Act (42 U.S.C. 218(c)).
7. A record from this system of records may be disclosed, as a routine use, to the Administrator, General Services, or his/her designee, during an inspection of records conducted by GSA as part of that agency's responsibility to recommend improvements in records management practices and programs, under authority of 44 U.S.C. 2904 and 2906. Such disclosure shall be made in accordance with the GSA regulations governing inspection of records for this purpose, and any other relevant (*i.e.*, GSA or Commerce) directive. Such disclosure shall not be used to make determinations about individuals.
8. A record from this system of records may be disclosed, as a routine use, to the public after either publication of the application pursuant to 35 U.S.C. 122(b) or issuance of a patent pursuant to 35 U.S.C. 151. Further, a record may be disclosed, subject to the limitations of 37 CFR 1.14, as a routine use, to the public if the record was filed in an application which became abandoned or in which the proceedings were terminated and which application is referenced by either a published application, an application open to public inspection or an issued patent.
9. A record from this system of records may be disclosed, as a routine use, to a Federal, State, or local law enforcement agency, if the USPTO becomes aware of a violation or potential violation of law or regulation.

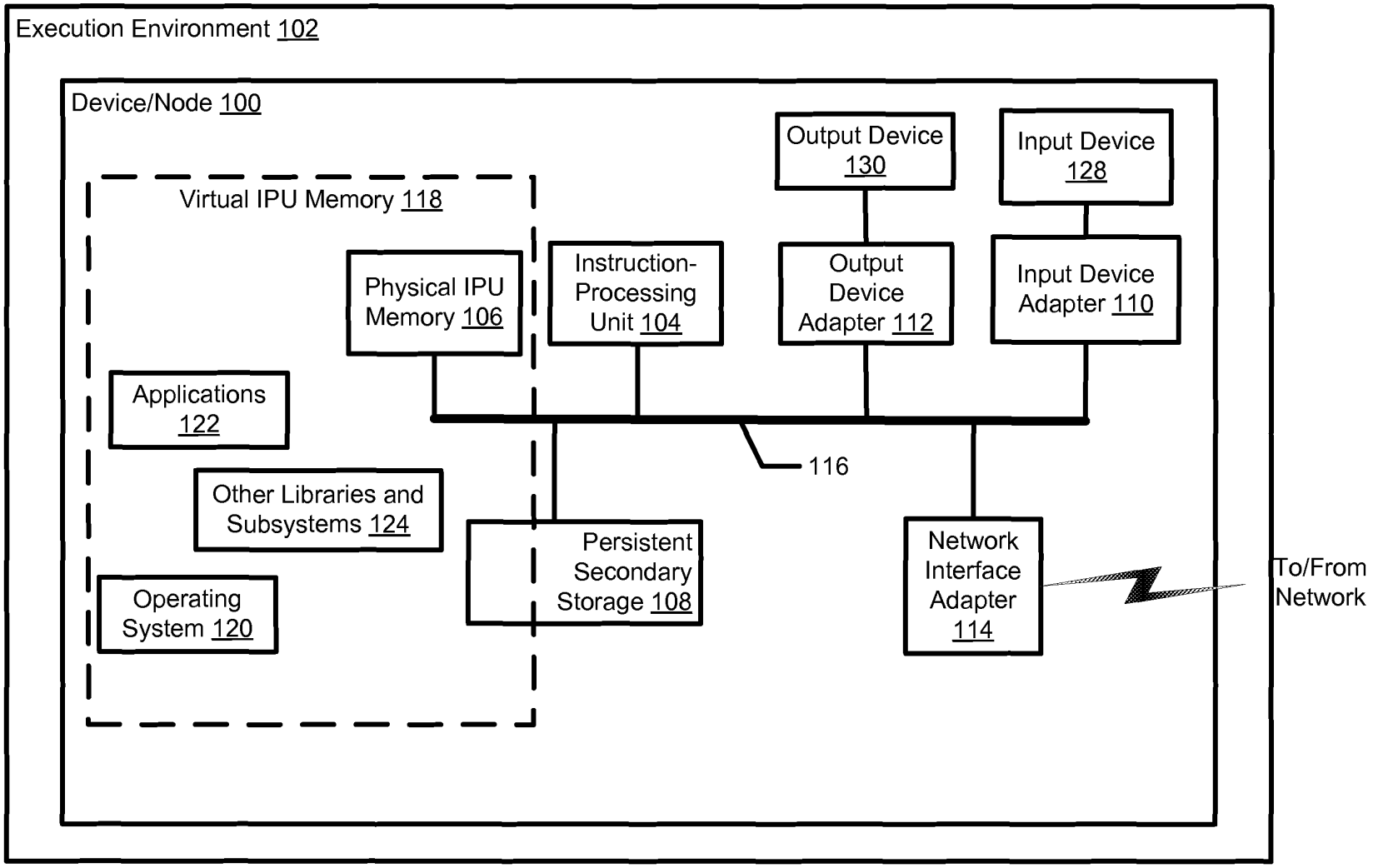
Execution Environment 102
Device/Node 100
Virtual IPU Memory 118
Physical IPU Memory 106
Applications 122
Other Libraries and Subsystems 124
Operating System 120
Instruction-Processing Unit 104
Output Device 130
Input Device 128
Output Device Adapter 112
Input Device Adapter 110
116
Persistent Secondary Storage 108
Network Interface Adapter 114
To/From Network

Fig. 1

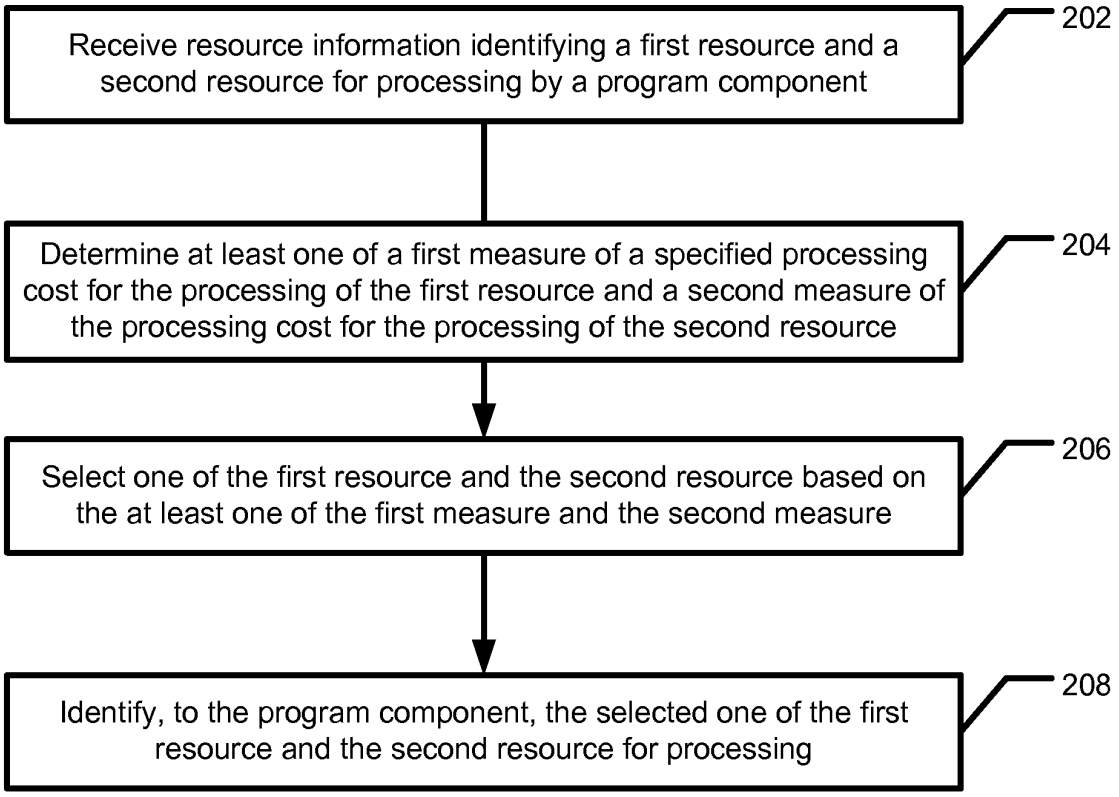
Receive resource information identifying a first resource and a second resource for processing by a program component
202
Determine at least one of a first measure of a specified processing cost for the processing of the first resource and a second measure of the processing cost for the processing of the second resource
204
Select one of the first resource and the second resource based on the at least one of the first measure and the second measure
206
Identify, to the program component, the selected one of the first resource and the second resource for processing
208

Fig. 2

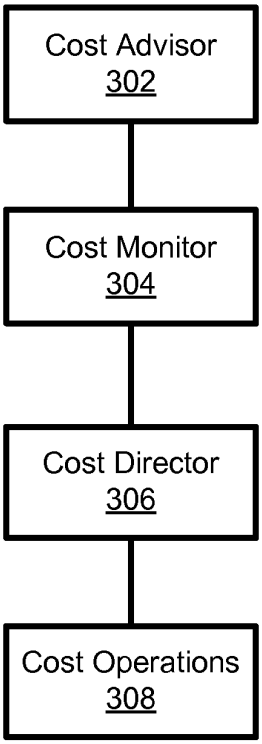
Cost Advisor
302
Cost Monitor
304
Cost Director
306
Cost Operations
308

Fig. 3

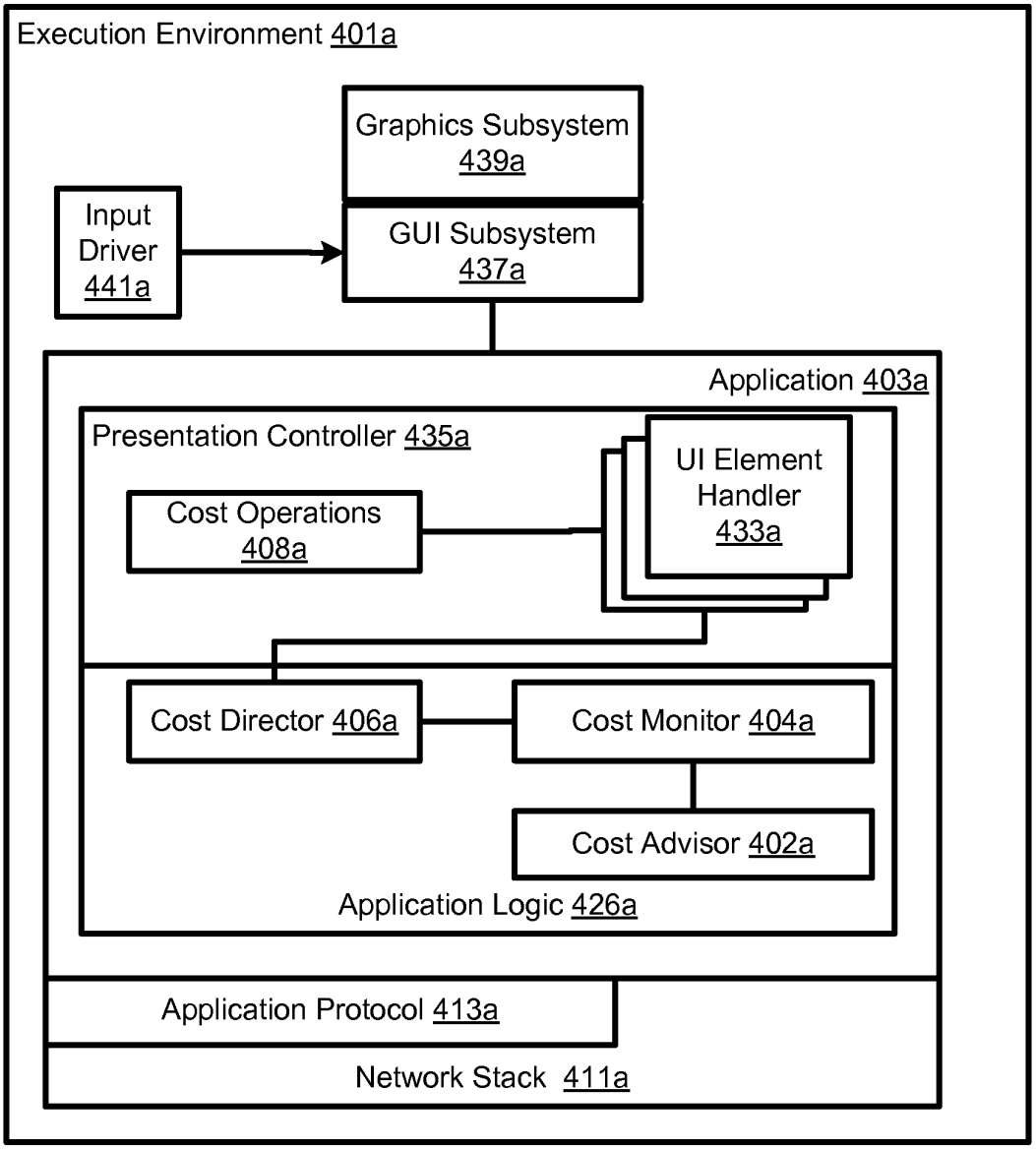
Execution Environment 401a
Graphics Subsystem 439a
Input Driver 441a
GUI Subsystem 437a
Application 403a
Presentation Controller 435a
UI Element Handler 433a
Cost Operations 408a
Cost Director 406a
Cost Monitor 404a
Cost Advisor 402a
Application Logic 426a
Application Protocol 413a
Network Stack 411a

Fig. 4a

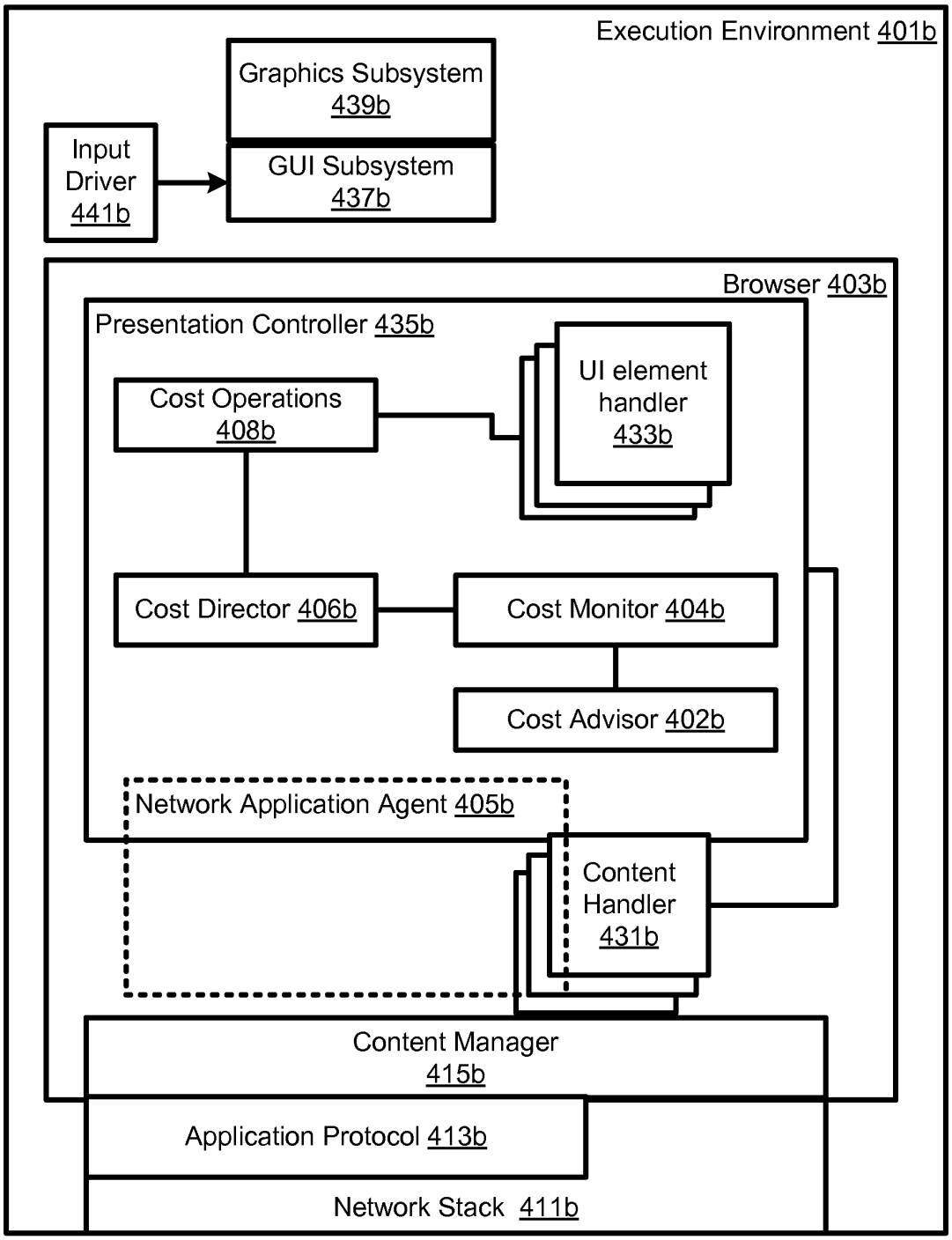
Execution Environment 401b
Graphics Subsystem 439b
Input Driver 441b
GUI Subsystem 437b
Browser 403b
Presentation Controller 435b
UI element handler 433b
Cost Operations 408b
Cost Director 406b
Cost Monitor 404b
Cost Advisor 402b
Network Application Agent 405b
Content Handler 431b
Content Manager 415b
Application Protocol 413b
Network Stack 411b

Fig. 4b

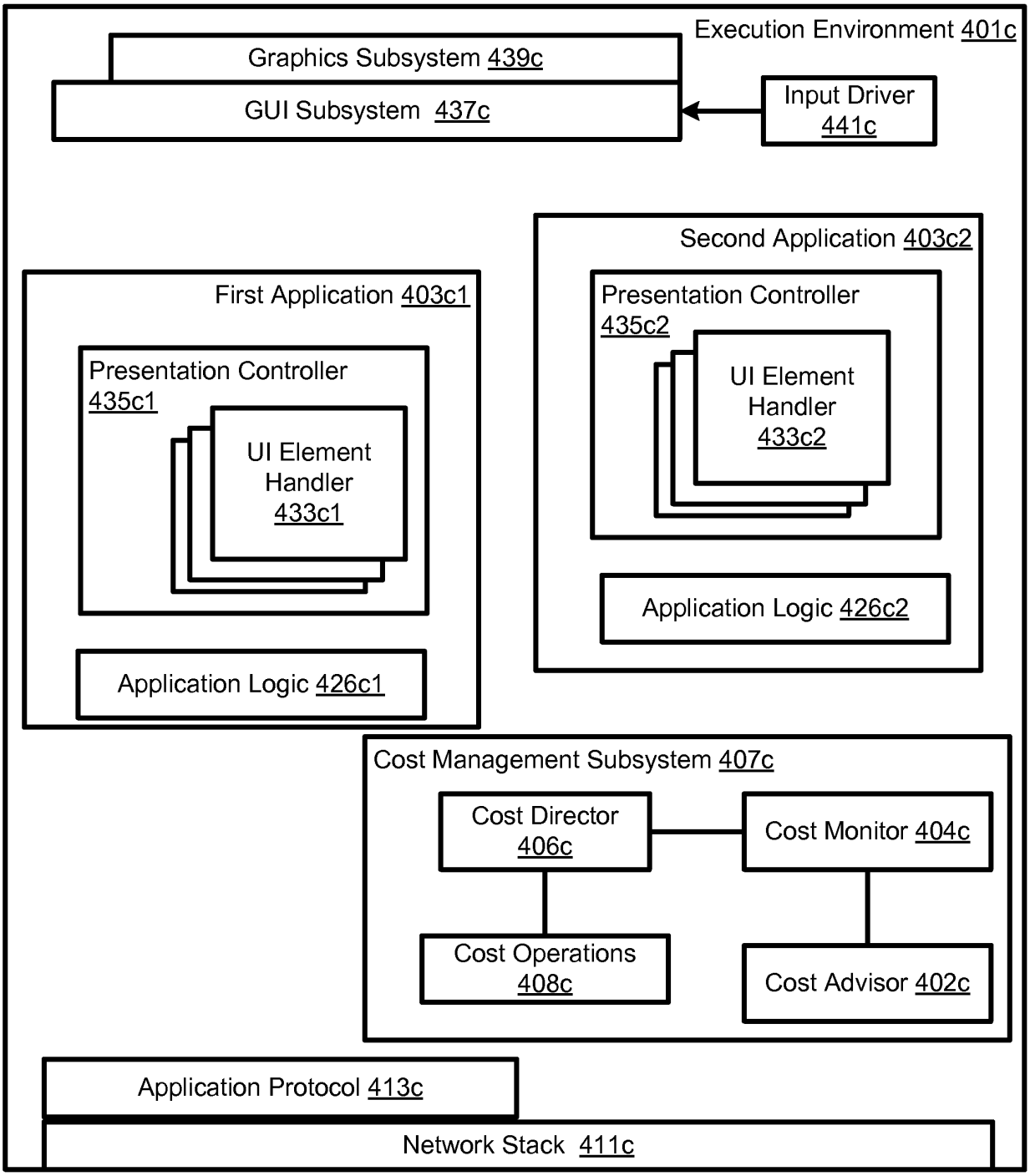
Execution Environment 401c
Graphics Subsystem 439c
GUI Subsystem 437c
Input Driver 441c
Second Application 403c2
Presentation Controller 435c2
UI Element Handler 433c2
Application Logic 426c2
First Application 403c1
Presentation Controller 435c1
UI Element Handler 433c1
Application Logic 426c1
Cost Management Subsystem 407c
Cost Director 406c
Cost Monitor 404c
Cost Operations 408c
Cost Advisor 402c
Application Protocol 413c
Network Stack 411c

Fig. 4c

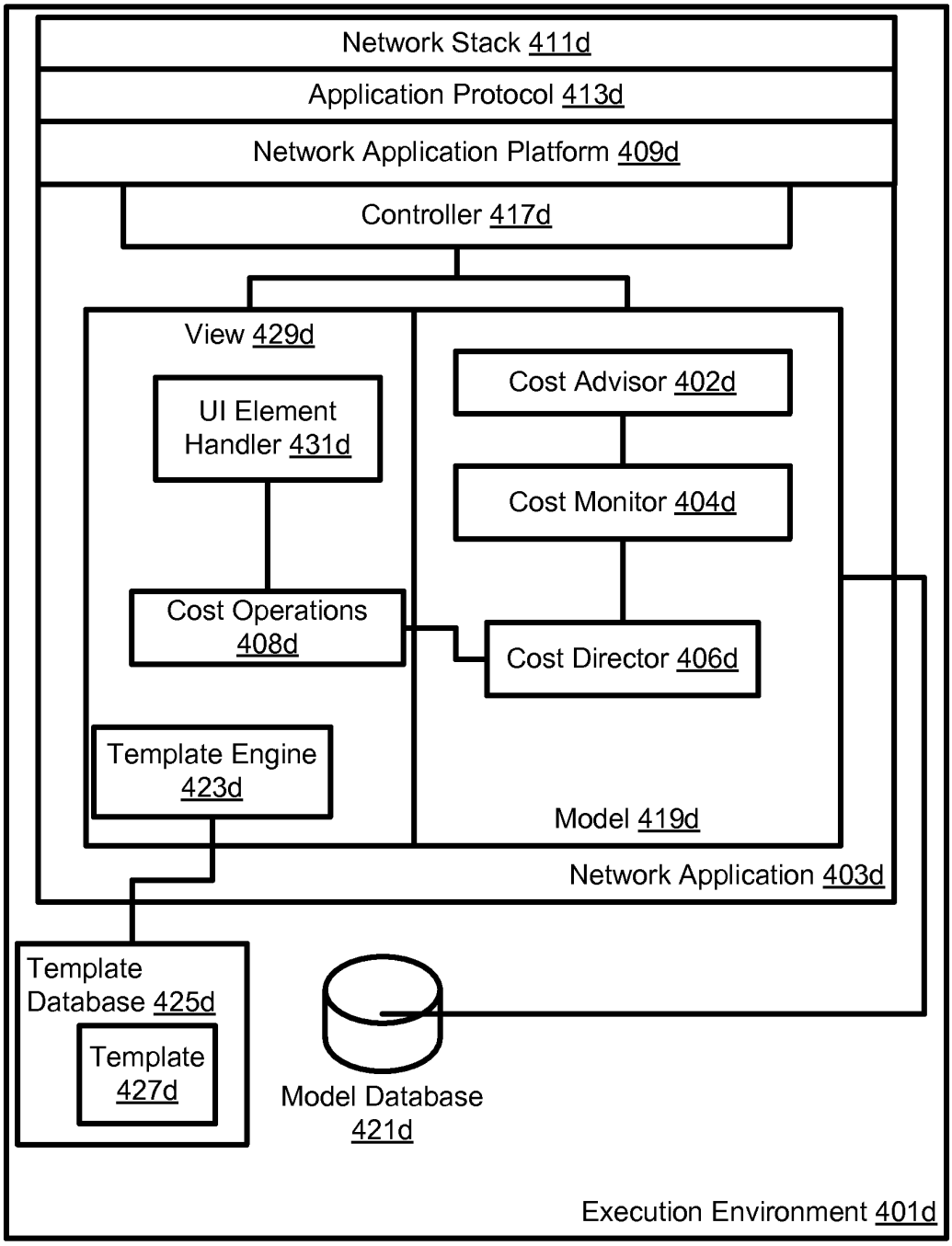
Network Stack 411d
Application Protocol 413d
Network Application Platform 409d
Controller 417d
View 429d
UI Element Handler 431d
Cost Operations 408d
Template Engine 423d
Cost Advisor 402d
Cost Monitor 404d
Cost Director 406d
Model 419d
Network Application 403d
Template Database 425d
Template 427d
Model Database 421d
Execution Environment 401d

Fig. 4d

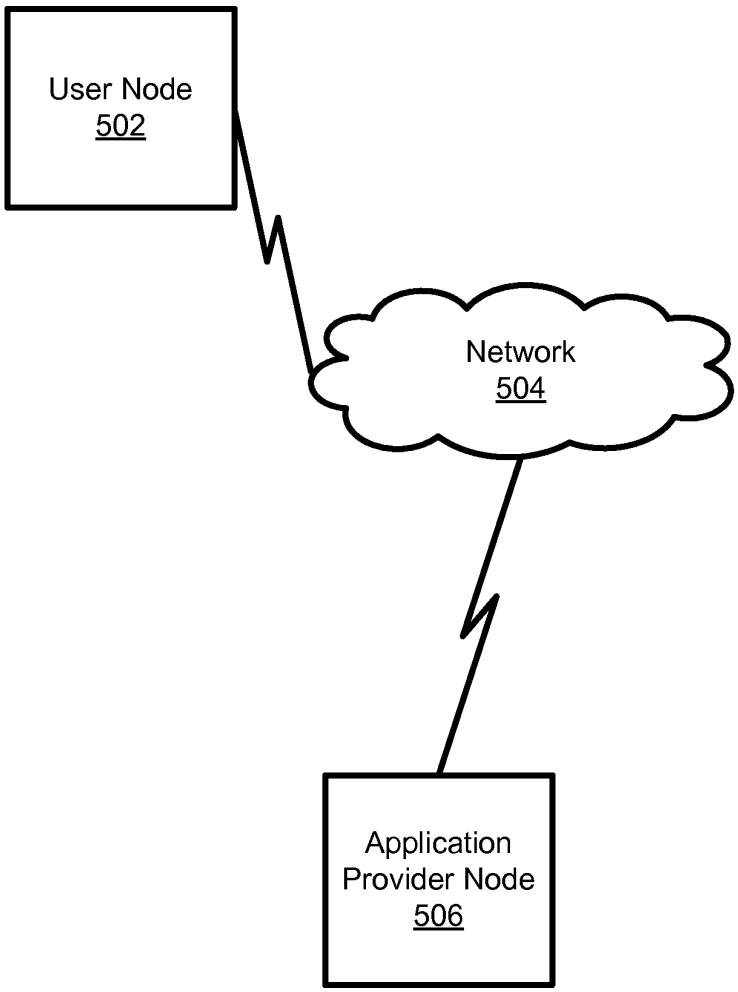

Fig. 5

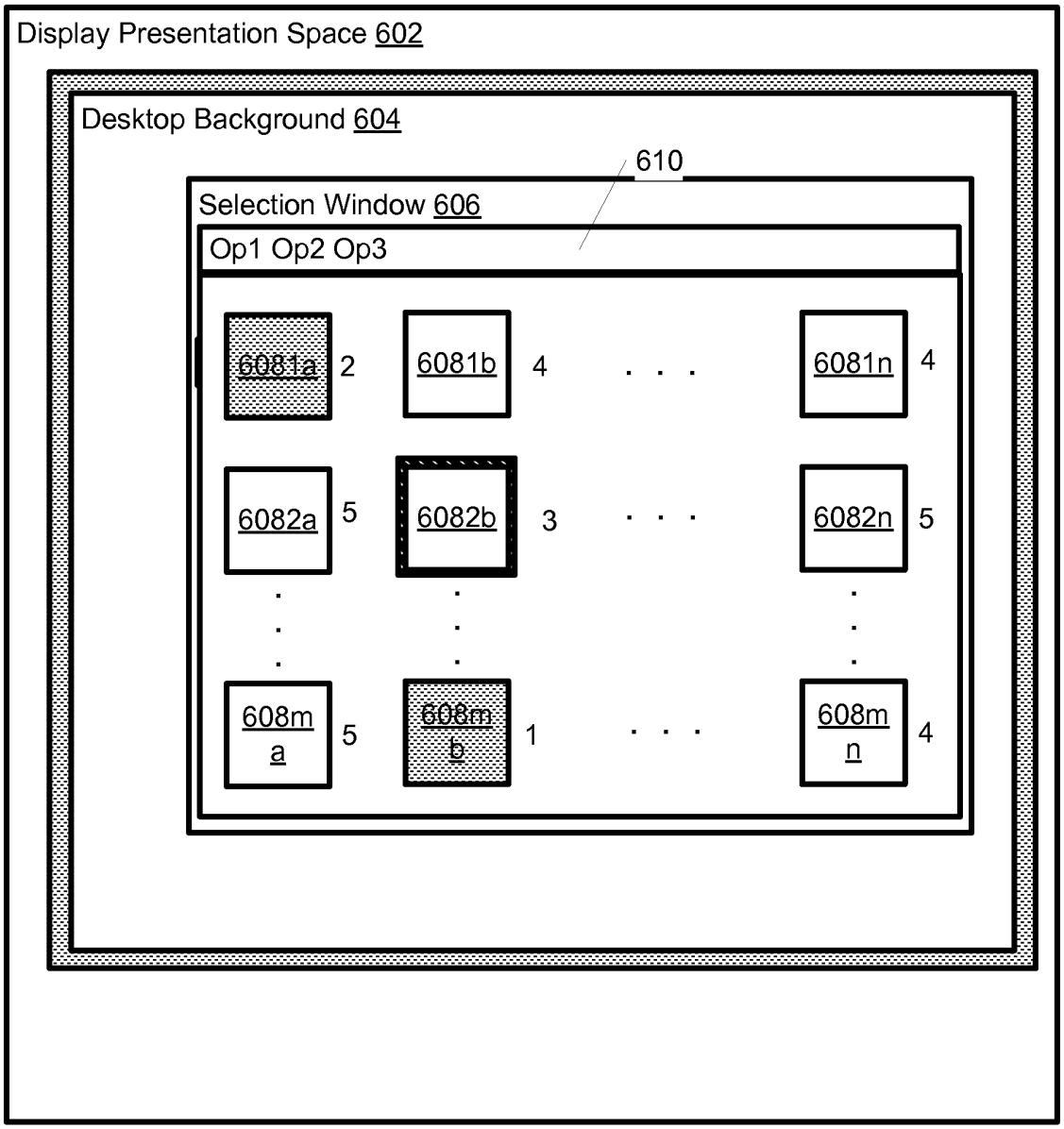
Display Presentation Space 602
Desktop Background 604
610
Selection Window 606
Op1 Op2 Op3
6081a
2
6081b
4
6081n
4
6082a
5
6082b
3
6082n
5
608m a
5
608m b
1
608m n
4

Fig. 6

CERTIFICATION AND REQUEST FOR EXTENDED MISSING PARTS PILOT PROGRAM (Page 1 of 2)

First Named Inventor:	Robert Paul Morris	Nonprovisional Application Number (if known):	62137173
Title of Invention:	METHODS, SYSTEMS, AND COMPUTER PROGRAM PRODUCTS FOR SELECTING A RESOURCE BASED ON A MEASURE OF A PROCESSING COST		

APPLICANT HEREBY CERTIFIES THE FOLLOWING AND REQUESTS TO PARTICIPATE IN THE EXTENDED MISSING PARTS PILOT PROGRAM FOR THE ABOVE-IDENTIFIED APPLICATION.

1. This certification and request is being filed with the nonprovisional application. The application is an original nonprovisional utility or plant application filed under 35 U.S.C. 111(a) within the duration of the pilot program. The following are excluded from the program: design applications, provisional applications, national stage applications, PCT international applications, reissue applications, and reexamination proceedings.

2. The application directly claims the benefit of a provisional application filed within the previous 12 months. Applicant is including the benefit claim to the provisional application in the first sentence of the specification or an application data sheet (see 37 CFR 1.78).

3. A nonpublication request is not included.

4. By filing this certification and request, applicant also acknowledges the following:
   - A nonprovisional application must have a specification including at least one claim and a drawing(s) if necessary for an understanding of the invention to be entitled to a filing date (see 35 U.S.C. 111(a)) and thus be eligible for the pilot program.
   - The nonprovisional application as originally filed must have a complete disclosure that complies with the enablement and written description requirements of 35 U.S.C. 112, first paragraph, which is sufficient to support the claims submitted on filing and any claims submitted later during prosecution. New matter cannot be added to an application after the filing date of the application. See 35 U.S.C. 132(a).
   - Provisional rights to a reasonable royalty under 35 U.S.C. 154(d) may only be available if the claims that are published in the patent application publication are substantially identical to the patented claims that are infringed (if a patent is granted). Therefore, applicant may wish to consider the benefits of submitting a complete set of claims on filing of the nonprovisional application.
   - Any foreign application (or international application) must still be filed within 12 months of the provisional application's filing date if applicant wishes to rely on the provisional application in the foreign application (or international application).
   - Any patent term adjustment (PTA) accrued by applicant based on certain administrative delays by the USPTO is offset by a reduction for failing to reply to a notice by the USPTO within three months. See 37 CFR 1.704(b). Thus, if applicant replies to a notice to file missing parts more than three months after the mailing date of the notice, the additional time that applicant takes to reply to the notice will be treated as an offset to any positive PTA accrued by the applicant. In no event will a reduction under 37 CFR 1.704(b) reduce the 20-year patent term (if a patent is granted). For more information on patent term, see MPEP § 2701.
   - A general authorization to charge fees, or a specific authorization to charge the search, examination, and/or excess claims fees to a deposit account, should not be submitted if participation in the pilot program is desired.
   - Fees are subject to change and the fees that are due are the fees in effect at the time of fee payment. Therefore, if the search fee, examination fee, excess claims fees, and/or the surcharge (or any other fees) have increased after the mailing of a Notice to File Missing Parts, applicant will be required to pay the increased fee amounts. Applicants should consult the current fee schedule on the USPTO Web site before paying any fees that are due.

CERTIFICATION AND REQUEST FOR EXTENDED MISSING PARTS PILOT PROGRAM (Page 2 of 2)

5. Applicant acknowledges that if the application is not in condition for publication, applicant will be required to place the application in condition for publication within two months (extendable under 37 CFR 1.136) of notification.

   To be in condition for publication (37 CFR 1.211(c)), the application must contain the following:
   a. Basic filing fee;
   b. Executed oath or declaration in compliance 37 CFR 1.63;
   c. Application size fee (if required);
   d. Specification in compliance with 37 CFR 1.52;
   e. Abstract in compliance with 37 CFR 1.72(b);
   f. Drawings in compliance with 37 CFR 1.84 (if required);
   g. Sequence listing in compliance with 37 CFR 1.821-1.825 (if applicable); and
   h. English language translation and statement in compliance with 37 CFR 1.52(d) (if required).

Signature /Patrick E. Caldwell/	Date 2015-03-24
Name (Print/Typed) Patrick E. Caldwell	Practitioner Registration Number 44,580

***Note**: Signatures of all the inventors or assignees of record of the entire interest or their representative(s) are required in accordance with 37 CFR 1.33 and 11.18. Please see 37 CFR 1.4(d) for the form of the signature. If necessary, submit multiple forms for more than one signature, see below*.*

☑ *Total of 1 forms are submitted.

Privacy Act Statement

The **Privacy Act of 1974 (P.L. 93-579)** requires that you be given certain information in connection with your submission of the attached form related to a patent application or patent. Accordingly, pursuant to the requirements of the Act, please be advised that: (1) the general authority for the collection of this information is 35 U.S.C. 2(b)(2); (2) furnishing of the information solicited is voluntary; and (3) the principal purpose for which the information is used by the U.S. Patent and Trademark Office is to process and/or examine your submission related to a patent application or patent. If you do not furnish the requested information, the U.S. Patent and Trademark Office may not be able to process and/or examine your submission, which may result in termination of proceedings or abandonment of the application or expiration of the patent.

The information provided by you in this form will be subject to the following routine uses:

1. The information on this form will be treated confidentially to the extent allowed under the Freedom of Information Act (5 U.S.C. 552) and the Privacy Act (5 U.S.C 552a). Records from this system of records may be disclosed to the Department of Justice to determine whether disclosure of these records is required by the Freedom of Information Act.
2. A record from this system of records may be disclosed, as a routine use, in the course of presenting evidence to a court, magistrate, or administrative tribunal, including disclosures to opposing counsel in the course of settlement negotiations.
3. A record in this system of records may be disclosed, as a routine use, to a Member of Congress submitting a request involving an individual, to whom the record pertains, when the individual has requested assistance from the Member with respect to the subject matter of the record.
4. A record in this system of records may be disclosed, as a routine use, to a contractor of the Agency having need for the information in order to perform a contract. Recipients of information shall be required to comply with the requirements of the Privacy Act of 1974, as amended, pursuant to 5 U.S.C. 552a(m).
5. A record related to an International Application filed under the Patent Cooperation Treaty in this system of records may be disclosed, as a routine use, to the International Bureau of the World Intellectual Property Organization, pursuant to the Patent Cooperation Treaty.
6. A record in this system of records may be disclosed, as a routine use, to another federal agency for purposes of National Security review (35 U.S.C. 181) and for review pursuant to the Atomic Energy Act (42 U.S.C. 218(c)).
7. A record from this system of records may be disclosed, as a routine use, to the Administrator, General Services, or his/her designee, during an inspection of records conducted by GSA as part of that agency's responsibility to recommend improvements in records management practices and programs, under authority of 44 U.S.C. 2904 and 2906. Such disclosure shall be made in accordance with the GSA regulations governing inspection of records for this purpose, and any other relevant (*i.e.*, GSA or Commerce) directive. Such disclosure shall not be used to make determinations about individuals.
8. A record from this system of records may be disclosed, as a routine use, to the public after either publication of the application pursuant to 35 U.S.C. 122(b) or issuance of a patent pursuant to 35 U.S.C. 151. Further, a record may be disclosed, subject to the limitations of 37 CFR 1.14, as a routine use, to the public if the record was filed in an application which became abandoned or in which the proceedings were terminated and which application is referenced by either a published application, an application open to public inspection or an issued patent.
9. A record from this system of records may be disclosed, as a routine use, to a Federal, State, or local law enforcement agency, if the USPTO becomes aware of a violation or potential violation of law or regulation.