UNITED STATES PATENT AND TRADEMARK OFFICE

UNITED STATES DEPARTMENT OF COMMERCE
United States Patent and Trademark Office
Address: COMMISSIONER FOR PATENTS
P.O. Box 1450
Alexandria, Virginia 22313-1450
www.uspto.gov

APPLICATION NO.	FILING DATE	FIRST NAMED INVENTOR	ATTORNEY DOCKET NO.	CONFIRMATION NO.
12/789,538	05/28/2010	Robert Paul Morris	0147-SP	8814

7590 12/16/2013

The Caldwell Firm, LLC
PO Box 59655
Dept. SVIPGP
Dallas, TX 75229

EXAMINER
CONAWAY, JAMES E

ART UNIT	PAPER NUMBER
2454	

NOTIFICATION DATE	DELIVERY MODE
12/16/2013	ELECTRONIC

Notice of Abandonment

This application is abandoned in view of:

1. ☒ The applicant's failure to timely file a proper reply to the Office letter mailed on 10/01/13.
   (a) ☐ A reply was received on _____ (with a Certificate of Mailing or Transmission date _____), which is after the expiration of the period for reply (including a total extension of ____ month(s)) which expired on _____.
   (b) ☒ No reply has been received.
2. ☒ Applicant's failure to timely pay the required issue fee and publication fee, if applicable, within the statutory period of three months from the mailing date of the Notice of Allowance (PTOL-85).
   (a) ☐ The issue fee and publication fee, if applicable, was received on _____ (with a Certificate of Mailing or Transmission date _____), which is after the expiration of the statutory period for payment of the issue fee (and publication fee) set in the Notice of Allowance (PTOL-85).
   (b) ☐ The submitted fee of $_____ is insufficient. A balance of $_____ is due.
   The issue fee required by 37 CFR 1.18 is $_____.
   The publication fee, if required by 37 CFR 1.18(d), is $_____.
   (c) ☒ The issue fee and publication fee, if applicable, has not been received.
3. ☐ Applicant's failure to timely file corrected drawings as required by, and within the three-month period set in, the Notice of Allowability (PTO-37).
   (a) ☐ Proposed corrected drawings were received on _____ (with a Certificate of Mailing or Transmission dated _____), which is after the expiration of the period for reply.
   (b) ☐ No corrected drawing have been received.
4. ☐ Applicant's failure to timely file the inventor's oath or declaration no later than the date on which the issue fee was paid as required by the Notice Requiring Inventor's Oath or Declaration (PTO-2306).
   (a) ☐ An inventor's oath or declaration was received on _____ (with a Certificate of Mailing or Transmission date _____), which is after the date on which the issue fee was paid.
   (b) ☐ While an oath or declaration (or substitute statement) for one or more inventors was received, an oath or declaration (or substitute statement) for at least one other inventor has not been received.
   (c) ☐ No inventor's oath or declaration has been received.
5. ☐ Drawings received on _____ were disapproved by examiner. See examiner's response dated _____.
6. ☐ Corrected drawings were received on _____ , which is after the expiration of the one-month period for reply set in examiner's response dated _____.
7. ☐ No corrected drawings have been received in reply to one-month period set in examiner's response dated _____.
8. ☐ The reason(s) below:

Petitions to revive under 37 CFR 1.137(a) or (b), or request to withdraw the holding of abandonment under 37 CFR 1.181, should be promptly filed to minimize any negative effects on patent term.

Brandi Tyler for
(571)-272-4200 or 1(888)-786-0101
Patent Publication Branch
Office of Data Management

FORM PTO-ABN0 (Rev. 06/09)

GOOGLE EXHIBIT 1072

PATENT ASSIGNMENT COVER SHEET

Electronic Version v1.1
Stylesheet Version v1.2

EPAS ID: PAT2601318

SUBMISSION TYPE:	NEW ASSIGNMENT
NATURE OF CONVEYANCE:	ASSIGNMENT

CONVEYING PARTY DATA

Name	Execution Date
ROBERT PAUL MORRIS	09/05/2013

RECEIVING PARTY DATA

Name:	SITTING MAN, LLC
Street Address:	712 LATTA ST
City:	RALEIGH
State/Country:	NORTH CAROLINA
Postal Code:	27607

PROPERTY NUMBERS Total: 48

Property Type	Number
Application Number:	12688996
Application Number:	13023883
Patent Number:	8422858
Application Number:	13790082
Application Number:	12696854
Application Number:	12689168
Application Number:	12868767
Application Number:	13045556
Application Number:	12689177
Application Number:	12955993
Patent Number:	8346853
Application Number:	13685739
Application Number:	12714063
Application Number:	12705638
Patent Number:	8219606

CH $1920.00 12688996

Application Number:	13477402
Application Number:	12857836
Application Number:	12857847
Application Number:	12758125
Application Number:	12956008
Application Number:	12788373
Application Number:	13023916
Application Number:	12857857
Application Number:	12758828
Patent Number:	8233482
Application Number:	13531544
Application Number:	12819214
Patent Number:	8331372
Application Number:	13663513
Application Number:	12830385
Application Number:	12789538
Application Number:	12789550
Application Number:	12789568
Application Number:	12819215
Patent Number:	8447819
Application Number:	13867040
Application Number:	12833016
Application Number:	12830389
Application Number:	12830388
Application Number:	12857851
Application Number:	12830392
Application Number:	13025939
Application Number:	13025944
Application Number:	13024444
Application Number:	13023932
Application Number:	13023952
Application Number:	13024466
Application Number:	12788381

CORRESPONDENCE DATA

Fax Number:	
Email:	pcalwell@thecaldwellfirm.com
Correspondence will be sent via US Mail when the email attempt is unsuccessful.	
Correspondent Name:	PATRICK E. CALDWELL, ESQ.
Address Line 1:	PO BOX 59655
Address Line 4:	DALLAS, TEXAS 75229

NAME OF SUBMITTER:	PATRICK E. CALDWELL, ESQ.
Signature:	/Patrick E. Caldwell/
Date:	11/03/2013
	This document serves as an Oath/Declaration (37 CFR 1.63).

Total Attachments: 9
source=Morris-SittingMan_Assignment_vF_9-5-13#page1.tif
source=Morris-SittingMan_Assignment_vF_9-5-13#page2.tif
source=Morris-SittingMan_Assignment_vF_9-5-13#page3.tif
source=Morris-SittingMan_Assignment_vF_9-5-13#page4.tif
source=Morris-SittingMan_Assignment_vF_9-5-13#page5.tif
source=Morris-SittingMan_Assignment_vF_9-5-13#page6.tif
source=Morris-SittingMan_Assignment_vF_9-5-13#page7.tif
source=Morris-SittingMan_Assignment_vF_9-5-13#page8.tif
source=Morris-SittingMan_Assignment_vF_9-5-13#page9.tif

ASSIGNMENT OF PATENT RIGHTS

For valuable consideration, the receipt and sufficiency of which is hereby acknowledged, on this 5th day of September, 2013, Robert Paul Morris of Wake County, Raleigh, North Carolina, a person, ("**Assignor**"), hereby sells, assigns, and transfers to Sitting Man, LLC, a Delaware limited liability company ("**Assignee**"), the full extent of all right, title, and interest in and to any and all of the following (collectively, the "**Rights**"):

1. The patents, provisional patent applications and patent applications listed in the table below (individually and collectively referred to herein as the "**Patents**");
2. All inventions claimed or described in the Patents (collectively, the "**Inventions**");
3. All rights with respect to the Inventions, including all U.S. patents or other governmental grants or issuances that may be granted with respect to the Inventions or from any direct or indirect divisionals, continuations, continuations-in-part, or other patent applications claiming priority rights from the Patents ("**Potential Patents**");
4. All reissues, reexaminations, extensions, registrations, or any and all priority patent application(s) of the Patents or Potential Patents;
5. All non-United States patents, patent applications, and counterparts relating to any or all of the Inventions, the Patents, or Potential Patents, including, without limitation, certificates of invention, utility models, industrial design protection, design patent protection, and other governmental grants or issuances ("**Foreign Rights**"), and including the right to file foreign applications directly in the name of Assignee, its successors and assigns;
6. The right to claim priority rights deriving from the Patents;
7. All causes of action and remedies related to the Patents, the Inventions, Potential Patents, or Foreign Rights (including, without limitation, the right to sue for past, present, or future infringement, misappropriation or violation of rights related to any of the foregoing and the right to collect royalties and other payments under or on account of any of the foregoing); and
8. Any and all other rights and interests arising out of, in connection with, or in relation to, the Patents, the Inventions, Potential Patents, or Foreign Rights.

Patent or Application No.	Filing Date	Title of Patent and First Named Inventor
12/688,996	01-18-2010	METHODS, SYSTEMS, AND COMPUTER PROGRAM PRODUCTS FOR TRAVERSING NODES IN PATH ON A DISPLAY DEVICE Robert Paul Morris
13/023,883	02-09-2011	METHODS, SYSTEMS, AND COMPUTER PROGRAM PRODUCTS FOR DIRECTING ATTENTION OF AN OCCUPANT OF AN AUTOMOTIVE VEHICLE TO A VIEWPORT Robert Paul Morris

Patent or Application No.	Filing Date	Title of Patent and First Named Inventor
8,422,858	01-21-2010	METHODS, SYSTEMS, AND COMPUTER PROGRAM PRODUCTS FOR COORDINATING PLAYING OF MEDIA STREAMS Robert Paul Morris
13/790,082	03-08-2013	METHODS, SYSTEMS, AND COMPUTER PROGRAM PRODUCTS FOR COORDINATING PLAYING OF MEDIA STREAMS Robert Paul Morris
12/696,854	01-29-2010	METHODS, SYSTEMS, AND COMPUTER PROGRAM PRODUCTS FOR CONTROLLING PLAY OF MEDIA STREAMS Robert Paul Morris
12/689,169	01-18-2010	METHODS, SYSTEMS, AND COMPUTER PROGRAM PRODUCTS FOR AUTOMATICALLY SELECTING OBJECTS IN A PLURALITY OF OBJECTS Robert Paul Morris
12/868,767	08-26-2010	METHODS, SYSTEMS, AND COMPUTER PROGRAM PRODUCTS FOR NAVIGATING BETWEEN VISUAL COMPONENTS Robert Paul Morris
13/045,556	03-11-2011	METHODS, SYSTEMS, AND COMPUTER PROGRAM PRODUCTS FOR PROVIDING FEEDBACK TO A USER OF A PORTABLE ELECTRONIC DEVICE IN MOTION Robert Paul Morris
12/689,177	01-18-2010	METHODS, SYSTEMS, AND COMPUTER PROGRAM PRODUCTS FOR AUTOMATING OPERATIONS ON A PLURALITY OF OBJECTS Robert Paul Morris

Patent or Application No.	Filing Date	Title of Patent and First Named Inventor
12/955,993	11-30-2010	METHODS, SYSTEMS, AND COMPUTER PROGRAM PRODUCTS FOR AUTOMATICALLY SCROLLING ITEMS IN A SELECTION CONTROL Robert Paul Morris
8,346,853	05-27-2010	METHODS, SYSTEMS, AND COMPUTER PROGRAM PRODUCTS FOR PROCESSING AN ATTACHED COMMAND RESPONSE Robert Paul Morris
13/685,739	11-27-2012	METHODS, SYSTEMS, AND COMPUTER PROGRAM PRODUCTS FOR PROCESSING AN ATTACHED COMMAND RESPONSE Robert Paul Morris
12/714,063	02-26-2010	METHODS, SYSTEMS, AND COMPUTER PROGRAM PRODUCTS FOR DETECTING AN IDLE TCP CONNECTION Robert Paul Morris
12/705,638	02-15-2010	METHODS, SYSTEMS, AND COMPUTER PROGRAM PRODUCTS FOR DELAYING PRESENTATION OF AN UPDATE TO A USER INTERFACE Robert Paul Morris
8,219,606	02-27-2010	METHODS, SYSTEMS, AND COMPUTER PROGRAM PRODUCTS FOR SHARING INFORMATION FOR DETECTING AN IDLE TCP CONNECTION Robert Paul Morris
13/477,402	05-22-2012	METHODS, SYSTEMS, AND COMPUTER PROGRAM PRODUCTS FOR SHARING INFORMATION FOR DETECTING AN IDLE TCP CONNECTION Robert Paul Morris

Patent or Application No.	Filing Date	Title of Patent and First Named Inventor
12/857,836	08-17-2010	METHODS, SYSTEMS, AND COMPUTER PROGRAM PRODUCTS FOR MAINTAINING A RESOURCE BASED ON A COST OF ENERGY Robert Paul Morris
12/857,847	08-17-2010	METHODS, SYSTEMS, AND COMPUTER PROGRAM PRODUCTS FOR PRESENTING AN INDICATION OF A COST OF PROCESSING A RESOURCE Robert Paul Morris
12/758,125	04-12-2010	METHODS, SYSTEMS, AND COMPUTER PROGRAM PRODUCTS FOR MANAGING AN IDLE COMPUTING COMPONENT Robert Paul Morris
12/956,008	11-30-2010	METHODS, SYSTEMS, AND COMPUTER PROGRAM PRODUCTS FOR BINDING ATTRIBUTES BETWEEN VISUAL COMPONENTS Robert Paul Morris
12/788,373	05-27-2010	METHODS, SYSTEMS, AND COMPUTER PROGRAM PRODUCTS FOR PREVENTING PROCESSING OF AN HTTP RESPONSE Robert Paul Morris
13/023,916	02-09-2011	METHODS, SYSTEMS, AND COMPUTER PROGRAM PRODUCTS FOR DIRECTING ATTENTION TO A SEQUENCE OF VIEWPORTS OF AN AUTOMOTIVE VEHICLE Robert Paul Morris
12/857,857	08-17-2010	METHODS, SYSTEMS, AND COMPUTER PROGRAM PRODUCTS FOR SELECTING A RESOURCE IN RESPONSE TO A CHANGE IN AVAILABLE ENERGY Robert Paul Morris

Patent or Application No.	Filing Date	Title of Patent and First Named Inventor
12/758,828	04-13-2010	METHODS, SYSTEMS, AND COMPUTER PROGRAM PRODUCTS FOR IDENTIFYING AN IDLE USER INTERFACE ELEMENT Robert Paul Morris
8,233,482	04-22-2010	METHODS, SYSTEMS, AND COMPUTER PROGRAM PRODUCTS FOR DISABLING AN OPERATIVE COUPLING TO A NETWORK Robert Paul Morris
13/531,544	06-24-2012	METHODS, SYSTEMS, AND COMPUTER PROGRAM PRODUCTS FOR DISABLING AN OPERATIVE COUPLING TO A NETWORK Robert Paul Morris
12/819,214	06-20-2010	METHODS, SYSTEMS, AND COMPUTER PROGRAM PRODUCTS FOR IDENTIFYING A CONTACTEE IN A COMMUNICATION Robert Paul Morris
8,331,372	04-22-2010	METHODS, SYSTEMS, AND COMPUTER PROGRAM PRODUCTS FOR ENABLING AN OPERATIVE COUPLING TO A NETWORK Robert Paul Morris
13/663,513	10-30-2012	METHODS, SYSTEMS, AND COMPUTER PROGRAM PRODUCTS FOR ENABLING AN OPERATIVE COUPLING TO A NETWORK Robert Paul Morris
12/830,385	07-05-2010	METHODS, SYSTEMS, AND COMPUTER PROGRAM PRODUCTS FOR CONFIGURING ACCESS TO A DATA SOURCE BASED ON A CHANNEL IDENTIFIER Robert Paul Morris

Patent or Application No.	Filing Date	Title of Patent and First Named Inventor
12/789,538	05-28-2010	METHODS, SYSTEMS, AND COMPUTER PROGRAM PRODUCTS FOR PROCESSING AN ATTACHED COMMAND RESPONSE BASED ON A MARKUP ELEMENT Robert Paul Morris
12/789,550	05-28-2010	METHODS, SYSTEMS, AND COMPUTER PROGRAM PRODUCTS FOR PROCESSING A NON-RETURNABLE COMMAND RESPONSE BASED ON A MARKUP ELEMENT Robert Paul Morris
13/941,502	07-14-2013	METHODS, SYSTEMS, AND COMPUTER PROGRAM PRODUCTS FOR PROCESSING A NON-RETURNABLE COMMAND RESPONSE BASED ON A MARKUP ELEMENT Robert Paul Morris
12/788,381	05-27-2010	METHODS, SYSTEMS, AND COMPUTER PROGRAM PRODUCTS FOR PROCESSING A COMBINED COMMAND RESPONSE Robert Paul Morris
12/789,568	05-28-2010	METHODS, SYSTEMS, AND COMPUTER PROGRAM PRODUCTS FOR PROCESSING A COMBINED COMMAND RESPONSE BASED ON A MARKUP ELEMENT Robert Paul Morris
12/819,215	06-20-2010	METHODS, SYSTEMS, AND COMPUTER PROGRAM PRODUCTS FOR IDENTIFYING A COMMUNICANT IN A COMMUNICATION Robert Paul Morris

Patent or Application No.	Filing Date	Title of Patent and First Named Inventor
8,447,819	07-09-2010	METHODS, SYSTEMS, AND COMPUTER PROGRAM PRODUCTS FOR PROCESSING A REQUEST FOR A RESOURCE IN A COMMUNICATION Robert Paul Morris
13/867,040	04-20-2013	METHODS, SYSTEMS, AND COMPUTER PROGRAM PRODUCTS FOR PROCESSING A REQUEST FOR A RESOURCE IN A COMMUNICATION Robert Paul Morris
12/833,016	07-09-2010	METHODS, SYSTEMS, AND COMPUTER PROGRAM PRODUCTS FOR REFERENCING AN ATTACHMENT IN A COMMUNICATION Robert Paul Morris
12/830,389	07-05-2010	METHODS, SYSTEMS, AND COMPUTER PROGRAM PRODUCTS FOR PROCESSING A CONTEXTUAL CHANNEL IDENTIFIER Robert Paul Morris
12/830,388	07-05-2010	METHODS, SYSTEMS, AND COMPUTER PROGRAM PRODUCTS FOR SELECTING A DATA SOURCE BASED ON A CHANNEL IDENTIFIER Robert Paul Morris
12/857,851	08-17-2010	METHODS, SYSTEMS, AND COMPUTER PROGRAM PRODUCTS FOR SELECTING A RESOURCE BASED ON A MEASURE OF A PROCESSING COST Robert Paul Morris
12/830,392	07-05-2010	METHODS, SYSTEMS, AND COMPUTER PROGRAM PRODUCTS FOR CONFIGURING A CONTEXTUAL CHANNEL IDENTIFIER Robert Paul Morris

Patent or Application No.	Filing Date	Title of Patent and First Named Inventor
13/025,939	02-11-2011	METHODS, SYSTEMS, AND COMPUTER PROGRAM PRODUCTS FOR PROVIDING STEERING-CONTROL FEEDBACK TO AN OPERATOR OF AN AUTOMOTIVE VEHICLE Robert Paul Morris
13/025,944	02-11-2011	METHODS, SYSTEMS, AND COMPUTER PROGRAM PRODUCTS FOR MANAGING ATTENTION OF A USER OF A PORTABLE ELECTRONIC DEVICE Robert Paul Morris
13/024,444	02-10-2011	METHODS, SYSTEMS, AND COMPUTER PROGRAM PRODUCTS FOR MANAGING OPERATION OF A PORTABLE ELECTRONIC DEVICE Robert Paul Morris
13/023,932	02-09-2011	METHODS, SYSTEMS, AND COMPUTER PROGRAM PRODUCTS FOR ALTERING ATTENTION OF AN AUTOMOTIVE VEHICLE OPERATOR Robert Paul Morris
13/023,952	02-09-2011	METHODS, SYSTEMS, AND COMPUTER PROGRAM PRODUCTS FOR MANAGING ATTENTION OF AN OPERATOR AN AUTOMOTIVE VEHICLE Robert Paul Morris
13/024,466	02-10-2011	METHODS, SYSTEMS, AND COMPUTER PROGRAM PRODUCTS FOR MANAGING OPERATION OF AN AUTOMOTIVE VEHICLE Robert Paul Morris

Assignors will not sign any writing or do any act conflicting with this Assignment, and, without further compensation, will sign all documents and do such additional acts as Assignee, its successors, legal representatives, and assigns deem necessary or desirable to perfect enjoyment of the Rights, conduct proceedings regarding the Rights (including any litigation or interference proceedings), or perfect or defend title to the Rights. Assignors request the respective patent office

or governmental agency in each jurisdiction to issue any and all patents, certificates of invention, utility models, or other governmental grants or issuances that may be granted upon any of the Rights in the name of the Assignee, as the assignee to the entire interest therein.

The terms and conditions of this Assignment will inure to the benefit of Assignee, its successors, legal representatives, and assigns and will be binding upon Assignors, their successors, legal representatives and assigns.

Robert Paul Morris

Name: Robert Paul Morris
(Signature MUST be attested)

ATTESTATION OF SIGNATURE PURSUANT TO 28 U.S.C. § 1746

The undersigned witnessed the signature of Robert Paul Morris to the above Assignment of Patent Rights and makes the following statements:

1. I am over the age of 18 and competent to testify as to the facts in this Attestation block if called upon to do so.

2. Robert Paul Morris is personally known to me (or proved to me on the basis of satisfactory evidence) and appeared before me on _____, 2013 to execute the above Assignment of Patent Rights.

3. Robert Paul Morris subscribed to the above Assignment of Patent Rights.

I declare under penalty of perjury under the laws of the United States of America that the statements made in the three (3) numbered paragraphs immediately above are true and correct.

EXECUTED on Sept 27, 2013

J. Oscar Lawson III

Print Name: J. Oscar Lawson, III

UNITED STATES PATENT AND TRADEMARK OFFICE

UNITED STATES DEPARTMENT OF COMMERCE
United States Patent and Trademark Office
Address: COMMISSIONER FOR PATENTS
P.O. Box 1450
Alexandria, Virginia 22313-1450
www.uspto.gov

APPLICATION NUMBER	FILING OR 371(C) DATE	FIRST NAMED APPLICANT	ATTY. DOCKET NO./TITLE
12/789,538	05/28/2010	Robert Paul Morris	0147-SP

CONFIRMATION NO. 8814

POA ACCEPTANCE LETTER

92045
The Caldwell Firm, LLC
PO Box 59655
Dept. SVIPGP
Dallas, TX 75229

OC000000064679780

Date Mailed: 10/31/2013

NOTICE OF ACCEPTANCE OF POWER OF ATTORNEY

This is in response to the Power of Attorney filed 10/28/2013.

The Power of Attorney in this application is accepted. Correspondence in this application will be mailed to the above address as provided by 37 CFR 1.33.

/qtran/

Office of Data Management, Application Assistance Unit (571) 272-4000, or (571) 272-4200, or 1-888-786-0101

PTO/SB/80 (11-08)
Approved for use through 11/30/2011. OMB 0651-0035
U.S. Patent and Trademark Office; U.S. DEPARTMENT OF COMMERCE
Under the Paperwork Reduction Act of 1995, no persons are required to respond to a collection of information unless it displays a valid OMB control number.

POWER OF ATTORNEY TO PROSECUTE APPLICATIONS BEFORE THE USPTO

I hereby revoke all previous powers of attorney given in the application identified in the attached statement under 37 CFR 3.73(b).

I hereby appoint:

☑ Practitioners associated with the Customer Number: 92045

OR

☐ Practitioner(s) named below (if more than ten patent practitioners are to be named, then a customer number must be used):

Name	Registration Number	Name	Registration Number

as attorney(s) or agent(s) to represent the undersigned before the United States Patent and Trademark Office (USPTO) in connection with any and all patent applications assigned only to the undersigned according to the USPTO assignment records or assignment documents attached to this form in accordance with 37 CFR 3.73(b).

Please change the correspondence address for the application identified in the attached statement under 37 CFR 3.73(b) to:

☑ The address associated with Customer Number: 92045

OR

☐ Firm or Individual Name			
Address			
City		State	Zip
Country			
Telephone		Email	

Assignee Name and Address:

Sitting Man, LLC
712 Latta St
Raleigh, NC 27607

A copy of this form, together with a statement under 37 CFR 3.73(b) (Form PTO/SB/96 or equivalent) is required to be filed in each application in which this form is used. The statement under 37 CFR 3.73(b) may be completed by one of the practitioners appointed in this form if the appointed practitioner is authorized to act on behalf of the assignee, and must identify the application in which this Power of Attorney is to be filed.

SIGNATURE of Assignee of Record

The individual whose signature and title is supplied below is authorized to act on behalf of the assignee

Signature	/Robert Paul Morris/	Date
Name	Robert Paul Morris	Telephone
Title	Managing Member	

This collection of information is required by 37 CFR 1.31, 1.32 and 1.33. The information is required to obtain or retain a benefit by the public which is to file (and by the USPTO to process) an application. Confidentiality is governed by 35 U.S.C. 122 and 37 CFR 1.11 and 1.14. This collection is estimated to take 3 minutes to complete, including gathering, preparing, and submitting the completed application form to the USPTO. Time will vary depending upon the individual case. Any comments on the amount of time you require to complete this form and/or suggestions for reducing this burden, should be sent to the Chief Information Officer, U.S. Patent and Trademark Office, U.S. Department of Commerce, P.O. Box 1450, Alexandria, VA 22313-1450. DO NOT SEND FEES OR COMPLETED FORMS TO THIS ADDRESS. **SEND TO: Commissioner for Patents, P.O. Box 1450, Alexandria, VA 22313-1450.**

If you need assistance in completing the form, call 1-800-PTO-9199 and select option 2.

Privacy Act Statement

The **Privacy Act of 1974 (P.L. 93-579)** requires that you be given certain information in connection with your submission of the attached form related to a patent application or patent. Accordingly, pursuant to the requirements of the Act, please be advised that: (1) the general authority for the collection of this information is 35 U.S.C. 2(b)(2); (2) furnishing of the information solicited is voluntary; and (3) the principal purpose for which the information is used by the U.S. Patent and Trademark Office is to process and/or examine your submission related to a patent application or patent. If you do not furnish the requested information, the U.S. Patent and Trademark Office may not be able to process and/or examine your submission, which may result in termination of proceedings or abandonment of the application or expiration of the patent.

The information provided by you in this form will be subject to the following routine uses:

1. The information on this form will be treated confidentially to the extent allowed under the Freedom of Information Act (5 U.S.C. 552) and the Privacy Act (5 U.S.C 552a). Records from this system of records may be disclosed to the Department of Justice to determine whether disclosure of these records is required by the Freedom of Information Act.
2. A record from this system of records may be disclosed, as a routine use, in the course of presenting evidence to a court, magistrate, or administrative tribunal, including disclosures to opposing counsel in the course of settlement negotiations.
3. A record in this system of records may be disclosed, as a routine use, to a Member of Congress submitting a request involving an individual, to whom the record pertains, when the individual has requested assistance from the Member with respect to the subject matter of the record.
4. A record in this system of records may be disclosed, as a routine use, to a contractor of the Agency having need for the information in order to perform a contract. Recipients of information shall be required to comply with the requirements of the Privacy Act of 1974, as amended, pursuant to 5 U.S.C. 552a(m).
5. A record related to an International Application filed under the Patent Cooperation Treaty in this system of records may be disclosed, as a routine use, to the International Bureau of the World Intellectual Property Organization, pursuant to the Patent Cooperation Treaty.
6. A record in this system of records may be disclosed, as a routine use, to another federal agency for purposes of National Security review (35 U.S.C. 181) and for review pursuant to the Atomic Energy Act (42 U.S.C. 218(c)).
7. A record from this system of records may be disclosed, as a routine use, to the Administrator, General Services, or his/her designee, during an inspection of records conducted by GSA as part of that agency's responsibility to recommend improvements in records management practices and programs, under authority of 44 U.S.C. 2904 and 2906. Such disclosure shall be made in accordance with the GSA regulations governing inspection of records for this purpose, and any other relevant (*i.e.*, GSA or Commerce) directive. Such disclosure shall not be used to make determinations about individuals.
8. A record from this system of records may be disclosed, as a routine use, to the public after either publication of the application pursuant to 35 U.S.C. 122(b) or issuance of a patent pursuant to 35 U.S.C. 151. Further, a record may be disclosed, subject to the limitations of 37 CFR 1.14, as a routine use, to the public if the record was filed in an application which became abandoned or in which the proceedings were terminated and which application is referenced by either a published application, an application open to public inspection or an issued patent.
9. A record from this system of records may be disclosed, as a routine use, to a Federal, State, or local law enforcement agency, if the USPTO becomes aware of a violation or potential violation of law or regulation.

ASSIGNMENT OF PATENT RIGHTS

For valuable consideration, the receipt and sufficiency of which is hereby acknowledged, on this 5th day of September, 2013, Robert Paul Morris of Wake County, Raleigh, North Carolina, a person, ("**Assignor**"), hereby sells, assigns, and transfers to Sitting Man, LLC, a Delaware limited liability company ("**Assignee**"), the full extent of all right, title, and interest in and to any and all of the following (collectively, the "**Rights**"):

1. The patents, provisional patent applications and patent applications listed in the table below (individually and collectively referred to herein as the "**Patents**");
2. All inventions claimed or described in the Patents (collectively, the "**Inventions**");
3. All rights with respect to the Inventions, including all U.S. patents or other governmental grants or issuances that may be granted with respect to the Inventions or from any direct or indirect divisionals, continuations, continuations-in-part, or other patent applications claiming priority rights from the Patents ("**Potential Patents**");
4. All reissues, reexaminations, extensions, registrations, or any and all priority patent application(s) of the Patents or Potential Patents;
5. All non-United States patents, patent applications, and counterparts relating to any or all of the Inventions, the Patents, or Potential Patents, including, without limitation, certificates of invention, utility models, industrial design protection, design patent protection, and other governmental grants or issuances ("**Foreign Rights**"), and including the right to file foreign applications directly in the name of Assignee, its successors and assigns;
6. The right to claim priority rights deriving from the Patents;
7. All causes of action and remedies related to the Patents, the Inventions, Potential Patents, or Foreign Rights (including, without limitation, the right to sue for past, present, or future infringement, misappropriation or violation of rights related to any of the foregoing and the right to collect royalties and other payments under or on account of any of the foregoing); and
8. Any and all other rights and interests arising out of, in connection with, or in relation to, the Patents, the Inventions, Potential Patents, or Foreign Rights.

Patent or Application No.	Filing Date	Title of Patent and First Named Inventor
12/688,996	01-18-2010	METHODS, SYSTEMS, AND COMPUTER PROGRAM PRODUCTS FOR TRAVERSING NODES IN PATH ON A DISPLAY DEVICE Robert Paul Morris
13/023,883	02-09-2011	METHODS, SYSTEMS, AND COMPUTER PROGRAM PRODUCTS FOR DIRECTING ATTENTION OF AN OCCUPANT OF AN AUTOMOTIVE VEHICLE TO A VIEWPORT Robert Paul Morris

Patent or Application No.	Filing Date	Title of Patent and First Named Inventor
8,422,858	01-21-2010	METHODS, SYSTEMS, AND COMPUTER PROGRAM PRODUCTS FOR COORDINATING PLAYING OF MEDIA STREAMS Robert Paul Morris
13/790,082	03-08-2013	METHODS, SYSTEMS, AND COMPUTER PROGRAM PRODUCTS FOR COORDINATING PLAYING OF MEDIA STREAMS Robert Paul Morris
12/696,854	01-29-2010	METHODS, SYSTEMS, AND COMPUTER PROGRAM PRODUCTS FOR CONTROLLING PLAY OF MEDIA STREAMS Robert Paul Morris
12/689,169	01-18-2010	METHODS, SYSTEMS, AND COMPUTER PROGRAM PRODUCTS FOR AUTOMATICALLY SELECTING OBJECTS IN A PLURALITY OF OBJECTS Robert Paul Morris
12/868,767	08-26-2010	METHODS, SYSTEMS, AND COMPUTER PROGRAM PRODUCTS FOR NAVIGATING BETWEEN VISUAL COMPONENTS Robert Paul Morris
13/045,556	03-11-2011	METHODS, SYSTEMS, AND COMPUTER PROGRAM PRODUCTS FOR PROVIDING FEEDBACK TO A USER OF A PORTABLE ELECTRONIC DEVICE IN MOTION Robert Paul Morris
12/689,177	01-18-2010	METHODS, SYSTEMS, AND COMPUTER PROGRAM PRODUCTS FOR AUTOMATING OPERATIONS ON A PLURALITY OF OBJECTS Robert Paul Morris

Patent or Application No.	Filing Date	Title of Patent and First Named Inventor
12/955,993	11-30-2010	METHODS, SYSTEMS, AND COMPUTER PROGRAM PRODUCTS FOR AUTOMATICALLY SCROLLING ITEMS IN A SELECTION CONTROL Robert Paul Morris
8,346,853	05-27-2010	METHODS, SYSTEMS, AND COMPUTER PROGRAM PRODUCTS FOR PROCESSING AN ATTACHED COMMAND RESPONSE Robert Paul Morris
13/685,739	11-27-2012	METHODS, SYSTEMS, AND COMPUTER PROGRAM PRODUCTS FOR PROCESSING AN ATTACHED COMMAND RESPONSE Robert Paul Morris
12/714,063	02-26-2010	METHODS, SYSTEMS, AND COMPUTER PROGRAM PRODUCTS FOR DETECTING AN IDLE TCP CONNECTION Robert Paul Morris
12/705,638	02-15-2010	METHODS, SYSTEMS, AND COMPUTER PROGRAM PRODUCTS FOR DELAYING PRESENTATION OF AN UPDATE TO A USER INTERFACE Robert Paul Morris
8,219,606	02-27-2010	METHODS, SYSTEMS, AND COMPUTER PROGRAM PRODUCTS FOR SHARING INFORMATION FOR DETECTING AN IDLE TCP CONNECTION Robert Paul Morris
13/477,402	05-22-2012	METHODS, SYSTEMS, AND COMPUTER PROGRAM PRODUCTS FOR SHARING INFORMATION FOR DETECTING AN IDLE TCP CONNECTION Robert Paul Morris

Patent or Application No.	Filing Date	Title of Patent and First Named Inventor
12/857,836	08-17-2010	METHODS, SYSTEMS, AND COMPUTER PROGRAM PRODUCTS FOR MAINTAINING A RESOURCE BASED ON A COST OF ENERGY Robert Paul Morris
12/857,847	08-17-2010	METHODS, SYSTEMS, AND COMPUTER PROGRAM PRODUCTS FOR PRESENTING AN INDICATION OF A COST OF PROCESSING A RESOURCE Robert Paul Morris
12/758,125	04-12-2010	METHODS, SYSTEMS, AND COMPUTER PROGRAM PRODUCTS FOR MANAGING AN IDLE COMPUTING COMPONENT Robert Paul Morris
12/956,008	11-30-2010	METHODS, SYSTEMS, AND COMPUTER PROGRAM PRODUCTS FOR BINDING ATTRIBUTES BETWEEN VISUAL COMPONENTS Robert Paul Morris
12/788,373	05-27-2010	METHODS, SYSTEMS, AND COMPUTER PROGRAM PRODUCTS FOR PREVENTING PROCESSING OF AN HTTP RESPONSE Robert Paul Morris
13/023,916	02-09-2011	METHODS, SYSTEMS, AND COMPUTER PROGRAM PRODUCTS FOR DIRECTING ATTENTION TO A SEQUENCE OF VIEWPORTS OF AN AUTOMOTIVE VEHICLE Robert Paul Morris
12/857,857	08-17-2010	METHODS, SYSTEMS, AND COMPUTER PROGRAM PRODUCTS FOR SELECTING A RESOURCE IN RESPONSE TO A CHANGE IN AVAILABLE ENERGY Robert Paul Morris

Patent or Application No.	Filing Date	Title of Patent and First Named Inventor
12/758,828	04-13-2010	METHODS, SYSTEMS, AND COMPUTER PROGRAM PRODUCTS FOR IDENTIFYING AN IDLE USER INTERFACE ELEMENT Robert Paul Morris
8,233,482	04-22-2010	METHODS, SYSTEMS, AND COMPUTER PROGRAM PRODUCTS FOR DISABLING AN OPERATIVE COUPLING TO A NETWORK Robert Paul Morris
13/531,544	06-24-2012	METHODS, SYSTEMS, AND COMPUTER PROGRAM PRODUCTS FOR DISABLING AN OPERATIVE COUPLING TO A NETWORK Robert Paul Morris
12/819,214	06-20-2010	METHODS, SYSTEMS, AND COMPUTER PROGRAM PRODUCTS FOR IDENTIFYING A CONTACTEE IN A COMMUNICATION Robert Paul Morris
8,331,372	04-22-2010	METHODS, SYSTEMS, AND COMPUTER PROGRAM PRODUCTS FOR ENABLING AN OPERATIVE COUPLING TO A NETWORK Robert Paul Morris
13/663,513	10-30-2012	METHODS, SYSTEMS, AND COMPUTER PROGRAM PRODUCTS FOR ENABLING AN OPERATIVE COUPLING TO A NETWORK Robert Paul Morris
12/830,385	07-05-2010	METHODS, SYSTEMS, AND COMPUTER PROGRAM PRODUCTS FOR CONFIGURING ACCESS TO A DATA SOURCE BASED ON A CHANNEL IDENTIFIER Robert Paul Morris

Patent or Application No.	Filing Date	Title of Patent and First Named Inventor
12/789,538	05-28-2010	METHODS, SYSTEMS, AND COMPUTER PROGRAM PRODUCTS FOR PROCESSING AN ATTACHED COMMAND RESPONSE BASED ON A MARKUP ELEMENT Robert Paul Morris
12/789,550	05-28-2010	METHODS, SYSTEMS, AND COMPUTER PROGRAM PRODUCTS FOR PROCESSING A NON-RETURNABLE COMMAND RESPONSE BASED ON A MARKUP ELEMENT Robert Paul Morris
13/941,502	07-14-2013	METHODS, SYSTEMS, AND COMPUTER PROGRAM PRODUCTS FOR PROCESSING A NON-RETURNABLE COMMAND RESPONSE BASED ON A MARKUP ELEMENT Robert Paul Morris
12/788,381	05-27-2010	METHODS, SYSTEMS, AND COMPUTER PROGRAM PRODUCTS FOR PROCESSING A COMBINED COMMAND RESPONSE Robert Paul Morris
12/789,568	05-28-2010	METHODS, SYSTEMS, AND COMPUTER PROGRAM PRODUCTS FOR PROCESSING A COMBINED COMMAND RESPONSE BASED ON A MARKUP ELEMENT Robert Paul Morris
12/819,215	06-20-2010	METHODS, SYSTEMS, AND COMPUTER PROGRAM PRODUCTS FOR IDENTIFYING A COMMUNICANT IN A COMMUNICATION Robert Paul Morris

Patent or Application No.	Filing Date	Title of Patent and First Named Inventor
8,447,819	07-09-2010	METHODS, SYSTEMS, AND COMPUTER PROGRAM PRODUCTS FOR PROCESSING A REQUEST FOR A RESOURCE IN A COMMUNICATION Robert Paul Morris
13/867,040	04-20-2013	METHODS, SYSTEMS, AND COMPUTER PROGRAM PRODUCTS FOR PROCESSING A REQUEST FOR A RESOURCE IN A COMMUNICATION Robert Paul Morris
12/833,016	07-09-2010	METHODS, SYSTEMS, AND COMPUTER PROGRAM PRODUCTS FOR REFERENCING AN ATTACHMENT IN A COMMUNICATION Robert Paul Morris
12/830,389	07-05-2010	METHODS, SYSTEMS, AND COMPUTER PROGRAM PRODUCTS FOR PROCESSING A CONTEXTUAL CHANNEL IDENTIFIER Robert Paul Morris
12/830,388	07-05-2010	METHODS, SYSTEMS, AND COMPUTER PROGRAM PRODUCTS FOR SELECTING A DATA SOURCE BASED ON A CHANNEL IDENTIFIER Robert Paul Morris
12/857,851	08-17-2010	METHODS, SYSTEMS, AND COMPUTER PROGRAM PRODUCTS FOR SELECTING A RESOURCE BASED ON A MEASURE OF A PROCESSING COST Robert Paul Morris
12/830,392	07-05-2010	METHODS, SYSTEMS, AND COMPUTER PROGRAM PRODUCTS FOR CONFIGURING A CONTEXTUAL CHANNEL IDENTIFIER Robert Paul Morris

Patent or Application No.	Filing Date	Title of Patent and First Named Inventor
13/025,939	02-11-2011	METHODS, SYSTEMS, AND COMPUTER PROGRAM PRODUCTS FOR PROVIDING STEERING-CONTROL FEEDBACK TO AN OPERATOR OF AN AUTOMOTIVE VEHICLE Robert Paul Morris
13/025,944	02-11-2011	METHODS, SYSTEMS, AND COMPUTER PROGRAM PRODUCTS FOR MANAGING ATTENTION OF A USER OF A PORTABLE ELECTRONIC DEVICE Robert Paul Morris
13/024,444	02-10-2011	METHODS, SYSTEMS, AND COMPUTER PROGRAM PRODUCTS FOR MANAGING OPERATION OF A PORTABLE ELECTRONIC DEVICE Robert Paul Morris
13/023,932	02-09-2011	METHODS, SYSTEMS, AND COMPUTER PROGRAM PRODUCTS FOR ALTERING ATTENTION OF AN AUTOMOTIVE VEHICLE OPERATOR Robert Paul Morris
13/023,952	02-09-2011	METHODS, SYSTEMS, AND COMPUTER PROGRAM PRODUCTS FOR MANAGING ATTENTION OF AN OPERATOR AN AUTOMOTIVE VEHICLE Robert Paul Morris
13/024,466	02-10-2011	METHODS, SYSTEMS, AND COMPUTER PROGRAM PRODUCTS FOR MANAGING OPERATION OF AN AUTOMOTIVE VEHICLE Robert Paul Morris

Assignors will not sign any writing or do any act conflicting with this Assignment, and, without further compensation, will sign all documents and do such additional acts as Assignee, its successors, legal representatives, and assigns deem necessary or desirable to perfect enjoyment of the Rights, conduct proceedings regarding the Rights (including any litigation or interference proceedings), or perfect or defend title to the Rights. Assignors request the respective patent office

or governmental agency in each jurisdiction to issue any and all patents, certificates of invention, utility models, or other governmental grants or issuances that may be granted upon any of the Rights in the name of the Assignee, as the assignee to the entire interest therein.

The terms and conditions of this Assignment will inure to the benefit of Assignee, its successors, legal representatives, and assigns and will be binding upon Assignors, their successors, legal representatives and assigns.

Robert Paul Morris

Name: Robert Paul Morris
(Signature MUST be attested)

ATTESTATION OF SIGNATURE PURSUANT TO 28 U.S.C. § 1746

The undersigned witnessed the signature of Robert Paul Morris to the above Assignment of Patent Rights and makes the following statements:

1. I am over the age of 18 and competent to testify as to the facts in this Attestation block if called upon to do so.

2. Robert Paul Morris is personally known to me (or proved to me on the basis of satisfactory evidence) and appeared before me on _____, 2013 to execute the above Assignment of Patent Rights.

3. Robert Paul Morris subscribed to the above Assignment of Patent Rights.

I declare under penalty of perjury under the laws of the United States of America that the statements made in the three (3) numbered paragraphs immediately above are true and correct.

EXECUTED on Sept 27, 2013

J. Dewey Lesaver III

Print Name: J. Dewey Lesaver, III

PTO/SB/96 (07-09)
Approved for use through 07/31/2012. OMB 0651-0031
U.S. Patent and Trademark Office; U.S. DEPARTMENT OF COMMERCE
Under the Paperwork Reduction Act of 1995, no persons are required to respond to a collection of information unless it displays a valid OMB control number.

STATEMENT UNDER 37 CFR 3.73(b)

Applicant/Patent Owner: Robert Paul Morris

Application No./Patent No.: 12/789,538 Filed/Issue Date: 05-28-2010

Titled: METHODS, SYSTEMS, AND COMPUTER PROGRAM PRODUCTS FOR PROCESSING AN ATTACHED COMMAND RESPONSE BASED ON A MARKUP ELEMENT

Sitting Man, LLC, a Limited Liability Company
(Name of Assignee) (Type of Assignee, e.g., corporation, partnership, university, government agency, etc.

states that it is:

1. ☒ the assignee of the entire right, title, and interest in;

2. ☐ an assignee of less than the entire right, title, and interest in
(The extent (by percentage) of its ownership interest is _____ %); or

3. ☐ the assignee of an undivided interest in the entirety of (a complete assignment from one of the joint inventors was made)

the patent application/patent identified above, by virtue of either:

A. ☐ An assignment from the inventor(s) of the patent application/patent identified above. The assignment was recorded in the United States Patent and Trademark Office at Reel _____, Frame _____, or for which a copy therefore is attached.

OR

B. ☒ A chain of title from the inventor(s), of the patent application/patent identified above, to the current assignee as follows:

1. From: Robert Paul Morris To: Sitting Man, LLC
The document was recorded in the United States Patent and Trademark Office at
Reel _____, Frame _____, or for which a copy thereof is attached.

2. From: _____ To: _____
The document was recorded in the United States Patent and Trademark Office at
Reel _____, Frame _____, or for which a copy thereof is attached.

3. From: _____ To: _____
The document was recorded in the United States Patent and Trademark Office at
Reel _____, Frame _____, or for which a copy thereof is attached.

☐ Additional documents in the chain of title are listed on a supplemental sheet(s).

☒ As required by 37 CFR 3.73(b)(1)(i), the documentary evidence of the chain of title from the original owner to the assignee was, or concurrently is being, submitted for recordation pursuant to 37 CFR 3.11.

[NOTE: A separate copy (*i.e.*, a true copy of the original assignment document(s)) must be submitted to Assignment Division in accordance with 37 CFR Part 3, to record the assignment in the records of the USPTO. See MPEP 302.08]

The undersigned (whose title is supplied below) is authorized to act on behalf of the assignee.

/Robert Paul Morris/ 10/17/2013
Signature Date

Robert Paul Morris Managing Member
Printed or Typed Name Title

This collection of information is required by 37 CFR 3.73(b). The information is required to obtain or retain a benefit by the public which is to file (and by the USPTO to process) an application. Confidentiality is governed by 35 U.S.C. 122 and 37 CFR 1.11 and 1.14. This collection is estimated to take 12 minutes to complete, including gathering, preparing, and submitting the completed application form to the USPTO. Time will vary depending upon the individual case. Any comments on the amount of time you require to complete this form and/or suggestions for reducing this burden, should be sent to the Chief Information Officer, U.S. Patent and Trademark Office, U.S. Department of Commerce, P.O. Box 1450, Alexandria, VA 22313-1450. DO NOT SEND FEES OR COMPLETED FORMS TO THIS ADDRESS. **SEND TO: Commissioner for Patents, P.O. Box 1450, Alexandria, VA 22313-1450.**

If you need assistance in completing the form, call 1-800-PTO-9199 and select option 2.

Privacy Act Statement

The **Privacy Act of 1974 (P.L. 93-579)** requires that you be given certain information in connection with your submission of the attached form related to a patent application or patent. Accordingly, pursuant to the requirements of the Act, please be advised that: (1) the general authority for the collection of this information is 35 U.S.C. 2(b)(2); (2) furnishing of the information solicited is voluntary; and (3) the principal purpose for which the information is used by the U.S. Patent and Trademark Office is to process and/or examine your submission related to a patent application or patent. If you do not furnish the requested information, the U.S. Patent and Trademark Office may not be able to process and/or examine your submission, which may result in termination of proceedings or abandonment of the application or expiration of the patent.

The information provided by you in this form will be subject to the following routine uses:

1. The information on this form will be treated confidentially to the extent allowed under the Freedom of Information Act (5 U.S.C. 552) and the Privacy Act (5 U.S.C 552a). Records from this system of records may be disclosed to the Department of Justice to determine whether disclosure of these records is required by the Freedom of Information Act.
2. A record from this system of records may be disclosed, as a routine use, in the course of presenting evidence to a court, magistrate, or administrative tribunal, including disclosures to opposing counsel in the course of settlement negotiations.
3. A record in this system of records may be disclosed, as a routine use, to a Member of Congress submitting a request involving an individual, to whom the record pertains, when the individual has requested assistance from the Member with respect to the subject matter of the record.
4. A record in this system of records may be disclosed, as a routine use, to a contractor of the Agency having need for the information in order to perform a contract. Recipients of information shall be required to comply with the requirements of the Privacy Act of 1974, as amended, pursuant to 5 U.S.C. 552a(m).
5. A record related to an International Application filed under the Patent Cooperation Treaty in this system of records may be disclosed, as a routine use, to the International Bureau of the World Intellectual Property Organization, pursuant to the Patent Cooperation Treaty.
6. A record in this system of records may be disclosed, as a routine use, to another federal agency for purposes of National Security review (35 U.S.C. 181) and for review pursuant to the Atomic Energy Act (42 U.S.C. 218(c)).
7. A record from this system of records may be disclosed, as a routine use, to the Administrator, General Services, or his/her designee, during an inspection of records conducted by GSA as part of that agency's responsibility to recommend improvements in records management practices and programs, under authority of 44 U.S.C. 2904 and 2906. Such disclosure shall be made in accordance with the GSA regulations governing inspection of records for this purpose, and any other relevant (*i.e.*, GSA or Commerce) directive. Such disclosure shall not be used to make determinations about individuals.
8. A record from this system of records may be disclosed, as a routine use, to the public after either publication of the application pursuant to 35 U.S.C. 122(b) or issuance of a patent pursuant to 35 U.S.C. 151. Further, a record may be disclosed, subject to the limitations of 37 CFR 1.14, as a routine use, to the public if the record was filed in an application which became abandoned or in which the proceedings were terminated and which application is referenced by either a published application, an application open to public inspection or an issued patent.
9. A record from this system of records may be disclosed, as a routine use, to a Federal, State, or local law enforcement agency, if the USPTO becomes aware of a violation or potential violation of law or regulation.

Electronic Acknowledgement Receipt

EFS ID:	17237681
Application Number:	12789538
International Application Number:	
Confirmation Number:	8814
Title of Invention:	METHODS, SYSTEMS, AND COMPUTER PROGRAM PRODUCTS FOR PROCESSING AN ATTACHED COMMAND RESPONSE BASED ON A MARKUP ELEMENT
First Named Inventor/Applicant Name:	Robert Paul Morris
Customer Number:	92924
Filer:	Patrick Edgar Caldwell
Filer Authorized By:	
Attorney Docket Number:	0147-SP
Receipt Date:	28-OCT-2013
Filing Date:	28-MAY-2010
Time Stamp:	09:40:15
Application Type:	Utility under 35 USC 111(a)

Payment information:

Submitted with Payment	no

File Listing:

Document Number	Document Description	File Name	File Size(Bytes)/ Message Digest	Multi Part /.zip	Pages (if appl.)
1	Power of Attorney	Morris_POA_pre_2012.pdf	435724 16c4e6143c6e06d8305afa69a2cfdb95096a8d40	no	2

Warnings:

Information:

2	Miscellaneous Incoming Letter	Morris-SittingMan_Assignment_vF_9-5-13.pdf	769618 5dd85c282cf6ef37223a412e0cec878eb779f594	no	9
Warnings:					
Information:					
3	Assignee showing of ownership per 37 CFR 3.73.	PMOR0147_373b.pdf	423151 b0e8cd90c80803f51bb052cd8fab921f62964eea	no	2
Warnings:					
Information:					
			Total Files Size (in bytes):	1628493	

This Acknowledgement Receipt evidences receipt on the noted date by the USPTO of the indicated documents, characterized by the applicant, and including page counts, where applicable. It serves as evidence of receipt similar to a Post Card, as described in MPEP 503.

New Applications Under 35 U.S.C. 111
If a new application is being filed and the application includes the necessary components for a filing date (see 37 CFR 1.53(b)-(d) and MPEP 506), a Filing Receipt (37 CFR 1.54) will be issued in due course and the date shown on this Acknowledgement Receipt will establish the filing date of the application.

National Stage of an International Application under 35 U.S.C. 371
If a timely submission to enter the national stage of an international application is compliant with the conditions of 35 U.S.C. 371 and other applicable requirements a Form PCT/DO/EO/903 indicating acceptance of the application as a national stage submission under 35 U.S.C. 371 will be issued in addition to the Filing Receipt, in due course.

New International Application Filed with the USPTO as a Receiving Office
If a new international application is being filed and the international application includes the necessary components for an international filing date (see PCT Article 11 and MPEP 1810), a Notification of the International Application Number and of the International Filing Date (Form PCT/RO/105) will be issued in due course, subject to prescriptions concerning national security, and the date shown on this Acknowledgement Receipt will establish the international filing date of the application.

UNITED STATES PATENT AND TRADEMARK OFFICE

UNITED STATES DEPARTMENT OF COMMERCE
United States Patent and Trademark Office
Address: COMMISSIONER FOR PATENTS
P.O. Box 1450
Alexandria, Virginia 22313-1450
www.uspto.gov

APPLICATION NO.	FILING DATE	FIRST NAMED INVENTOR	ATTORNEY DOCKET NO.	CONFIRMATION NO.
12/789,538	05/28/2010	Robert Paul Morris	0147-SP	8814

92924 7590 10/01/2013
Small Pond Associates, LLC
Robert Paul Morris
712 Latta Street
Raleigh, NC 27607

EXAMINER
CONAWAY, JAMES E

ART UNIT	PAPER NUMBER
2454	

NOTIFICATION DATE	DELIVERY MODE
10/01/2013	ELECTRONIC

Please find below and/or attached an Office communication concerning this application or proceeding.

The time period for reply, if any, is set in the attached communication.

Notice of the Office communication was sent electronically on above-indicated "Notification Date" to the following e-mail address(es):

paul.morris@nc.rr.com
paul.morris@deeprv.com
dewey.weaver@deeprv.com

PTOL-90A (Rev. 04/07)

UNITED STATES PATENT AND TRADEMARK OFFICE

Commissioner for Patents
United States Patent and Trademark Office
P.O. Box 1450
Alexandria, VA 22313-1450
www.uspto.gov

Application No. : 12789538
Applicant : Morris
Filing Date : 05/28/2010
Date Mailed : 10/01/2013

NOTICE TO FILE CORRECTED APPLICATION PAPERS

Notice of Allowance Mailed

This application has been accorded an Allowance Date and is being prepared for issuance. The application, however, is incomplete for the reasons below.

Applicant is given 2 month(s) from the mail date of this Notice, or the time remaining from the Notice of Allowance and Fee(s) Due, whichever is longer, within which to respond.

The informalities requiring correction are indicated in the attachment(s). If the informality pertains to the abstract, specification (including claims) or drawings, the informality must be corrected with an amendment in compliance with 37 CFR 1.121 (or, if the application is a reissue application, 37 CFR 1.173). Such an amendment may be filed after payment of the issue fee if limited to correction of informalities noted herein. See Waiver of 37 CFR 1.312 for Documents Required by the Office of Patent Publication, 1280 Off. Gaz. Patent Office 918 (March 23, 2004). In addition, if the informality is not corrected until after payment of the issue fee, for purposes of 35 U.S.C. 154(b)(1)(iv), "all outstanding requirements" will be considered to have been satisfied when the informality has been corrected. A failure to respond within the above-identified time period will result in the application being ABANDONED. **This period for reply is NOT extendable under 37 CFR 1.136(a).**

See attachment(s).

A copy of this notice MUST be returned with the reply. Please address response to "Mail Stop Issue Fee, Commissioner for Patents, P.O. Box 1450, Alexandria, VA 22313-1450".

/Shirley Winslow/
Publication Branch
Office of Data Management
(571) 272-4200

Application No. 12789538

IDENTIFICATION OF SPECIFICATION/DRAWING INCONSISTENCIES

☐ On Page of the specification there is a brief description of FIG. , but the drawings filed do not include a drawing with that designation. Applicant must respond either by supplying the omitted drawing or by amending the specification to remove all references to that drawing.

☒ The drawings filed 05/28/2010 include FIG. 11c, but the specification's brief description of the drawings does not describe a drawing with that designation. Applicant must respond either by amending the specification to add a brief description of that drawing or by correcting the drawings to remove the drawing in question.

☐ Drawings are present in the application and are referred to in the detailed description of the invention, but the specification does not contain a brief description of the drawings as required by 37 CFR 1.74 and 37 CFR 1.77(b)(8).

☐ Page of the specification refers to FIG. , but no drawing with that designation is described in the brief description of the drawings and no drawing with that designation is present in the application. Applicant must respond either by amending the specification to remove all references to that drawing, or by supplying that drawing and amending the specification to add a brief description of it.

☐ OTHER:

☒ COMMENTS:
Brief Description describes Fig. 11b twice, see paragraphs 0034 & 0035.

UNITED STATES PATENT AND TRADEMARK OFFICE

UNITED STATES DEPARTMENT OF COMMERCE
United States Patent and Trademark Office
Address: COMMISSIONER FOR PATENTS
P.O. Box 1450
Alexandria, Virginia 22313-1450
www.uspto.gov

NOTICE OF ALLOWANCE AND FEE(S) DUE

92924 7590 08/16/2013
Small Pond Associates, LLC
Robert Paul Morris
712 Latta Street
Raleigh, NC 27607

EXAMINER
CONAWAY, JAMES E

ART UNIT	PAPER NUMBER
2454	

DATE MAILED: 08/16/2013

APPLICATION NO.	FILING DATE	FIRST NAMED INVENTOR	ATTORNEY DOCKET NO.	CONFIRMATION NO.
12/789,538	05/28/2010	Robert Paul Morris	0147-SP	8814

TITLE OF INVENTION: METHODS, SYSTEMS, AND COMPUTER PROGRAM PRODUCTS FOR PROCESSING AN ATTACHED COMMAND RESPONSE BASED ON A MARKUP ELEMENT

APPLN. TYPE	ENTITY STATUS	ISSUE FEE DUE	PUBLICATION FEE DUE	PREV. PAID ISSUE FEE	TOTAL FEE(S) DUE	DATE DUE
nonprovisional	SMALL	$890	$300	$0	$1190	11/18/2013

THE APPLICATION IDENTIFIED ABOVE HAS BEEN EXAMINED AND IS ALLOWED FOR ISSUANCE AS A PATENT. PROSECUTION ON THE MERITS IS CLOSED. THIS NOTICE OF ALLOWANCE IS NOT A GRANT OF PATENT RIGHTS. THIS APPLICATION IS SUBJECT TO WITHDRAWAL FROM ISSUE AT THE INITIATIVE OF THE OFFICE OR UPON PETITION BY THE APPLICANT. SEE 37 CFR 1.313 AND MPEP 1308.

THE ISSUE FEE AND PUBLICATION FEE (IF REQUIRED) MUST BE PAID WITHIN THREE MONTHS FROM THE MAILING DATE OF THIS NOTICE OR THIS APPLICATION SHALL BE REGARDED AS ABANDONED. THIS STATUTORY PERIOD CANNOT BE EXTENDED. SEE 35 U.S.C. 151. THE ISSUE FEE DUE INDICATED ABOVE DOES NOT REFLECT A CREDIT FOR ANY PREVIOUSLY PAID ISSUE FEE IN THIS APPLICATION. IF AN ISSUE FEE HAS PREVIOUSLY BEEN PAID IN THIS APPLICATION (AS SHOWN ABOVE), THE RETURN OF PART B OF THIS FORM WILL BE CONSIDERED A REQUEST TO REAPPLY THE PREVIOUSLY PAID ISSUE FEE TOWARD THE ISSUE FEE NOW DUE.

HOW TO REPLY TO THIS NOTICE:

I. Review the ENTITY STATUS shown above. If the ENTITY STATUS is shown as SMALL or MICRO, verify whether entitlement to that entity status still applies.

If the ENTITY STATUS is the same as shown above, pay the TOTAL FEE(S) DUE shown above.

If the ENTITY STATUS is changed from that shown above, on PART B - FEE(S) TRANSMITTAL, complete section number 5 titled "Change in Entity Status (from status indicated above)".

For purposes of this notice, small entity fees are 1/2 the amount of undiscounted fees, and micro entity fees are 1/2 the amount of small entity fees.

II. PART B - FEE(S) TRANSMITTAL, or its equivalent, must be completed and returned to the United States Patent and Trademark Office (USPTO) with your ISSUE FEE and PUBLICATION FEE (if required). If you are charging the fee(s) to your deposit account, section "4b" of Part B - Fee(s) Transmittal should be completed and an extra copy of the form should be submitted. If an equivalent of Part B is filed, a request to reapply a previously paid issue fee must be clearly made, and delays in processing may occur due to the difficulty in recognizing the paper as an equivalent of Part B.

III. All communications regarding this application must give the application number. Please direct all communications prior to issuance to Mail Stop ISSUE FEE unless advised to the contrary.

IMPORTANT REMINDER: Utility patents issuing on applications filed on or after Dec. 12, 1980 may require payment of maintenance fees. It is patentee's responsibility to ensure timely payment of maintenance fees when due.

PART B - FEE(S) TRANSMITTAL

Complete and send this form, together with applicable fee(s), to: Mail **Mail Stop ISSUE FEE**
Commissioner for Patents
P.O. Box 1450
Alexandria, Virginia 22313-1450
or Fax (571)-273-2885

INSTRUCTIONS: This form should be used for transmitting the ISSUE FEE and PUBLICATION FEE (if required). Blocks 1 through 5 should be completed where appropriate. All further correspondence including the Patent, advance orders and notification of maintenance fees will be mailed to the current correspondence address as indicated unless corrected below or directed otherwise in Block 1, by (a) specifying a new correspondence address; and/or (b) indicating a separate "FEE ADDRESS" for maintenance fee notifications.

CURRENT CORRESPONDENCE ADDRESS (Note: Use Block 1 for any change of address)

92924 7590 08/16/2013
Small Pond Associates, LLC
Robert Paul Morris
712 Latta Street
Raleigh, NC 27607

Note: A certificate of mailing can only be used for domestic mailings of the Fee(s) Transmittal. This certificate cannot be used for any other accompanying papers. Each additional paper, such as an assignment or formal drawing, must have its own certificate of mailing or transmission.

Certificate of Mailing or Transmission

I hereby certify that this Fee(s) Transmittal is being deposited with the United States Postal Service with sufficient postage for first class mail in an envelope addressed to the Mail Stop ISSUE FEE address above, or being facsimile transmitted to the USPTO (571) 273-2885, on the date indicated below.

(Depositor's name)
(Signature)
(Date)

APPLICATION NO.	FILING DATE	FIRST NAMED INVENTOR	ATTORNEY DOCKET NO.	CONFIRMATION NO.
12/789,538	05/28/2010	Robert Paul Morris	0147-SP	8814

TITLE OF INVENTION: METHODS, SYSTEMS, AND COMPUTER PROGRAM PRODUCTS FOR PROCESSING AN ATTACHED COMMAND RESPONSE BASED ON A MARKUP ELEMENT

APPLN. TYPE	ENTITY STATUS	ISSUE FEE DUE	PUBLICATION FEE DUE	PREV. PAID ISSUE FEE	TOTAL FEE(S) DUE	DATE DUE
nonprovisional	SMALL	$890	$300	$0	$1190	11/18/2013

EXAMINER	ART UNIT	CLASS-SUBCLASS
CONAWAY, JAMES E	2454	709-203000

1. Change of correspondence address or indication of "Fee Address" (37 CFR 1.363).

❑ Change of correspondence address (or Change of Correspondence Address form PTO/SB/122) attached.

❑ "Fee Address" indication (or "Fee Address" Indication form PTO/SB/47; Rev 03-02 or more recent) attached. **Use of a Customer Number is required.**

2. For printing on the patent front page, list

(1) the names of up to 3 registered patent attorneys or agents OR, alternatively,

(2) the name of a single firm (having as a member a registered attorney or agent) and the names of up to 2 registered patent attorneys or agents. If no name is listed, no name will be printed.

1_____
2_____
3_____

3. ASSIGNEE NAME AND RESIDENCE DATA TO BE PRINTED ON THE PATENT (print or type)

PLEASE NOTE: Unless an assignee is identified below, no assignee data will appear on the patent. If an assignee is identified below, the document has been filed for recordation as set forth in 37 CFR 3.11. Completion of this form is NOT a substitute for filing an assignment.

(A) NAME OF ASSIGNEE (B) RESIDENCE: (CITY and STATE OR COUNTRY)

Please check the appropriate assignee category or categories (will not be printed on the patent) : ❑ Individual ❑ Corporation or other private group entity ❑ Government

4a. The following fee(s) are submitted:

❑ Issue Fee
❑ Publication Fee (No small entity discount permitted)
❑ Advance Order - # of Copies _____

4b. Payment of Fee(s): **(Please first reapply any previously paid issue fee shown above)**

❑ A check is enclosed.
❑ Payment by credit card. Form PTO-2038 is attached.
❑ The Director is hereby authorized to charge the required fee(s), any deficiency, or credit any overpayment, to Deposit Account Number _____ (enclose an extra copy of this form).

5. **Change in Entity Status** (from status indicated above)

❑ Applicant certifying micro entity status. See 37 CFR 1.29	NOTE: Absent a valid certification of Micro Entity Status (see form PTO/SB/15A and 15B), issue fee payment in the micro entity amount will not be accepted at the risk of application abandonment.
❑ Applicant asserting small entity status. See 37 CFR 1.27	NOTE: If the application was previously under micro entity status, checking this box will be taken to be a notification of loss of entitlement to micro entity status.
❑ Applicant changing to regular undiscounted fee status.	NOTE: Checking this box will be taken to be a notification of loss of entitlement to small or micro entity status, as applicable.

NOTE: The Issue Fee and Publication Fee (if required) will not be accepted from anyone other than the applicant; a registered attorney or agent; or the assignee or other party in interest as shown by the records of the United States Patent and Trademark Office.

Authorized Signature _____ Date _____

Typed or printed name _____ Registration No. _____

This collection of information is required by 37 CFR 1.311. The information is required to obtain or retain a benefit by the public which is to file (and by the USPTO to process) an application. Confidentiality is governed by 35 U.S.C. 122 and 37 CFR 1.14. This collection is estimated to take 12 minutes to complete, including gathering, preparing, and submitting the completed application form to the USPTO. Time will vary depending upon the individual case. Any comments on the amount of time you require to complete this form and/or suggestions for reducing this burden, should be sent to the Chief Information Officer, U.S. Patent and Trademark Office, U.S. Department of Commerce, P.O. Box 1450, Alexandria, Virginia 22313-1450. DO NOT SEND FEES OR COMPLETED FORMS TO THIS ADDRESS. SEND TO: Commissioner for Patents, P.O. Box 1450, Alexandria, Virginia 22313-1450.

Under the Paperwork Reduction Act of 1995, no persons are required to respond to a collection of information unless it displays a valid OMB control number.

UNITED STATES PATENT AND TRADEMARK OFFICE

UNITED STATES DEPARTMENT OF COMMERCE
United States Patent and Trademark Office
Address: COMMISSIONER FOR PATENTS
P.O. Box 1450
Alexandria, Virginia 22313-1450
www.uspto.gov

APPLICATION NO.	FILING DATE	FIRST NAMED INVENTOR	ATTORNEY DOCKET NO.	CONFIRMATION NO.
12/789,538	05/28/2010	Robert Paul Morris	0147-SP	8814

92924 7590 08/16/2013
Small Pond Associates, LLC
Robert Paul Morris
712 Latta Street
Raleigh, NC 27607

EXAMINER
CONAWAY, JAMES E

ART UNIT	PAPER NUMBER
2454	

DATE MAILED: 08/16/2013

Determination of Patent Term Adjustment under 35 U.S.C. 154 (b)
(application filed on or after May 29, 2000)

The Patent Term Adjustment to date is 579 day(s). If the issue fee is paid on the date that is three months after the mailing date of this notice and the patent issues on the Tuesday before the date that is 28 weeks (six and a half months) after the mailing date of this notice, the Patent Term Adjustment will be 579 day(s).

If a Continued Prosecution Application (CPA) was filed in the above-identified application, the filing date that determines Patent Term Adjustment is the filing date of the most recent CPA.

Applicant will be able to obtain more detailed information by accessing the Patent Application Information Retrieval (PAIR) WEB site (http://pair.uspto.gov).

Any questions regarding the Patent Term Extension or Adjustment determination should be directed to the Office of Patent Legal Administration at (571)-272-7702. Questions relating to issue and publication fee payments should be directed to the Customer Service Center of the Office of Patent Publication at 1-(888)-786-0101 or (571)-272-4200.

Privacy Act Statement

The Privacy Act of 1974 (P.L. 93-579) requires that you be given certain information in connection with your submission of the attached form related to a patent application or patent. Accordingly, pursuant to the requirements of the Act, please be advised that: (1) the general authority for the collection of this information is 35 U.S.C. 2(b)(2); (2) furnishing of the information solicited is voluntary; and (3) the principal purpose for which the information is used by the U.S. Patent and Trademark Office is to process and/or examine your submission related to a patent application or patent. If you do not furnish the requested information, the U.S. Patent and Trademark Office may not be able to process and/or examine your submission, which may result in termination of proceedings or abandonment of the application or expiration of the patent.

The information provided by you in this form will be subject to the following routine uses:

1. The information on this form will be treated confidentially to the extent allowed under the Freedom of Information Act (5 U.S.C. 552) and the Privacy Act (5 U.S.C 552a). Records from this system of records may be disclosed to the Department of Justice to determine whether disclosure of these records is required by the Freedom of Information Act.
2. A record from this system of records may be disclosed, as a routine use, in the course of presenting evidence to a court, magistrate, or administrative tribunal, including disclosures to opposing counsel in the course of settlement negotiations.
3. A record in this system of records may be disclosed, as a routine use, to a Member of Congress submitting a request involving an individual, to whom the record pertains, when the individual has requested assistance from the Member with respect to the subject matter of the record.
4. A record in this system of records may be disclosed, as a routine use, to a contractor of the Agency having need for the information in order to perform a contract. Recipients of information shall be required to comply with the requirements of the Privacy Act of 1974, as amended, pursuant to 5 U.S.C. 552a(m).
5. A record related to an International Application filed under the Patent Cooperation Treaty in this system of records may be disclosed, as a routine use, to the International Bureau of the World Intellectual Property Organization, pursuant to the Patent Cooperation Treaty.
6. A record in this system of records may be disclosed, as a routine use, to another federal agency for purposes of National Security review (35 U.S.C. 181) and for review pursuant to the Atomic Energy Act (42 U.S.C. 218(c)).
7. A record from this system of records may be disclosed, as a routine use, to the Administrator, General Services, or his/her designee, during an inspection of records conducted by GSA as part of that agency's responsibility to recommend improvements in records management practices and programs, under authority of 44 U.S.C. 2904 and 2906. Such disclosure shall be made in accordance with the GSA regulations governing inspection of records for this purpose, and any other relevant (i.e., GSA or Commerce) directive. Such disclosure shall not be used to make determinations about individuals.
8. A record from this system of records may be disclosed, as a routine use, to the public after either publication of the application pursuant to 35 U.S.C. 122(b) or issuance of a patent pursuant to 35 U.S.C. 151. Further, a record may be disclosed, subject to the limitations of 37 CFR 1.14, as a routine use, to the public if the record was filed in an application which became abandoned or in which the proceedings were terminated and which application is referenced by either a published application, an application open to public inspection or an issued patent.
9. A record from this system of records may be disclosed, as a routine use, to a Federal, State, or local law enforcement agency, if the USPTO becomes aware of a violation or potential violation of law or regulation.

Notice of Allowability	Application No. 12/789,538	Applicant(s) MORRIS, ROBERT PAUL	
	Examiner JAMES CONAWAY	Art Unit 2454	AIA (First Inventor to File) Status No

-- The MAILING DATE of this communication appears on the cover sheet with the correspondence address--

All claims being allowable, PROSECUTION ON THE MERITS IS (OR REMAINS) CLOSED in this application. If not included herewith (or previously mailed), a Notice of Allowance (PTOL-85) or other appropriate communication will be mailed in due course. **THIS NOTICE OF ALLOWABILITY IS NOT A GRANT OF PATENT RIGHTS.** This application is subject to withdrawal from issue at the initiative of the Office or upon petition by the applicant. See 37 CFR 1.313 and MPEP 1308.

1. ☒ This communication is responsive to *the communication filed 22 July 2013*.
   ☐ A declaration(s)/affidavit(s) under **37 CFR 1.130(b)** was/were filed on_____.
2. ☐ An election was made by the applicant in response to a restriction requirement set forth during the interview on _____; the restriction requirement and election have been incorporated into this action.
3. ☐ The allowed claim(s) is/are *1,4,11,12 and 17-33*. As a result of the allowed claim(s), you may be eligible to benefit from the **Patent Prosecution Highway** program at a participating intellectual property office for the corresponding application. For more information, please see http://www.uspto.gov/patents/init_events/pph/index.jsp or send an inquiry to PPHfeedback@uspto.gov .
4. ☐ Acknowledgment is made of a claim for foreign priority under 35 U.S.C. § 119(a)-(d) or (f).
   Certified copies:
   a) ☐ All b) ☐ Some *c) ☐ None of the:
   1. ☐ Certified copies of the priority documents have been received.
   2. ☐ Certified copies of the priority documents have been received in Application No. _____ .
   3. ☐ Copies of the certified copies of the priority documents have been received in this national stage application from the International Bureau (PCT Rule 17.2(a)).

   * Certified copies not received: _____.

Applicant has THREE MONTHS FROM THE "MAILING DATE" of this communication to file a reply complying with the requirements noted below. Failure to timely comply will result in ABANDONMENT of this application.
THIS THREE-MONTH PERIOD IS NOT EXTENDABLE.

5. ☐ CORRECTED DRAWINGS (as "replacement sheets") must be submitted.
   ☐ including changes required by the attached Examiner's Amendment / Comment or in the Office action of Paper No./Mail Date _____.

   Identifying indicia such as the application number (see 37 CFR 1.84(c)) should be written on the drawings in the front (not the back) of each sheet. Replacement sheet(s) should be labeled as such in the header according to 37 CFR 1.121(d).
6. ☐ DEPOSIT OF and/or INFORMATION about the deposit of BIOLOGICAL MATERIAL must be submitted. Note the attached Examiner's comment regarding REQUIREMENT FOR THE DEPOSIT OF BIOLOGICAL MATERIAL.

Attachment(s)

1. ☒ Notice of References Cited (PTO-892)
2. ☐ Information Disclosure Statements (PTO/SB/08), Paper No./Mail Date _____
3. ☐ Examiner's Comment Regarding Requirement for Deposit of Biological Material
4. ☐ Interview Summary (PTO-413), Paper No./Mail Date _____ .
5. ☒ Examiner's Amendment/Comment
6. ☒ Examiner's Statement of Reasons for Allowance
7. ☐ Other _____.

/JAMES E CONAWAY/ Examiner, Art Unit 2454	/Joseph E. Avellino/ Supervisory Patent Examiner, Art Unit 2454

EXAMINER'S AMENDMENT

1. An examiner's amendment to the record appears below. Should the changes and/or additions be unacceptable to applicant, an amendment may be filed as provided by 37 CFR 1.312. To ensure consideration of such an amendment, it MUST be submitted no later than the payment of the issue fee.

Authorization for this examiner's amendment was given in a telephone interview with Robert Paul Morris on 05 August 2013.

Amend the claims as follows:

1. (Currently Amended) A method for processing an attached command response based on a markup element, the method comprising:

sending, by a server node via a network to a user agent node, a first resource including a first attach markup element defined by a markup language as an indication that at least a portion of a first command response to a first command identified by a first HTTP request-line in a first HTTP message is includ<u>ed</u>[[able]] in a second HTTP response message to a HTTP second request message including a second HTTP request-line identifying a second command;

receiving, by the server node via the network from the user agent node, the first HTTP request message and receiving, by the server node via the network from the user agent node, the second HTTP request message; and

based on the indication, sending, by the server node to the user agent node in

the second HTTP response message command, the at least a portion of a first command response.

12. (Currently Amended) A method for processing an attached command response based on a markup element, the method comprising:

receiving, by a user agent node via a network from a server node, a first resource including a first attach markup element defined by a markup language as an indication that at least a portion of a first command response to a first command identified by a first HTTP request-line in a first HTTP request message is included[[able]] in a second HTTP response message to a HTTP second request message including a second HTTP request-line identifying a second command;

sending, by the user agent node via the network to the server node, the first HTTP request message and sending the second HTTP request message; and

based on the first markup element, receiving, in the second HTTP response message, the at least a portion of the first command response for the first command.

18. (Currently Amended) A system for processing an attached command response based on a markup element, the system comprising:

an execution environment including a processor that executes an instruction included in at least one of a resource generator component, a request-in component, an attach director component, and a response-out component;

the resource generator component is included in the execution environment for

sending, by a server node via a network to a user agent node, a first resource including a first attach markup element defined by a markup language as an indication that at least a portion of a first command response to a first command identified by a first HTTP request-line in a first HTTP message is included[[able]] in a second HTTP response message to a HTTP second request message including a second HTTP request-line identifying a second command;

the request-in component is included in the execution environment for receiving, by the server node via the network from the user agent node, the first HTTP request message and receiving, by the server node via the network from the user agent node, the second HTTP request message; and

the response-out component is included in the execution environment for, based on the indication, sending, by the server node to the user agent node in the second HTTP response message, the at least a portion of a first command response.

19. (Currently Amended) A system for processing an attached command response based on a markup element, the system comprising:

an execution environment including a processor that executes an instruction included in at least one of a markup content handler component, a request-out component, and an attached response component;

the markup content handler component is included in the execution environment for receiving, by a user agent node via a network from a server node, a first resource including a first attach markup element defined by a markup language as an indication

that at least a portion of a first command response to a first command identified by a first HTTP request-line in a first HTTP request message is included[[able]] in a second HTTP response message to a HTTP second request message including a second HTTP request-line identifying a second command;

the request-out component is included in the execution environment for sending, by the user agent node via the network to the server node, the first HTTP request message and sending the second HTTP request message and

the attached response component is included in the execution environment for, based on the first markup element, receiving, in the second HTTP response-message, the at least a portion of the first command response for the first command.

20. (Currently Amended) A non-transitory computer readable medium embodying a computer program, executable by a machine, for processing an attached command response based on a markup element, the computer program comprising executable instructions for:

sending, by a server node via a network to a user agent node, a first resource including a first attach markup element defined by a markup language as an indication that at least a portion of a first command response to a first command identified by a first HTTP request-line in a first HTTP message is included[[able]] in a second HTTP response message to a HTTP second request message including a second HTTP request-line identifying a second command;

receiving, by the server node via the network from the user agent node, the first

HTTP request message and receiving, by the server node via the network from the user agent node, the second HTTP request message; and

based on the indication, sending, by the server node to the user agent node in the second HTTP response message the at least a portion of a first command response.

21. (Currently Amended) A non-transitory computer readable medium embodying a computer program, executable by a machine, for processing an attached command response based on a markup element, the computer program comprising executable instructions for:

receiving, by a user agent node via a network from a server node, a first resource including a first attach markup element defined by a markup language as an indication that at least a portion of a first command response to a first command identified by a first HTTP request-line in a first HTTP request message is included[[able]] in a second HTTP response message to a HTTP second request message including a second HTTP request-line identifying a second command;

sending, by the user agent node via the network to the server node, the first HTTP request message and sending the second HTTP request message and

based on the first markup element, receiving, in the second HTTP response message, the at least a portion of the first command response for the first command.

Reasons for Allowance

2. The following is an examiner's statement of reasons for allowance: The claims have been amended to recite that user-agent node receives a resource having an attach markup element defined by a markup language as an indication that first and second request can both be responded to in a response to the second request. While Examiner maintains that it would be obvious to modify HTTP to employ combined responses, it would not have been obvious to implement that functionality in the specific way recited in the independent claims. The claims now require that this functionality is part of a markup element defined in the markup language. As no markup language in the art contains an element returnable to a user-agent that indicates this specific type of functionality, forming a rejection for the claimed invention would invariably require impermissible hindsight reasoning. Accordingly, the case is being passed to issue.

All double-patenting issues have been obviated by terminal disclaimer or are moot as the applications remain pending.

Any comments considered necessary by applicant must be submitted no later than the payment of the issue fee and, to avoid processing delays, should preferably accompany the issue fee. Such submissions should be clearly labeled "Comments on Statement of Reasons for Allowance."

Conclusion

Any inquiry concerning this communication or earlier communications from the examiner should be directed to JAMES CONAWAY whose telephone number is (571)270-5640. The examiner can normally be reached on Monday - Friday 8:30-5:00.

If attempts to reach the examiner by telephone are unsuccessful, the examiner's supervisor, JOSEPH AVELLINO can be reached on 571-272-3905. The fax phone number for the organization where this application or proceeding is assigned is 571-273-8300.

Information regarding the status of an application may be obtained from the Patent Application Information Retrieval (PAIR) system. Status information for published applications may be obtained from either Private PAIR or Public PAIR. Status information for unpublished applications is available through Private PAIR only. For more information about the PAIR system, see http://pair-direct.uspto.gov. Should you have questions on access to the Private PAIR system, contact the Electronic Business Center (EBC) at 866-217-9197 (toll-free). If you would like assistance from a USPTO Customer Service Representative or access to the automated information system, call 800-786-9199 (IN USA OR CANADA) or 571-272-1000.

/J. C./
Examiner, Art Unit 2454

/Joseph E. Avellino/
Supervisory Patent Examiner, Art Unit 2454

Notice of References Cited	Application/Control No. 12/789,538	Applicant(s)/Patent Under Reexamination MORRIS, ROBERT PAUL	
	Examiner JAMES CONAWAY	Art Unit 2454	Page 1 of 1

U.S. PATENT DOCUMENTS

*		Document Number Country Code-Number-Kind Code	Date MM-YYYY	Name	Classification
*	A	US-2008/0028086 A1	01-2008	Chetuparambil et al.	709/230
*	B	US-2012/0166526 A1	06-2012	Ambardekar, Amit Ashok	709/203
	C	US-			
	D	US-			
	E	US-			
	F	US-			
	G	US-			
	H	US-			
	I	US-			
	J	US-			
	K	US-			
	L	US-			
	M	US-			

FOREIGN PATENT DOCUMENTS

*		Document Number Country Code-Number-Kind Code	Date MM-YYYY	Country	Name	Classification
	N					
	O					
	P					
	Q					
	R					
	S					
	T					

NON-PATENT DOCUMENTS

*		Include as applicable: Author, Title Date, Publisher, Edition or Volume, Pertinent Pages)
	U	
	V	
	W	
	X	

*A copy of this reference is not being furnished with this Office action. (See MPEP § 707.05(a).)
Dates in MM-YYYY format are publication dates. Classifications may be US or foreign.

OK TO ENTER: /J.C./

IN THE UNITED STATES PATENT AND TRADEMARK OFFICE

In re Patent Application of:

Robert Paul Morris

Application No.: 12/789,538

Filed: May 29, 2010

For: Method, Systems, and Computer Program Products for Processing an Attached Command Response Based on a Markup Element

Mail Stop: Amendment

T.C./Art Unit: 2454

Office: Conaway, James E

Confirmation No.: 8814

* *

RESPONSE AFTER FINAL REJECTION UNDER 37 C.F.R. §1.116

Mail Stop: Amendment
Commissioner for Patents
P.O. Box 1450
Alexandria, VA 22313-1450

Sir:

This paper is responsive to the final Office Action mailed June 27, 2013, for which a shortened statutory period for reply is set to expire on September 27, 2013.

Applicant requests consideration of his paper under AFCP 2.0. Applicant is willing and available to participate in any interview initiated by the Office concerning this response. Applicant/Inventor respectfully requests that the Office favorably consider the following remarks.

Amendments to the Specification begin on page 2 of this paper.

Amendments to the Claims are reflected in the Listing of Claims that begins on page 3 of this paper.

Remarks begin on page 10 of this paper.

/J.C./ 08/08/2013

Issue Classification	Application/Control No.	Applicant(s)/Patent Under Reexamination
	12789538	MORRIS, ROBERT PAUL
	Examiner	**Art Unit**
	JAMES CONAWAY	2454

CPC						
Symbol					**Type**	**Version**

CPC Combination Sets								
Symbol					**Type**	**Set**	**Ranking**	**Version**

/JAMES CONAWAY/ Examiner.Art Unit 2454 (Assistant Examiner)	08/05/2013 (Date)	**Total Claims Allowed:** 21	
/JOSEPH AVELLINO/ Supervisory Patent Examiner.Art Unit 2454 (Primary Examiner)	08/06/2013 (Date)	O.G. Print Claim(s) 1	O.G. Print Figure 2b

Issue Classification	Application/Control No.	Applicant(s)/Patent Under Reexamination
	12789538	MORRIS, ROBERT PAUL
	Examiner	**Art Unit**
	JAMES CONAWAY	2454

US ORIGINAL CLASSIFICATION		INTERNATIONAL CLASSIFICATION									
CLASS	SUBCLASS	CLAIMED					NON-CLAIMED				
709	203	G	0	6	F	15 / 16 (2006.0)					

CROSS REFERENCE(S)					
CLASS	SUBCLASS (ONE SUBCLASS PER BLOCK)				
709	230				
715	200				

/JAMES CONAWAY/ Examiner.Art Unit 2454 (Assistant Examiner)	08/05/2013 (Date)	**Total Claims Allowed:** 21	
/JOSEPH AVELLINO/ Supervisory Patent Examiner.Art Unit 2454 (Primary Examiner)	08/06/2013 (Date)	O.G. Print Claim(s) 1	O.G. Print Figure 2b

Issue Classification	Application/Control No.	Applicant(s)/Patent Under Reexamination
	12789538	MORRIS, ROBERT PAUL
	Examiner	**Art Unit**
	JAMES CONAWAY	2454

☒ **Claims renumbered in the same order as presented by applicant** ☐ **CPA** ☒ **T.D.** ☐ **R.1.47**

Final	Original	Final	Original	Final	Original	Final	Original	Final	Original	Final	Original	Final	Original	Final	Original

/JAMES CONAWAY/ Examiner.Art Unit 2454 (Assistant Examiner)	08/05/2013 (Date)	**Total Claims Allowed:** 21	
/JOSEPH AVELLINO/ Supervisory Patent Examiner.Art Unit 2454 (Primary Examiner)	08/06/2013 (Date)	O.G. Print Claim(s) 1	O.G. Print Figure 2b

Search Notes	Application/Control No.	Applicant(s)/Patent Under Reexamination
	12789538	MORRIS, ROBERT PAUL
	Examiner	**Art Unit**
	JAMES CONAWAY	2454

CPC- SEARCHED

Symbol	Date	Examiner

CPC COMBINATION SETS - SEARCHED

Symbol	Date	Examiner

US CLASSIFICATION SEARCHED

Class	Subclass	Date	Examiner
709	203, 230	8/5/2013	JC
715	200	8/5/2013	JC

SEARCH NOTES

Search Notes	Date	Examiner
EAST Inventor & Assignee Search	8/5/2013	JC
EAST class-limited search	8/5/2013	JC
EAST text-based search	8/5/2013	JC
Consulted with SPE Joe Avellino re: allowability	8/5/2013	JC

INTERFERENCE SEARCH

US Class/ CPC Symbol	US Subclass / CPC Group	Date	Examiner

EAST Search History

EAST Search History (Prior Art)

Ref #	Hits	Search Query	DBs	Default Operator	Plurals	Time Stamp
L2	29	morris.in. AND (http AND response).clm.	US-PGPUB; USPAT; USOCR; FPRS; EPO; JPO; DERWENT; IBM_TDB	OR	ON	2013/08/05 15:39
L3	36	morris.in. AND (http).clm.	US-PGPUB; USPAT; USOCR; FPRS; EPO; JPO; DERWENT; IBM_TDB	OR	ON	2013/08/05 15:39
L4	2147	morris.in. AND (http (response request)).clm.	US-PGPUB; USPAT; USOCR; FPRS; EPO; JPO; DERWENT; IBM_TDB	OR	ON	2013/08/05 15:40
L10	654	(aggregat$3 combin$3) near2 (respon$3 reply$3) same (HTTP web HTML markup XML)	US-PGPUB; USPAT; USOCR; FPRS; EPO; JPO; DERWENT; IBM_TDB	OR	ON	2013/08/05 15:51
L11	103	10 same (element tag attribute)	US-PGPUB; USPAT; USOCR; FPRS; EPO; JPO; DERWENT; IBM_TDB	OR	ON	2013/08/05 15:52
L12	2	"US 20110295932"	US-PGPUB; USPAT; USOCR; FPRS; EPO; JPO; DERWENT; IBM_TDB	OR	ON	2013/08/05 15:52
L13	6	US-7587450-$.DID. OR US-20070150814-$.DID. OR US-20090254627-$.DID. OR US-20090144753-$.DID. OR US-20080077653-$.DID. OR US-20070005725-$.DID.	US-PGPUB; USPAT; USOCR; JPO	OR	ON	2013/08/05 15:52
L14	124	(HTTP XML SOAP) near3 (request message) same (attach$3 attachment) near3 (element node attribute)	US-PGPUB; USPAT; USOCR; FPRS; EPO; JPO; DERWENT; IBM_TDB	OR	ON	2013/08/05 15:52
L15	38110	morris.in.	US-PGPUB; USPAT; USOCR; FPRS; EPO; JPO; DERWENT; IBM_TDB	OR	ON	2013/08/05 15:52
L16	21400	709/203.ccls.	US-PGPUB; USPAT; USOCR; FPRS; EPO; JPO; DERWENT;	OR	ON	2013/08/05 15:52

			IBM_TDB			
L17	66867	(aggregat$3 combin$3 combination embed embedd$3) near3 (request messag$3)	US-PGPUB; USPAT; USOCR; FPRS; EPO; JPO; DERWENT; IBM_TDB	OR	ON	2013/08/05 15:52
L18	5	L17 same L14	US-PGPUB; USPAT; USOCR; FPRS; EPO; JPO; DERWENT; IBM_TDB	OR	ON	2013/08/05 15:52
L19	10740	(HTTP XML SOAP) near3 (request message) same (element node attribute)	US-PGPUB; USPAT; USOCR; FPRS; EPO; JPO; DERWENT; IBM_TDB	OR	ON	2013/08/05 15:52
L20	66867	(aggregat$3 combin$3 combination embed embedd$3) near3 (request messag$3)	US-PGPUB; USPAT; USOCR; FPRS; EPO; JPO; DERWENT; IBM_TDB	OR	ON	2013/08/05 15:52
L21	207	L19 same L20	US-PGPUB; USPAT; USOCR; FPRS; EPO; JPO; DERWENT; IBM_TDB	OR	ON	2013/08/05 15:52
L22	55	L21 same (response respond$3)	US-PGPUB; USPAT; USOCR; FPRS; EPO; JPO; DERWENT; IBM_TDB	OR	ON	2013/08/05 15:52
L23	38110	morris.in.	US-PGPUB; USPAT; USOCR; FPRS; EPO; JPO; DERWENT; IBM_TDB	OR	ON	2013/08/05 15:52
L24	124	(HTTP XML SOAP) near3 (request message) same (attach$3 attachment) near3 (element node attribute)	US-PGPUB; USPAT; USOCR; FPRS; EPO; JPO; DERWENT; IBM_TDB	OR	ON	2013/08/05 15:52
L25	5	L23 and L24	US-PGPUB; USPAT; USOCR; FPRS; EPO; JPO; DERWENT; IBM_TDB	OR	ON	2013/08/05 15:52
L26	2	"20040148328".pn.	US-PGPUB; USPAT; USOCR; FPRS; EPO; JPO; DERWENT; IBM_TDB	OR	ON	2013/08/05 15:52
L27	2	"20080155016".pn.	US-PGPUB; USPAT; USOCR; FPRS; EPO; JPO; DERWENT; IBM_TDB	OR	ON	2013/08/05 15:52
L28	262	(HTTP XML SOAP) near3 (request message) same (attach$3 attachment) near3 (element node attribute markup tag meta	US-PGPUB; USPAT; USOCR; FPRS; EPO; JPO; DERWENT;	OR	ON	2013/08/05 15:52

		metadata)	IBM_TDB			
L29	42	L28 same (respond$3 response)	US-PGPUB; USPAT; USOCR; FPRS; EPO; JPO; DERWENT; IBM_TDB	OR	ON	2013/08/05 15:52
L30	3	"6401131".pn.	US-PGPUB; USPAT; USOCR; FPRS; EPO; JPO; DERWENT; IBM_TDB	OR	ON	2013/08/05 15:52
L31	6	US-20040148328-$.DID. OR US-20080155016-$.DID. OR US-20060023652-$.DID. OR US-20050060427-$.DID. OR US-1331018-$.DID.	US-PGPUB; USPAT; USOCR; JPO	OR	ON	2013/08/05 15:52
L32	2	"20030009545".pn.	US-PGPUB; USPAT; USOCR; FPRS; EPO; JPO; DERWENT; IBM_TDB	OR	ON	2013/08/05 15:52
L33	217	(attach attachable).clm. AND morris.in.	US-PGPUB; USPAT; USOCR; FPRS; EPO; JPO; DERWENT; IBM_TDB	OR	ON	2013/08/05 15:52
L34	1	(attach attachable).clm. AND (markup adj element).clm. AND morris.in.	US-PGPUB; USPAT; USOCR; FPRS; EPO; JPO; DERWENT; IBM_TDB	OR	ON	2013/08/05 15:52
L35	3	"6401131".pn.	US-PGPUB; USPAT; USOCR; FPRS; EPO; JPO; DERWENT; IBM_TDB	OR	ON	2013/08/05 15:52
L36	2	"20100156889".pn.	US-PGPUB; USPAT; USOCR; FPRS; EPO; JPO; DERWENT; IBM_TDB	OR	ON	2013/08/05 15:52

EAST Search History (Interference)

Ref #	Hits	Search Query	DBs	Default Operator	Plurals	Time Stamp
L5	24744	709/203,230.ccls.	US-PGPUB; USPAT; UPAD	OR	ON	2013/08/05 15:44
L6	923	715/200.ccls.	US-PGPUB; USPAT; UPAD	OR	ON	2013/08/05 15:44
L7	70	((aggregat$3 combin$3) near2 (respon$3 reply$3) same (HTTP web HTML markup XML)).clm.	US-PGPUB; USPAT; UPAD	OR	ON	2013/08/05 15:45
L8	17	7 and 5	US-PGPUB; USPAT; UPAD	OR	ON	2013/08/05 15:48
L9	0	7 and 6	US-PGPUB;	OR	ON	2013/08/05

			USPAT; UPAD			15:48
L37	1	Morris.in. AND ((attach$3 attachable) AND HTTP AND request$3 AND respon$4).clm.	USPAT	OR	ON	2013/08/05 15:52

8/5/2013 3:59:27 PM
C:\Users\jconaway\Documents\EAST\Workspaces\12789538.wsp

PTO/SB/06 (09-11)
Approved for use through 1/31/2014. OMB 0651-0032
U.S. Patent and Trademark Office; U.S. DEPARTMENT OF COMMERCE
Under the Paperwork Reduction Act of 1995, no persons are required to respond to a collection of information unless it displays a valid OMB control number.

PATENT APPLICATION FEE DETERMINATION RECORD Substitute for Form PTO-875	Application or Docket Number 12/789,538	Filing Date 05/28/2010	☐ To be Mailed

ENTITY: ☐ LARGE ☒ SMALL ☐ MICRO

APPLICATION AS FILED – PART I

FOR	(Column 1) NUMBER FILED	(Column 2) NUMBER EXTRA	RATE ($)	FEE ($)
☐ BASIC FEE (37 CFR 1.16(a), (b), or (c))	N/A	N/A	N/A	
☐ SEARCH FEE (37 CFR 1.16(k), (i), or (m))	N/A	N/A	N/A	
☐ EXAMINATION FEE (37 CFR 1.16(o), (p), or (q))	N/A	N/A	N/A	
TOTAL CLAIMS (37 CFR 1.16(i))	minus 20 =	*	X $ =	
INDEPENDENT CLAIMS (37 CFR 1.16(h))	minus 3 =	*	X $ =	
☐ APPLICATION SIZE FEE (37 CFR 1.16(s))	If the specification and drawings exceed 100 sheets of paper, the application size fee due is $310 ($155 for small entity) for each additional 50 sheets or fraction thereof. See 35 U.S.C. 41(a)(1)(G) and 37 CFR 1.16(s).			
☐ MULTIPLE DEPENDENT CLAIM PRESENT (37 CFR 1.16(j))				
* If the difference in column 1 is less than zero, enter "0" in column 2.			TOTAL	

APPLICATION AS AMENDED – PART II

AMENDMENT	08/06/2013	(Column 1) CLAIMS REMAINING AFTER AMENDMENT		(Column 2) HIGHEST NUMBER PREVIOUSLY PAID FOR	(Column 3) PRESENT EXTRA	RATE ($)	ADDITIONAL FEE ($)
	Total (37 CFR 1.16(i))	* 21	Minus	** 21	= 0	X $40 =	0
	Independent (37 CFR 1.16(h))	* 6	Minus	***6	= 0	X $210 =	0
	☐ Application Size Fee (37 CFR 1.16(s))						
	☐ FIRST PRESENTATION OF MULTIPLE DEPENDENT CLAIM (37 CFR 1.16(j))						
						TOTAL ADD'L FEE	**0**

AMENDMENT		(Column 1) CLAIMS REMAINING AFTER AMENDMENT		(Column 2) HIGHEST NUMBER PREVIOUSLY PAID FOR	(Column 3) PRESENT EXTRA	RATE ($)	ADDITIONAL FEE ($)
	Total (37 CFR 1.16(i))	*	Minus	**	=	X $ =	
	Independent (37 CFR 1.16(h))	*	Minus	***	=	X $ =	
	☐ Application Size Fee (37 CFR 1.16(s))						
	☐ FIRST PRESENTATION OF MULTIPLE DEPENDENT CLAIM (37 CFR 1.16(j))						
						TOTAL ADD'L FEE	

* If the entry in column 1 is less than the entry in column 2, write "0" in column 3.
** If the "Highest Number Previously Paid For" IN THIS SPACE is less than 20, enter "20".
*** If the "Highest Number Previously Paid For" IN THIS SPACE is less than 3, enter "3".
The "Highest Number Previously Paid For" (Total or Independent) is the highest number found in the appropriate box in column 1.

LIE
/DONNA 1. SMALLS LOGAN/

This collection of information is required by 37 CFR 1.16. The information is required to obtain or retain a benefit by the public which is to file (and by the USPTO to process) an application. Confidentiality is governed by 35 U.S.C. 122 and 37 CFR 1.14. This collection is estimated to take 12 minutes to complete, including gathering, preparing, and submitting the completed application form to the USPTO. Time will vary depending upon the individual case. Any comments on the amount of time you require to complete this form and/or suggestions for reducing this burden, should be sent to the Chief Information Officer, U.S. Patent and Trademark Office, U.S. Department of Commerce, P.O. Box 1450, Alexandria, VA 22313-1450. DO NOT SEND FEES OR COMPLETED FORMS TO THIS ADDRESS. **SEND TO: Commissioner for Patents, P.O. Box 1450, Alexandria, VA 22313-1450.**
If you need assistance in completing the form, call 1-800-PTO-9199 and select option 2.

Doc Code: DIST.E.FILE Document Description: Electronic Terminal Disclaimer - Filed	PTO/SB/26 U.S. Patent and Trademark Office Department of Commerce

Electronic Petition Request	**TERMINAL DISCLAIMER TO OBVIATE A DOUBLE PATENTING REJECTION OVER A "PRIOR" PATENT**
Application Number	12789538
Filing Date	28-May-2010
First Named Inventor	Robert Morris
Attorney Docket Number	0147-SP
Title of Invention	METHODS, SYSTEMS, AND COMPUTER PROGRAM PRODUCTS FOR PROCESSING AN ATTACHED COMMAND RESPONSE BASED ON A MARKUP ELEMENT

☒ Filing of terminal disclaimer does not obviate requirement for response under 37 CFR 1.111 to outstanding Office Action

☒ This electronic Terminal Disclaimer is not being used for a Joint Research Agreement.

Owner	Percent Interest
Robert Paul Morris	100%

The owner(s) with percent interest listed above in the instant application hereby disclaims, except as provided below, the terminal part of the statutory term of any patent granted on the instant application which would extend beyond the expiration date of the full statutory term of prior patent number(s)

8346853

as the term of said prior patent is presently shortened by any terminal disclaimer. The owner hereby agrees that any patent so granted on the instant application shall be enforceable only for and during such period that it and the prior patent are commonly owned. This agreement runs with any patent granted on the instant application and is binding upon the grantee, its successors or assigns.

In making the above disclaimer, the owner does not disclaim the terminal part of the term of any patent granted on the instant application that would extend to the expiration date of the full statutory term of the prior patent, "as the term of said prior patent is presently shortened by any terminal disclaimer," in the event that said prior patent later:
- expires for failure to pay a maintenance fee;
- is held unenforceable;
- is found invalid by a court of competent jurisdiction;
- is statutorily disclaimed in whole or terminally disclaimed under 37 CFR 1.321;
- has all claims canceled by a reexamination certificate;
- is reissued; or
- is in any manner terminated prior to the expiration of its full statutory term as presently shortened by any terminal disclaimer.

◉ Terminal disclaimer fee under 37 CFR 1.20(d) is included with Electronic Terminal Disclaimer request.

○	I certify, in accordance with 37 CFR 1.4(d)(4), that the terminal disclaimer fee under 37 CFR 1.20(d) required for this terminal disclaimer has already been paid in the above-identified application.

○ Applicant claims SMALL ENTITY status. See 37 CFR 1.27.

○ Applicant is no longer claiming SMALL ENTITY status. See 37 CFR 1.27(g)(2).

◉ Applicant(s) status remains as SMALL ENTITY.

○ Applicant(s) status remains as other than SMALL ENTITY.

I hereby declare that all statements made herein of my own knowledge are true and that all statements made on information and belief are believed to be true; and further that these statements were made with the knowledge that willful false statements and the like so made are punishable by fine or imprisonment, or both, under Section 1001 of Title 18 of the United States Code and that such willful false statements may jeopardize the validity of the application or any patent issued thereon.

THIS PORTION MUST BE COMPLETED BY THE SIGNATORY OR SIGNATORIES

I certify, in accordance with 37 CFR 1.4(d)(4) that I am:

○ An attorney or agent registered to practice before the Patent and Trademark Office who is of record in this application

Registration Number _____

◉ A sole inventor

○ A joint inventor; I certify that I am authorized to sign this submission on behalf of all of the inventors

○ A joint inventor; all of whom are signing this request

○ The assignee of record of the entire interest that has properly made itself of record pursuant to 37 CFR 3.71

Signature	/Robert Paul Morris/
Name	Robert Paul Morris

*Statement under 37 CFR 3.73(b) is required if terminal disclaimer is signed by the assignee (owner).
Form PTO/SB/96 may be used for making this certification. See MPEP § 324.

Electronic Patent Application Fee Transmittal

Application Number:	12789538
Filing Date:	28-May-2010
Title of Invention:	METHODS, SYSTEMS, AND COMPUTER PROGRAM PRODUCTS FOR PROCESSING AN ATTACHED COMMAND RESPONSE BASED ON A MARKUP ELEMENT
First Named Inventor/Applicant Name:	Robert Paul Morris
Filer:	Robert Paul Morris
Attorney Docket Number:	0147-SP

Filed as Small Entity

Utility under 35 USC 111(a) Filing Fees

Description	Fee Code	Quantity	Amount	Sub-Total in USD($)
Basic Filing:				
Statutory or Terminal Disclaimer	1814	1	160	160
Pages:				
Claims:				
Miscellaneous-Filing:				
Petition:				
Patent-Appeals-and-Interference:				
Post-Allowance-and-Post-Issuance:				
Extension-of-Time:				

Description	Fee Code	Quantity	Amount	Sub-Total in USD($)
Miscellaneous:				
			Total in USD ($)	**160**

Doc Code: DISQ.E.FILE
Document Description: Electronic Terminal Disclaimer – Approved

Application No.: 12789538

Filing Date: 28-May-2010

Applicant/Patent under Reexamination: Morris et al.

Electronic Terminal Disclaimer filed on July 22, 2013

☒ APPROVED

This patent is subject to a terminal disclaimer

☐ DISAPPROVED

Approved/Disapproved by: Electronic Terminal Disclaimer automatically approved by EFS-Web

U.S. Patent and Trademark Office

Electronic Acknowledgement Receipt	
EFS ID:	16371901
Application Number:	12789538
International Application Number:	
Confirmation Number:	8814
Title of Invention:	METHODS, SYSTEMS, AND COMPUTER PROGRAM PRODUCTS FOR PROCESSING AN ATTACHED COMMAND RESPONSE BASED ON A MARKUP ELEMENT
First Named Inventor/Applicant Name:	Robert Paul Morris
Customer Number:	92924
Filer:	Robert Paul Morris
Filer Authorized By:	
Attorney Docket Number:	0147-SP
Receipt Date:	22-JUL-2013
Filing Date:	28-MAY-2010
Time Stamp:	07:21:56
Application Type:	Utility under 35 USC 111(a)

Payment information:

Submitted with Payment	yes
Payment Type	Credit Card
Payment was successfully received in RAM	$160
RAM confirmation Number	7973
Deposit Account	505171
Authorized User	MORRIS, ROBERT PAUL
The Director of the USPTO is hereby authorized to charge indicated fees and credit any overpayment as follows: Charge any Additional Fees required under 37 C.F.R. Section 1.17 (Patent application and reexamination processing fees) Charge any Additional Fees required under 37 C.F.R. Section 1.19 (Document supply fees)	

Charge any Additional Fees required under 37 C.F.R. Section 1.21 (Miscellaneous fees and charges)					
File Listing:					
Document Number	**Document Description**	**File Name**	**File Size(Bytes)/ Message Digest**	**Multi Part /.zip**	**Pages (if appl.)**
1	Electronic Terminal Disclaimer-Filed	eTerminal-Disclaimer.pdf	33563 992eef413f3df6be3361cef50ed3c2bff12544fb	no	2
Warnings:					
Information:					
2	Fee Worksheet (SB06)	fee-info.pdf	30214 4594b980417d2e54f419f439195fb5d4d6a75331	no	2
Warnings:					
Information:					
		Total Files Size (in bytes):	63777		

This Acknowledgement Receipt evidences receipt on the noted date by the USPTO of the indicated documents, characterized by the applicant, and including page counts, where applicable. It serves as evidence of receipt similar to a Post Card, as described in MPEP 503.

<u>New Applications Under 35 U.S.C. 111</u>
If a new application is being filed and the application includes the necessary components for a filing date (see 37 CFR 1.53(b)-(d) and MPEP 506), a Filing Receipt (37 CFR 1.54) will be issued in due course and the date shown on this Acknowledgement Receipt will establish the filing date of the application.

<u>National Stage of an International Application under 35 U.S.C. 371</u>
If a timely submission to enter the national stage of an international application is compliant with the conditions of 35 U.S.C. 371 and other applicable requirements a Form PCT/DO/EO/903 indicating acceptance of the application as a national stage submission under 35 U.S.C. 371 will be issued in addition to the Filing Receipt, in due course.

<u>New International Application Filed with the USPTO as a Receiving Office</u>
If a new international application is being filed and the international application includes the necessary components for an international filing date (see PCT Article 11 and MPEP 1810), a Notification of the International Application Number and of the International Filing Date (Form PCT/RO/105) will be issued in due course, subject to prescriptions concerning national security, and the date shown on this Acknowledgement Receipt will establish the international filing date of the application.

IN THE UNITED STATES PATENT AND TRADEMARK OFFICE

In re Patent Application of:	Mail Stop: Amendment
Robert Paul Morris	T.C./Art Unit: 2454
Application No.: 12/789,538	Office: Conaway, James E
Filed: May 29, 2010	Confirmation No.: 8814
For: Method, Systems, and Computer Program Products for Processing an Attached Command Response Based on a Markup Element	

* *

RESPONSE AFTER FINAL REJECTION UNDER 37 C.F.R. §1.116

Mail Stop: Amendment
Commissioner for Patents
P.O. Box 1450
Alexandria, VA 22313-1450

Sir:

This paper is responsive to the final Office Action mailed June 27, 2013, for which a shortened statutory period for reply is set to expire on September 27, 2013.

Applicant requests consideration of his paper under AFCP 2.0. Applicant is willing and available to participate in any interview initiated by the Office concerning this response. Applicant/Inventor respectfully requests that the Office favorably consider the following remarks.

Amendments to the Specification begin on page 2 of this paper.

Amendments to the Claims are reflected in the Listing of Claims that begins on page 3 of this paper.

Remarks begin on page 10 of this paper.

Amendments to the Specification:

Amendments to the Specification:

Note: Amendments to the spec are strikethrough deletions and underline insertions. Only a marked up copy is required.

Please replace paragraphs 0001-0005:

[0001] This application is related to the following commonly owned U.S. Patent ~~Applications~~, the entire disclosure ~~of each~~ being incorporated by reference herein: ~~Application~~ Patent No. ~~12/788,364~~ 8,346,853 (Docket No 0103-SP) filed on 2010/05/27, issued on 2013/01/01, entitled "Methods, Systems, and Program Products for Processing an Attached Command Response";

[0002] This application is related to the following commonly owned U.S. Patent Application: Application No. 13/685,739 (Docket No 0103-SP-C) filed on 2012/11/27, entitled "Methods, Systems, and Program Products for Processing an Attached Command Response", which is a continuation of US Patent 8,346,853.

[0003] This application is related to the following commonly owned U.S. Patent Applications, the entire disclosure of each being incorporated by reference herein: Application No. 12/788,373 (Docket No 0131-SP) filed on 2010/05/27, entitled "Methods, Systems, and Program Products for Preventing Processing of an HTTP Response";

[0004] Application No. 12/789,550 (Docket No 0148-SP) filed on 2010/05/28, entitled "Methods, Systems, and Program Products for Processing a Non-returnable Command Response Based on a Markup Element";

[0005] Application No. 12/788,381 (Docket No 0150-SP) filed on 2010/05/27, entitled "Methods, Systems, and Program Products for Processing a Combined Command Response"; and

[0006] Application No. 12/789,568 (Docket No 0152-SP) filed on 2010/05/28, entitled "Methods, Systems, and Program Products for Processing a Combined Command Response Based on a Markup Element".

Amendments to the Claims:

This listing of claims will replace all prior versions, and listings, of claims in the application:

1. (Currently Amended) A method for processing an attached command response based on a markup element, the method comprising:

sending, by a server node via a network to a user agent node, a first resource including a first attach markup element defined by a markup language as an indication that at least a portion of a first command response to a first command identified by a first HTTP request-line in a first HTTP message is includable in a second HTTP response message to a HTTP second request message including a second HTTP request-line identifying a second command;

receiving, by the server node via the network from the user agent node, [[a]]the first HTTP request message and receiving, by the server node via the network from the user agent node, [[a]]the second HTTP request message; and

based on the indication ~~first attach markup element~~, sending, by the server node to the user agent node in [[a]]the second HTTP response message~~ to the HTTP second request message including a second HTTP request-line identifying a second command~~, the at least a portion of a first command response~~ to a first command identified by a first HTTP request-line in the first HTTP request message~~.

2. (Previously Cancelled)

3. (Previously Cancelled)

4. (Previously Presented) The method of claim 1 wherein sending the second HTTP response message includes at least one of determining that the second HTTP response message is attachable and determining the first command response is attachable.

5. (Previously Cancelled)

6. (Previously Cancelled)

7. (Previously Cancelled)

8. (Previously Cancelled)

9. (Previously Cancelled).

10. (Previously Cancelled).

11. (Previously Presented) The method of claim 1 further includes sending to the user agent node a first HTTP response message to the first HTTP request message including at most the portion of the first command response.

12. (Previously Presented) A method for processing an attached command response based on a markup element, the method comprising:

receiving, by a user agent node via a network from a server node, a first resource including a first attach markup element defined by a markup language as an indication that at least a portion of a first command response to a first command identified by a first HTTP request-line in a first HTTP request message is includable in a second HTTP response message to a HTTP second request message including a second HTTP request-line identifying a second command;

sending, by the user agent node via the network to the server node, [[a]]the first HTTP request message~~ including a first HTTP request-line identifying a first command~~ and sending [[a]]the second HTTP request message~~ including a second HTTP request-line identifying a second command~~; and

based on the first markup element, receiving, in [[a]]the second HTTP response message~~ to the second HTTP request message~~, the at least a portion of [[a]]the first command response for the first command.

13. (Previously Cancelled)

14. (Previously Cancelled)

15. (Previously Cancelled)

16. (Previously Cancelled)

17. (Previously Presented) The method of claim 12 further includes receiving from the server node a first HTTP response message to the first request HTTP message including at most the portion of the first command response, in response to sending the first HTTP request message identifying the first command.

18. (Currently Amended) A system for processing an attached command response based on a markup element, the system comprising:

an execution environment including a processor that executes an instruction included in at least one of a resource generator component, a request-in component, an attach director component, and a response-out component;

the resource generator component is included in the execution environment for sending, by a server node via a network to a user agent node, a first resource including a first attach markup element defined by a markup language as an indication that at least a portion of a first command response to a first command identified by a first HTTP request-line in a first HTTP message is includable in a second HTTP response message to a HTTP second request message including a second HTTP request-line identifying a second command;

the request-in component is included in the execution environment for receiving, by the server node via the network from the user agent node, [[a]]the first HTTP request message and receiving, by the server node via the network from the user agent node, [[a]]the second HTTP request message; and

the response-out component is included in the execution environment for, based on the indication ~~first attach markup element~~, sending, by the server node to the user agent node in [[a]]the second HTTP response message~~ to the HTTP second request message including a second HTTP request-line identifying a second command~~, the at least a portion of a first command response~~ to a first command identified by a first HTTP request-line in the first HTTP request message~~.

19. (Currently Amended) A system for processing an attached command response based on a markup element, the system comprising:

an execution environment including a processor that executes an instruction included in at least one of a markup content handler component, a request-out component, and an attached response component;

the markup content handler component is included in the execution environment for receiving, by a user agent node via a network from a server node, a first resource including a first attach markup element defined by a markup language as an indication that at least a portion of a first command response to a first command identified by a first HTTP request-line in a first HTTP

request message is includable in a second HTTP response message to a HTTP second request message including a second HTTP request-line identifying a second command;

the request-out component is included in the execution environment for sending, by the user agent node via the network to the server node, [[a]]the first HTTP request message~~ including a first HTTP request-line identifying a first command~~ and sending [[a]]the second HTTP request message~~ including a second HTTP request-line identifying a second command~~; and

the attached response component is included in the execution environment for, based on the first markup element, receiving, in [[a]]the second HTTP response message~~ to the second HTTP request message~~, the at least a portion of [[a]]the first command response for the first command.

20. (Currently Amended) A non-transitory computer readable medium embodying a computer program, executable by a machine, for processing an attached command response based on a markup element, the computer program comprising executable instructions for:

sending, by a server node via a network to a user agent node, a first resource including a first attach markup element defined by a markup language as an indication that at least a portion of a first command response to a first command identified by a first HTTP request-line in a first HTTP message is includable in a second HTTP response message to a HTTP second request message including a second HTTP request-line identifying a second command;

receiving, by the server node via the network from the user agent node, [[a]]the first HTTP request message and receiving, by the server node via the network from the user agent node, [[a]]the second HTTP request message; and

based on the indication~~ first attach markup element~~, sending, by the server node to the user agent node in [[a]]the second HTTP response message~~ to the HTTP second request message including a second HTTP request-line identifying a second command~~, the at least a portion of a first command response~~ to a first command identified by a first HTTP request-line in the first HTTP request message~~.

21. (Currently Amended) A non-transitory computer readable medium embodying a computer program, executable by a machine, for processing an attached command response based on a markup element, the computer program comprising executable instructions for:

receiving, by a user agent node via a network from a server node, a first resource including a first attach markup element defined by a markup language as an indication that at least a portion of a first command response to a first command identified by a first HTTP request-line in a first HTTP request message is includable in a second HTTP response message to a HTTP second request message including a second HTTP request-line identifying a second command;

sending, by the user agent node via the network to the server node, [[a]]the first HTTP request message~~ including a first HTTP request-line identifying a first command~~ and sending [[a]]the second HTTP request message~~ including a second HTTP request-line identifying a second command~~; and

based on the first markup element, receiving, in [[a]]the second HTTP response message~~ to the second HTTP request message~~, the at least a portion of [[a]]the first command response for the first command.

22. (Currently Amended) The method of claim 1 further includes sending, to the user agent node by the server node prior to completing processing of the first command by the server node, a first HTTP response message to the first HTTP request message.

23. (Previously Added) The method of claim 1 wherein the first HTTP request message identifies an attach-request condition, based on the first attach markup element, and sending the second HTTP response message includes detecting that the attach-request condition is met.

24. (Previously Added) The method of claim 4 wherein sending the second HTTP response message includes detecting, in at least one of the first HTTP request-line and the second HTTP request-line, an HTTP method token defined by the HTTP protocol for determining at least one of that the first command response is attachable and that the second HTTP response message is attachable.

25. (Previously Added) The method of claim 4 wherein the first attach markup element is a parent markup element including a descendent markup element, wherein the parent markup element is defined to indicate that at least one of the first command response is attachable and the second HTTP response message is attachable, wherein at least one of the first HTTP

request-line and the second HTTP request-line is identified based on the descendent markup element.

26. (Previously Added) The method of claim 4 wherein the first attach markup element is a descendent markup element included in a parent markup element, wherein the descendent markup element is defined to indicate that at least one of the first command response is attachable and the second HTTP response message is attachable, wherein at least one of the first HTTP request-line and the second HTTP request-line is identified based on the parent markup element.

27. (Previously Added) The method of claim 4 wherein the method includes;

deferring, by the server node, processing of the first command request; and

generating the at least a portion of the first command response in response to the determining.

28. (Previously Added) The method of claim 11 wherein the first HTTP response message includes no portion of the first command response to the first command.

29. (Previously Added) The method of claim 11 wherein at least one of the first HTTP request message and the second HTTP request message includes an HTTP method token defined by the HTTP protocol for determining at least one of that the first command response is an attachable command response and that the second HTTP response message is an attachable response message.

30. (Previously Added) The method of claim 12 wherein the first attach markup element is included in a markup element specifying at least one of a hyperlink, user input control, an event, and at least a portion of a form.

31. (Previously Added) The method of claim 12 wherein the first attach markup element is a parent markup element including a descendent markup element, wherein the parent markup element is defined to indicate that at least one of the first command response is an attachable command response and the second HTTP response message is an attachable response message, wherein at least one of the first command and the second command is identified based on the descendent markup element.

32. (Previously Added) The method of claim 12 wherein the first attach markup element is a descendent markup element included in a parent markup element, wherein the descendent markup element is defined to indicate that at least one of the first command response is an attachable command response and the second HTTP response message is an attachable response message, wherein at least one of the first command and the second command is identified based on the parent markup element.

33. (Previously Added) The method of claim 17 wherein the first HTTP response message includes no portion of the first command response to the first command.

REMARKS:

Status Summary

Claims 1, 4, 11-12, and 17-33 are pending in the present application, of which claims 1, 12, and 18-21 are presented in independent form. Claims 1, 4, 11-12, and 17-33 stand rejected. No new claims are added by this response. No claims are cancelled by this response. Claims 1, 12, and 18-22 are amended by this response.

Amendments to the Specification

Paragraphs 0001-0005 are amended as paragraphs 0001-0006 to reflect a change in status of a related application to an issued patent, to include a referenced to continuation of the now issued patent, and to reflect changes to docket numbers.

Applicant submits that none of the amendments adds new matter to the specification.

Amendments to the Claims

Amendments to claims 1 and 12 are supported by at least previously presented claim 1 and 12 respectively, Figs. 9a-d, and paragraphs 0088 and 0130 of the present application. See also paragraphs 0007, 0055, 0065, 0071, 0092-0113, 0122, 0133, and 0153 of the present application for additional support.

Claims 18 and 20 are analogous to claim 1. Amendments to claims 18 and 20 are supported for at least the same reasons as claim 1.

Claims 19 and 21 are analogous to claim 12. Amendments to claims 19 and 21 are supported for at least the same reasons as claim 12.

The amendment to claim 22 corrects a grammatical error and is supported by at least previously presented claim 22.

Claim Objections

Claim 21 stands objected to by the Office for the following informalities: A limitation in claim 21 concludes with "wherein, at least one the first request message and the second request message" without qualifying or further limiting any aspect of either the first or second request message.

Applicant respectfully submits that current amendments to claim 21 corrects the error objected to by the Office. Applicant requests that the objection be removed.

Double Patenting

Claims 1, 4, 11, 12, and 17-33 stand rejected on the ground of non-statutory obviousness-type double patenting as being unpatentable over claims 1-21 of U.S. Patent No. 8,346,853 in view of Sahai et al. (US 2003/0009545).

Applicant filed a terminal disclaimer via EFS on 07/22/2013 to obviate the double patenting rejection over U.S. Patent No. 8,346,853 and to expedite prosecution of the present application. Applicant respectfully requests that the double patenting rejection be removed.

Claim Rejection(s) - 35 U.S.C. § 103

Claims 1, 4, 11, 12, and 17-33 stand rejected under 35 U.S.C. 103(a) as being unpatentable over Tsai (US 2008/0155016) in view of Sahai et al. (US 2003/0009545), hereinafter "Sahai." These grounds of rejection are respectfully traversed.

Regarding claim 1, as currently amended claim 1 recites the feature of a markup element defined by a markup language as an indication that at least a portion of a first command response to a first command identified by a first HTTP request-line in a first HTTP request message is includable in a second HTTP response message to a HTTP second request message including a second HTTP request-line identifying a second command. Applicant respectfully submits that Tsai and Sahai separately or in combination do not describe, teach, or suggest at least this feature. Further applicant respectfully submits that Tsai and Sahai either separately or in combination necessarily do not describe, teach, or suggest at least the feature of “based on the indication, sending, by the server node to the user agent node in the second HTTP response message, the at least a portion of a first command response”.

The Office acknowledges that Tsai does not teach “a first resource including a first attach markup element; based on the first attach markup element, sending in a second HTTP response to the HTTP second request message, at least a portion of a first command response to a first command identified by a first HTTP request-line in the first HTTP request message”. The Office states that Sahai cures this deficiency citing, in particular, paragraphs 0012, 0037, and 0041.

Applicant understands that the Office equates Sahai's "tag" with a "markup element". The Office further states that Sahai paragraph 0041 teaches "... a single response may correspond to multiple requests" teaches "at least a portion of a first command response to a first command in the first HTTP request message".

Applicant respectfully submits that Sahai's "tag" does not teach (even in combination with Tsai) a markup element defined by a markup language as an indication that at least a portion of a first command response to a first command identified by a first HTTP request-line in a first HTTP message is includable in a second HTTP response message to the HTTP second request message including a second HTTP request-line identifying a second command.

The Office cites Sahai paragraph 12 in equating Sahai's tag with a markup element as recited in claim 1. Sahai paragraph 0012 states that a tag is appended to interactions in a transaction. Typically a "tag" is *appended as header information for a document (e.g., an XML document) that represents the interaction*. While XML is a markup language, nowhere does Sahai indicate that the tag is included in the document or otherwise expressed in or otherwise defined by a markup language. A tag is illustrated in Sahai Fig. 4 which illustrates a data structure in block format. There is no indication that a tag in Sahai is or otherwise includes any markup element (see also Sahai paragraph 0031 and 0051).

Sahai refers to the "tag" as a management information structure that uniquely identifies a transaction and is used to discern contributions of each e-service included in a transaction. (Sahai Abstract, paragraphs 0012-0015, 0031, 0047, 0051-0053). Sahai in paragraph 0013 states that, in addition to including a transaction ID, a tag includes management information which "… is indicative of operational parameters that are specific to the responding e-service provider. The operational parameters may include an e-service health index (e.g., up, down, congested, etc.), an indication of e-service availability, an indication of reliabil-ity (e.g., the number of faults per number of handled service requests), an indication of performance (e.g., response time or response status), and/or an indication of a fault which occurred when the request was serviced. Sahai paragraph 0014 states that a tag may include management information that identifies a provider tree of transaction interaction and contributions. When the tags are utilized to correlate interactions, a local management information library can provide the information that is necessary for end-to-end conversation management. Applicant sees no evidence in Sahai that Sahai's tag is a markup element.

Applicant respectfully submits that the Office's own interpretation of "tag" as taught by Sahai is contradictory. The Office interprets Sahai's tag as a markup element in rejecting claim 1, then interprets Sahai's tag as an HTTP method token in rejecting claim 24. Applicant respectfully submits, that applicant is unable to find any evidence that Sahai's tag is either, and it cannot be both since HTTP is not a markup language.

Applicant further respectfully submits that Sahai's teaching, that "… a single response may correspond to multiple requests", does not describe, teach, or suggest "at least a portion of a first command response to a first command in the first HTTP request message". Applicant sees no evidence that the Office's interpretation of this recital by Sahai is a proper interpretation of claim 1. Applicant submits that the cited teaching of Sahai is vague and subject to multiple interpretations. For example, in numerous locations, Sahai describes e-service architecture in terms of a tree with requests cascading down the tree and responses sent up the tree (see Sahai paragraph 0031 and 0047). As such, a single request to a parent node can result in multiple responses at a lower layer. Still, each response at a lower layer has a corresponding request at the lower layer. In another interpretation, many web services send emails to users for various reasons. That is, the user submits data, receives a web page as an immediate response, and then receives another response later via email. Applicant is confident that the Examiner has experienced this interaction. It is more likely that Sahai is referring to this type of well-known pattern. Indeed, Sahai describes receiving an immediate response and then a later response (multiple responses) in paragraph 0009 in describing the prior art. Given the well-known pattern of interaction, without further evidence applicant sees no reason to interpret Sahai in light of claim 1, rather in light of what was known to exist at the time of Sahai.

Should the Office disagree, applicant respectfully requests the Examiner to assist the applicant by explaining and/or particularly pointing out where in Sahai (and/or in Tsai) support is provided for interpreting "…a single response may correspond to multiple request" as teaching the third element of currently amended claim 1.

Applicant further, respectfully, disagrees with the Office that the "requests", "responses", and e-service protocols in Sahai relate to HTTP. Applicant will show that Sahai's use of HTTP is restricted to an initial request from a web client to an e-service. Applicant will further show that other "requests" and "responses" in Sahai are not HTTP requests. Applicant will show that Sahai's "requests" and "responses" are for a protocol at a higher layer of a network stack than HTTP.

Sahai mentions HTTP in paragraphs 0007-0009 and 0036-0037 in describing the operation of prior art e-services. Applicant submits that there is nothing in Sahai that indicates that HTTP is used in any way other than as specified in RFC 2616, where each HTTP request has a corresponding HTTP response. That is, in Sahai there is a one-to-one relationship between HTTP requests and HTTP responses.

Applicant respectfully submits that Sahai's "requests" and "responses" not otherwise identified as HTTP requests and HTTP responses are not HTTP requests/responses. Sahai is clear that "requests" and "responses" are "documents" (preferably XML documents) (Sahai paragraphs 0012, 0015, 0029-0031, 0045, 0047-0048, 0050-0051, and 0057). While an HTTP request or response may include a document in its body, HTTP requests and responses are not documents. HTTP is not expressed or otherwise represented in XML.

Regarding the obviousness of integrating features of Sahai's e-service document-based protocol into Tsai's use of HTTP, and into HTTP in more generally, Sahai's teachings require two protocols, 1) an e-services protocol which is the subject matter of Sahai (see for example Sahai paragraphs 0005 and 0069), and 2) a lower-layer, protocol to communicate the e-services documents (request/responses) between nodes in a network (see Sahai paragraph 0069)).

The applicant respectfully submits that the Office has provided no evidence that it would have been obvious to convert Sahai's *dual protocol solution* (HTTP as carrier for an e-services protocol) into a *single protocol solution* as taught in the present application. The applicant respectfully disagrees, that combining Sahai's e-service protocol with HTTP in general or with HTTP as utilized by Tsai and/or integrating features of Sahai's e-services protocol into HTTP, would have produced a useful result, much less that it would have been obvious.

For Sahai, HTTP is described only as a carrier of Sahai's e-services protocol. Sahai does not suggest HTTP as the e-services protocol. This stands against the Office's assertion that it would have been obvious to combine, since clearly Sahai was familiar with HTTP (as used in both Tsai and Sahai – RFC 2616).

In light of the above, applicant respectfully submits that neither Sahai nor Tsai separately or in combination discloses, teaches, or suggests all the features of currently amended claim 1. Claim 1 is believed to be patentable for at least the reasons described above. Claims 4, 11, and

22-26 depend from claim 1. As such, claims 4, 11, and 22-26 are believed to be allowable for at least the same reasons as claim 1.

Applicant respectfully submits that currently amended claim 12 is similar to claim 1 written from the perspective a user agent rather than a server, and is allowable for at least the same reasons provided for currently amended claim 1. Claims 17 and 28-33 depend from claim 1. As such, claims 17 and 28-33 are believed to be allowable for at least the same reasons as claim 1.

Regarding currently amended claim 18, applicant respectfully submits that claim 18 is analogous to claim 1 and is believed to be patentable for at least the same reasons as claim 1.

Regarding currently amended claim 19, applicant respectfully submits that claim 19 is analogous to claim 12 and is believed to be patentable for at least the same reasons as claim 12.

Regarding currently amended claim 20, applicant respectfully submits that claim 20 is analogous to claim 1 and is believed to be patentable for at least the same reasons as claim 1.

Regarding currently amended claim 21, applicant respectfully submits that claim 21 is analogous to claim 1 and is believed to be patentable for at least the same reasons as claim 1.

Applicant respectfully submits that claim 24 is allowable. As discussed with respect to claim 1, the Office interprets Sahai's tag as a markup element in rejecting claim 1, then interprets Sahai's tag as an HTTP method token in rejection claim 24. Applicant respectfully submits, that is no evidence that Sahai's tag is either, and it cannot be both.

In light of the foregoing, applicant respectfully submits that rejections for 1, 4, 11, 12, and 17-33 under 35 U.S.C. 103(a) be withdrawn.

CONCLUSION

In view of the above, it is respectfully submitted that the present application is now in proper condition for allowance, and an early notice to such effect is earnestly solicited

The examiner is respectfully requested to telephone the undersigned inventor at the below-listed number if, after reviewing the above Remarks, the examiner believes outstanding matters remain that may be resolved without the issuance of a subsequent Official Action.

DEPOSIT ACCOUNT The Commissioner is hereby authorized to charge any additional fees, or credit any overpayment, associated with the filing of this paper to Deposit Account No. 50-5171

Respectfully submitted,

/Robert Paul Morris/

Robert Paul Morris

Applicant/Inventor

Date: July 22, 2013

Customer No: 92924
712 Latta Street
Raleigh, North Carolina 27607
919.828.1792
paul.morris@nc.rr.com

Electronic Acknowledgement Receipt

EFS ID:	16371926
Application Number:	12789538
International Application Number:	
Confirmation Number:	8814
Title of Invention:	METHODS, SYSTEMS, AND COMPUTER PROGRAM PRODUCTS FOR PROCESSING AN ATTACHED COMMAND RESPONSE BASED ON A MARKUP ELEMENT
First Named Inventor/Applicant Name:	Robert Paul Morris
Customer Number:	92924
Filer:	Robert Paul Morris
Filer Authorized By:	
Attorney Docket Number:	0147-SP
Receipt Date:	22-JUL-2013
Filing Date:	28-MAY-2010
Time Stamp:	07:52:10
Application Type:	Utility under 35 USC 111(a)

Payment information:

Submitted with Payment	no

File Listing:

Document Number	Document Description	File Name	File Size(Bytes)/ Message Digest	Multi Part /.zip	Pages (if appl.)
1	After Final Consideration Program Request	0147-OA-F-1-AfterFinalPilotRequest.pdf	226155 faa44521292f2186afa6ca3a120a860418096d66	no	2

Warnings:

Information:

2		0147-OA-F-1-AfterFinalPilot-Resp-Filed.pdf	180246 2d6ecdd11cf4f2ef8c16893f799e2b6c83f809de	yes	16

	Multipart Description/PDF files in .zip description		
	Document Description	**Start**	**End**
	Response After Final Action	1	1
	Specification	2	2
	Claims	3	9
	Applicant Arguments/Remarks Made in an Amendment	10	16

Warnings:	
Information:	
Total Files Size (in bytes):	406401

This Acknowledgement Receipt evidences receipt on the noted date by the USPTO of the indicated documents, characterized by the applicant, and including page counts, where applicable. It serves as evidence of receipt similar to a Post Card, as described in MPEP 503.

<u>New Applications Under 35 U.S.C. 111</u>
If a new application is being filed and the application includes the necessary components for a filing date (see 37 CFR 1.53(b)-(d) and MPEP 506), a Filing Receipt (37 CFR 1.54) will be issued in due course and the date shown on this Acknowledgement Receipt will establish the filing date of the application.

<u>National Stage of an International Application under 35 U.S.C. 371</u>
If a timely submission to enter the national stage of an international application is compliant with the conditions of 35 U.S.C. 371 and other applicable requirements a Form PCT/DO/EO/903 indicating acceptance of the application as a national stage submission under 35 U.S.C. 371 will be issued in addition to the Filing Receipt, in due course.

<u>New International Application Filed with the USPTO as a Receiving Office</u>
If a new international application is being filed and the international application includes the necessary components for an international filing date (see PCT Article 11 and MPEP 1810), a Notification of the International Application Number and of the International Filing Date (Form PCT/RO/105) will be issued in due course, subject to prescriptions concerning national security, and the date shown on this Acknowledgement Receipt will establish the international filing date of the application.

Doc Code: A.NE.AFCP
Document Description: After Final Consideration Pilot Program Request

PTO/SB/434 (05-13)

CERTIFICATION AND REQUEST FOR CONSIDERATION UNDER THE AFTER FINAL CONSIDERATION PILOT PROGRAM 2.0

Practitioner Docket No.:	Application No.:	Filing Date:
0147-SP	12789538	2010-05-28
First Named Inventor:	Title:	
Robert Paul Morris	Methods, Systems, and Computer Program Products for Processing an Attached Command Response Based on a Markup Element	

APPLICANT HEREBY CERTIFIES THE FOLLOWING AND REQUESTS CONSIDERATION UNDER THE AFTER FINAL CONSIDERATION PILOT PROGRAM 2.0 (AFCP 2.0) OF THE ACCOMPANYING RESPONSE UNDER 37 CFR 1.116.

1. The above-identified application is (i) an original utility, plant, or design nonprovisional application filed under 35 U.S.C. 111(a) [a continuing application (*e.g.*, a continuation or divisional application) is filed under 35 U.S.C. 111(a) and is eligible under (i)], or (ii) an international application that has entered the national stage in compliance with 35 U.S.C. 371(c).
2. The above-identified application contains an outstanding final rejection.
3. Submitted herewith is a response under 37 CFR 1.116 to the outstanding final rejection. The response includes an amendment to at least one independent claim, and the amendment does not broaden the scope of the independent claim in any aspect.
4. This certification and request for consideration under AFCP 2.0 is the only AFCP 2.0 certification and request filed in response to the outstanding final rejection.
5. Applicant is willing and available to participate in any interview requested by the examiner concerning the present response.
6. This certification and request is being filed electronically using the Office's electronic filing system (EFS-Web).
7. Any fees that would be necessary consistent with current practice concerning responses after final rejection under 37 CFR 1.116, *e.g.*, extension of time fees, are being concurrently filed herewith. [There is no additional fee required to request consideration under AFCP 2.0.]
8. By filing this certification and request, applicant acknowledges the following:
   - Reissue applications and reexamination proceedings are not eligible to participate in AFCP 2.0.
   - The examiner will verify that the AFCP 2.0 submission is compliant, *i.e.*, that the requirements of the program have been met (see items 1 to 7 above). For compliant submissions:
     - The examiner will review the response under 37 CFR 1.116 to determine if additional search and/or consideration (i) is necessitated by the amendment and (ii) could be completed within the time allotted under AFCP 2.0. If additional search and/or consideration is required but cannot be completed within the allotted time, the examiner will process the submission consistent with current practice concerning responses after final rejection under 37 CFR 1.116, *e.g.*, by mailing an advisory action.
     - If the examiner determines that the amendment does not necessitate additional search and/or consideration, or if the examiner determines that additional search and/or consideration is required and could be completed within the allotted time, then the examiner will consider whether the amendment places the application in condition for allowance (after completing the additional search and/or consideration, if required). If the examiner determines that the amendment does not place the application in condition for allowance, then the examiner will contact the applicant and request an interview.
       - The interview will be conducted by the examiner, and if the examiner does not have negotiation authority, a primary examiner and/or supervisory patent examiner will also participate.
       - If the applicant declines the interview, or if the interview cannot be scheduled within ten (10) calendar days from the date that the examiner first contacts the applicant, then the examiner will proceed consistent with current practice concerning responses after final rejection under 37 CFR 1.116.

Signature	Date
/Robert Paul Morris/	2013-07-22
Name (Print/Typed) Robert Paul Morris	Practitioner Registration No.

Note: *This form must be signed in accordance with 37 CFR 1.33. See 37 CFR 1.4(d) for signature requirements and certifications. Submit multiple forms if more than one signature is required, see below*.*

☐ * Total of _____ forms are submitted.

Privacy Act Statement

The **Privacy Act of 1974 (P.L. 93-579)** requires that you be given certain information in connection with your submission of the attached form related to a patent application or patent. Accordingly, pursuant to the requirements of the Act, please be advised that: (1) the general authority for the collection of this information is 35 U.S.C. 2(b)(2); (2) furnishing of the information solicited is voluntary; and (3) the principal purpose for which the information is used by the U.S. Patent and Trademark Office is to process and/or examine your submission related to a patent application or patent. If you do not furnish the requested information, the U.S. Patent and Trademark Office may not be able to process and/or examine your submission, which may result in termination of proceedings or abandonment of the application or expiration of the patent.

The information provided by you in this form will be subject to the following routine uses:

1. The information on this form will be treated confidentially to the extent allowed under the Freedom of Information Act (5 U.S.C. 552) and the Privacy Act (5 U.S.C 552a). Records from this system of records may be disclosed to the Department of Justice to determine whether disclosure of these records is required by the Freedom of Information Act.
2. A record from this system of records may be disclosed, as a routine use, in the course of presenting evidence to a court, magistrate, or administrative tribunal, including disclosures to opposing counsel in the course of settlement negotiations.
3. A record in this system of records may be disclosed, as a routine use, to a Member of Congress submitting a request involving an individual, to whom the record pertains, when the individual has requested assistance from the Member with respect to the subject matter of the record.
4. A record in this system of records may be disclosed, as a routine use, to a contractor of the Agency having need for the information in order to perform a contract. Recipients of information shall be required to comply with the requirements of the Privacy Act of 1974, as amended, pursuant to 5 U.S.C. 552a(m).
5. A record related to an International Application filed under the Patent Cooperation Treaty in this system of records may be disclosed, as a routine use, to the International Bureau of the World Intellectual Property Organization, pursuant to the Patent Cooperation Treaty.
6. A record in this system of records may be disclosed, as a routine use, to another federal agency for purposes of National Security review (35 U.S.C. 181) and for review pursuant to the Atomic Energy Act (42 U.S.C. 218(c)).
7. A record from this system of records may be disclosed, as a routine use, to the Administrator, General Services, or his/her designee, during an inspection of records conducted by GSA as part of that agency's responsibility to recommend improvements in records management practices and programs, under authority of 44 U.S.C. 2904 and 2906. Such disclosure shall be made in accordance with the GSA regulations governing inspection of records for this purpose, and any other relevant (*i.e.*, GSA or Commerce) directive. Such disclosure shall not be used to make determinations about individuals.
8. A record from this system of records may be disclosed, as a routine use, to the public after either publication of the application pursuant to 35 U.S.C. 122(b) or issuance of a patent pursuant to 35 U.S.C. 151. Further, a record may be disclosed, subject to the limitations of 37 CFR 1.14, as a routine use, to the public if the record was filed in an application which became abandoned or in which the proceedings were terminated and which application is referenced by either a published application, an application open to public inspection or an issued patent.
9. A record from this system of records may be disclosed, as a routine use, to a Federal, State, or local law enforcement agency, if the USPTO becomes aware of a violation or potential violation of law or regulation.

PTO/SB/06 (09-11)
Approved for use through 1/31/2014. OMB 0651-0032
U.S. Patent and Trademark Office; U.S. DEPARTMENT OF COMMERCE
Under the Paperwork Reduction Act of 1995, no persons are required to respond to a collection of information unless it displays a valid OMB control number.

PATENT APPLICATION FEE DETERMINATION RECORD Substitute for Form PTO-875	Application or Docket Number 12/789,538	Filing Date 05/28/2010	☐ To be Mailed

ENTITY: ☐ LARGE ☒ SMALL ☐ MICRO

APPLICATION AS FILED – PART I

FOR	(Column 1) NUMBER FILED	(Column 2) NUMBER EXTRA	RATE ($)	FEE ($)
☐ BASIC FEE (37 CFR 1.16(a), (b), or (c))	N/A	N/A	N/A	
☐ SEARCH FEE (37 CFR 1.16(k), (i), or (m))	N/A	N/A	N/A	
☐ EXAMINATION FEE (37 CFR 1.16(o), (p), or (q))	N/A	N/A	N/A	
TOTAL CLAIMS (37 CFR 1.16(i))	minus 20 =	*	X $ =	
INDEPENDENT CLAIMS (37 CFR 1.16(h))	minus 3 =	*	X $ =	
☐ APPLICATION SIZE FEE (37 CFR 1.16(s))	If the specification and drawings exceed 100 sheets of paper, the application size fee due is $310 ($155 for small entity) for each additional 50 sheets or fraction thereof. See 35 U.S.C. 41(a)(1)(G) and 37 CFR 1.16(s).			
☐ MULTIPLE DEPENDENT CLAIM PRESENT (37 CFR 1.16(j))				
* If the difference in column 1 is less than zero, enter "0" in column 2.			TOTAL	

APPLICATION AS AMENDED – PART II

AMENDMENT

07/22/2013	(Column 1) CLAIMS REMAINING AFTER AMENDMENT		(Column 2) HIGHEST NUMBER PREVIOUSLY PAID FOR	(Column 3) PRESENT EXTRA	RATE ($)	ADDITIONAL FEE ($)
Total (37 CFR 1.16(i))	* 21	Minus	** 21	= 0	X $40 =	0
Independent (37 CFR 1.16(h))	* 6	Minus	***6	= 0	X $210 =	0
☐ Application Size Fee (37 CFR 1.16(s))						
☐ FIRST PRESENTATION OF MULTIPLE DEPENDENT CLAIM (37 CFR 1.16(j))						
					TOTAL ADD'L FEE	**0**

AMENDMENT

	(Column 1) CLAIMS REMAINING AFTER AMENDMENT		(Column 2) HIGHEST NUMBER PREVIOUSLY PAID FOR	(Column 3) PRESENT EXTRA	RATE ($)	ADDITIONAL FEE ($)
Total (37 CFR 1.16(i))	*	Minus	**	=	X $ =	
Independent (37 CFR 1.16(h))	*	Minus	***	=	X $ =	
☐ Application Size Fee (37 CFR 1.16(s))						
☐ FIRST PRESENTATION OF MULTIPLE DEPENDENT CLAIM (37 CFR 1.16(j))						
					TOTAL ADD'L FEE	

* If the entry in column 1 is less than the entry in column 2, write "0" in column 3.
** If the "Highest Number Previously Paid For" IN THIS SPACE is less than 20, enter "20".
*** If the "Highest Number Previously Paid For" IN THIS SPACE is less than 3, enter "3".
The "Highest Number Previously Paid For" (Total or Independent) is the highest number found in the appropriate box in column 1.

LIE
/STEFANIE BRYCE/

This collection of information is required by 37 CFR 1.16. The information is required to obtain or retain a benefit by the public which is to file (and by the USPTO to process) an application. Confidentiality is governed by 35 U.S.C. 122 and 37 CFR 1.14. This collection is estimated to take 12 minutes to complete, including gathering, preparing, and submitting the completed application form to the USPTO. Time will vary depending upon the individual case. Any comments on the amount of time you require to complete this form and/or suggestions for reducing this burden, should be sent to the Chief Information Officer, U.S. Patent and Trademark Office, U.S. Department of Commerce, P.O. Box 1450, Alexandria, VA 22313-1450. DO NOT SEND FEES OR COMPLETED FORMS TO THIS ADDRESS. **SEND TO: Commissioner for Patents, P.O. Box 1450, Alexandria, VA 22313-1450.**
If you need assistance in completing the form, call 1-800-PTO-9199 and select option 2.

UNITED STATES PATENT AND TRADEMARK OFFICE

UNITED STATES DEPARTMENT OF COMMERCE
United States Patent and Trademark Office
Address: COMMISSIONER FOR PATENTS
P.O. Box 1450
Alexandria, Virginia 22313-1450
www.uspto.gov

APPLICATION NO.	FILING DATE	FIRST NAMED INVENTOR	ATTORNEY DOCKET NO.	CONFIRMATION NO.
12/789,538	05/28/2010	Robert Paul Morris	0147-SP	8814

92924 7590 06/27/2013
Small Pond Associates, LLC
Robert Paul Morris
712 Latta Street
Raleigh, NC 27607

EXAMINER
CONAWAY, JAMES E

ART UNIT	PAPER NUMBER
2454	

NOTIFICATION DATE	DELIVERY MODE
06/27/2013	ELECTRONIC

Please find below and/or attached an Office communication concerning this application or proceeding.

The time period for reply, if any, is set in the attached communication.

Notice of the Office communication was sent electronically on above-indicated "Notification Date" to the following e-mail address(es):

paul.morris@nc.rr.com
rpmorris@yahoo.com

PTOL-90A (Rev. 04/07)

Office Action Summary	Application No. 12/789,538	Applicant(s) MORRIS, ROBERT PAUL	
	Examiner JAMES CONAWAY	Art Unit 2454	AIA (First Inventor to File) Status No

-- The MAILING DATE of this communication appears on the cover sheet with the correspondence address --

Period for Reply

A SHORTENED STATUTORY PERIOD FOR REPLY IS SET TO EXPIRE 3 MONTH(S) OR THIRTY (30) DAYS, WHICHEVER IS LONGER, FROM THE MAILING DATE OF THIS COMMUNICATION.

- Extensions of time may be available under the provisions of 37 CFR 1.136(a). In no event, however, may a reply be timely filed after SIX (6) MONTHS from the mailing date of this communication.
- If NO period for reply is specified above, the maximum statutory period will apply and will expire SIX (6) MONTHS from the mailing date of this communication.
- Failure to reply within the set or extended period for reply will, by statute, cause the application to become ABANDONED (35 U.S.C. § 133). Any reply received by the Office later than three months after the mailing date of this communication, even if timely filed, may reduce any earned patent term adjustment. See 37 CFR 1.704(b).

Status

1)☒ Responsive to communication(s) filed on *25 May 2013*.

☐ A declaration(s)/affidavit(s) under **37 CFR 1.130(b)** was/were filed on _____.

2a)☒ This action is **FINAL**. 2b)☐ This action is non-final.

3)☐ An election was made by the applicant in response to a restriction requirement set forth during the interview on _____; the restriction requirement and election have been incorporated into this action.

4)☐ Since this application is in condition for allowance except for formal matters, prosecution as to the merits is closed in accordance with the practice under *Ex parte Quayle*, 1935 C.D. 11, 453 O.G. 213.

Disposition of Claims

5)☒ Claim(s) *1,4,11,12 and 17-33* is/are pending in the application.

5a) Of the above claim(s) _____ is/are withdrawn from consideration.

6)☐ Claim(s) _____ is/are allowed.

7)☒ Claim(s) *1,4,11,12 and 17-33* is/are rejected.

8)☐ Claim(s) _____ is/are objected to.

9)☐ Claim(s) _____ are subject to restriction and/or election requirement.

* If any claims have been determined allowable, you may be eligible to benefit from the **Patent Prosecution Highway** program at a participating intellectual property office for the corresponding application. For more information, please see http://www.uspto.gov/patents/init_events/pph/index.jsp or send an inquiry to PPHfeedback@uspto.gov.

Application Papers

10)☐ The specification is objected to by the Examiner.

11)☐ The drawing(s) filed on _____ is/are: a)☐ accepted or b)☐ objected to by the Examiner.

Applicant may not request that any objection to the drawing(s) be held in abeyance. See 37 CFR 1.85(a).

Replacement drawing sheet(s) including the correction is required if the drawing(s) is objected to. See 37 CFR 1.121(d).

Priority under 35 U.S.C. § 119

12)☐ Acknowledgment is made of a claim for foreign priority under 35 U.S.C. § 119(a)-(d) or (f).

Certified copies:

a)☐ All b)☐ Some * c)☐ None of the:

1.☐ Certified copies of the priority documents have been received.

2.☐ Certified copies of the priority documents have been received in Application No. _____.

3.☐ Copies of the certified copies of the priority documents have been received in this National Stage application from the International Bureau (PCT Rule 17.2(a)).

* See the attached detailed Office action for a list of the certified copies not received.

Interim copies:

a)☐ All b)☐ Some c)☐ None of the: Interim copies of the priority documents have been received.

Attachment(s)

1) ☒ Notice of References Cited (PTO-892)

2) ☒ Information Disclosure Statement(s) (PTO/SB/08) Paper No(s)/Mail Date *5/25/2013*.

3) ☐ Interview Summary (PTO-413) Paper No(s)/Mail Date. _____ .

4) ☐ Other: _____.

DETAILED ACTION

Claim Objections

1. Claim 21 is objected to because of the following informalities: A limitation in claim 21 concludes with "*wherein, at least one the first request message and the second request message*" without qualifying or further limiting any aspect of either the first or second request message. This portion of the claim is grammatically incorrect, and does not further limit the claim. Appropriate correction is required.

Double Patenting

1. The nonstatutory double patenting rejection is based on a judicially created doctrine grounded in public policy (a policy reflected in the statute) so as to prevent the unjustified or improper timewise extension of the "right to exclude" granted by a patent and to prevent possible harassment by multiple assignees. A nonstatutory obviousness-type double patenting rejection is appropriate where the conflicting claims are not identical, but at least one examined application claim is not patentably distinct from the reference claim(s) because the examined application claim is either anticipated by, or would have been obvious over, the reference claim(s). See, e.g., *In re Berg*, 140 F.3d 1428, 46 USPQ2d 1226 (Fed. Cir. 1998); *In re Goodman*, 11 F.3d 1046, 29 USPQ2d 2010 (Fed. Cir. 1993); *In re Longi*, 759 F.2d 887, 225 USPQ 645 (Fed. Cir. 1985); *In re Van Ornum*, 686 F.2d 937, 214 USPQ 761 (CCPA 1982); *In re Vogel*, 422 F.2d 438, 164 USPQ 619 (CCPA 1970); and *In re Thorington*, 418 F.2d 528, 163 USPQ 644 (CCPA 1969).

A timely filed terminal disclaimer in compliance with 37 CFR 1.321(c) or 1.321(d) may be used to overcome an actual or provisional rejection based on a nonstatutory double patenting ground provided the conflicting application or patent either is shown to be commonly owned with this application, or claims an invention made as a result of activities undertaken within the scope of a joint research agreement.

Effective January 1, 1994, a registered attorney or agent of record may sign a terminal disclaimer. A terminal disclaimer signed by the assignee must fully comply with 37 CFR 3.73(b).

2. Claims 1, 4, 11, 12 and 17-33 are rejected on the ground of nonstatutory obviousness-type double patenting as being unpatentable over claims 1-21 of U.S. Patent No. 8,346,853 in view of Sahai et al. (US 2003/0009545).

3. Taking claim 1 of the present application (the '538 application) and the '853 patent as exemplary, the claims may be compared as follows:

12/789,538 Application	**US 8,346,853**
1. (Currently Amended) A method for processing an attached command response based on a markup element, the method comprising: <u>sending, by a server node via a network to a user agent node, a first resource including a first attach markup element;</u> receiving, by the server node via the network from the user agent node, a first HTTP request message and receiving, by the server node via the network from the user agent node, a second HTTP request message and	1. A method for processing an attached command response, the method comprising: sending, by a user agent node in a first HTTP request to a server node, a first HTTP request-line identifying a first command; sending, by the user agent node, in a second HTTP request, a second HTTP request-line identifying a second command different from the first command, wherein the second HTTP request is sent

	separately from the first HTTP request;
<u>based on the first attach markup element,</u>	
sending, by the server node to the user agent node in a second HTTP response message, to the HTTP second request message including a second HTTP request-line identifying a second command, at least a portion of a first command response to a first command identified by a first HTTP request-line in the first HTTP request message.	receiving, by the user agent node, a second HTTP response to the second HTTP request, the second HTTP response including at least a portion of a second command response to the second command, wherein the user agent node does not receive a complete response to the first HTTP request prior to receiving the second HTTP response; and determining, by the user agent node, that the second HTTP response includes an attached command response including at least a portion of a first command response to the first command, wherein the attached command response is attached based on attach-request information received from the user agent node.

4. As noted in the above table, claim 1 of the '853 patent meets all the limitations of claim 1 of the present application except for the underlined limitations. Specifically, the '853 patent does not recite that the server transmits a first resource including a first attach markup element, nor does it recite the sending response step is based on that attach markup element.

Sahai teaches:

sending, by a server node via a network to a user agent node, a first resource including a first attach markup element (Sahai: par 0012 [*…a tag is appended to interactions such as requests and responses. The appended tag is typically header information for a document (e.g. an XML document) that represents the interaction.*])

based on the first attach markup element (Sahai: par 0051-0052), sending in a

second HTTP response to the HTTP second request message, at least a portion of a first command response to a first command in the first HTTP request message (Sahai: par 0037; 0041 [*…a single response may correspond to multiple requests.*]).

It would have been obvious to one of ordinary skill in the art at the time the invention was made to incorporate the teachings of Sahai in the system of claim 1 of the '853 patent with predictable results. One would be motivated to make the combination in order to allow the '853 system to maintain correlation amongst the multiple requests and responses using a tag transmitted by the server. It would have been readily apparent that some means of correlation would be required and accordingly employing the technique of Sahai would amount to simple substitution of one known technique for another with predictable results.

Independent claims 12 and 18-21 of the present application recite comparable subject matter to claim 1 and are rejected on the same basis. The subject matter of dependent claim 4, 17, 25-26 and 29 are met by claim 5 of the '853 patent and accordingly are rejected. Claims 11, 22-24, 27-28, and 30-33 are met by portions of claim 1 of the '853 patent and accordingly are rejected on the same basis.

Claim Rejections - 35 USC § 103

1. The following is a quotation of 35 U.S.C. 103(a) which forms the basis for all obviousness rejections set forth in this Office action:

> (a) A patent may not be obtained though the invention is not identically disclosed or described as set forth in section 102 of this title, if the differences between the subject matter sought to be patented and the prior art are such that the subject matter as a whole would have been obvious at the time the invention was made to a person having ordinary skill in the art to which said subject matter pertains. Patentability shall not be negatived by the manner in which the invention was made.

2. Claims 1, 4, 11, 12 and 17-33 are rejected under 35 U.S.C. 103(a) as being unpatentable over Tsai (US 2008/0155016) in view of Sahai et al. (US 2003/0009545), hereafter "Sahai."

3. Regarding claim 1, Tsai teaches a method for processing an attached command response based on a markup element, the method comprising:

sending, by a server node via a network to a user agent node, a first resource (Tsai: 18 of FIG. 1; par 0041);

receiving, by the server node via the network from the user agent node, a first HTTP request message (Tsai: FIG. 1 [*GET /logo.jpg HTTP/1.1*]) and

receiving, by the server node via the network from the user agent node, a second HTTP request message (Tsai: FIG. 1 [*GET /rollover.gif HTTP/1.1*]) and

sending, by the server node to the user agent node a second HTTP response message to the HTTP second request message including a second HTTP request-line identifying a second command (Tsai: Fig. 1 [*HTTP/1.1 200 OK Content-Type: image/gif*]).

Tsai does not teach:

a first resource including a first attach markup element;

based on the first attach markup element, sending in a second HTTP response to the HTTP second request message, at least a portion of a first command response to a

first command identified by a first HTTP request-line in the first HTTP request message.

Sahai teaches a technique of:

a first resource including a first attach markup element (Sahai: par 0012 [*…a tag is appended to interactions such as requests and responses. The appended tag is typically header information for a document (e.g. an XML document) that represents the interaction.*]);

based on the first attach markup element (Sahai: par 0051-0052), sending in a second HTTP response to the HTTP second request message, at least a portion of a first command response to a first command in the first HTTP request message (Sahai: par 0037; 0041 [*…a single response may correspond to multiple requests.*]).

It would have been obvious to one of ordinary skill in the art at the time the invention was made to employ the communication technique of Sahai in the Tsai system with predictable results. One would be motivated to employ the technique in order to reduce the amount of message exchanging required in the Tsai system. It would have been readily apparent that such a modification would have been beneficial because it is consistent with the stated goals of Tsai: minimizing web access latency and maximizing throughput, by eliminating unnecessary response messages. See Tsai: par 0006. One would further be motivated to make the combination because it is a well known technique in networking to utilize a single response for multiple requests. Accordingly, employing the technique of Sahai in the Tsai system would amount to

simple substitution of one known technique for another with predictable results. One would further be motivated to make the combination because both systems communicate information utilizing HTTP requests and responses. Due to this substantial similarity it would have been readily apparent to one of ordinary skill that the various beneficial features of the references may be combined and/or interchanged with predictable results and a synergistic effect.

4. Regarding claim 4, the method of claim 1 wherein sending the second HTTP response message includes at least one of determining that the second HTTP response message is attachable and determining the first command response is attachable (Sahai: par 0012 [*…a tag is appended to interactions such as requests and responses. The appended tag is typically header information for a document (e.g. an XML document) that represents the interaction.*]).

5. Regarding claim 11, the method of claim 1 further includes sending to the user agent node a first HTTP response message to the first HTTP request message including at most the portion of the first command response (Sahai: par 0037).

6. Regarding claim 12, a method for processing an attached command response based on a markup element, the method comprising:

receiving, by a user agent node via a network from a server node, a first resource including a first attach markup element (Tsai: 18 of FIG. 1; par 0041; Sahai: par 0012

[*…a tag is appended to interactions such as requests and responses. The appended tag is typically header information for a document (e.g. an XML document) that represents the interaction.*]);

sending, by the user agent node via the network to the server node, a first request message including a first HTTP request-line identifying a first command (Tsai: FIG. 1 [*GET /logo.jpg HTTP/1.1*]) and sending a second HTTP request message including a second HTTP request-line identifying a second command (Tsai: FIG. 1 [*GET /rollover.gif HTTP/1.1*]) and

based on the first markup element (Sahai: par 0051-0052), receiving, in a second HTTP response message to the second HTTP request message, at least a portion of a first command response for the first command (Sahai: par 0037; 0041 [*…a single response may correspond to multiple requests.*]).

7. Regarding claim 17, the method of claim 12 further includes receiving from the server node a first HTTP response message to the first request HTTP message including at most the portion of the first command response, in response to sending the first HTTP request message identifying the first command (Sahai: par 0037).

8. Regarding claim 18, a system for processing an attached command response based on a markup element, the system comprising:

an execution environment including a processor (Tsai: par 0066) that executes an instruction included in at least one of a resource generator component (Tsai: 36 of

FIG. 3), a request-in component (Tsai: 14 of FIG. 2), an attach director component (Sahai: par 0051-0052), and a response-out component (Tsai: 14 of FIG. 2);

the resource generator component is included in the execution environment configured for sending, by a server node via a network to a user agent node, a first resource including a first attach markup element (Tsai: 18 of FIG. 1; par 0041; Sahai: par 0012 [*…a tag is appended to interactions such as requests and responses. The appended tag is typically header information for a document (e.g. an XML document) that represents the interaction.*]);

the request-in component is included in the execution environment configured for receiving, by the server node via the network from the user agent node, a first HTTP request message (Tsai: FIG. 1 [*GET /logo.jpg HTTP/1.1*]) and receiving, by the server node via the network from the user agent node, a second HTTP request message (Tsai: FIG. 1 [*GET /rollover.gif HTTP/1.1*]) and

the response-out component is included in the execution environment configured for, based on the first attach markup element (Sahai: par 0051-0052), sending, by the server node to the user agent node in a second HTTP response message, to the HTTP second request message including a second HTTP request-line identifying a second command (Tsai: Fig. 1 [*HTTP/1.1 200 OK Content-Type: image/gif*]), at least a portion of a first command response to a first command identified by a first HTTP request-line in the first HTTP request message (Sahai: par 0037; 0041 [*…a single response may correspond to multiple requests.*]).

9. Regarding claim 19, a system for processing an attached command response based on a markup element, the system comprising:

an execution environment including a processor (Tsai: par 0066) that executes an instruction included in at least one of a markup content handler component (Tsai: 10 of FIG. 1), a request-out component (Tsai: 12 of FIG. 1), and an attached response component (Sahai: par 0051-0052);

the markup content handler component is included in the execution environment configured for receiving, by a user agent node via a network from a server node, a first resource including a first attach markup element (Tsai: 18 of FIG. 1; par 0041; Sahai: par 0012 [*…a tag is appended to interactions such as requests and responses. The appended tag is typically header information for a document (e.g. an XML document) that represents the interaction.*]);

the request-out component is included in the execution environment for sending, by the user agent node via the network to the server node, a first HTTP request message including a first HTTP request-line identifying a first command (Tsai: FIG. 1 [*GET /logo.jpg HTTP/1.1*]) and sending a second HTTP request message including a second HTTP request-line identifying a second command (Tsai: FIG. 1 [*GET /rollover.gif HTTP/1.1*]); and

the attached response component is included in the execution environment configured for, based on the first markup element (Sahai: par 0051-0052), receiving, in a second HTTP response message to the second HTTP request message, at least a portion of a first command response for the first command (Tsai: Fig. 1 [*HTTP/1.1 200*

OK Content-Type: image/gif]), at least a portion of a first command response to a first command identified by a first HTTP request-line in the first HTTP request message (Sahai: par 0037; 0041 [*…a single response may correspond to multiple requests.*]).

10. Regarding claim 20, a non-transitory computer readable medium embodying a computer program (Tsai: par 0066), executable by a machine, for processing an attached command response based on a markup element, the computer program comprising executable instructions for:

sending, by a server node via a network to a user agent node, a first resource including a first attach markup element (Tsai: 18 of FIG. 1; par 0041; Sahai: par 0012 [*…a tag is appended to interactions such as requests and responses. The appended tag is typically header information for a document (e.g. an XML document) that represents the interaction.*]);

receiving, by the server node via the network from the user agent node, a first HTTP request message (Tsai: FIG. 1 [*GET /logo.jpg HTTP/1.1*]) and receiving, by the server node via the network from the user agent node, a second HTTP request message (Tsai: FIG. 1 [*GET /rollover.gif HTTP/1.1*]) and

based on the first attach markup element (Sahai: par 0051-0052), sending, by the server node to the user agent node in a second HTTP response message, the HTTP second request message including a second HTTP request-line identifying a second command (Tsai: Fig. 1 [*HTTP/1.1 200 OK Content-Type: image/gif*]), at least a portion of a first command response to a first command identified by a first HTTP

request-line in the first HTTP request message (Sahai: par 0037; 0041 [*…a single response may correspond to multiple requests.*]).

11. Regarding claim 21, a non-transitory computer readable medium embodying a computer program (Tsai: par 0066), executable by a machine, for processing an attached command response based on a markup element, the computer program comprising executable instructions for:

receiving, by a user agent node via a network from a server node, a first resource including a first attach markup element (Tsai: 18 of FIG. 1; par 0041; Sahai: par 0012 [*…a tag is appended to interactions such as requests and responses. The appended tag is typically header information for a document (e.g. an XML document) that represents the interaction.*]);

sending, by the user agent node via the network to the server node, a first HTTP request message including a first HTTP request-line identifying a first command (Tsai: FIG. 1 [*GET /logo.jpg HTTP/1.1*]) and sending a second HTTP request message including a second HTTP request-line identifying a second command (Tsai: FIG. 1 [*GET /rollover.gif HTTP/1.1*]), wherein, at least one the first request message and the second request message and

based on the first markup element (Sahai: par 0051-0052), receiving, in a second HTTP response message to the second HTTP request message, at least a portion of a first command response for the first command (Sahai: par 0037; 0041 [*…a single*

response may correspond to multiple requests.]).

12. Regarding claim 22, the method of claim 1 further includes sending, to the user agent node by the server node prior completing processing of the first command by the server node, a first HTTP response message to the first HTTP request message (Sahai: par 0037).

13. Regarding claim 23, the method of claim 1 wherein the first HTTP request message identifies an attach-request condition, based on the first attach markup element, and sending the second HTTP response message includes detecting that the attach-request condition is met (Sahai: par 0012 [*…a tag is appended to interactions such as requests and responses. The appended tag is typically header information for a document (e.g. an XML document) that represents the interaction.*]).

14. Regarding claim 24, the method of claim 4 wherein sending the second HTTP response message includes detecting, in at least one of the first HTTP request-line and the second HTTP request-line, an HTTP method token defined by the HTTP protocol (Tsai: FIG. 1 [*GET*]) for determining at least one of that the first command response is attachable and that the second HTTP response message is attachable (Sahai: par 0012 [*…a tag is appended to interactions such as requests and responses. The appended tag is typically header information for a document (e.g. an XML document) that*

represents the interaction.]).

15. Regarding claim 25, the method of claim 4 wherein the first attach markup element is a parent markup element (header) including a descendent markup element, wherein the parent markup element is defined to indicate that at least one of the first command response is attachable and the second HTTP response message is attachable (Sahai: par 0012 [*…a tag is appended to interactions such as requests and responses. The appended tag is typically header information for a document (e.g. an XML document) that represents the interaction.*]), wherein at least one of the first HTTP request-line and the second HTTP request-line is identified based on the descendent markup element (Sahai: par 0012 [*…a tag is appended to interactions such as requests and responses. The appended tag is typically header information for a document (e.g. an XML document) that represents the interaction.*]).

16. Regarding claim 26, the method of claim 4 wherein the first attach markup element is a descendent markup element included in a parent markup element, wherein the descendent markup element is defined to indicate that at least one of the first command response is attachable and the second HTTP response message is attachable, wherein at least one of the first HTTP request-line and the second HTTP request-line is identified based on the parent markup element.

17. Regarding claim 27, the method of claim 4 wherein the method includes;

deferring, by the server node, processing of the first command request (Sahai: par 0037); and

generating the at least a portion of the first command response in response to the determining (Sahai: par 0037).

18. Regarding claim 28, the method of claim 11 wherein the first HTTP response message includes no portion of the first command response to the first command (Sahai: par 0037).

19. Regarding claim 29, the method of claim 11 wherein at least one of the first HTTP request message and the second HTTP request message includes an HTTP method token defined by the HTTP protocol (Tsai: see FIG. 1 [*GET*]) for determining at least one of that the first command response is an attachable command response and that the second HTTP response message is an attachable response message (Sahai: par 0012 [*…a tag is appended to interactions such as requests and responses. The appended tag is typically header information for a document (e.g. an XML document) that represents the interaction.*]).

20. Regarding claim 30, the method of claim 12 wherein the first attach markup element is included in a markup element (header) specifying at least one of a hyperlink (Tsai: FIG. 1 [*GET /logo.jpg HTTP/1.1*]), user input control, an event, and at least a

portion of a form.

21. Regarding claim 31, the method of claim 12 wherein the first attach markup element is a parent markup element (header) (Sahai: par 0012 [*…a tag is appended to interactions such as requests and responses. The appended tag is typically header information for a document (e.g. an XML document) that represents the interaction.*]) including a descendent markup element (Sahai: par 0061 – elements in table),

wherein the parent markup element is defined to indicate that at least one of the first command response is an attachable command response and the second HTTP response message is an attachable response message (Sahai: par 0012 [*…a tag is appended to interactions such as requests and responses. The appended tag is typically header information for a document (e.g. an XML document) that represents the interaction.*]),

wherein at least one of the first command and the second command is identified based on the descendent markup element (Sahai: par 0061 – elements in table).

22. Regarding claim 32, the method of claim 12 wherein the first attach markup element is a descendent markup element included in a parent markup element (header) (Sahai: par 0012 [*…a tag is appended to interactions such as requests and responses. The appended tag is typically header information for a document (e.g. an XML document) that represents the interaction.*]),

wherein the descendent markup element is defined to indicate that at least one of

the first command response is an attachable command response and the second HTTP response message is an attachable response message (Sahai: par 0012 [*…a tag is appended to interactions such as requests and responses. The appended tag is typically header information for a document (e.g. an XML document) that represents the interaction.*]),

wherein at least one of the first command and the second command is identified based on the parent markup element (Sahai: par 0012 [*…a tag is appended to interactions such as requests and responses. The appended tag is typically header information for a document (e.g. an XML document) that represents the interaction.*]).

23. Regarding claim 33, the method of claim 17 wherein the first HTTP response message includes no portion of the first command response to the first command (Sahai: par 0037).

Response to Arguments

24. Applicant's arguments, filed 25 May 2013, have been fully considered and are discussed in detail below.

25. The amendments are sufficient to overcome the rejection of claims 18-21 under 35 U.S.C. § 101.

26. The remaining arguments are moot in view of the new grounds of rejection presented herein, which were necessitated by amendment.

Conclusion

5. Applicant's amendment necessitated the new ground(s) of rejection presented in this Office action. Accordingly, **THIS ACTION IS MADE FINAL**. See MPEP § 706.07(a). Applicant is reminded of the extension of time policy as set forth in 37 CFR 1.136(a).

A shortened statutory period for reply to this final action is set to expire THREE MONTHS from the mailing date of this action. In the event a first reply is filed within TWO MONTHS of the mailing date of this final action and the advisory action is not mailed until after the end of the THREE-MONTH shortened statutory period, then the shortened statutory period will expire on the date the advisory action is mailed, and any extension fee pursuant to 37 CFR 1.136(a) will be calculated from the mailing date of the advisory action. In no event, however, will the statutory period for reply expire later than SIX MONTHS from the date of this final action.

Any inquiry concerning this communication or earlier communications from the examiner should be directed to JAMES CONAWAY whose telephone number is (571)270-5640. The examiner can normally be reached on Monday - Friday 8:30-5:00.

If attempts to reach the examiner by telephone are unsuccessful, the examiner's supervisor, JOSEPH AVELLINO can be reached on 571-272-3905. The fax phone

number for the organization where this application or proceeding is assigned is 571-273-8300.

Information regarding the status of an application may be obtained from the Patent Application Information Retrieval (PAIR) system. Status information for published applications may be obtained from either Private PAIR or Public PAIR. Status information for unpublished applications is available through Private PAIR only. For more information about the PAIR system, see http://pair-direct.uspto.gov. Should you have questions on access to the Private PAIR system, contact the Electronic Business Center (EBC) at 866-217-9197 (toll-free). If you would like assistance from a USPTO Customer Service Representative or access to the automated information system, call 800-786-9199 (IN USA OR CANADA) or 571-272-1000.

/J. C./
Examiner, Art Unit 2454

/Joseph E. Avellino/
Supervisory Patent Examiner, Art Unit 2454

Notice of References Cited	Application/Control No. 12/789,538	Applicant(s)/Patent Under Reexamination MORRIS, ROBERT PAUL	
	Examiner JAMES CONAWAY	Art Unit 2454	Page 1 of 1

U.S. PATENT DOCUMENTS

*		Document Number Country Code-Number-Kind Code	Date MM-YYYY	Name	Classification
*	A	US-2003/0009545 A1	01-2003	Sahai et al.	709/223
*	B	US-2010/0156889 A1	06-2010	Martinez et al.	345/418
*	C	US-8,346,853 B2	01-2013	Morris, Robert Paul	709/203
	D	US-			
	E	US-			
	F	US-			
	G	US-			
	H	US-			
	I	US-			
	J	US-			
	K	US-			
	L	US-			
	M	US-			

FOREIGN PATENT DOCUMENTS

*		Document Number Country Code-Number-Kind Code	Date MM-YYYY	Country	Name	Classification
	N					
	O					
	P					
	Q					
	R					
	S					
	T					

NON-PATENT DOCUMENTS

*		Include as applicable: Author, Title Date, Publisher, Edition or Volume, Pertinent Pages)
	U	
	V	
	W	
	X	

*A copy of this reference is not being furnished with this Office action. (See MPEP § 707.05(a).)
Dates in MM-YYYY format are publication dates. Classifications may be US or foreign.

Doc code: IDS
Doc description: Information Disclosure Statement (IDS) Filed

PTO/SB/08a (01-10)
Approved for use through 07/31/2012. OMB 0651-0031
U.S. Patent and Trademark Office; U.S. DEPARTMENT OF COMMERCE
Under the Paperwork Reduction Act of 1995, no persons are required to respond to a collection of information unless it contains a valid OMB control number.

INFORMATION DISCLOSURE STATEMENT BY APPLICANT (Not for submission under 37 CFR 1.99)		
	Application Number	12789538
	Filing Date	2010-05-28
	First Named Inventor	Robert Paul Morris
	Art Unit	244
	Examiner Name	James E Conaway
	Attorney Docket Number	0147-SP

U.S.PATENTS Remove

Examiner Initial*	Cite No	Patent Number	Kind Code[1]	Issue Date	Name of Patentee or Applicant of cited Document	Pages,Columns,Lines where Relevant Passages or Relevant Figures Appear
	1					

If you wish to add additional U.S. Patent citation information please click the Add button. Add

U.S.PATENT APPLICATION PUBLICATIONS Remove

Examiner Initial*	Cite No	Publication Number	Kind Code[1]	Publication Date	Name of Patentee or Applicant of cited Document	Pages,Columns,Lines where Relevant Passages or Relevant Figures Appear
	1	20040148328	A1	2004-07-29	MATSUSHIMA	
	2	20080155016	A1	2008-06-26	TSAI	
	3	20060023652	A1	2006-02-02	VENDANTHAM	
	4	20110246553	A1	2011-10-06	Somani	
	5	20050060427	A1	2005-03-17	Phillips	

If you wish to add additional U.S. Published Application citation information please click the Add button. Add

FOREIGN PATENT DOCUMENTS Remove

EFS Web 2.1.17

ALL REFERENCES CONSIDERED EXCEPT WHERE LINED THROUGH. /J.C./

INFORMATION DISCLOSURE STATEMENT BY APPLICANT (Not for submission under 37 CFR 1.99)		
	Application Number	12789538 12789538 - GAU: 2454
	Filing Date	2010-05-28
	First Named Inventor	Robert Paul Morris
	Art Unit	244
	Examiner Name	James E Conaway
	Attorney Docket Number	0147-SP

Examiner Initial*	Cite No	Foreign Document Number[3]	Country Code[2] ¡	Kind Code[4]	Publication Date	Name of Patentee or Applicant of cited Document	Pages,Columns,Lines where Relevant Passages or Relevant Figures Appear	T[5]
	1							☐

If you wish to add additional Foreign Patent Document citation information please click the Add button Add

NON-PATENT LITERATURE DOCUMENTS Remove

Examiner Initials*	Cite No	Include name of the author (in CAPITAL LETTERS), title of the article (when appropriate), title of the item (book, magazine, journal, serial, symposium, catalog, etc), date, pages(s), volume-issue number(s), publisher, city and/or country where published.	T[5]
	1	Berners-Lee, T, "The Original HTTP as defined in 1991", 1991, W3C	☐
	2	Berners-Lee, T, "Basic HTTP as defined in 1992", 1992, W3C	☐
	3	Berners-Lee, T, et al.,"Hypertext Transfer Protocol -- HTTP/1.0", RFC 1945, May, 1996, IETF	☐
	4	Box, D, et al.,"Simple Object Access Protocol (SOAP) 1.1", W3C Note 2000-05-08, W3C	☐
	5	Gudgin, M, et al.,"SOAP Version 1.2 Part 1: Messaging Framework", 2nd Edition,, W3C Recommendation, 2007-04-27, W3C	☐
	6	Fielding, R, "Hypertext Transfer Protocol -- HTTP/1.1", RFC 2068, Janary, 1997, IETF	☐

If you wish to add additional non-patent literature document citation information please click the Add button Add

EFS Web 2.1.17 ALL REFERENCES CONSIDERED EXCEPT WHERE LINED THROUGH. /J.C./

INFORMATION DISCLOSURE STATEMENT BY APPLICANT (Not for submission under 37 CFR 1.99)	Application Number	12789538 12789538 - GAU: 2454
	Filing Date	2010-05-28
	First Named Inventor	Robert Paul Morris
	Art Unit	244
	Examiner Name	James E Conaway
	Attorney Docket Number	0147-SP

EXAMINER SIGNATURE			
Examiner Signature	/James Conaway/	Date Considered	06/04/2013

*EXAMINER: Initial if reference considered, whether or not citation is in conformance with MPEP 609. Draw line through a citation if not in conformance and not considered. Include copy of this form with next communication to applicant.

[1] See Kind Codes of USPTO Patent Documents at www.USPTO.GOV or MPEP 901.04. [2] Enter office that issued the document, by the two-letter code (WIPO Standard ST.3). [3] For Japanese patent documents, the indication of the year of the reign of the Emperor must precede the serial number of the patent document. [4] Kind of document by the appropriate symbols as indicated on the document under WIPO Standard ST.16 if possible. [5] Applicant is to place a check mark here if English language translation is attached.

ALL REFERENCES CONSIDERED EXCEPT WHERE LINED THROUGH. /J.C./

Index of Claims	Application/Control No.	Applicant(s)/Patent Under Reexamination
	12789538	MORRIS, ROBERT PAUL
	Examiner	**Art Unit**
	JAMES CONAWAY	2454

✓	Rejected	-	Cancelled	N	Non-Elected	A	Appeal
=	Allowed	÷	Restricted	I	Interference	O	Objected

☐ Claims renumbered in the same order as presented by applicant ☐ CPA ☐ T.D. ☐ R.1.47

CLAIM		DATE								
Final	Original	02/13/2013	06/04/2013							
	1	✓	✓							
	2	✓	-							
	3	✓	-							
	4	✓	✓							
	5	✓	-							
	6	✓	-							
	7	✓	-							
	8	✓	-							
	9	✓	-							
	10	✓	-							
	11	✓	✓							
	12	✓	✓							
	13	✓	-							
	14	✓	-							
	15	✓	-							
	16	✓	-							
	17	✓	✓							
	18	✓	✓							
	19	✓	✓							
	20	✓	✓							
	21	✓	✓							
	22		✓							
	23		✓							
	24		✓							
	25		✓							
	26		✓							
	27		✓							
	28		✓							
	29		✓							
	30		✓							
	31		✓							
	32		✓							
	33		✓							

EAST Search History

EAST Search History (Prior Art)

Ref #	Hits	Search Query	DBs	Default Operator	Plurals	Time Stamp
L1	2	"US 20110295932"	US-PGPUB; USPAT; USOCR; FPRS; EPO; JPO; DERWENT; IBM_TDB	OR	ON	2013/06/06 17:58
L2	6	US-7587450-$.DID. OR US-20070150814-$.DID. OR US-20090254627-$.DID. OR US-20090144753-$.DID. OR US-20080077653-$.DID. OR US-20070005725-$.DID.	US-PGPUB; USPAT; USOCR; JPO	OR	ON	2013/06/06 17:58
L3	124	(HTTP XML SOAP) near3 (request message) same (attach$3 attachment) near3 (element node attribute)	US-PGPUB; USPAT; USOCR; FPRS; EPO; JPO; DERWENT; IBM_TDB	OR	ON	2013/06/06 17:58
L4	37763	morris.in.	US-PGPUB; USPAT; USOCR; FPRS; EPO; JPO; DERWENT; IBM_TDB	OR	ON	2013/06/06 17:58
L5	19494	709/203.ccls.	US-PGPUB; USPAT; USOCR; FPRS; EPO; JPO; DERWENT; IBM_TDB	OR	ON	2013/06/06 17:58
L6	65460	(aggregat$3 combin$3 combination embed embedd$3) near3 (request messag$3)	US-PGPUB; USPAT; USOCR; FPRS; EPO; JPO; DERWENT; IBM_TDB	OR	ON	2013/06/06 17:58
L7	5	L6 same L3	US-PGPUB; USPAT; USOCR; FPRS; EPO; JPO; DERWENT; IBM_TDB	OR	ON	2013/06/06 17:58
L8	10526	(HTTP XML SOAP) near3 (request message) same (element node attribute)	US-PGPUB; USPAT; USOCR; FPRS; EPO; JPO; DERWENT; IBM_TDB	OR	ON	2013/06/06 17:58
L9	65460	(aggregat$3 combin$3 combination embed embedd$3) near3 (request messag$3)	US-PGPUB; USPAT; USOCR; FPRS; EPO; JPO; DERWENT; IBM_TDB	OR	ON	2013/06/06 17:58
L10	206	L8 same L9	US-PGPUB; USPAT; USOCR; FPRS; EPO; JPO; DERWENT;	OR	ON	2013/06/06 17:58

			IBM_TDB			
L11	54	L10 same (response respond$3)	US-PGPUB; USPAT; USOCR; FPRS; EPO; JPO; DERWENT; IBM_TDB	OR	ON	2013/06/06 17:58
L12	37763	morris.in.	US-PGPUB; USPAT; USOCR; FPRS; EPO; JPO; DERWENT; IBM_TDB	OR	ON	2013/06/06 17:58
L13	124	(HTTP XML SOAP) near3 (request message) same (attach$3 attachment) near3 (element node attribute)	US-PGPUB; USPAT; USOCR; FPRS; EPO; JPO; DERWENT; IBM_TDB	OR	ON	2013/06/06 17:58
L14	5	L12 and L13	US-PGPUB; USPAT; USOCR; FPRS; EPO; JPO; DERWENT; IBM_TDB	OR	ON	2013/06/06 17:58
L15	2	"20040148328".pn.	US-PGPUB; USPAT; USOCR; FPRS; EPO; JPO; DERWENT; IBM_TDB	OR	ON	2013/06/06 17:58
L16	2	"20080155016".pn.	US-PGPUB; USPAT; USOCR; FPRS; EPO; JPO; DERWENT; IBM_TDB	OR	ON	2013/06/06 17:58
L17	258	(HTTP XML SOAP) near3 (request message) same (attach$3 attachment) near3 (element node attribute markup tag meta metadata)	US-PGPUB; USPAT; USOCR; FPRS; EPO; JPO; DERWENT; IBM_TDB	OR	ON	2013/06/06 17:58
L18	42	L17 same (respond$3 response)	US-PGPUB; USPAT; USOCR; FPRS; EPO; JPO; DERWENT; IBM_TDB	OR	ON	2013/06/06 17:58
L19	3	"6401131".pn.	US-PGPUB; USPAT; USOCR; FPRS; EPO; JPO; DERWENT; IBM_TDB	OR	ON	2013/06/06 17:58
L20	6	US-20040148328-$.DID. OR US-20080155016-$.DID. OR US-20060023652-$.DID. OR US-20050060427-$.DID. OR US-1331018-$.DID.	US-PGPUB; USPAT; USOCR; JPO	OR	ON	2013/06/06 17:58
L21	2	"20030009545".pn.	US-PGPUB; USPAT; USOCR; FPRS; EPO; JPO; DERWENT; IBM_TDB	OR	ON	2013/06/06 17:58
L22	215	(attach attachable).clm. AND morris.in.	US-PGPUB; USPAT; USOCR; FPRS; EPO; JPO; DERWENT;	OR	ON	2013/06/06 17:58

			IBM_TDB			
L23	1	(attach attachable).clm. AND (markup adj element).clm. AND morris.in.	US-PGPUB; USPAT; USOCR; FPRS; EPO; JPO; DERWENT; IBM_TDB	OR	ON	2013/06/06 17:58
L24	3	"6401131".pn.	US-PGPUB; USPAT; USOCR; FPRS; EPO; JPO; DERWENT; IBM_TDB	OR	ON	2013/06/06 17:58
L25	2	"20100156889".pn.	US-PGPUB; USPAT; USOCR; FPRS; EPO; JPO; DERWENT; IBM_TDB	OR	ON	2013/06/06 17:58

EAST Search History (Interference)

Ref #	Hits	Search Query	DBs	Default Operator	Plurals	Time Stamp
L26	1	Morris.in. AND ((attach$3 attachable) AND HTTP AND request$3 AND respon$4).clm.	USPAT	OR	ON	2013/06/06 17:58

6/6/2013 6:04:24 PM
C:\Users\jconaway\Documents\EAST\Workspaces\12789538.wsp

Search Notes	Application/Control No.	Applicant(s)/Patent Under Reexamination
	12789538	MORRIS, ROBERT PAUL
	Examiner	**Art Unit**
	JAMES CONAWAY	2454

CPC- SEARCHED

Symbol	Date	Examiner

CPC COMBINATION SETS - SEARCHED

Symbol	Date	Examiner

US CLASSIFICATION SEARCHED

Class	Subclass	Date	Examiner
709	203	6/4/2013	JC

SEARCH NOTES

Search Notes	Date	Examiner
EAST Inventor & Assignee Search	6/4/2013	JC
EAST class-limited search	6/4/2013	JC
EAST text-based search	6/4/2013	JC

INTERFERENCE SEARCH

US Class/ CPC Symbol	US Subclass / CPC Group	Date	Examiner

IN THE UNITED STATES PATENT AND TRADEMARK OFFICE

In re Patent Application of:	Mail Stop: Amendment
Robert Paul Morris	Group Art Unit: 2454
Application No.:12/789,538	Examiner: Conaway, James E
Filed: May 28, 2010	Confirmation No.: 8814
For: Methods, Systems, and Program Products for Processing an Attached Command Response Based on a Markup Element	

* *

AMENDMENT UNDER 37 C.F.R. §1.111

Mail Stop: Amendment
Commissioner for Patents
P.O. Box 1450
Alexandria, VA 22313-1450

Sir:

This paper is responsive to the Office Action mailed February 26, 2013, for which a shortened statutory period for reply is set to expire on May 26, 2013. Entry and favorable consideration of the following Amendments and/or Remarks is respectfully requested.

Amendments to the Specification begin on page 2 of this paper.

Amendments to the Claims are reflected in the Listing of Claims that begins on page 4 of this paper.

Remarks begin on page 11 of this paper.

.

Amendments to the Specification:

Note: Amendments to the spec are strikethrough deletions and underline insertions. Only a marked up copy is required.

Please replace paragraphs 0001:

[0003] Application No. 12/789,550~~/___,___~~ (Docket No 0148) filed on 2010/05/28, entitled "Methods, Systems, and Program Products for Processing a Non-returnable Command Response Based on a Markup Element";

Please replace paragraphs 0005:

[0005] Application No. 12/789,568~~/___,___~~ (Docket No 0152) filed on 2010/05/28, entitled "Methods, Systems, and Program Products for Processing a Combined Command Response Based on a Markup Element".

Please replace paragraph 0092:

[0092] Fig. 9a illustrates markup **900a** including attach markup element **902a** as an attribute in a hyperlink markup information **904a** as a hypertext markup language (HTML) anchor tag "<a/>". Fig. 9b illustrates markup **900b** including attach[[ ]]able form markup element **900b** as an HTML <form> element. An input tag markup element **902b** includes "attachable" as a portion of a value for a type attribute in <input> tag **904b**. In the value "submit/attachable", the portion "attachable" may identify a subtype of the input type. In Fig. 7, submit-don't-wait UI element **712a** may be a visual representation based on <input> tag **904b**. Fig. 9c illustrates markup **900c** including attach markup element **902c** as parameter to an "onblur" event attribute **904c** in an HTML <input> tag **906c**. Fig. 9d illustrates markup **900d** including attach markup element **902d** as an <attach> tag. Attach markup element **902d** is a parent markup tag including a <form> tag **904d**, which includes a number of descendent markup elements defined by the nested structure of the markup language. As a parent tag, attach markup element **902d** may be defined to indicate that commands identified by descendent markup elements have attachable command responses and/or to indicate that request messages generated based on

the identified commands have attachable response messages according to various aspects. The attach markup elements illustrated in Fig. 9a, Fig. 9b, Fig. 9c, and Fig. 9c may be processed to generate attach-request information for including in respective request messages including command information based on the respective markup information in Fig. 9a, Fig. 9b, Fig. 9c, and Fig. 9d.

Please replace paragraph 0125:

[0125] In a further aspect, a command, having an attachable command response, may be a command for which processing may be deferred by a server. Such a command may be performed and/or its attachable command response may be generated in response to determining that a response message is attachable. The response message ~~command~~ may include the command response as an attached command response. A determination to defer processing of the command and to process the command in response to determining that a response message is attachable may be performed by attach director component **554** in Fig. 5 interoperating with one or more command handler components **516** for processing the particular command.

Amendments to the Claims:

This listing of claims will replace all prior versions, and listings, of claims in the application:

1. (Currently Amended) A method for processing an attached command response based on a markup element, the method comprising:

sending, by a server node via a network to a user agent node, a first resource including a first attach markup element;

receiving, by the server node via the network from the user agent node, a first HTTP request message ~~identifying a first command~~ and receiving, by the server node via the network from the user agent node, a second HTTP request message ~~identifying a second command, wherein, based on the first attach markup element, at least one of the first request message includes first attach-request information and the second request message includes second attach-request information~~;

~~determining at least one of that a first command response, to the first command is an attachable command response based on the first attach-request information and that a second response message, to the second request message is an attachable response message based on the second attach-request information;~~ and

~~in response to the determination,~~ based on the first attach markup element, sending, by the server node to the user agent node in [[the]]a second HTTP response message~~, an attached command response including~~ to the HTTP second request message including a second HTTP request-line identifying a second command, at least a portion of [[the]]a first command response to a first command identified by a first HTTP request-line in the first HTTP request message.

2. (Cancelled)

3. (Cancelled)

4. (Currently Amended) The method of claim [[3]]1 wherein sending the second HTTP response message ~~determining that the second response message is attachable~~ includes at least one of determining that the second HTTP response message is attachable ~~based on~~ and determining the first command response is attachable.

5. (Cancelled)

6. (Cancelled)

7. (Cancelled)

8. (Cancelled)

9. (Cancelled).

10. (Cancelled).

11. (Currently Amended) The method of claim 1 further includes sending to the user agent node a first HTTP response message to the first HTTP request message including at most the portion of the first command response~~, in response to determining that the first command response is attachable~~.

12. (Currently Amended) A method for processing an attached command response based on a markup element, the method comprising:

receiving, by a user agent node via a network from a server node, a first resource including a first attach markup element;

sending, by the user agent node via the network to the server node, a first request message including a first HTTP request-line identifying a first command and sending a second HTTP request message including a second HTTP request-line identifying a second command~~, wherein, based on the first attach markup element, at least one the first request message includes first attach-request information and the second request message includes second attach-request information~~; and

~~in response to sending at least one of the first attach-request information and the second attach-request information,~~ based on the first markup element, receiving, in a second HTTP response message to the second HTTP request message,~~ an attached command response including~~ at least a portion of a first command response for the first command.

13. (Cancelled)

14. (Cancelled)

15. (Cancelled)

16. (Cancelled)

17. (Currently Amended) The method of claim 12 further includes receiving from the server node a first HTTP response message to the first request HTTP message including at most the portion of the first command response, in response to sending the first HTTP request message identifying the first command ~~determined to be attachable by the server node~~.

18. (Currently Amended) A system for processing an attached command response based on a markup element, the system comprising:

an execution environment including a processor ~~an instruction-processing unit configured to process an~~ that executes an instruction included in at least one of a resource generator component, a request-in component, an attach director component, and a response-out component;

the resource generator component is included in the execution environment ~~configured~~ for sending, by a server node via a network to a user agent node, a first resource including a first attach markup element;

the request-in component is included in the execution environment ~~configured~~ for receiving, by the server node via the network from the user agent node, a first HTTP request message ~~identifying a first command~~ and receiving, by the server node via the network from the user agent node, a second HTTP request message ~~identifying a second command, wherein, based on the first attach markup element, at least one of the first request message includes first attach-request information and the second request message includes second attach-request information~~;

~~the attach director component configured for determining at least one of that a first command response to the first command is an attachable command response based on the first attach-request information and that a second response message to the second request message is an attachable response message based on the second attach-request information;~~ and

the response-out component is included in the execution environment ~~configured~~ for, ~~in response to the determination,~~ based on the first attach markup element, sending, by the server node to the user agent node in [[the]]a second HTTP response message~~, an attached command response including~~, to the HTTP second request message including a second HTTP request-line

identifying a second command, at least a portion of [[the]]a first command response to a first command identified by a first HTTP request-line in the first HTTP request message.

19. (Currently Amended) A system for processing an attached command response based on a markup element, the system comprising:

an execution environment including a processor ~~an instruction-processing unit configured to process an~~ that executes an instruction included in at least one of a markup content handler component, a request-out component, and an attached response component;

the markup content handler component is included in the execution environment ~~configured~~ for receiving, by a user agent node via a network from a server node, a first resource including a first attach markup element;

the request-out component is included in the execution environment ~~configured~~ for sending, by the user agent node via the network to the server node, a first HTTP request message including a first HTTP request-line identifying a first command and sending a second HTTP request message including a second HTTP request-line identifying a second command~~, wherein, based on the first attach markup element, at least one the first request message includes first attach-request information and the second request message includes second attach-request information~~; and

the attached response component is included in the execution environment ~~configured~~ for, ~~in response to sending at least one of the first attach-request information and the second attach-request information,~~ based on the first markup element, receiving, in a second HTTP response message to the second HTTP request message, ~~an attached command response including~~ at least a portion of a first command response for the first command.

20. (Currently Amended) A non-transitory computer readable medium embodying a computer program, executable by a machine, for processing an attached command response based on a markup element, the computer program comprising executable instructions for:

sending, by a server node via a network to a user agent node, a first resource including a first attach markup element;

receiving, by the server node via the network from the user agent node, a first HTTP request message ~~identifying a first command~~ and receiving, by the server node via the network from the user agent node, a second HTTP request message ~~identifying a second command, wherein, based on the first attach markup element, at least one of the first request message~~

~~includes first attach-request information and the second request message includes second attach-request information~~;

~~determining at least one of that a first command response, to the first command is an attachable command response based on the first attach-request information and that a second response message, to the second request message is an attachable response message based on the second attach-request information;~~ and

~~in response to the determination,~~ based on the first attach markup element, sending, by the server node to the user agent node in [[the]]a second HTTP response message~~, an attached command response including~~, to the HTTP second request message including a second HTTP request-line identifying a second command, at least a portion of [[the]]a first command response to a first command identified by a first HTTP request-line in the first HTTP request message.

21. (Currently Amended) A non-transitory computer readable medium embodying a computer program, executable by a machine, for processing an attached command response based on a markup element, the computer program comprising executable instructions for:

receiving, by a user agent node via a network from a server node, a first resource including a first attach markup element;

sending, by the user agent node via the network to the server node, a first HTTP request message including a first HTTP request-line identifying a first command and sending a second HTTP request message including a second HTTP request-line identifying a second command, wherein~~, based on the first attach markup element,~~ at least one the first request message~~ includes first attach-request information~~ and the second request message~~ includes second attach-request information~~; and

~~in response to sending at least one of the first attach-request information and the second attach-request information,~~ based on the first markup element, receiving, in a second HTTP response message to the second HTTP request message,~~ an attached command response including~~ at least a portion of a first command response for the first command.

22. (New) The method of claim 1 further includes sending, to the user agent node by the server node prior completing processing of the first command by the server node, a first HTTP response message to the first HTTP request message.

23. (New) The method of claim 1 wherein the first HTTP request message identifies an attach-request condition, based on the first attach markup element, and sending the second HTTP response message includes detecting that the attach-request condition is met.

24. (New) The method of claim 4 wherein sending the second HTTP response message includes detecting, in at least one of the first HTTP request-line and the second HTTP request-line, an HTTP method token defined by the HTTP protocol for determining at least one of that the first command response is attachable and that the second HTTP response message is attachable.

25. (New) The method of claim 4 wherein the first attach markup element is a parent markup element including a descendent markup element, wherein the parent markup element is defined to indicate that at least one of the first command response is attachable and the second HTTP response message is attachable, wherein at least one of the first HTTP request-line and the second HTTP request-line is identified based on the descendent markup element.

26. (New) The method of claim 4 wherein the first attach markup element is a descendent markup element included in a parent markup element, wherein the descendent markup element is defined to indicate that at least one of the first command response is attachable and the second HTTP response message is attachable, wherein at least one of the first HTTP request-line and the second HTTP request-line is identified based on the parent markup element.

27. (New) The method of claim 4 wherein the method includes;

deferring, by the server node, processing of the first command request; and

generating the at least a portion of the first command response in response to the determining.

28. (New) The method of claim 11 wherein the first HTTP response message includes no portion of the first command response to the first command.

29. (New) The method of claim 11 wherein at least one of the first HTTP request message and the second HTTP request message includes an HTTP method token defined by the HTTP protocol for determining at least one of that the first command response is an attachable command response and that the second HTTP response message is an attachable response message.

30. (New) The method of claim 12 wherein the first attach markup element is included in a markup element specifying at least one of a hyperlink, user input control, an event, and at least a portion of a form.

31. (New) The method of claim 12 wherein the first attach markup element is a parent markup element including a descendent markup element, wherein the parent markup element is defined to indicate that at least one of the first command response is an attachable command response and the second HTTP response message is an attachable response message, wherein at least one of the first command and the second command is identified based on the descendent markup element.

32. (New) The method of claim 12 wherein the first attach markup element is a descendent markup element included in a parent markup element, wherein the descendent markup element is defined to indicate that at least one of the first command response is an attachable command response and the second HTTP response message is an attachable response message, wherein at least one of the first command and the second command is identified based on the parent markup element.

33. (New) The method of claim 17 wherein the first HTTP response message includes no portion of the first command response to the first command.

REMARKS:

Status Summary

Claims 1, 4, 11-12, and 17-33 are pending in the present application, of which claims 1, 12, and 18-21 are presented in independent form. Claims 22-33 added in by response. Claims 2-3, 5-10, and 13-16 are cancelled by this response. Claims 1, 4, 11-12, 17-21 are currently amended.

Amendments to the Specification

Paragraphs 0003 and 0004 are each currently amended to correctly include, by reference, US patent applications identified as related.

Paragraph 0092 corrects a typographical error that excluded the phrase "includes 'attachable'" from what was an improperly constructed sentence. This amendment is supported by Fig. 9b (see element 902b) and original paragraph 0092.

Paragraph 0125 is currently amended to correct the phrase "The command may include the command response…" (which is clearly incorrect) to "The response message may include the command response…". This amendment is supported in numerous places, for example by original claims 1 and 12.

Applicant submits that none of the amendments to the specification adds new matter.

Amendments to the Claims

With respect to currently amended claim 1, the amendment to the first element is supported by at least Fig. 8 (see data flow message 806) and paragraphs 0080 and 0082 of the present application. The amendments to the second element are supported by at least Fig. 8 (see data flow message 808) and Fig. 8 (see data flow message 810). The amendments to the fourth element are supported by at least the third element of original claim1, Fig. 8 (see data flow message 812), Fig. 5 (attach director component 554), and paragraphs 0052, 0089, 0104, and 0113; Fig. 10a-b, Fig. 11, paragraphs 0053, 0081, 0089, and 0105; Fig. 8 (see data flow message 814), Fig. 5 (attach director component 554), and paragraphs 0118; and Fig. 10c and Figs. 11b-c of the present application.

With respect to currently amended claim 4 is made so that currently amended claim 4 depends from claim 1. Claims 2 and 3 are cancelled by this response.

With respect to currently amended claim 11, the amendment is supported by at least original claim 11.

With respect to currently amended claim 12, the amendment to the first element is supported by at least Fig. 8 (see data flow message 806) and paragraphs 0080 and 0082 of the present application. The amendments to the second element are supported by at least Fig. 8 (see data flow message 808) and paragraphs 0052, 0089, and 0104; Fig. 10a-b, Fig. 11, and paragraphs 0053 and 0081; Fig. 8 (see data flow message 810) and paragraphs 0089 and 0105. The amendments to the third element are supported by at least the second element of original claim 12, Fig. 8 (see data flow message 814), Fig. 5 (attach director component 554), and paragraphs 0118; and Fig. 10c and Figs. 11b-c.

With respect to currently amended claim 17, the amendment is supported by at least original claim 17.

Claim 18 and 20 respectively include amendments analogous to those in currently amended claim 1. These amendments are respectively supported for at least the same reasons as those described for currently amended claim 1.

Claim 19 and 21 respectively include amendments analogous to those in currently amended claim 12. These amendments are respectively supported for at least the same reasons as those described for currently amended claim 12.

Claim 18 is further amended to currently amended to recite, “an execution environment including a processor ~~an instruction-processing unit configured to process an~~ that executes an instruction included in at least one of a resource generator component, a request-in component, an attach director component, and a response-out component”. Support for these amendments can be found in at least paragraphs 0038-0039, 0056, and 0058; and Figs. 1, 3a, and 5 of the present application. Further, instances of the phrase “configured for” in claim 18 are each amended to recite “is included in the execution environment ~~configured~~ for”. Support for the first amended instance is found in at least paragraphs 0078 and 0084, as well as in Fig. 5 of the present application. Support for the second amended instance is found in at least paragraphs 0084, 0106-0108, and 0128, as well as in Fig. 5 of the present application. Support for the third amended instance is found in at least paragraphs 0113, 0115-0118, 0125-0137, and 0149-0152, as well as in Fig. 5 of the present application. Support for the fourth amended instance is found

in at least paragraphs 0065, 0084, 0136-0141, and 0149-0151, as well as in Fig. 5 of the present application. See Claim Rejection(s) - 35 U.S.C. § 101 below for additional remarks.

Claim 19 is further amended to currently amended to recite, "an execution environment including a processor ~~an instruction-processing unit configured to process an~~ that executes an instruction included in at least one of a markup content handler component, a request-out component, and an attached response component". Support for these amendments can be found in at least paragraphs 0038-0039, and 0057-0058; and Figs. 1, 3b, and 4 of the present application. Further, instances of the phrase "configured for" in claim 18 are each amended to recite "is included in the execution environment ~~configured~~ for". Support for the first amended instance is found in at least paragraphs 0079 and 00940096, as well as in Fig. 4 of the present application. Support for the second amended instance is found in at least paragraphs 0084, 0088, 0090, and 0100, as well as in Fig. 4 of the present application. Support for the third amended instance is found in at least paragraphs 0142-0143 and Fig. 4 of the present application. See Claim Rejection(s) - 35 U.S.C. § 101 below for additional remarks.

Claims 20 and 21 are each currently amended to recite, "A non-transitory computer readable medium…" to clarify the respective scope of the claim. This amendment is supported in the present application by at least paragraph 0156, which identifies a number of non-transitory computer readable media. See Claim Rejection(s) - 35 U.S.C. § 101 below for additional remarks.

Support for new claim 22 is found in at least paragraph 0136 of the present application.

Support for new claim 23 is found in at least paragraph 0132 of the present application.

Support for new claim 24 is found in at least paragraph 0131, 0101, and 0104-0105 of the present application.

Support for new claim 25 is found in at least paragraph 0092 and 0112 of the present application

Support for new claim 26 is found in at least paragraph 0092 and 0112 of the present application.

Support for new claim 27 is found in at least paragraph 0125 of the present application.

Support for new claim 28 is found in at least paragraph 0148 of the present application.

Support for new claim 29 is found in at least Figs. 10b and 11a of the present application.

Support for new claim 30 is found in at least paragraph 0109, 0111, and 0092 of the present application.

Support for new claim 31 is found in at least paragraph 0092 and 0112 of the present application.

Support for new claim 32 is found in at least paragraph 0131, 0101, and 0104-0105 of the present application.

Support for new claim 33 is found in at least paragraph 0148 of the present application.

Rejection(s) - 35 U.S.C. § 101

Claims 18-21 stand rejected under 35 U.S.C. § 101 as being directed to non-statutory subject matter.

Regarding claims 18-19, the Examiner states claims 18-19 recite a "system" comprising an "execution environment" and various "components" for performing software functions. While the claim loosely recites interaction with hardware, no hardware is explicitly claimed as part of the system. Accordingly, the claims are directed to software per se. See MPEP § 2106.01.

As described above, claims 18-19 are each currently amended to recite “an execution environment including a processor that executes an instruction included in at least one of…”. In each of claims 18-19 the elements are performed by components, identified in the each of claims 18-19 respectively. The components operate in an execution environment including a processor (See paragraph 0039 which states that an IPU is a processor) for processing an instruction in at least one the components (see remarks in Amendments to the Claims). As currently amended, neither claims 18 nor claim 19 can be performed through mental steps only, since purely mental steps do not include executing or processing at least one instruction by an IPU/processor as claimed.

Accordingly, applicant respectfully submits that currently amended claims 18-19 are directed to statutory subject matter and can no longer be construed, in any embodiment, as being directed to only software, since claim 18 and claim 19 each include a processor

Regarding claim 20-21, the Examiner states claims 20-21 are directed to a "computer readable medium." According to its ordinary and customary meaning in the art, the phrase "computer readable medium" may be used to refer to media such as signals and carrier waves, which store information albeit temporarily. Accordingly, the claim is directed to non-statutory subject matter. See MPEP § 2106.01. This rejection may be overcome by amending the claims to recite a non-transitory computer readable medium.

The Examiner suggests such changes to claims 20-21 such as a "non-transitory computer readable storage medium embodying a computer program ..." in order to draw the claim to a non-

transitory computer readable storage medium, such as a portable compact disc (CD), a portable digital video disc (DVD), a high definition DVD, and a Blu-ray, such forms of non-transitory computer readable storage media disclosed in paragraph [0156] of the instant specification.

Claims 20-21 are each currently amended, as suggested by the Examiner, to recite "non-transitory computer readable medium". These respective amendments are supported by at least paragraph 0156 of the present application, which applicant respectfully submits identifies examples of non-transitory computer readable media.

For at least the above reasons, the applicant requests that the rejections of independent claims 18-21 under 35 U.S.C. §101 be withdrawn.

Claim Rejection(s) - 35 U.S.C. § 103

Claims 1-21 stand rejected under 35 U.S.C. 103(a) as being unpatentable over Kleyzit et al. (US 2011/0066676), hereinafter "Kleyzit", in view of Haverstock et al. (US 6,401,131), hereinafter "Haverstock", and further in view of Matsushima (US 2004/0148328), hereinafter "Matsushima". This ground of rejection is respectfully traversed.

Kleyzit relates to systems and methods for increasing performance of web sites and web applications. More particularly, Kleyzit relates to systems and methods for reducing web page download time and improving efficiency of web content caching (Kleyzit paragraphs 0002, 0005-0015). Kleyzit teachings relate to reducing time for a browser to access a "parent web document" (Kleyzit paragraph 0005), by reducing "page response time", which is the time between requesting a base page of a parent web document and time when an "onload" script event may occur (the occurrence of a and firing such designated event. (Kleyzit paragraph 0006); as well as "web page resource" access time for resources access after the "onload" time (Kleyzit paragraphs 0007-0010).

Matsushima's teaching enables the exchange of remote procedure call (RPC) requests/commands and responses in batches over various protocols, such as HTTP and SMTP, in the role of carriers or transports for Matsushima's RPC batch protocol. Matsushima paragraphs 0016-0018 describe batching "operation requests".

Regarding currently amended claim 1, applicant respectfully submits claim 1 is allowable for at least the feature of "based on the first attach markup element (sent to the user agent node),

sending, by the server node to the user agent node in a second HTTP response message to the HTTP second request message including a second HTTP request-line identifying a second command, at least a portion of a first command response to a first command identified by a first HTTP request-line in the first HTTP request message"

The examiner has acknowledged that Kleyzit does not teach: an attach markup element and based on the attach markup element sent to a user agent, sending, to the user agent node in the second response message, an attached command response including at least a portion of the first command response.

Indeed, Kleyzit teaches sending an HTTP response in response to each and every HTTP request (Kleyzit 0060-0061), as specified in the HTTP specification RFC2616. Kleyzit teaches receiving a batch response in response to a "special type of HTTP batch request" (Kleyzit paragraphs 0054, and Figures 2A). With respect to a user agent or web browser, Kleyzit teaches, "Web browser 108 communicates with computer network 102 via handler 202 that is designed to send batch requests and receive batch responses according to the invention…" (Kleyzit paragraphs 0055, Figures. 2A, 3). Kleyzit paragraphs 0056-0057 and Fig. 2B describe analogous embodiments operating in a reverse proxy, a gateway, and various types of caching services. Further,

Kleyzit's special HTTP batch request includes only a single request-line as per RFC 2616. Regarding the special batch request, Kleyzit teaches such a batch request contains in its payload the web addresses of the multiple resources referenced by the base page, on the server separately processing individual requests to every web address, obtaining requested resources along with their respective response headers, combining said requested resources into the batch response, sending the batch response, and loading the resources into the web browsers separately (Kleyzit paragraph 0040). More particularly, Kleyzit teaches, "Web server 104 communicates with a batch request handler 201 for handling special type of HTTP batch requests. The batch request is an aggregate request for multiple resources. The handler 201 is designed to handle such a batch request and generate a batch response that aggregates information of multiple resource responses…" (Kleyzit paragraph 0054 and Figure 2A).

The Examiner states that Haverstock teaches: an attach markup element (Haverstock: col. 5 lines 20-30; col. 10 lines 44-55) and an attachable command response (Haverstock: col. 10 lines 50-55 (i.e. at least a portion of the first command response included in the second. Applicant fails to understand what "... wherein selection of a link opens the one or more non-markup language object in the format and the one or more non-markup language objects are retrieved

with the one or more first markup language objects ...” has to do with including at least a portion of first command response to a first command in a second response message to a second request message. The amendments to claim 1 make the distinction even sharper (at least to the applicant).

Applicant respectfully submits that Haverstock fails to describe, teach, or suggest including an “attachable command response” much less the recited feature of claim 1, as currently amended. In col 5:20-30 Haverstock states, “… system 10 also permits attaching non-HTML objects to HTML objects.” Haverstock goes on to provide an example that makes it clear that “attaching” in Haverstock has nothing to do with sending a message. As such, “attaching” in Haverstock has no relationship to the recited feature of currently amended claim 1. Haverstock states, “For example, a user may attach non-HTML object 18n to HTML object 50a. Attaching files includes storing the attaching object (i.e., HTML object 50a) with the attachment (i.e. non-HTML object 18a). Additionally, a link is provided from HTML object 50a to non-HTML object 18a. The link is provided within HTML object 50n. The link identifies the location of the attachment stored with HTML object 50n. HTML objects may also be attached to non-HTML objects using the above process.” Haverstock’s object 50a is illustrates in Fig. 1 as in an HTML database 48 and object 18a is illustrated in a Non-HTML Database 16. Clearly, Haverstock is describing how an HTML object and a Non-HTML object are stored. They are “attached” by a link (not by being included together in a response to a request either in whole or in part).

That “attached” in Haverstock means linked, rather than being included together in a message in some way, is reiterated again in Haverstock col 10:44-55 quoted below for the examiner’s convenience.

> (ii) the attachment module attaches the one or more non-markup language objects to the one or more first markup language objects by storing the one or more non-markup language objects as at least a portion of the one or more first markup language objects without changing a format of the one or more non-markup language objects, thereby creating at least one second markup language object and wherein selection of a link opens the one or more non-markup language object in the format and the one or more non-markup language objects are retrieved with the one or more first markup language objects; (Haverstock col 10:44-55)

Haverstock uses the term “embed” with respect to “embedding” non-HTML objects 18a in HTML object 50a. Col 9:40-56 cited by the Examiner does not describe multiple request messages. It merely states that a “system user” may request an HTML object and may request that a non-HTML object be display in the HTML object. Haverstock says nothing about requests for either of the objects transmitted via a network. One interpretation is that Haverstock’s “system user” is an administrator of server 14. Haverstock describes storing the HTML object and non-HTML object as “another object” 55, but doesn’t describe where. All these operations may occur on server 14 without any request messages via a network. The combined object may then be retrieved with a single request via a browser.

A second interpretation involves common knowledge at the time of the present application as to how web browsers operate. Web browser’s since the early 1990’s have been able to display HTML data and non-HTML data (e.g. image data) in the HTML data in a web page in the browser. This operation is performed by sending separate HTTP requests (one for each object) by the browser. The server responds by sending an HTTP response for each respective request. The browser “embeds” the non-HTML object in the presentation of the HTML object. The browser identifies the non-HTML data via a link in the HTML data. This is exactly what Haverstock teaches, as described above (Haverstock col 9:40 through col 10:17).

Applicant respectfully submits that the Examiner provides no evidence either in Haverstock or external to Haverstock that one skilled in the art at the time of the present application would interpret Haverstock col 9:40-56 as has the examiner. Indeed, Haverstock col 9:57 through col 10:9 makes it clear Haverstock is “embedding” and/or combining HTML and non-HTML data via hyperlinks. Haverstock col 9:67 through col 10:9 is quoted below for the examiner’s convenience.

> Preferably, HTML representation 50n comprises a table tag and HTML formatting tags. HTML tags are codes used in a HTML object that determine the layout of a HTML object. Views may comprise <u>links to other views</u>. For example, an object may contain a graphical representation of a view. The representation provides a link to the view which is retrieved when <u>a user "clicks" on the representation</u>. When a system user "clicks" on the representation, a URL request for that view is transmitted to HTTP server module 65 30. HTTP server module communicates the request to URL interface 46 of interface module 32. <u>URL interface 46 converts the request into a format supported by non-H1ML server module 24</u>. <u>Non-HTML server</u>

> module 24 locates and retrieves the view requested and transmits the view to interface module 32. HTML translator 44 translates the view into HTML and passes the translated view to HTTP server module 30. HTTP server module 30 communicates the view This process may be repeated for each additional view requested by the system user. (Haverstock col 9:57 through col 10:9)

The applicant, aside from the foregoing, respectfully reminds the Examiner that the inventor is allowed to be his/her own lexicographer. Currently amended claim 1 must be interpreted in light of the definitions provided in the present application. The applicant refers the examiner in particular to paragraph 0076 of the present applicant that defines an "attachable command response" (quote it).

> [0076] A first command response for a first command identified in a first request message is referred to herein as "attachable" or as an "attachable command response" when at most a portion of the attachable command response is includable in a first response message to the first request message. The first response message may or may not be sent in various aspects. The attachable command response or a portion thereof is sent in a second response message to a second request message identifying a second command. The second response message includes at least a portion of the attachable command response. The attachable command response or portion thereof included in the second response message is herein referred to as "attached", as an "attached command response", and/or as included in an "attached command response". The second response message is referred to herein as "attachable or as an "attachable response message" before it includes the attached command response. The second response message is referred to herein as "attached" or as an "attached response message" when it includes the attached command response and/or has been transmitted via a network while including the attached command response

Still further, the Examiner acknowledges that Kleyzit-Haverstock do not teach: in response to the determination, sending, to the user agent node in the second response message, an attached command response including at least a portion of the first command response. Applicant respectfully submits that as currently amended Matsushima, Kleyzit, and Haverstock do not describe, teach, or suggest "based on the first attach markup element, sending, by the server node to the user agent node in a second HTTP response message to the HTTP second request

message including a second HTTP request-line identifying a second command, at least a portion of]a first command response to a first command identified by a first HTTP request-line in the first HTTP request message".

That Matsushima's operation requests are remote procedure calls is made clear in various portions of Matsushima including at least paragraphs [0212]-[0213] and [0477] (see also paragraphs [0196]-[0197], [0201], and [0209]). That HTTP serves a single function, namely to transport Matsushima's batch RPC protocol between nodes in a network is evident in Matsushima Figs. 5 and 6 that show command information (i.e. RPC requests and responses) in HTTP messages; in Figs. 9 and 10 that show "command sheets" stored in HTTP message-bodies; and in paragraphs [0203], [0209], and [0250].

That the HTTP request identifies the same command (as opposed to different command as recited in currently amended claim 1) at the HTTP-level is described at least in Matsushima paragraphs [0291], [0305], and [0315] describing that the message-body of every HTTP request is divided into parts for processing the RPC commands and/or responses included by components operating above the HTTP-level. In Matsushima, the HTTP command to divide the message-body is performed by a "message distribution means" component 148 in Fig. 22 as described in Matsushima paragraphs [0334] and [0354]. Further, blocks S111 and S112 in Fig 25 shows Matsushima's server processes every HTTP Request in the same manner each time. Matsushima Figs. 26 and 27 illustrate the same. Once the message-body of the HTTP message is divided, Matsushima illustrates and describes components for processing the RPC requests and responses after the dividing of the HTTP message-body.

In particular, Matsushima teaches sending, in a first HTTP request to a server node, first RPC command information, included in the message-body of the first HTTP request. The first HTTP request includes a request-line that identifies a command, at the HTTP level, to disaggregate the RPC commands to generate corresponding RPC responses. The first command information identifies a first RPC command (Matsushima: Figure 6. In HTTP REQUEST X', the client sends CLIENT RPC COMMAND B in the HTTP request message-body.). Likewise, Matsushima teaches sending, in a second HTTP request, second RPC command information identifying a second RPC command, included in the message-body of the second HTTP request (Matsushima: Figure 6. In HTTP Request Y', the client sends CLIENT RPC COMMAND D and CLIENT COMMAND E.).

The second HTTP request includes a request-line that identifies a command at the HTTP level to perform the same command as the first identified in the request-line of the first HTTP

request. That is, the command identified in the request-line of the first RPC request when executed disaggregates the RPC commands in the message-body of the second HTTP request for generating corresponding RPC responses. Fig. 6 further illustrates receiving a second HTTP response to the second HTTP request including, in the second HTTP response message-body, a RESPONSE TO CLIENT RPC COMMAND D and a RESPONSE TO CLIENT RPC COMMAND E (Matsushima: Figure 6. In HTTP Response Y', the client receives a response to CLIENT RPC COMMAND D and CLIENT RPC COMMAND E in the message-body of HTTP Response Y'.). Fig. 6 also shows that the second HTTP response includes a RESPONSE TO CLIENT RPC COMMAND B as a response to the first RPC command identified in the first HTTP Request message-body. (Matsushima: Figure 6. HTTP RESPONSE Y' also includes RESPONSE TO CLIENT RPC COMMAND B.)

As described above, the command identified in Matsushima's HTTP request is the same command instructing the HTTP server to disaggregate RPC command information included in the message-body of the HTTP Request. In addition, as described above, Matsushima's teachings require two protocols, 1) a superordinate RPC batch protocol (see at least Matsushima paragraph [0201] and [0250]) and 2) a lower-layer, subordinate protocol to communicate the RPC batch protocol between nodes in a network (see Matsushima [0477] and [0480]).

In view of the foregoing, applicant respectfully submits that Kleyzit, Haverstock, and Matsushima do not individually or in combination describe, teach, or suggest all the features of currently amended claim 1. Claims 4, 11, and 22-29 depend upon claim 1. Claims 4, 11, and 22-29 are believed to be allowable for at least the same reasons as claim 1.

Regarding claim 11, applicant respectfully submits that as currently amended Kleyzit, Haverstock, and Matsushima fail, individually and in combination, to describe, teach, or suggest the feature of claim 11 of "sending to the user agent node a first HTTP response message to the first_HTTP request message including at most the portion of the first command response".

As such, applicant respectfully submits that currently amended claim 11 is allowable.

Regarding currently amended claim 12, applicant respectfully submits claim 12 is allowable for at least the features of "based on the first markup element, receiving, in a second HTTP response message to the second HTTP request message at least a portion of a first command response for the first command" where the user agent sends, via the network to the server node, a first request message including a first HTTP request-line identifying a first

command and sends a second HTTP request message including a second HTTP request-line identifying a second command. The Examiners rejection of original claim 12 is analogous to the rejection of original claim 1.

Applicant respectfully submits that currently claim 12 is allowable for at least the same reasons as currently amended claim 1 as described above, as the amendments are analogous. Claims 17 and 30-33 are dependent upon claim 12 and believed to be allowable for at least the same reasons as claim 12.

Regarding claim 17, applicant respectfully submits that as currently amended Kleyzit, Haverstock, and Matsushima fail, individually and in combination, to describe, teach, or suggest the feature of claim 17 of "receiving from the server node a first HTTP response message to the first request HTTP message including at most the portion of the first command response, in response to sending the first HTTP request message identifying the first command".

As such, applicant respectfully submits that currently amended claim 17 is allowable.

Applicant respectfully submits that currently amended claim 18 and 20 are analogous to currently amended claim 1 is believed to be patentable for at least the same reasons.

Applicant respectfully submits that currently amended claim 19 and 21 are analogous to currently amended claim 12 is believed to be patentable for at least the same reasons.

In view of the foregoing, it is respectfully submitted that Kleyzit, Haverstock, and Matsushima fail, individually and in combination, to teach all the features of independent claims 1, 12, and 18-21. Claims 4, 11, and 22-28 are dependent upon claim 1 and believed to be allowable for at least the same reasons as claim 1. Claims 17 and 29-31 are dependent upon claim 12 and believed to be allowable for at least the same reasons as claim 12.

Applicant respectfully requests the rejections of claims 1, 4, 11-12, and 17-21 under 35 U.S.C. § 103(a) be withdrawn.

CONCLUSION

In view of the above, it is respectfully submitted that the present application is now in proper condition for allowance, and an early notice to such effect is earnestly solicited

The Examiner is respectfully requested to telephone the undersigned inventor at the below-listed number if, after reviewing the above Remarks, the Examiner believes outstanding matters remain that may be resolved without the issuance of a subsequent Official Action.

Further, if outstanding matters remain, Applicant respectfully reminds the Examiner that under MPEP 707.07(j) that "When, during the examination of a pro se application it becomes apparent to the examiner that there is patentable subject matter disclosed in the application, the examiner should draft one or more claims for the applicant and indicate in his or her action that such claims would be allowed if incorporated in the application by amendment."

DEPOSIT ACCOUNT The Commissioner is hereby authorized to charge any additional fees, or credit any overpayment, associated with the filing of this paper to Deposit Account No. 50-5171

Respectfully submitted,

/Robert Paul Morris/
Robert Paul Morris
Applicant/Inventor

Date: May 25, 2013

Customer No: 92924
712 Latta Street
Raleigh, North Carolina 27607
919.828.1792
paul.morris@nc.rr.com

Electronic Patent Application Fee Transmittal

Application Number:	12789538
Filing Date:	28-May-2010
Title of Invention:	METHODS, SYSTEMS, AND COMPUTER PROGRAM PRODUCTS FOR PROCESSING AN ATTACHED COMMAND RESPONSE BASED ON A MARKUP ELEMENT
First Named Inventor/Applicant Name:	Robert Paul Morris
Filer:	Robert Paul Morris
Attorney Docket Number:	0147-SP

Filed as Small Entity

Utility under 35 USC 111(a) Filing Fees

Description	Fee Code	Quantity	Amount	Sub-Total in USD($)
Basic Filing:				
Pages:				
Claims:				
Miscellaneous-Filing:				
Petition:				
Patent-Appeals-and-Interference:				
Post-Allowance-and-Post-Issuance:				
Extension-of-Time:				

Description	Fee Code	Quantity	Amount	Sub-Total in USD($)
Miscellaneous:				
Submission- Information Disclosure Stmt	2806	1	90	90
		Total in USD ($)		**90**

Electronic Acknowledgement Receipt	
EFS ID:	15872519
Application Number:	12789538
International Application Number:	
Confirmation Number:	8814
Title of Invention:	METHODS, SYSTEMS, AND COMPUTER PROGRAM PRODUCTS FOR PROCESSING AN ATTACHED COMMAND RESPONSE BASED ON A MARKUP ELEMENT
First Named Inventor/Applicant Name:	Robert Paul Morris
Customer Number:	92924
Filer:	Robert Paul Morris
Filer Authorized By:	
Attorney Docket Number:	0147-SP
Receipt Date:	25-MAY-2013
Filing Date:	28-MAY-2010
Time Stamp:	13:13:46
Application Type:	Utility under 35 USC 111(a)

Payment information:

Submitted with Payment	yes
Payment Type	Credit Card
Payment was successfully received in RAM	$90
RAM confirmation Number	7477
Deposit Account	505171
Authorized User	MORRIS, ROBERT PAUL
The Director of the USPTO is hereby authorized to charge indicated fees and credit any overpayment as follows: Charge any Additional Fees required under 37 C.F.R. Section 1.17 (Patent application and reexamination processing fees) Charge any Additional Fees required under 37 C.F.R. Section 1.19 (Document supply fees)	

Charge any Additional Fees required under 37 C.F.R. Section 1.21 (Miscellaneous fees and charges)

File Listing:

Document Number	Document Description	File Name	File Size(Bytes)/ Message Digest	Multi Part /.zip	Pages (if appl.)
1	Fee Worksheet (SB06)	0147-OA-NF-1-FeeWrkSheet-sb0006.pdf	160152 730b6b8bb5e6e39623810a8f6b71f8ce7970871e	no	2
Warnings:					
Information:					
2	Information Disclosure Statement (IDS) Form (SB08)	0147-IDS-US_IDS_Form__SB_08a-2.pdf	612787 efcfddc83e02488445537 61a825a6ad590128713	no	5
Warnings:					
Information:					
3	Non Patent Literature	0147-IDS-HTTP-Protocol-1992.pdf	36979 14a89fbd28a1463e541d0c0919806e1bafaee4a0	no	3
Warnings:					
Information:					
4	Non Patent Literature	0147-IDS-HTTPProtocol-Original-1991.pdf	34344 d12b5d13650704620e9525c5f1870b21edf03ada	no	2
Warnings:					
Information:					
5	Non Patent Literature	0147-IDS-rfc1945-HTTP-1-0-1996.pdf	182022 315e49b01f7007160146b10431af47e9af9594e3	no	55
Warnings:					
Information:					
6	Non Patent Literature	0147-IDS-rfc2068-HTTP-1-1-ProposedStandard-1997.pdf	379678 13dbf19c3111f9a7d5bc0b7cd05572d554ee15af	no	160
Warnings:					
Information:					
7	Non Patent Literature	0147-IDS-SOAP-Version-1-1-2000.pdf	313658 1324ba106577e0c9e0881baddb8ad8572e5d2960	no	34
Warnings:					
Information:					
8	Non Patent Literature	0147-IDS-SOAP-Version-1-2-2007.pdf	273105 3614e620f9accb509fd3c5652957fbe870729423	no	48
Warnings:					
Information:					

9		0147-OA_NF-1-Resp.pdf	224381 ebdc999d40f6096e32fbc5cd97ec0acad3e55d84	yes	23

	Multipart Description/PDF files in .zip description		
	Document Description	**Start**	**End**
	Amendment/Req. Reconsideration-After Non-Final Reject	1	1
	Specification	2	3
	Claims	4	10
	Applicant Arguments/Remarks Made in an Amendment	11	23

Warnings:

Information:

10	Fee Worksheet (SB06)	fee-info.pdf	30291 04f455137ca6668f8b7827471c94748ae93f6572	no	2

Warnings:

Information:

Total Files Size (in bytes):	2247397

This Acknowledgement Receipt evidences receipt on the noted date by the USPTO of the indicated documents, characterized by the applicant, and including page counts, where applicable. It serves as evidence of receipt similar to a Post Card, as described in MPEP 503.

New Applications Under 35 U.S.C. 111
If a new application is being filed and the application includes the necessary components for a filing date (see 37 CFR 1.53(b)-(d) and MPEP 506), a Filing Receipt (37 CFR 1.54) will be issued in due course and the date shown on this Acknowledgement Receipt will establish the filing date of the application.

National Stage of an International Application under 35 U.S.C. 371
If a timely submission to enter the national stage of an international application is compliant with the conditions of 35 U.S.C. 371 and other applicable requirements a Form PCT/DO/EO/903 indicating acceptance of the application as a national stage submission under 35 U.S.C. 371 will be issued in addition to the Filing Receipt, in due course.

New International Application Filed with the USPTO as a Receiving Office
If a new international application is being filed and the international application includes the necessary components for an international filing date (see PCT Article 11 and MPEP 1810), a Notification of the International Application Number and of the International Filing Date (Form PCT/RO/105) will be issued in due course, subject to prescriptions concerning national security, and the date shown on this Acknowledgement Receipt will establish the international filing date of the application.

Doc Code: WFEE
Document Description: Fee Worksheet (PTO-875)

PTO/SB/06 (09-11)
Approved for use through 01/31/2014. OMB 0651-0032
U.S. Patent and Trademark Office; U.S. DEPARTMENT OF COMMERCE
Under the Paperwork Reduction Act of 1995, no persons are required to respond to a collection of information unless it displays a valid OMB control number.

PATENT APPLICATION FEE DETERMINATION RECORD

Substitute for Form PTO-875

Application or Docket Number: 0147-SP

APPLICATION AS FILED – PART I

FOR	(Column 1) NUMBER FILED	(Column 2) NUMBER EXTRA	SMALL ENTITY RATE ($)	SMALL ENTITY FEE ($)	OR	OTHER THAN SMALL ENTITY RATE ($)	OTHER THAN SMALL ENTITY FEE ($)
BASIC FEE (37 CFR 1.16(a), (b), or (c))	N/A	N/A	N/A			N/A	
SEARCH FEE (37 CFR 1.16(k), (i), or (m))	N/A	N/A	N/A			N/A	
EXAMINATION FEE (37 CFR 1.16(o), (p), or (q))	N/A	N/A	N/A			N/A	
TOTAL CLAIMS (37 CFR 1.16(i))	minus 20 =	*	x =		OR	x =	
INDEPENDENT CLAIMS (37 CFR 1.16(h))	minus 3 =	*	x =			x =	
APPLICATION SIZE FEE (37 CFR 1.16(s))	If the specification and drawings exceed 100 sheets of paper, the application size fee due is $310 ($155 for small entity) for each additional 50 sheets or fraction thereof. See 35 U.S.C. 41(a)(1)(G) and 37 CFR 1.16(s).						
MULTIPLE DEPENDENT CLAIM PRESENT (37 CFR 1.16(j))			N/A			N/A	
* If the difference in column 1 is less than zero, enter "0" in column 2.			TOTAL			TOTAL	

APPLICATION AS AMENDED – PART II

AMENDMENTA

	(Column 1) CLAIMS REMAINING AFTER AMENDMENT		(Column 2) HIGHEST NUMBER PREVIOUSLY PAID FOR	(Column 3) PRESENT EXTRA	SMALL ENTITY RATE ($)	SMALL ENTITY ADDI-TIONAL FEE ($)	OR	OTHER THAN SMALL ENTITY RATE ($)	OTHER THAN SMALL ENTITY ADDI-TIONAL FEE ($)
Total (37 CFR 1.16(i))	* 21	Minus	** 21	= 0	x 40 =	0	OR	x =	
Independent (37 CFR 1.16(h))	* 6	Minus	*** 6	= 0	x 210 =	0	OR	x =	
Application Size Fee (37 CFR 1.16(s))									
FIRST PRESENTATION OF MULTIPLE DEPENDENT CLAIM (37 CFR 1.16(j))					N/A		OR	N/A	
					TOTAL ADD'L FEE	0	OR	TOTAL ADD'L FEE	

AMENDMENTB

	(Column 1) CLAIMS REMAINING AFTER AMENDMENT		(Column 2) HIGHEST NUMBER PREVIOUSLY PAID FOR	(Column 3) PRESENT EXTRA	RATE ($)	ADDI-TIONAL FEE ($)	OR	RATE ($)	ADDI-TIONAL FEE ($)
Total (37 CFR 1.16(i))	*	Minus	**	=	x =		OR	x =	
Independent (37 CFR 1.16(h))	*	Minus	***	=	x =		OR	x =	
Application Size Fee (37 CFR 1.16(s))									
FIRST PRESENTATION OF MULTIPLE DEPENDENT CLAIM (37 CFR 1.16(j))					N/A		OR	N/A	
					TOTAL ADD'L FEE	0	OR	TOTAL ADD'L FEE	

* If the entry in column 1 is less than the entry in column 2, write "0" in column 3.
** If the "Highest Number Previously Paid For" IN THIS SPACE is less than 20, enter "20".
*** If the "Highest Number Previously Paid For" IN THIS SPACE is less than 3, enter "3".
The "Highest Number Previously Paid For" (Total or Independent) is the highest number found in the appropriate box in column 1.

This collection of information is required by 37 CFR 1.16. The information is required to obtain or retain a benefit by the public which is to file (and by the USPTO to process) an application. Confidentiality is governed by 35 U.S.C. 122 and 37 CFR 1.14. This collection is estimated to take 12 minutes to complete, including gathering, preparing, and submitting the completed application form to the USPTO. Time will vary depending upon the individual case. Any comments on the amount of time you require to complete this form and/or suggestions for reducing this burden, should be sent to the Chief Information Officer, U.S. Patent and Trademark Office, U.S. Department of Commerce, P.O. Box 1450, Alexandria, VA 22313-1450. DO NOT SEND FEES OR COMPLETED FORMS TO THIS ADDRESS. **SEND TO: Commissioner for Patents, P.O. Box 1450, Alexandria, VA 22313-1450.**

If you need assistance in completing the form, call 1-800-PTO-9199 and select option 2.

Privacy Act Statement

The Privacy Act of 1974 (P.L. 93-579) requires that you be given certain information in connection with your submission of the attached form related to a patent application or patent. Accordingly, pursuant to the requirements of the Act, please be advised that: (1) the general authority for the collection of this information is 35 U.S.C. 2(b)(2); (2) furnishing of the information solicited is voluntary; and (3) the principal purpose for which the information is used by the U.S. Patent and Trademark Office is to process and/or examine your submission related to a patent application or patent. If you do not furnish the requested information, the U.S. Patent and Trademark Office may not be able to process and/or examine your submission, which may result in termination of proceedings or abandonment of the application or expiration of the patent.

The information provided by you in this form will be subject to the following routine uses:

1. The information on this form will be treated confidentially to the extent allowed under the Freedom of Information Act (5 U.S.C. 552) and the Privacy Act (5 U.S.C 552a). Records from this system of records may be disclosed to the Department of Justice to determine whether disclosure of these records is required by the Freedom of Information Act.
2. A record from this system of records may be disclosed, as a routine use, in the course of presenting evidence to a court, magistrate, or administrative tribunal, including disclosures to opposing counsel in the course of settlement negotiations.
3. A record in this system of records may be disclosed, as a routine use, to a Member of Congress submitting a request involving an individual, to whom the record pertains, when the individual has requested assistance from the Member with respect to the subject matter of the record.
4. A record in this system of records may be disclosed, as a routine use, to a contractor of the Agency having need for the information in order to perform a contract. Recipients of information shall be required to comply with the requirements of the Privacy Act of 1974, as amended, pursuant to 5 U.S.C. 552a(m).
5. A record related to an International Application filed under the Patent Cooperation Treaty in this system of records may be disclosed, as a routine use, to the International Bureau of the World Intellectual Property Organization, pursuant to the Patent Cooperation Treaty.
6. A record in this system of records may be disclosed, as a routine use, to another federal agency for purposes of National Security review (35 U.S.C. 181) and for review pursuant to the Atomic Energy Act (42 U.S.C. 218(c)).
7. A record from this system of records may be disclosed, as a routine use, to the Administrator, General Services, or his/her designee, during an inspection of records conducted by GSA as part of that agency's responsibility to recommend improvements in records management practices and programs, under authority of 44 U.S.C. 2904 and 2906. Such disclosure shall be made in accordance with the GSA regulations governing inspection of records for this purpose, and any other relevant (i.e., GSA or Commerce) directive. Such disclosure shall not be used to make determinations about individuals.
8. A record from this system of records may be disclosed, as a routine use, to the public after either publication of the application pursuant to 35 U.S.C. 122(b) or issuance of a patent pursuant to 35 U.S.C. 151. Further, a record may be disclosed, subject to the limitations of 37 CFR 1.14, as a routine use, to the public if the record was filed in an application which became abandoned or in which the proceedings were terminated and which application is referenced by either a published application, an application open to public inspection or an issued patent.
9. A record from this system of records may be disclosed, as a routine use, to a Federal, State, or local law enforcement agency, if the USPTO becomes aware of a violation or potential violation of law or regulation.

PTO/SB/08a (01-10)
Approved for use through 07/31/2012. OMB 0651-0031
U.S. Patent and Trademark Office; U.S. DEPARTMENT OF COMMERCE
Under the Paperwork Reduction Act of 1995, no persons are required to respond to a collection of information unless it contains a valid OMB control number.

INFORMATION DISCLOSURE STATEMENT BY APPLICANT (**Not for submission under 37 CFR 1.99)**	Application Number	12789538
	Filing Date	2010-05-28
	First Named Inventor	Robert Paul Morris
	Art Unit	244
	Examiner Name	James E Conaway
	Attorney Docket Number	0147-SP

U.S.PATENTS						Remove
Examiner Initial*	Cite No	Patent Number	Kind Code[1]	Issue Date	Name of Patentee or Applicant of cited Document	Pages,Columns,Lines where Relevant Passages or Relevant Figures Appear
	1					
If you wish to add additional U.S. Patent citation information please click the Add button.						Add
U.S.PATENT APPLICATION PUBLICATIONS						Remove
Examiner Initial*	Cite No	Publication Number	Kind Code[1]	Publication Date	Name of Patentee or Applicant of cited Document	Pages,Columns,Lines where Relevant Passages or Relevant Figures Appear
	1	20040148328	A1	2004-07-29	MATSUSHIMA	
	2	20080155016	A1	2008-06-26	TSAI	
	3	20060023652	A1	2006-02-02	VENDANTHAM	
	4	20110246553	A1	2011-10-06	Somani	
	5	20050060427	A1	2005-03-17	Phillips	
If you wish to add additional U.S. Published Application citation information please click the Add button.						Add
FOREIGN PATENT DOCUMENTS						Remove

INFORMATION DISCLOSURE STATEMENT BY APPLICANT (Not for submission under 37 CFR 1.99)	Application Number	12789538
	Filing Date	2010-05-28
	First Named Inventor	Robert Paul Morris
	Art Unit	244
	Examiner Name	James E Conaway
	Attorney Docket Number	0147-SP

Examiner Initial*	Cite No	Foreign Document Number[3]	Country Code[2] ¡	Kind Code[4]	Publication Date	Name of Patentee or Applicant of cited Document	Pages,Columns,Lines where Relevant Passages or Relevant Figures Appear	T[5]
	1							☐

If you wish to add additional Foreign Patent Document citation information please click the Add button Add

NON-PATENT LITERATURE DOCUMENTS Remove

Examiner Initials*	Cite No	Include name of the author (in CAPITAL LETTERS), title of the article (when appropriate), title of the item (book, magazine, journal, serial, symposium, catalog, etc), date, pages(s), volume-issue number(s), publisher, city and/or country where published.	T[5]
	1	Berners-Lee, T, "The Original HTTP as defined in 1991", 1991, W3C	☐
	2	Berners-Lee, T, "Basic HTTP as defined in 1992", 1992, W3C	☐
	3	Berners-Lee, T, et al.,"Hypertext Transfer Protocol -- HTTP/1.0", RFC 1945, May, 1996, IETF	☐
	4	Box, D, et al.,"Simple Object Access Protocol (SOAP) 1.1", W3C Note 2000-05-08, W3C	☐
	5	Gudgin, M, et al.,"SOAP Version 1.2 Part 1: Messaging Framework", 2nd Edition,, W3C Recommendation, 2007-04-27, W3C	☐
	6	Fielding, R, "Hypertext Transfer Protocol -- HTTP/1.1", RFC 2068, Janary, 1997, IETF	☐

If you wish to add additional non-patent literature document citation information please click the Add button Add

INFORMATION DISCLOSURE STATEMENT BY APPLICANT (Not for submission under 37 CFR 1.99)	Application Number	12789538
	Filing Date	2010-05-28
	First Named Inventor	Robert Paul Morris
	Art Unit	244
	Examiner Name	James E Conaway
	Attorney Docket Number	0147-SP

EXAMINER SIGNATURE			
Examiner Signature		Date Considered	

*EXAMINER: Initial if reference considered, whether or not citation is in conformance with MPEP 609. Draw line through a citation if not in conformance and not considered. Include copy of this form with next communication to applicant.

[1] See Kind Codes of USPTO Patent Documents at www.USPTO.GOV or MPEP 901.04. [2] Enter office that issued the document, by the two-letter code (WIPO Standard ST.3). [3] For Japanese patent documents, the indication of the year of the reign of the Emperor must precede the serial number of the patent document. [4] Kind of document by the appropriate symbols as indicated on the document under WIPO Standard ST.16 if possible. [5] Applicant is to place a check mark here if English language translation is attached.

INFORMATION DISCLOSURE STATEMENT BY APPLICANT (Not for submission under 37 CFR 1.99)	Application Number	12789538
	Filing Date	2010-05-28
	First Named Inventor	Robert Paul Morris
	Art Unit	244
	Examiner Name	James E Conaway
	Attorney Docket Number	0147-SP

CERTIFICATION STATEMENT

Please see 37 CFR 1.97 and 1.98 to make the appropriate selection(s):

☐ That each item of information contained in the information disclosure statement was first cited in any communication from a foreign patent office in a counterpart foreign application not more than three months prior to the filing of the information disclosure statement. See 37 CFR 1.97(e)(1).

OR

☐ That no item of information contained in the information disclosure statement was cited in a communication from a foreign patent office in a counterpart foreign application, and, to the knowledge of the person signing the certification after making reasonable inquiry, no item of information contained in the information disclosure statement was known to any individual designated in 37 CFR 1.56(c) more than three months prior to the filing of the information disclosure statement. See 37 CFR 1.97(e)(2).

☐ See attached certification statement.

☐ Fee set forth in 37 CFR 1.17 (p) has been submitted herewith.

☒ None

SIGNATURE

A signature of the applicant or representative is required in accordance with CFR 1.33, 10.18. Please see CFR 1.4(d) for the form of the signature.

Signature	/Robert Paul Morris/	Date (YYYY-MM-DD)	2013-05-25
Name/Print	Robert Paul Morris	Registration Number	

This collection of information is required by 37 CFR 1.97 and 1.98. The information is required to obtain or retain a benefit by the public which is to file (and by the USPTO to process) an application. Confidentiality is governed by 35 U.S.C. 122 and 37 CFR 1.14. This collection is estimated to take 1 hour to complete, including gathering, preparing and submitting the completed application form to the USPTO. Time will vary depending upon the individual case. Any comments on the amount of time you require to complete this form and/or suggestions for reducing this burden, should be sent to the Chief Information Officer, U.S. Patent and Trademark Office, U.S. Department of Commerce, P.O. Box 1450, Alexandria, VA 22313-1450. DO NOT SEND FEES OR COMPLETED FORMS TO THIS ADDRESS. **SEND TO: Commissioner for Patents, P.O. Box 1450, Alexandria, VA 22313-1450.**

Privacy Act Statement

The Privacy Act of 1974 (P.L. 93-579) requires that you be given certain information in connection with your submission of the attached form related to a patent application or patent. Accordingly, pursuant to the requirements of the Act, please be advised that: (1) the general authority for the collection of this information is 35 U.S.C. 2(b)(2); (2) furnishing of the information solicited is voluntary; and (3) the principal purpose for which the information is used by the U.S. Patent and Trademark Office is to process and/or examine your submission related to a patent application or patent. If you do not furnish the requested information, the U.S. Patent and Trademark Office may not be able to process and/or examine your submission, which may result in termination of proceedings or abandonment of the application or expiration of the patent.

The information provided by you in this form will be subject to the following routine uses:

1. The information on this form will be treated confidentially to the extent allowed under the Freedom of Information Act (5 U.S.C. 552) and the Privacy Act (5 U.S.C. 552a). Records from this system of records may be disclosed to the Department of Justice to determine whether the Freedom of Information Act requires disclosure of these record s.

2. A record from this system of records may be disclosed, as a routine use, in the course of presenting evidence to a court, magistrate, or administrative tribunal, including disclosures to opposing counsel in the course of settlement negotiations.

3. A record in this system of records may be disclosed, as a routine use, to a Member of Congress submitting a request involving an individual, to whom the record pertains, when the individual has requested assistance from the Member with respect to the subject matter of the record.

4. A record in this system of records may be disclosed, as a routine use, to a contractor of the Agency having need for the information in order to perform a contract. Recipients of information shall be required to comply with the requirements of the Privacy Act of 1974, as amended, pursuant to 5 U.S.C. 552a(m).

5. A record related to an International Application filed under the Patent Cooperation Treaty in this system of records may be disclosed, as a routine use, to the International Bureau of the World Intellectual Property Organization, pursuant to the Patent Cooperation Treaty.

6. A record in this system of records may be disclosed, as a routine use, to another federal agency for purposes of National Security review (35 U.S.C. 181) and for review pursuant to the Atomic Energy Act (42 U.S.C. 218(c)).

7. A record from this system of records may be disclosed, as a routine use, to the Administrator, General Services, or his/her designee, during an inspection of records conducted by GSA as part of that agency's responsibility to recommend improvements in records management practices and programs, under authority of 44 U.S.C. 2904 and 2906. Such disclosure shall be made in accordance with the GSA regulations governing inspection of records for this purpose, and any other relevant (i.e., GSA or Commerce) directive. Such disclosure shall not be used to make determinations about individuals.

8. A record from this system of records may be disclosed, as a routine use, to the public after either publication of the application pursuant to 35 U.S.C. 122(b) or issuance of a patent pursuant to 35 U.S.C. 151. Further, a record may be disclosed, subject to the limitations of 37 CFR 1.14, as a routine use, to the public if the record was filed in an application which became abandoned or in which the proceedings were terminated and which application is referenced by either a published application, an application open to public inspections or an issued patent.

9. A record from this system of records may be disclosed, as a routine use, to a Federal, State, or local law enforcement agency, if the USPTO becomes aware of a violation or potential violation of law or regulation.

PTO/SB/06 (09-11)
Approved for use through 1/31/2014. OMB 0651-0032
U.S. Patent and Trademark Office; U.S. DEPARTMENT OF COMMERCE
Under the Paperwork Reduction Act of 1995, no persons are required to respond to a collection of information unless it displays a valid OMB control number.

PATENT APPLICATION FEE DETERMINATION RECORD Substitute for Form PTO-875	Application or Docket Number 12/789,538	Filing Date 05/28/2010	☐ To be Mailed

ENTITY: ☐ LARGE ☒ SMALL ☐ MICRO

APPLICATION AS FILED – PART I

FOR	(Column 1) NUMBER FILED	(Column 2) NUMBER EXTRA	RATE ($)	FEE ($)
☐ BASIC FEE (37 CFR 1.16(a), (b), or (c))	N/A	N/A	N/A	
☐ SEARCH FEE (37 CFR 1.16(k), (i), or (m))	N/A	N/A	N/A	
☐ EXAMINATION FEE (37 CFR 1.16(o), (p), or (q))	N/A	N/A	N/A	
TOTAL CLAIMS (37 CFR 1.16(i))	minus 20 =	*	X $ =	
INDEPENDENT CLAIMS (37 CFR 1.16(h))	minus 3 =	*	X $ =	
☐ APPLICATION SIZE FEE (37 CFR 1.16(s))	If the specification and drawings exceed 100 sheets of paper, the application size fee due is $310 ($155 for small entity) for each additional 50 sheets or fraction thereof. See 35 U.S.C. 41(a)(1)(G) and 37 CFR 1.16(s).			
☐ MULTIPLE DEPENDENT CLAIM PRESENT (37 CFR 1.16(j))				
* If the difference in column 1 is less than zero, enter "0" in column 2.			TOTAL	

APPLICATION AS AMENDED – PART II

AMENDMENT 05/25/2013	(Column 1) CLAIMS REMAINING AFTER AMENDMENT		(Column 2) HIGHEST NUMBER PREVIOUSLY PAID FOR	(Column 3) PRESENT EXTRA	RATE ($)	ADDITIONAL FEE ($)
Total (37 CFR 1.16(i))	* 21	Minus	** 21	= 0	X $40 =	0
Independent (37 CFR 1.16(h))	* 6	Minus	***6	= 0	X $210 =	0
☐ Application Size Fee (37 CFR 1.16(s))						
☐ FIRST PRESENTATION OF MULTIPLE DEPENDENT CLAIM (37 CFR 1.16(j))						
					TOTAL ADD'L FEE	**0**

AMENDMENT	(Column 1) CLAIMS REMAINING AFTER AMENDMENT		(Column 2) HIGHEST NUMBER PREVIOUSLY PAID FOR	(Column 3) PRESENT EXTRA	RATE ($)	ADDITIONAL FEE ($)
Total (37 CFR 1.16(i))	*	Minus	**	=	X $ =	
Independent (37 CFR 1.16(h))	*	Minus	***	=	X $ =	
☐ Application Size Fee (37 CFR 1.16(s))						
☐ FIRST PRESENTATION OF MULTIPLE DEPENDENT CLAIM (37 CFR 1.16(j))						
					TOTAL ADD'L FEE	

* If the entry in column 1 is less than the entry in column 2, write "0" in column 3.
** If the "Highest Number Previously Paid For" IN THIS SPACE is less than 20, enter "20".
*** If the "Highest Number Previously Paid For" IN THIS SPACE is less than 3, enter "3".
The "Highest Number Previously Paid For" (Total or Independent) is the highest number found in the appropriate box in column 1.

LIE
/BURNELL L. ROSS/

This collection of information is required by 37 CFR 1.16. The information is required to obtain or retain a benefit by the public which is to file (and by the USPTO to process) an application. Confidentiality is governed by 35 U.S.C. 122 and 37 CFR 1.14. This collection is estimated to take 12 minutes to complete, including gathering, preparing, and submitting the completed application form to the USPTO. Time will vary depending upon the individual case. Any comments on the amount of time you require to complete this form and/or suggestions for reducing this burden, should be sent to the Chief Information Officer, U.S. Patent and Trademark Office, U.S. Department of Commerce, P.O. Box 1450, Alexandria, VA 22313-1450. DO NOT SEND FEES OR COMPLETED FORMS TO THIS ADDRESS. **SEND TO: Commissioner for Patents, P.O. Box 1450, Alexandria, VA 22313-1450.**
If you need assistance in completing the form, call 1-800-PTO-9199 and select option 2.

UNITED STATES PATENT AND TRADEMARK OFFICE

UNITED STATES DEPARTMENT OF COMMERCE
United States Patent and Trademark Office
Address: COMMISSIONER FOR PATENTS
P.O. Box 1450
Alexandria, Virginia 22313-1450
www.uspto.gov

APPLICATION NO.	FILING DATE	FIRST NAMED INVENTOR	ATTORNEY DOCKET NO.	CONFIRMATION NO.
12/789,538	05/28/2010	Robert Paul Morris	0147	8814

92924 7590 02/26/2013
Small Pond Associates, LLC
Robert Paul Morris
712 Latta Street
Raleigh, NC 27607

EXAMINER
CONAWAY, JAMES E

ART UNIT	PAPER NUMBER
2454	

NOTIFICATION DATE	DELIVERY MODE
02/26/2013	ELECTRONIC

Please find below and/or attached an Office communication concerning this application or proceeding.

The time period for reply, if any, is set in the attached communication.

Notice of the Office communication was sent electronically on above-indicated "Notification Date" to the following e-mail address(es):

paul.morris@nc.rr.com
rpmorris@yahoo.com

PTOL-90A (Rev. 04/07)

Office Action Summary	Application No.	Applicant(s)	
	12/789,538	MORRIS, ROBERT PAUL	
	Examiner	Art Unit	
	JAMES CONAWAY	2454	

-- The MAILING DATE of this communication appears on the cover sheet with the correspondence address --

Period for Reply

A SHORTENED STATUTORY PERIOD FOR REPLY IS SET TO EXPIRE 3 MONTH(S) OR THIRTY (30) DAYS, WHICHEVER IS LONGER, FROM THE MAILING DATE OF THIS COMMUNICATION.

- Extensions of time may be available under the provisions of 37 CFR 1.136(a). In no event, however, may a reply be timely filed after SIX (6) MONTHS from the mailing date of this communication.
- If NO period for reply is specified above, the maximum statutory period will apply and will expire SIX (6) MONTHS from the mailing date of this communication.
- Failure to reply within the set or extended period for reply will, by statute, cause the application to become ABANDONED (35 U.S.C. § 133). Any reply received by the Office later than three months after the mailing date of this communication, even if timely filed, may reduce any earned patent term adjustment. See 37 CFR 1.704(b).

Status

1)☒ Responsive to communication(s) filed on *28 May 2010*.

2a)☐ This action is **FINAL**. 2b)☒ This action is non-final.

3)☐ An election was made by the applicant in response to a restriction requirement set forth during the interview on _____; the restriction requirement and election have been incorporated into this action.

4)☐ Since this application is in condition for allowance except for formal matters, prosecution as to the merits is closed in accordance with the practice under *Ex parte Quayle*, 1935 C.D. 11, 453 O.G. 213.

Disposition of Claims

5)☒ Claim(s) *1-21* is/are pending in the application.

5a) Of the above claim(s) _____ is/are withdrawn from consideration.

6)☐ Claim(s) _____ is/are allowed.

7)☒ Claim(s) *1-21* is/are rejected.

8)☐ Claim(s) _____ is/are objected to.

9)☐ Claim(s) _____ are subject to restriction and/or election requirement.

* If any claims have been determined allowable, you may be eligible to benefit from the **Patent Prosecution Highway** program at a participating intellectual property office for the corresponding application. For more information, please see http://www.uspto.gov/patents/init_events/pph/index.jsp or send an inquiry to PPHfeedback@uspto.gov.

Application Papers

10)☐ The specification is objected to by the Examiner.

11)☐ The drawing(s) filed on _____ is/are: a)☐ accepted or b)☐ objected to by the Examiner.

Applicant may not request that any objection to the drawing(s) be held in abeyance. See 37 CFR 1.85(a).

Replacement drawing sheet(s) including the correction is required if the drawing(s) is objected to. See 37 CFR 1.121(d).

Priority under 35 U.S.C. § 119

12)☐ Acknowledgment is made of a claim for foreign priority under 35 U.S.C. § 119(a)-(d) or (f).

a)☐ All b)☐ Some * c)☐ None of:

1.☐ Certified copies of the priority documents have been received.

2.☐ Certified copies of the priority documents have been received in Application No. _____.

3.☐ Copies of the certified copies of the priority documents have been received in this National Stage application from the International Bureau (PCT Rule 17.2(a)).

* See the attached detailed Office action for a list of the certified copies not received.

Attachment(s)

1) ☒ Notice of References Cited (PTO-892)

2) ☒ Information Disclosure Statement(s) (PTO/SB/08) Paper No(s)/Mail Date *5/28/2010*.

3) ☐ Interview Summary (PTO-413) Paper No(s)/Mail Date. _____ .

4) ☐ Other: _____.

DETAILED ACTION

Claim Rejections - 35 USC § 101

1. 35 U.S.C. 101 reads as follows:

> Whoever invents or discovers any new and useful process, machine, manufacture, or composition of matter, or any new and useful improvement thereof, may obtain a patent therefor, subject to the conditions and requirements of this title.

2. Claims 18-21 are rejected under 35 U.S.C. § 101 as being directed to non-statutory subject matter.

3. Claims 18-19 recite a "system" comprising an "execution environment" and various "components" for performing software functions. While the claim loosely recites interaction with hardware, no hardware is explicitly claimed as part of the system. Accordingly, the claims are directed to software *per se*. See MPEP § 2106.01.

4. Claims 20-21 are directed to a "computer readable medium." According to its ordinary and customary meaning in the art, the phrase "computer readable medium" may be used to refer to media such as signals and carrier waves, which store information albeit temporarily. Accordingly, the claim is directed to non-statutory subject matter. See MPEP § 2106.01. This rejection may be overcome by amending the claims to recite a <u>non-transitory computer readable medium</u>.

Claim Rejections - 35 USC § 103

1. The following is a quotation of 35 U.S.C. 103(a) which forms the basis for all obviousness rejections set forth in this Office action:

> (a) A patent may not be obtained though the invention is not identically disclosed or described as set forth in section 102 of this title, if the differences between the subject matter sought to be patented and the prior art are such that the subject matter as a whole would have been obvious at the time the invention was made to a person having ordinary skill in the art to which said subject matter pertains. Patentability shall not be negatived by the manner in which the invention was made.

2. Claims 1-21 are rejected under 35 U.S.C. 103(a) as being unpatentable over Kleyzit et al. (US 2011/0066676), hereafter "Kleyzit," in view of Haverstock et al. (US 6,401,131), hereafter "Haverstock," and further in view of Matsushima (US 2004/0148328).

3. Regarding claim 1, Kleyzit teaches a method for processing an attached command response based on a markup element, the method comprising:

sending, via a network to a user agent node, a first resource (Kleyzit: 303 of FIG. 3) including a first markup element (Kleyzit: 304 of FIG. 3; par 0062);

receiving a first request message identifying a first command and receiving a second request message identifying a second command (Kleyzit: par 0064), wherein, based on the first markup element, at least one of the first request message includes first request information and the second request message includes second request information (Kleyzit: par 0064 [*The handler 202 creates one or several batch requests that include request information of multiple resources 114 of different types, which are embedded into the base page…*]);

determining at least one of that a first command response to the first command is a command response based on the first request information and that a second response message to the second request message is an response message based on the second request information (Kleyzit: 0069 [*The handler 201 combines header information and bodies of all individual responses into the batch response message*

body.], 0070).

Kleyzit does not teach:

an attach markup element, an attach command request, and an attachable command response; and

in response to the determination, sending, to the user agent node in the second response message, an attached command response including at least a portion of the first command response.

Haverstock teaches:

an attach markup element (Haverstock: col. 5 lines 20-30; col. 10 lines 44-55), an attach command request (Haverstock: col. 10 lines 50-55), and an attachable command response (Haverstock: col. 10 lines 50-55 [*…wherein selection of a link opens the one or more non-markup language object in the format and the one or more non-markup language objects are retrieved with the one or more first markup language objects…*]).

It would have been obvious to one of ordinary skill in the art at the time the invention was made to employ attachment markup elements of Haverstock in the Kleyzit system with predictable results. One would be motivated to make the combination in order to add attachment functionality to the Kleyzit system. It would have been readily apparent to one of ordinary skill that augmenting the Kleyzit system in this way would have been beneficial as it offers more functionality to the end user. One

would still further be motivated to make the competition due to the substantial similarity of the references. Both references disclose systems for delivering HTML content to an end user. Due to this substantial similarity, it would have been readily apparent to one of ordinary skill that the various beneficial features of the references may be combined and/or interchanged with predictable results and a synergistic effect.

Kleyzit-Haverstock does not teach:

in response to the determination, sending, to the user agent node in the second response message, an attached command response including at least a portion of the first command response.

Matsushima teaches a technique of:

in response to a determination, sending, to the user agent node in the second response message, a command response including at least a portion of the first command response (Matsushima: see FIG. 6 - HTTP response Y contains response to command B, which was in initial request).

It would have been obvious to one of ordinary skill in the art at the time the invention was made to employ the technique of Matsushima in the Kleyzit system with predictable results. One would be motivated to make the combination in order to add flexibility to the Kleyzit system, such that the system need not be constrained by responding to all commands at once. It would have been apparent to one of ordinary

skill in the art that it would improve efficiency of the system by allowing responses to be combined in this way. One would further be motivated to combine the references due to their similarity; both systems are for aggregating HTTP requests and responses. Due to this substantial similarity it would have been apparent to one of ordinary skill that the various beneficial features of the references may be combined and/or interchanged with predictable results and a synergistic effect.

4. Regarding claim 2, the method of claim 1 wherein receiving the first request message includes receiving the first request message including the first attach-request information and including first command information identifying the first command, wherein the first attach-request information is based on the first attach markup element and the first command information is based on the first resource (Haverstock: col. 5 lines 20-30; col. 10 lines 44-55; Kleyzit: par 0064 [*The handler 202 creates one or several batch requests that include request information of multiple resources 114 of different types, which are embedded into the base page…*]).

5. Regarding claim 3, the method of claim 2 wherein determining that the first command response is an attachable command response includes determining that the first command response is attachable in response to receiving the first attach-request information (Haverstock: col. 5 lines 20-30; col. 10 lines 44-55).

6. Regarding claim 4, the method of claim 3 wherein determining that the second response message is attachable includes determining that the second response message is attachable based on determining the first command response is attachable (Haverstock: col. 5 lines 20-30; col. 10 lines 44-55).

7. Regarding claim 5, the method of claim 4 wherein determining that the second response message is attachable comprises:

sending, to the user agent node, a second resource including a second attach markup element (Kleyzit: par 0064 [*The handler 202 creates one or several batch requests that include request information of multiple resources 114 of different types, which are embedded into the base page…*]);

receiving the second request message including second command information based on the second resource and including the second attach-request information based on the second attach markup element (Kleyzit: par 0064 [*The handler 202 creates one or several batch requests that include request information of multiple resources 114 of different types, which are embedded into the base page…*]); and

determining that the second response message is attachable based on the second attach-request information (Haverstock: col. 5 lines 20-30; col. 10 lines 44-55).

8. Regarding claim 6, the method of claim 1 wherein receiving the second request message includes receiving the second request message including the second request information and second command information identifying the second command (Kleyzit:

par 0064),

wherein the second request information is based on the first attach markup element and the second command information is based on the first resource (Matsushima: see FIG. 6 - HTTP response Y contains response to command B, which was in initial request).

9. Regarding claim 7, the method of claim 6 wherein determining that the second response message is an attachable response message includes determining that the second response message is attachable in response to receiving the second attach-request information in the second request message (Haverstock: col. 10 lines 50-55 [*…wherein selection of a link opens the one or more non-markup language object in the format and the one or more non-markup language objects are retrieved with the one or more first markup language objects…*]).

10. Regarding claim 8, the method of claim 7 wherein determining that the first command response is attachable includes determining that the first command response is attachable based on determining that the second response message is attachable (Matsushima: see FIG. 6 - HTTP response Y contains response to command B, which was in initial request).

11. Regarding claim 9, the method of claim 8 wherein determining that the first command response is attachable comprises:

sending, to the user agent node, a second resource including a second attach markup element (Kleyzit: par 0064 [*The handler 202 creates one or several batch requests that include request information of multiple resources 114 of different types, which are embedded into the base page…*]);

receiving the first request message including first command information based on the second resource and including the first attach-request information based on the second attach markup element (Kleyzit: par 0064 [*The handler 202 creates one or several batch requests that include request information of multiple resources 114 of different types, which are embedded into the base page…*]); and

determining that the first command response is attachable based on the first attach markup information (Haverstock: col. 5 lines 20-30; col. 10 lines 44-55).

12. Regarding claim 10, the method of claim 1 further comprises:

determining that a second attach-condition is met based on the second attach-request information (Haverstock: col. 10 lines 45-55); and

in response to determining that the second attach-request condition is met, at least one of performing the first command and generating the attached command response (Haverstock: col. 10 lines 50-55 [*…wherein selection of a link opens the one or more non-markup language object in the format and the one or more non-markup language objects are retrieved with the one or more first markup language objects…*]).

13. Regarding claim 11, the method of claim 1 further include sending to the user agent node a first response message to the first request message including at most the portion of the first command response (Kleyzit: 0069 [*The handler 201 combines header information and bodies of all individual responses into the batch response message body.*], 0070), in response to determining that the first command response is attachable (Haverstock: col. 5 lines 20-30; col. 10 lines 44-55).

14. Regarding claim 12, a method for processing an attached command response based on a markup element, the method comprising:

receiving, via a network from a server node, a first resource (Kleyzit: 303 of FIG. 3) including a first attach markup element (Haverstock: col. 5 lines 20-30; col. 10 lines 44-55);

sending a first request message identifying a first command and sending a second request message identifying a second command (Kleyzit: par 0064), wherein, based on the first attach markup element, at least one the first request message includes first attach-request information and the second request message includes second attach-request information (Kleyzit: par 0064 [*The handler 202 creates one or several batch requests that include request information of multiple resources 114 of different types, which are embedded into the base page…*]); and

in response to sending at least one of the first attach-request information and the second attach-request information, receiving, in a second response message to the second request message, an attached command response including at least a portion

of a first command response for the first command (Matsushima: see FIG. 6 - HTTP response Y contains response to command B, which was in initial request).

15. Regarding claim 13, the method of claim 12 wherein sending the first request message includes sending the first request message including the first attach-request information and including first command information identifying the first command, wherein the first attach-request information is based on the first attach markup element and the first command information is based on the first resource (Haverstock: col. 5 lines 20-30; col. 10 lines 44-55; Kleyzit: par 0064 [*The handler 202 creates one or several batch requests that include request information of multiple resources 114 of different types, which are embedded into the base page…*]).

16. Regarding claim 14, the method of claim 13 wherein sending the second request message comprises:

receiving a second resource (Kleyzit: 303 of FIG. 3) including a second attach markup element (Haverstock: col. 5 lines 20-30; col. 10 lines 44-55); and

sending the second request message including second command information based on the second resource and including the second attach-request information based on the second attach markup element to indicate that the second response message is attachable based on the second attach-request information (Haverstock: col. 5 lines 20-30; col. 10 lines 44-55).

17. Regarding claim 15, the method of claim 12 wherein sending the second request message includes sending the second request message including the second attach request information and including second command information identifying the second command (Haverstock: col. 5 lines 20-30; col. 10 lines 44-55; Kleyzit: par 0064 [*The handler 202 creates one or several batch requests that include request information of multiple resources 114 of different types, which are embedded into the base page…*]),

wherein the second attach-request information is based on the first attach markup element and the second command information is based on the first resource (Matsushima: see FIG. 6 - HTTP response Y contains response to command B, which was in initial request).

18. Regarding claim 16, the method of claim 15 wherein sending the first request message comprises:

receiving a second resource (Kleyzit: 303 of FIG. 3) including a second attach markup element (Haverstock: col. 5 lines 20-30; col. 10 lines 44-55);

sending the first request message including first command information, based on the second resource, and including the first attach-request information, based on the second attach markup element, indicating that the first command response is attachable based on the first attach-request information (Haverstock: col. 5 lines 20-30; col. 10 lines 44-55).

19. Regarding claim 17, the method of claim 12 further includes receiving from the server node a first response message to the first request message including at most the portion of the first command response (Kleyzit: 0069 [*The handler 201 combines header information and bodies of all individual responses into the batch response message body.*], 0070), in response to sending the first request message identifying the first command determined to be attachable by the server node (Haverstock: col. 5 lines 20-30; col. 10 lines 44-55).

20. Regarding claim 18, a system for processing an attached command response based on a markup element, the system comprising:

an execution environment including an instruction-processing unit (Kleyzit: 103 of FIG. 2A) configured to process an instruction included in at least one of a resource generator component (Kleyzit: 104 of FIG. 2A), a request-in component (Kleyzit: 104 of FIG. 2A), an attach director component (Haverstock: col. 5 lines 20-30; col. 10 lines 44-55), and a response-out component (Kleyzit: 104 of FIG. 2A);

the resource generator component configured for sending, via a network to a user agent node, a first resource (Kleyzit: 303 of FIG. 3) including a first attach markup element (Haverstock: col. 5 lines 20-30; col. 10 lines 44-55);

the request-in component configured for receiving a first request message identifying a first command and receiving a second request message identifying a second command (Kleyzit: par 0064 [*The handler 202 creates one or several batch requests that include request information of multiple resources 114 of different types,*

which are embedded into the base page…]),

wherein, based on the first attach markup element, at least one of the first request message includes first attach-request information and the second request message includes second attach-request information (Haverstock: col. 5 lines 20-30; col. 10 lines 44-55);

the attach director component configured for determining at least one of that a first command response to the first command is an attachable command response based on the first attach-request information and that a second response message to the second request message is an attachable response message based on the second attach-request information (Haverstock: col. 5 lines 20-30; col. 10 lines 44-55); and

the response-out component configured for, in response to the determination, sending, to the user agent node in the second response message, an attached command response including at least a portion of the first command response (Matsushima: see FIG. 6 - HTTP response Y contains response to command B, which was in initial request).

21. Regarding claim 19, a system for processing an attached command response based on a markup element, the system comprising:

an execution environment including an instruction-processing unit (Kleyzit: 101 of FIG. 2A) configured to process an instruction included in at least one of a markup content handler component (Kleyzit: 108 of FIG. 2A), a request-out component (Kleyzit: 108 of FIG. 2A), and an attached response component (Kleyzit: 108 of FIG. 2A);

the markup content handler component configured for receiving, via a network from a server node, a first resource (Kleyzit: 303 of FIG. 3) including a first attach markup element (Haverstock: col. 5 lines 20-30; col. 10 lines 44-55);

the request-out component configured for sending a first request message identifying a first command and sending a second request message identifying a second command (Kleyzit: par 0064 [*The handler 202 creates one or several batch requests that include request information of multiple resources 114 of different types, which are embedded into the base page…*]),

wherein, based on the first attach markup element, at least one the first request message includes first attach-request information and the second request message includes second attach-request information (Haverstock: col. 5 lines 20-30; col. 10 lines 44-55); and

the attached response component configured for, in response to sending at least one of the first attach-request information and the second attach-request information, receiving, in a second response message to the second request message, an attached command response including at least a portion of a first command response for the first command (Matsushima: see FIG. 6 - HTTP response Y contains response to command B, which was in initial request).

22. Regarding claim 20, a computer readable medium (Kleyzit: 101 of FIG. 2A) embodying a computer program, executable by a machine, for processing an attached command response based on a markup element, the computer program comprising

executable instructions for:

sending, via a network to a user agent node, a first resource (Kleyzit: 303 of FIG. 3) including a first attach markup element (Haverstock: col. 5 lines 20-30; col. 10 lines 44-55);

receiving a first request message identifying a first command and receiving a second request message identifying a second command (Kleyzit: par 0064 [*The handler 202 creates one or several batch requests that include request information of multiple resources 114 of different types, which are embedded into the base page…*]),

wherein, based on the first attach markup element, at least one of the first request message includes first attach-request information and the second request message includes second attach-request information (Haverstock: col. 5 lines 20-30; col. 10 lines 44-55);

determining at least one of that a first command response to the first command is an attachable command response based on the first attach-request information and that a second response message to the second request message is an attachable response message based on the second attach-request information (Haverstock: col. 5 lines 20-30; col. 10 lines 44-55); and

in response to the determination, sending, to the user agent node in the second response message, an attached command response including at least a portion of the first command response (Matsushima: see FIG. 6 - HTTP response Y contains response to command B, which was in initial request).

23. Regarding claim 21, a computer readable medium (Kleyzit: 103 of FIG. 2A) embodying a computer program, executable by a machine, for processing an attached command response based on a markup element, the computer program comprising executable instructions for:

receiving, via a network from a server node, a first resource (Kleyzit: 303 of FIG. 3) including a first attach markup element (Haverstock: col. 5 lines 20-30; col. 10 lines 44-55);

sending a first request message identifying a first command and sending a second request message identifying a second command (Kleyzit: par 0064 [*The handler 202 creates one or several batch requests that include request information of multiple resources 114 of different types, which are embedded into the base page…*]),

wherein, based on the first attach markup element, at least one the first request message includes first attach- request information and the second request message includes second attach-request information (Haverstock: col. 5 lines 20-30; col. 10 lines 44-55);

in response to sending at least one of the first attach-request information and the second attach-request information (Haverstock: col. 5 lines 20-30; col. 10 lines 44-55), receiving, in a second response message to the second request message, an attached command response including at least a portion of a first command response for the first command (Matsushima: see FIG. 6 - HTTP response Y contains response to command B, which was in initial request).

Conclusion

Any inquiry concerning this communication or earlier communications from the examiner should be directed to JAMES CONAWAY whose telephone number is (571)270-5640. The examiner can normally be reached on Monday - Friday 8:30-5:00.

If attempts to reach the examiner by telephone are unsuccessful, the examiner's supervisor, JOSEPH AVELLINO can be reached on 571-272-3905. The fax phone number for the organization where this application or proceeding is assigned is 571-273-8300.

Information regarding the status of an application may be obtained from the Patent Application Information Retrieval (PAIR) system. Status information for published applications may be obtained from either Private PAIR or Public PAIR. Status information for unpublished applications is available through Private PAIR only. For more information about the PAIR system, see http://pair-direct.uspto.gov. Should you have questions on access to the Private PAIR system, contact the Electronic Business Center (EBC) at 866-217-9197 (toll-free). If you would like assistance from a USPTO Customer Service Representative or access to the automated information system, call 800-786-9199 (IN USA OR CANADA) or 571-272-1000.

/J. C./
Examiner, Art Unit 2454

/Joseph E. Avellino/
Supervisory Patent Examiner, Art Unit 2454

Notice of References Cited	Application/Control No. 12/789,538	Applicant(s)/Patent Under Reexamination MORRIS, ROBERT PAUL	
	Examiner JAMES CONAWAY	Art Unit 2454	Page 1 of 1

U.S. PATENT DOCUMENTS

*		Document Number Country Code-Number-Kind Code	Date MM-YYYY	Name	Classification
*	A	US-2004/0148328 A1	07-2004	Matsushima, Hiroyuki	709/200
*	B	US-2008/0155016 A1	06-2008	TSAI, WEI K.	709/203
*	C	US-2011/0066676 A1	03-2011	Kleyzit et al.	709/203
*	D	US-8,346,853 B2	01-2013	Morris, Robert Paul	709/203
	E	US-			
	F	US-			
	G	US-			
	H	US-			
	I	US-			
	J	US-			
	K	US-			
	L	US-			
	M	US-			

FOREIGN PATENT DOCUMENTS

*		Document Number Country Code-Number-Kind Code	Date MM-YYYY	Country	Name	Classification
	N					
	O					
	P					
	Q					
	R					
	S					
	T					

NON-PATENT DOCUMENTS

*		Include as applicable: Author, Title Date, Publisher, Edition or Volume, Pertinent Pages)
	U	Barton et al., SOAP Messages with Attachments, 12/11/2000
	V	
	W	
	X	

*A copy of this reference is not being furnished with this Office action. (See MPEP § 707.05(a).)
Dates in MM-YYYY format are publication dates. Classifications may be US or foreign.

Search Notes	Application/Control No.	Applicant(s)/Patent Under Reexamination
	12789538	MORRIS, ROBERT PAUL
	Examiner	**Art Unit**
	JAMES CONAWAY	2454

CPC- SEARCHED

Symbol	Date	Examiner

CPC COMBINATION SETS - SEARCHED

Symbol	Date	Examiner

US CLASSIFICATION SEARCHED

Class	Subclass	Date	Examiner
709	203	2/13/2013	JC

SEARCH NOTES

Search Notes	Date	Examiner
EAST Inventor & Assignee Search	2/13/2013	JC
EAST class-limited search	2/13/2013	JC
EAST text-based search	2/13/2013	JC

INTERFERENCE SEARCH

US Class/ CPC Symbol	US Subclass / CPC Group	Date	Examiner

PTO/SB/08a (01-10)
Approved for use through 07/31/2012. OMB 0651-0031
U.S. Patent and Trademark Office; U.S. DEPARTMENT OF COMMERCE
Under the Paperwork Reduction Act of 1995, no persons are required to respond to a collection of information unless it contains a valid OMB control number.

INFORMATION DISCLOSURE STATEMENT BY APPLICANT (**Not for submission under 37 CFR 1.99)**		
	Application Number	
	Filing Date	2010-05-28
	First Named Inventor	Robert Paul Morris
	Art Unit	
	Examiner Name	
	Attorney Docket Number	0147

U.S.PATENTS						Remove
Examiner Initial*	Cite No	Patent Number	Kind Code[1]	Issue Date	Name of Patentee or Applicant of cited Document	Pages,Columns,Lines where Relevant Passages or Relevant Figures Appear
	1	7587450	B2	2009-09-08	Morris	
If you wish to add additional U.S. Patent citation information please click the Add button.						Add

U.S.PATENT APPLICATION PUBLICATIONS						Remove
Examiner Initial*	Cite No	Publication Number	Kind Code[1]	Publication Date	Name of Patentee or Applicant of cited Document	Pages,Columns,Lines where Relevant Passages or Relevant Figures Appear
	1	20070150814	A1	2007-06-28	Morris	
	2	20090254627	A1	2009-10-08	Morris	
	3	20090144753	A1	2009-01-04	Morris	
	4	20080077653	A1	2008-03-27	Morris	
	5	20070005725	A1	2007-01-04	Morris	
If you wish to add additional U.S. Published Application citation information please click the Add button.						Add

FOREIGN PATENT DOCUMENTS	Remove

ALL REFERENCES CONSIDERED EXCEPT WHERE LINED THROUGH. /J.C./

INFORMATION DISCLOSURE STATEMENT BY APPLICANT (Not for submission under 37 CFR 1.99)	Application Number	12789538 - GAU: 2454
	Filing Date	2010-05-28
	First Named Inventor	Robert Paul Morris
	Art Unit	
	Examiner Name	
	Attorney Docket Number	0147

Examiner Initial*	Cite No	Foreign Document Number[3]	Country Code[2] ¡	Kind Code[4]	Publication Date	Name of Patentee or Applicant of cited Document	Pages,Columns,Lines where Relevant Passages or Relevant Figures Appear	T[5]
	1							☐

If you wish to add additional Foreign Patent Document citation information please click the Add button Add

NON-PATENT LITERATURE DOCUMENTS Remove

Examiner Initials*	Cite No	Include name of the author (in CAPITAL LETTERS), title of the article (when appropriate), title of the item (book, magazine, journal, serial, symposium, catalog, etc), date, pages(s), volume-issue number(s), publisher, city and/or country where published.	T[5]
	1	NIELSON, H. FRYSTYK, et al, "HTTP-NG Overview", Internet Draft, 2009-11-17, IETF	☐
	2	FIELDING, R, et al, "Hypertext Transfer Protocol -- HTTP/1.1", RFC 2616, 1999-06, IETF	☐
	3	GETTYS, JIM, et al, "The WebMUX Protocol", draft-gettys-webmux-00.txt, 1998-08-01, IETF	☐
	4	UNKNOWN, "The Internet Needs a Session Layer", http://fanf.livejournal.com/53662.html, 2006-03-17	☐
	5	HICKSON, IAN, editor, "HTML5", Draft Standard, 2009-10-03, Web Hypertext Application Technology Working Group	☐

If you wish to add additional non-patent literature document citation information please click the Add button Add

EXAMINER SIGNATURE

Examiner Signature	/James Conaway/	Date Considered	02/14/2013

*EXAMINER: Initial if reference considered, whether or not citation is in conformance with MPEP 609. Draw line through a citation if not in conformance and not considered. Include copy of this form with next communication to applicant.

EFS Web 2.1.17 ALL REFERENCES CONSIDERED EXCEPT WHERE LINED THROUGH. /J.C./

INFORMATION DISCLOSURE STATEMENT BY APPLICANT (Not for submission under 37 CFR 1.99)	Application Number	12789538 - GAU: 2454
	Filing Date	2010-05-28
	First Named Inventor	Robert Paul Morris
	Art Unit	
	Examiner Name	
	Attorney Docket Number	0147

[1] See Kind Codes of USPTO Patent Documents at www.USPTO.GOV or MPEP 901.04. [2] Enter office that issued the document, by the two-letter code (WIPO Standard ST.3). [3] For Japanese patent documents, the indication of the year of the reign of the Emperor must precede the serial number of the patent document. [4] Kind of document by the appropriate symbols as indicated on the document under WIPO Standard ST.16 if possible. [5] Applicant is to place a check mark here if English language translation is attached.

ALL REFERENCES CONSIDERED EXCEPT WHERE LINED THROUGH. /J.C./

UNITED STATES PATENT AND TRADEMARK OFFICE

UNITED STATES DEPARTMENT OF COMMERCE
United States Patent and Trademark Office
Address: COMMISSIONER FOR PATENTS
P.O. Box 1450
Alexandria, Virginia 22313-1450
www.uspto.gov

BIB DATA SHEET

CONFIRMATION NO. 8814

SERIAL NUMBER	FILING or 371(c) DATE	CLASS	GROUP ART UNIT	ATTORNEY DOCKET NO.
12/789,538	05/28/2010 **RULE**	709	2454	0147

APPLICANTS
Robert Paul Morris, Raleigh, NC;

**** CONTINUING DATA ***************************

**** FOREIGN APPLICATIONS ***************************

**** IF REQUIRED, FOREIGN FILING LICENSE GRANTED **** ** SMALL ENTITY **
06/08/2010

Foreign Priority claimed ☐ Yes ☑ No 35 USC 119(a-d) conditions met ☐ Yes ☑ No Verified and Acknowledged /JAMES E CONAWAY/ Examiner's Signature	☐ Met after Allowance Initials	STATE OR COUNTRY NC	SHEETS DRAWINGS 15	TOTAL CLAIMS 21	INDEPENDENT CLAIMS 6

ADDRESS

Small Pond Associates, LLC
Robert Paul Morris
712 Latta Street
Raleigh, NC 27607
UNITED STATES

TITLE

METHODS, SYSTEMS, AND COMPUTER PROGRAM PRODUCTS FOR PROCESSING AN ATTACHED COMMAND RESPONSE BASED ON A MARKUP ELEMENT

FILING FEE RECEIVED 818	FEES: Authority has been given in Paper No._____ to charge/credit DEPOSIT ACCOUNT No._____ for following:	☐ All Fees ☐ 1.16 Fees (Filing) ☐ 1.17 Fees (Processing Ext. of time) ☐ 1.18 Fees (Issue) ☐ Other _____ ☐ Credit

Index of Claims	Application/Control No.	Applicant(s)/Patent Under Reexamination
	12789538	MORRIS, ROBERT PAUL
	Examiner	**Art Unit**
	JAMES CONAWAY	2454

✓	Rejected	-	Cancelled	N	Non-Elected	A	Appeal
=	Allowed	÷	Restricted	I	Interference	O	Objected

☐ Claims renumbered in the same order as presented by applicant ☐ CPA ☐ T.D. ☐ R.1.47

CLAIM		DATE								
Final	Original	02/13/2013								
	1	✓								
	2	✓								
	3	✓								
	4	✓								
	5	✓								
	6	✓								
	7	✓								
	8	✓								
	9	✓								
	10	✓								
	11	✓								
	12	✓								
	13	✓								
	14	✓								
	15	✓								
	16	✓								
	17	✓								
	18	✓								
	19	✓								
	20	✓								
	21	✓								

UNITED STATES PATENT AND TRADEMARK OFFICE

UNITED STATES DEPARTMENT OF COMMERCE
United States Patent and Trademark Office
Address: COMMISSIONER FOR PATENTS
P.O. Box 1450
Alexandria, Virginia 22313-1450
www.uspto.gov

APPLICATION NUMBER	FILING OR 371(C) DATE	FIRST NAMED APPLICANT	ATTY. DOCKET NO./TITLE
12/789,538	05/28/2010	Robert Paul Morris	0147

CONFIRMATION NO. 8814

92924
Robert Paul Morris
712 Latta Street
Raleigh, NC 27607

PUBLICATION NOTICE

OC000000051242462

Title:METHODS, SYSTEMS, AND COMPUTER PROGRAM PRODUCTS FOR PROCESSING AN ATTACHED COMMAND RESPONSE BASED ON A MARKUP ELEMENT

Publication No.US-2011-0295932-A1
Publication Date:12/01/2011

NOTICE OF PUBLICATION OF APPLICATION

The above-identified application will be electronically published as a patent application publication pursuant to 37 CFR 1.211, et seq. The patent application publication number and publication date are set forth above.

The publication may be accessed through the USPTO's publically available Searchable Databases via the Internet at www.uspto.gov. The direct link to access the publication is currently http://www.uspto.gov/patft/.

The publication process established by the Office does not provide for mailing a copy of the publication to applicant. A copy of the publication may be obtained from the Office upon payment of the appropriate fee set forth in 37 CFR 1.19(a)(1). Orders for copies of patent application publications are handled by the USPTO's Office of Public Records. The Office of Public Records can be reached by telephone at (703) 308-9726 or (800) 972-6382, by facsimile at (703) 305-8759, by mail addressed to the United States Patent and Trademark Office, Office of Public Records, Alexandria, VA 22313-1450 or via the Internet.

In addition, information on the status of the application, including the mailing date of Office actions and the dates of receipt of correspondence filed in the Office, may also be accessed via the Internet through the Patent Electronic Business Center at www.uspto.gov using the public side of the Patent Application Information and Retrieval (PAIR) system. The direct link to access this status information is currently http://pair.uspto.gov/. Prior to publication, such status information is confidential and may only be obtained by applicant using the private side of PAIR.

Further assistance in electronically accessing the publication, or about PAIR, is available by calling the Patent Electronic Business Center at 1-866-217-9197.

Office of Data Managment, Application Assistance Unit (571) 272-4000, or (571) 272-4200, or 1-888-786-0101

UNITED STATES PATENT AND TRADEMARK OFFICE

UNITED STATES DEPARTMENT OF COMMERCE
United States Patent and Trademark Office
Address: COMMISSIONER FOR PATENTS
P.O. Box 1450
Alexandria, Virginia 22313-1450
www.uspto.gov

APPLICATION NUMBER	FILING or 371(c) DATE	GRP ART UNIT	FIL FEE REC'D	ATTY.DOCKET.NO	TOT CLAIMS	IND CLAIMS
12/789,538	05/28/2010	2447	818	0147	21	6

CONFIRMATION NO. 8814

92924
Robert Paul Morris
712 Latta Street
Raleigh, NC 27607

FILING RECEIPT

OC000000042002403

Date Mailed: 06/14/2010

Receipt is acknowledged of this non-provisional patent application. The application will be taken up for examination in due course. Applicant will be notified as to the results of the examination. Any correspondence concerning the application must include the following identification information: the U.S. APPLICATION NUMBER, FILING DATE, NAME OF APPLICANT, and TITLE OF INVENTION. Fees transmitted by check or draft are subject to collection. Please verify the accuracy of the data presented on this receipt. **If an error is noted on this Filing Receipt, please submit a written request for a Filing Receipt Correction. Please provide a copy of this Filing Receipt with the changes noted thereon. If you received a "Notice to File Missing Parts" for this application, please submit any corrections to this Filing Receipt with your reply to the Notice. When the USPTO processes the reply to the Notice, the USPTO will generate another Filing Receipt incorporating the requested corrections**

Applicant(s)

Robert Paul Morris, Raleigh, NC;

Power of Attorney: None

Domestic Priority data as claimed by applicant

Foreign Applications

If Required, Foreign Filing License Granted: 06/08/2010

The country code and number of your priority application, to be used for filing abroad under the Paris Convention, is **US 12/789,538**

Projected Publication Date: 12/01/2011

Non-Publication Request: No

Early Publication Request: No
**** SMALL ENTITY ****

Title

METHODS, SYSTEMS, AND COMPUTER PROGRAM PRODUCTS FOR PROCESSING AN ATTACHED COMMAND RESPONSE BASED ON A MARKUP ELEMENT

Preliminary Class

709

PROTECTING YOUR INVENTION OUTSIDE THE UNITED STATES

Since the rights granted by a U.S. patent extend only throughout the territory of the United States and have no effect in a foreign country, an inventor who wishes patent protection in another country must apply for a patent in a specific country or in regional patent offices. Applicants may wish to consider the filing of an international application under the Patent Cooperation Treaty (PCT). An international (PCT) application generally has the same effect as a regular national patent application in each PCT-member country. The PCT process **simplifies** the filing of patent applications on the same invention in member countries, but **does not result** in a grant of "an international patent" and does not eliminate the need of applicants to file additional documents and fees in countries where patent protection is desired.

Almost every country has its own patent law, and a person desiring a patent in a particular country must make an application for patent in that country in accordance with its particular laws. Since the laws of many countries differ in various respects from the patent law of the United States, applicants are advised to seek guidance from specific foreign countries to ensure that patent rights are not lost prematurely.

Applicants also are advised that in the case of inventions made in the United States, the Director of the USPTO must issue a license before applicants can apply for a patent in a foreign country. The filing of a U.S. patent application serves as a request for a foreign filing license. The application's filing receipt contains further information and guidance as to the status of applicant's license for foreign filing.

Applicants may wish to consult the USPTO booklet, "General Information Concerning Patents" (specifically, the section entitled "Treaties and Foreign Patents") for more information on timeframes and deadlines for filing foreign patent applications. The guide is available either by contacting the USPTO Contact Center at 800-786-9199, or it can be viewed on the USPTO website at http://www.uspto.gov/web/offices/pac/doc/general/index.html.

For information on preventing theft of your intellectual property (patents, trademarks and copyrights), you may wish to consult the U.S. Government website, http://www.stopfakes.gov. Part of a Department of Commerce initiative, this website includes self-help "toolkits" giving innovators guidance on how to protect intellectual property in specific countries such as China, Korea and Mexico. For questions regarding patent enforcement issues, applicants may call the U.S. Government hotline at 1-866-999-HALT (1-866-999-4158).

LICENSE FOR FOREIGN FILING UNDER

Title 35, United States Code, Section 184

Title 37, Code of Federal Regulations, 5.11 & 5.15

GRANTED

The applicant has been granted a license under 35 U.S.C. 184, if the phrase "IF REQUIRED, FOREIGN FILING LICENSE GRANTED" followed by a date appears on this form. Such licenses are issued in all applications where

the conditions for issuance of a license have been met, regardless of whether or not a license may be required as set forth in 37 CFR 5.15. The scope and limitations of this license are set forth in 37 CFR 5.15(a) unless an earlier license has been issued under 37 CFR 5.15(b). The license is subject to revocation upon written notification. The date indicated is the effective date of the license, unless an earlier license of similar scope has been granted under 37 CFR 5.13 or 5.14.

This license is to be retained by the licensee and may be used at any time on or after the effective date thereof unless it is revoked. This license is automatically transferred to any related applications(s) filed under 37 CFR 1.53(d). This license is not retroactive.

The grant of a license does not in any way lessen the responsibility of a licensee for the security of the subject matter as imposed by any Government contract or the provisions of existing laws relating to espionage and the national security or the export of technical data. Licensees should apprise themselves of current regulations especially with respect to certain countries, of other agencies, particularly the Office of Defense Trade Controls, Department of State (with respect to Arms, Munitions and Implements of War (22 CFR 121-128)); the Bureau of Industry and Security, Department of Commerce (15 CFR parts 730-774); the Office of Foreign AssetsControl, Department of Treasury (31 CFR Parts 500+) and the Department of Energy.

NOT GRANTED

No license under 35 U.S.C. 184 has been granted at this time, if the phrase "IF REQUIRED, FOREIGN FILING LICENSE GRANTED" DOES NOT appear on this form. Applicant may still petition for a license under 37 CFR 5.12, if a license is desired before the expiration of 6 months from the filing date of the application. If 6 months has lapsed from the filing date of this application and the licensee has not received any indication of a secrecy order under 35 U.S.C. 181, the licensee may foreign file the application pursuant to 37 CFR 5.15(b).

PTO/SB/08a (01-10)
Approved for use through 07/31/2012. OMB 0651-0031
U.S. Patent and Trademark Office; U.S. DEPARTMENT OF COMMERCE
Under the Paperwork Reduction Act of 1995, no persons are required to respond to a collection of information unless it contains a valid OMB control number.

INFORMATION DISCLOSURE STATEMENT BY APPLICANT (**Not for submission under 37 CFR 1.99)**	Application Number	
	Filing Date	2010-05-28
	First Named Inventor	Robert Paul Morris
	Art Unit	
	Examiner Name	
	Attorney Docket Number	0147

U.S.PATENTS						Remove
Examiner Initial*	Cite No	Patent Number	Kind Code[1]	Issue Date	Name of Patentee or Applicant of cited Document	Pages,Columns,Lines where Relevant Passages or Relevant Figures Appear
	1	7587450	B2	2009-09-08	Morris	
If you wish to add additional U.S. Patent citation information please click the Add button.						Add

U.S.PATENT APPLICATION PUBLICATIONS						Remove
Examiner Initial*	Cite No	Publication Number	Kind Code[1]	Publication Date	Name of Patentee or Applicant of cited Document	Pages,Columns,Lines where Relevant Passages or Relevant Figures Appear
	1	20070150814	A1	2007-06-28	Morris	
	2	20090254627	A1	2009-10-08	Morris	
	3	20090144753	A1	2009-01-04	Morris	
	4	20080077653	A1	2008-03-27	Morris	
	5	20070005725	A1	2007-01-04	Morris	
If you wish to add additional U.S. Published Application citation information please click the Add button.						Add

FOREIGN PATENT DOCUMENTS	Remove

INFORMATION DISCLOSURE STATEMENT BY APPLICANT (Not for submission under 37 CFR 1.99)	Application Number	
	Filing Date	2010-05-28
	First Named Inventor	Robert Paul Morris
	Art Unit	
	Examiner Name	
	Attorney Docket Number	0147

Examiner Initial*	Cite No	Foreign Document Number[3]	Country Code[2] ¡	Kind Code[4]	Publication Date	Name of Patentee or Applicant of cited Document	Pages,Columns,Lines where Relevant Passages or Relevant Figures Appear	T[5]
	1							☐

If you wish to add additional Foreign Patent Document citation information please click the Add button Add

NON-PATENT LITERATURE DOCUMENTS Remove

Examiner Initials*	Cite No	Include name of the author (in CAPITAL LETTERS), title of the article (when appropriate), title of the item (book, magazine, journal, serial, symposium, catalog, etc), date, pages(s), volume-issue number(s), publisher, city and/or country where published.	T[5]
	1	NIELSON, H. FRYSTYK, et al, "HTTP-NG Overview", Internet Draft, 2009-11-17, IETF	☐
	2	FIELDING, R, et al, "Hypertext Transfer Protocol -- HTTP/1.1", RFC 2616, 1999-06, IETF	☐
	3	GETTYS, JIM, et al, "The WebMUX Protocol", draft-gettys-webmux-00.txt, 1998-08-01, IETF	☐
	4	UNKNOWN, "The Internet Needs a Session Layer", http://fanf.livejournal.com/53662.html, 2006-03-17	☐
	5	HICKSON, IAN, editor, "HTML5", Draft Standard, 2009-10-03, Web Hypertext Application Technology Working Group	☐

If you wish to add additional non-patent literature document citation information please click the Add button Add

EXAMINER SIGNATURE

Examiner Signature		Date Considered	

*EXAMINER: Initial if reference considered, whether or not citation is in conformance with MPEP 609. Draw line through a citation if not in conformance and not considered. Include copy of this form with next communication to applicant.

EFS Web 2.1.17

INFORMATION DISCLOSURE STATEMENT BY APPLICANT (Not for submission under 37 CFR 1.99)	Application Number	
	Filing Date	2010-05-28
	First Named Inventor	Robert Paul Morris
	Art Unit	
	Examiner Name	
	Attorney Docket Number	0147

[1] See Kind Codes of USPTO Patent Documents at www.USPTO.GOV or MPEP 901.04. [2] Enter office that issued the document, by the two-letter code (WIPO Standard ST.3). [3] For Japanese patent documents, the indication of the year of the reign of the Emperor must precede the serial number of the patent document. [4] Kind of document by the appropriate symbols as indicated on the document under WIPO Standard ST.16 if possible. [5] Applicant is to place a check mark here if English language translation is attached.

INFORMATION DISCLOSURE STATEMENT BY APPLICANT (Not for submission under 37 CFR 1.99)	Application Number	
	Filing Date	2010-05-28
	First Named Inventor	Robert Paul Morris
	Art Unit	
	Examiner Name	
	Attorney Docket Number	0147

CERTIFICATION STATEMENT

Please see 37 CFR 1.97 and 1.98 to make the appropriate selection(s):

☐ That each item of information contained in the information disclosure statement was first cited in any communication from a foreign patent office in a counterpart foreign application not more than three months prior to the filing of the information disclosure statement. See 37 CFR 1.97(e)(1).

OR

☐ That no item of information contained in the information disclosure statement was cited in a communication from a foreign patent office in a counterpart foreign application, and, to the knowledge of the person signing the certification after making reasonable inquiry, no item of information contained in the information disclosure statement was known to any individual designated in 37 CFR 1.56(c) more than three months prior to the filing of the information disclosure statement. See 37 CFR 1.97(e)(2).

☐ See attached certification statement.

☐ Fee set forth in 37 CFR 1.17 (p) has been submitted herewith.

☒ None

SIGNATURE

A signature of the applicant or representative is required in accordance with CFR 1.33, 10.18. Please see CFR 1.4(d) for the form of the signature.

Signature	/Robert Paul Morris/	Date (YYYY-MM-DD)	2010-05-28
Name/Print	Robert Paul Morris	Registration Number	

This collection of information is required by 37 CFR 1.97 and 1.98. The information is required to obtain or retain a benefit by the public which is to file (and by the USPTO to process) an application. Confidentiality is governed by 35 U.S.C. 122 and 37 CFR 1.14. This collection is estimated to take 1 hour to complete, including gathering, preparing and submitting the completed application form to the USPTO. Time will vary depending upon the individual case. Any comments on the amount of time you require to complete this form and/or suggestions for reducing this burden, should be sent to the Chief Information Officer, U.S. Patent and Trademark Office, U.S. Department of Commerce, P.O. Box 1450, Alexandria, VA 22313-1450. DO NOT SEND FEES OR COMPLETED FORMS TO THIS ADDRESS. **SEND TO: Commissioner for Patents, P.O. Box 1450, Alexandria, VA 22313-1450.**

Privacy Act Statement

The Privacy Act of 1974 (P.L. 93-579) requires that you be given certain information in connection with your submission of the attached form related to a patent application or patent. Accordingly, pursuant to the requirements of the Act, please be advised that: (1) the general authority for the collection of this information is 35 U.S.C. 2(b)(2); (2) furnishing of the information solicited is voluntary; and (3) the principal purpose for which the information is used by the U.S. Patent and Trademark Office is to process and/or examine your submission related to a patent application or patent. If you do not furnish the requested information, the U.S. Patent and Trademark Office may not be able to process and/or examine your submission, which may result in termination of proceedings or abandonment of the application or expiration of the patent.

The information provided by you in this form will be subject to the following routine uses:

1. The information on this form will be treated confidentially to the extent allowed under the Freedom of Information Act (5 U.S.C. 552) and the Privacy Act (5 U.S.C. 552a). Records from this system of records may be disclosed to the Department of Justice to determine whether the Freedom of Information Act requires disclosure of these record s.

2. A record from this system of records may be disclosed, as a routine use, in the course of presenting evidence to a court, magistrate, or administrative tribunal, including disclosures to opposing counsel in the course of settlement negotiations.

3. A record in this system of records may be disclosed, as a routine use, to a Member of Congress submitting a request involving an individual, to whom the record pertains, when the individual has requested assistance from the Member with respect to the subject matter of the record.

4. A record in this system of records may be disclosed, as a routine use, to a contractor of the Agency having need for the information in order to perform a contract. Recipients of information shall be required to comply with the requirements of the Privacy Act of 1974, as amended, pursuant to 5 U.S.C. 552a(m).

5. A record related to an International Application filed under the Patent Cooperation Treaty in this system of records may be disclosed, as a routine use, to the International Bureau of the World Intellectual Property Organization, pursuant to the Patent Cooperation Treaty.

6. A record in this system of records may be disclosed, as a routine use, to another federal agency for purposes of National Security review (35 U.S.C. 181) and for review pursuant to the Atomic Energy Act (42 U.S.C. 218(c)).

7. A record from this system of records may be disclosed, as a routine use, to the Administrator, General Services, or his/her designee, during an inspection of records conducted by GSA as part of that agency's responsibility to recommend improvements in records management practices and programs, under authority of 44 U.S.C. 2904 and 2906. Such disclosure shall be made in accordance with the GSA regulations governing inspection of records for this purpose, and any other relevant (i.e., GSA or Commerce) directive. Such disclosure shall not be used to make determinations about individuals.

8. A record from this system of records may be disclosed, as a routine use, to the public after either publication of the application pursuant to 35 U.S.C. 122(b) or issuance of a patent pursuant to 35 U.S.C. 151. Further, a record may be disclosed, subject to the limitations of 37 CFR 1.14, as a routine use, to the public if the record was filed in an application which became abandoned or in which the proceedings were terminated and which application is referenced by either a published application, an application open to public inspections or an issued patent.

9. A record from this system of records may be disclosed, as a routine use, to a Federal, State, or local law enforcement agency, if the USPTO becomes aware of a violation or potential violation of law or regulation.

Electronic Patent Application Fee Transmittal

Application Number:	
Filing Date:	
Title of Invention:	METHODS, SYSTEMS, AND COMPUTER PROGRAM PRODUCTS FOR PROCESSING AN ATTACHED COMMAND RESPONSE BASED ON A MARKUP ELEMENT
First Named Inventor/Applicant Name:	Robert Paul Morris
Filer:	Robert Paul Morris
Attorney Docket Number:	0147

Filed as Small Entity

Utility under 35 USC 111(a) Filing Fees

Description	Fee Code	Quantity	Amount	Sub-Total in USD($)
Basic Filing:				
Utility filing Fee (Electronic filing)	4011	1	82	82
Utility Search Fee	2111	1	270	270
Utility Examination Fee	2311	1	110	110
Pages:				
Claims:				
Claims in excess of 20	2202	1	26	26
Independent claims in excess of 3	2201	3	110	330
Miscellaneous-Filing:				

Description	Fee Code	Quantity	Amount	Sub-Total in USD($)
Petition:				
Patent-Appeals-and-Interference:				
Post-Allowance-and-Post-Issuance:				
Extension-of-Time:				
Miscellaneous:				
			Total in USD ($)	**818**

Electronic Acknowledgement Receipt

EFS ID:	7701107
Application Number:	12789538
International Application Number:	
Confirmation Number:	8814
Title of Invention:	METHODS, SYSTEMS, AND COMPUTER PROGRAM PRODUCTS FOR PROCESSING AN ATTACHED COMMAND RESPONSE BASED ON A MARKUP ELEMENT
First Named Inventor/Applicant Name:	Robert Paul Morris
Customer Number:	92924
Filer:	Robert Paul Morris
Filer Authorized By:	
Attorney Docket Number:	0147
Receipt Date:	28-MAY-2010
Filing Date:	
Time Stamp:	10:26:02
Application Type:	Utility under 35 USC 111(a)

Payment information:

Submitted with Payment	yes
Payment Type	Credit Card
Payment was successfully received in RAM	$818
RAM confirmation Number	9376
Deposit Account	505171
Authorized User	MORRIS,ROBERT PAUL

The Director of the USPTO is hereby authorized to charge indicated fees and credit any overpayment as follows:

Charge any Additional Fees required under 37 C.F.R. Section 1.17 (Patent application and reexamination processing fees)

Charge any Additional Fees required under 37 C.F.R. Section 1.19 (Document supply fees)

Charge any Additional Fees required under 37 C.F.R. Section 1.20 (Post Issuance fees)

Charge any Additional Fees required under 37 C.F.R. Section 1.21 (Miscellaneous fees and charges)

File Listing:

Document Number	Document Description	File Name	File Size(Bytes)/ Message Digest	Multi Part /.zip	Pages (if appl.)
1	NPL Documents	Nielson-HTTPNGOverview.pdf	92023 aea125c7611dc4eb88b3a9f8d103d9f07ee864a7	no	12
Warnings:					
Information:					
2	NPL Documents	Fielding-rfc-2616-HTTP.pdf	343462 ccfef59b7c85091da68cb5a99bc18d777aa793e6	no	132
Warnings:					
Information:					
3	NPL Documents	Gettys-WebMUXProtocol.pdf	219027 1189e93907b677bb3ade6f42461b9dd870edf15b	no	11
Warnings:					
Information:					
4	NPL Documents	Unknown-InternetNeedsSessionLayer.pdf	158491 1e3d9c052a9a7d11599f086c8dbc078648cd8a79	no	3
Warnings:					
Information:					
5	NPL Documents	Hickson-HTML5.pdf	2560839 5dc4158b63613f955d6ed1623221889d356182a5	no	664
Warnings:					
Information:					
6	Abstract	0147-Abstract.pdf	30031 3d34800b6ebc1bb5eb83988d80f824c87348d523	no	1
Warnings:					
Information:					
7	Application Data Sheet	0147-ADS.pdf	1364652 d8f402ed98c1b49ba30e31c61e7c12be78af92e2	no	4
Warnings:					
Information:					
8	Claims	0147-Claims.pdf	55234 c2ed0d04549dfbb90058580f7119477ff6f05056	no	9
Warnings:					

Information:					
9	Drawings-only black and white line drawings	0147-Drawings.pdf	182624 9f550425a408f7b183dfbaa524bf9e4557b1afd9	no	15
Warnings:					
Information:					
10	Oath or Declaration filed	0147-Oath.pdf	545030 c34768126f9595353ceee4d579028465b0e2a744	no	2
Warnings:					
Information:					
11	Specification	0147-Specification.pdf	181900 0feecc8df51a7ccd4365235fc39bc6aa3f00e54b	no	69
Warnings:					
Information:					
12	Information Disclosure Statement (IDS) Filed (SB/08)	0147-US_IDS_Form__SB_08a.pdf	612286 d37b4e52002bc828f2b1b1e54f815723476c35d9	no	5
Warnings:					
Information:					
13	Fee Worksheet (PTO-875)	fee-info.pdf	38016 ca1c831f6094305885cb1058f32a47d7ba0e3e74	no	2
Warnings:					
Information:					
		Total Files Size (in bytes):	6383615		

This Acknowledgement Receipt evidences receipt on the noted date by the USPTO of the indicated documents, characterized by the applicant, and including page counts, where applicable. It serves as evidence of receipt similar to a Post Card, as described in MPEP 503.

<u>New Applications Under 35 U.S.C. 111</u>
If a new application is being filed and the application includes the necessary components for a filing date (see 37 CFR 1.53(b)-(d) and MPEP 506), a Filing Receipt (37 CFR 1.54) will be issued in due course and the date shown on this Acknowledgement Receipt will establish the filing date of the application.

<u>National Stage of an International Application under 35 U.S.C. 371</u>
If a timely submission to enter the national stage of an international application is compliant with the conditions of 35 U.S.C. 371 and other applicable requirements a Form PCT/DO/EO/903 indicating acceptance of the application as a national stage submission under 35 U.S.C. 371 will be issued in addition to the Filing Receipt, in due course.

<u>New International Application Filed with the USPTO as a Receiving Office</u>
If a new international application is being filed and the international application includes the necessary components for an international filing date (see PCT Article 11 and MPEP 1810), a Notification of the International Application Number and of the International Filing Date (Form PCT/RO/105) will be issued in due course, subject to prescriptions concerning national security, and the date shown on this Acknowledgement Receipt will establish the international filing date of the application.

ABSTRACT

Methods and systems are described for processing an attached command response based on a markup element. In one aspect, a resource including an attach markup element is sent. A first request message identifying a command and a second request message are received including attach-request information based on the element. Either or both of a command response to the command and a response message to the second request message is determined attachable. In response, the response message is sent including some or all of the command response.

In another aspect, a resource including an attach markup element is received. A first request message identifying a command and a second request message are sent including attach-request information based on the element. In response, a second response message to the second request message is received including some or all of a command response to the command.

PTO/SB/14 (07-07)
Approved for use through 06/30/2010. OMB 0651-0032
U.S. Patent and Trademark Office; U.S. DEPARTMENT OF COMMERCE
Under the Paperwork Reduction Act of 1995, no persons are required to respond to a collection of information unless it contains a valid OMB control number.

Application Data Sheet 37 CFR 1.76	Attorney Docket Number	0147
	Application Number	
Title of Invention	METHODS, SYSTEMS, AND COMPUTER PROGRAM PRODUCTS FOR PROCESSING AN ATTACHED COMMAND RESPONSE BASED ON A MARKUP ELEMENT	

The application data sheet is part of the provisional or nonprovisional application for which it is being submitted. The following form contains the bibliographic data arranged in a format specified by the United States Patent and Trademark Office as outlined in 37 CFR 1.76.
This document may be completed electronically and submitted to the Office in electronic format using the Electronic Filing System (EFS) or the document may be printed and included in a paper filed application.

Secrecy Order 37 CFR 5.2

☐ Portions or all of the application associated with this Application Data Sheet may fall under a Secrecy Order pursuant to 37 CFR 5.2 (Paper filers only. Applications that fall under Secrecy Order may not be filed electronically.)

Applicant Information:

Applicant 1 Remove

Applicant Authority ◉ Inventor ◯ Legal Representative under 35 U.S.C. 117 ◯ Party of Interest under 35 U.S.C. 118

Prefix	Given Name	Middle Name	Family Name	Suffix
	Robert	Paul	Morris	

Residence Information (Select One) ◉ US Residency ◯ Non US Residency ◯ Active US Military Service

City	Raleigh	State/Province	NC	Country of Residence i	US

Citizenship under 37 CFR 1.41(b) i US

Mailing Address of Applicant:

Address 1	712 Latta Street		
Address 2			
City	Raleigh	**State/Province**	NC
Postal Code	27607	**Country**i	US

All Inventors Must Be Listed - Additional Inventor Information blocks may be generated within this form by selecting the **Add** button. Add

Correspondence Information:

Enter either Customer Number or complete the Correspondence Information section below.
For further information see 37 CFR 1.33(a).

☐ **An Address is being provided for the correspondence Information of this application.**

Customer Number	92924	
Email Address	paul.morris@nc.rr.com	Add Email Remove Email

Application Information:

Title of the Invention	METHODS, SYSTEMS, AND COMPUTER PROGRAM PRODUCTS FOR PROCESSING AN ATTACHED COMMAND RESPONSE BASED ON A MARKUP ELEMENT		
Attorney Docket Number	0147	**Small Entity Status Claimed**	☒
Application Type	Nonprovisional		
Subject Matter	Utility		
Suggested Class (if any)		**Sub Class (if any)**	
Suggested Technology Center (if any)			
Total Number of Drawing Sheets (if any)	15	**Suggested Figure for Publication (if any)**	

Under the Paperwork Reduction Act of 1995, no persons are required to respond to a collection of information unless it contains a valid OMB control number.

Application Data Sheet 37 CFR 1.76	Attorney Docket Number	0147
	Application Number	
Title of Invention	METHODS, SYSTEMS, AND COMPUTER PROGRAM PRODUCTS FOR PROCESSING AN ATTACHED COMMAND RESPONSE BASED ON A MARKUP ELEMENT	

Publication Information:

☐	Request Early Publication (Fee required at time of Request 37 CFR 1.219)
☐	**Request Not to Publish.** I hereby request that the attached application not be published under 35 U.S. C. 122(b) and certify that the invention disclosed in the attached application **has not and will not** be the subject of an application filed in another country, or under a multilateral international agreement, that requires publication at eighteen months after filing.

Representative Information:

Representative information should be provided for all practitioners having a power of attorney in the application. Providing this information in the Application Data Sheet does not constitute a power of attorney in the application (see 37 CFR 1.32).
Enter either Customer Number or complete the Representative Name section below. If both sections are completed the Customer Number will be used for the Representative Information during processing.

Please Select One:	◉ Customer Number	◯ US Patent Practitioner	◯ Limited Recognition (37 CFR 11.9)
Customer Number	92924		

Domestic Benefit/National Stage Information:

This section allows for the applicant to either claim benefit under 35 U.S.C. 119(e), 120, 121, or 365(c) or indicate National Stage entry from a PCT application. Providing this information in the application data sheet constitutes the specific reference required by 35 U.S.C. 119(e) or 120, and 37 CFR 1.78(a)(2) or CFR 1.78(a)(4), and need not otherwise be made part of the specification.

Prior Application Status			Remove
Application Number	Continuity Type	Prior Application Number	Filing Date (YYYY-MM-DD)

Additional Domestic Benefit/National Stage Data may be generated within this form by selecting the **Add** button. Add

Foreign Priority Information:

This section allows for the applicant to claim benefit of foreign priority and to identify any prior foreign application for which priority is not claimed. Providing this information in the application data sheet constitutes the claim for priority as required by 35 U.S.C. 119(b) and 37 CFR 1.55(a).

Remove

Application Number	Country i	Parent Filing Date (YYYY-MM-DD)	Priority Claimed
			◉ Yes ◯ No

Additional Foreign Priority Data may be generated within this form by selecting the **Add** button. Add

Assignee Information:

Providing this information in the application data sheet does not substitute for compliance with any requirement of part 3 of Title 37 of the CFR to have an assignment recorded in the Office.

Assignee 1 Remove

Under the Paperwork Reduction Act of 1995, no persons are required to respond to a collection of information unless it contains a valid OMB control number.

Application Data Sheet 37 CFR 1.76	Attorney Docket Number	0147
	Application Number	
Title of Invention	METHODS, SYSTEMS, AND COMPUTER PROGRAM PRODUCTS FOR PROCESSING AN ATTACHED COMMAND RESPONSE BASED ON A MARKUP ELEMENT	

If the Assignee is an Organization check here. ☐				
Prefix	**Given Name**	Middle Name	**Family Name**	Suffix
Mailing Address Information:				
Address 1				
Address 2				
City		**State/Province**		
Country i		Postal Code		
Phone Number		Fax Number		
Email Address				
Additional Assignee Data may be generated within this form by selecting the **Add** button.				Add

Signature:

A signature of the applicant or representative is required in accordance with 37 CFR 1.33 and 10.18. Please see 37 CFR 1.4(d) for the form of the signature.					
Signature	/Robert Paul Morris/			Date (YYYY-MM-DD)	2010-05-28
First Name	Robert	Last Name	Morris	Registration Number	

This collection of information is required by 37 CFR 1.76. The information is required to obtain or retain a benefit by the public which is to file (and by the USPTO to process) an application. Confidentiality is governed by 35 U.S.C. 122 and 37 CFR 1.14. This collection is estimated to take 23 minutes to complete, including gathering, preparing, and submitting the completed application data sheet form to the USPTO. Time will vary depending upon the individual case. Any comments on the amount of time you require to complete this form and/or suggestions for reducing this burden, should be sent to the Chief Information Officer, U.S. Patent and Trademark Office, U.S. Department of Commerce, P.O. Box 1450, Alexandria, VA 22313-1450. DO NOT SEND FEES OR COMPLETED FORMS TO THIS ADDRESS. **SEND TO: Commissioner for Patents, P.O. Box 1450, Alexandria, VA 22313-1450.**

Privacy Act Statement

The Privacy Act of 1974 (P.L. 93-579) requires that you be given certain information in connection with your submission of the attached form related to a patent application or patent. Accordingly, pursuant to the requirements of the Act, please be advised that: (1) the general authority for the collection of this information is 35 U.S.C. 2(b)(2); (2) furnishing of the information solicited is voluntary; and (3) the principal purpose for which the information is used by the U.S. Patent and Trademark Office is to process and/or examine your submission related to a patent application or patent. If you do not furnish the requested information, the U.S. Patent and Trademark Office may not be able to process and/or examine your submission, which may result in termination of proceedings or abandonment of the application or expiration of the patent.

The information provided by you in this form will be subject to the following routine uses:

1. The information on this form will be treated confidentially to the extent allowed under the Freedom of Information Act (5 U.S.C. 552) and the Privacy Act (5 U.S.C. 552a). Records from this system of records may be disclosed to the Department of Justice to determine whether the Freedom of Information Act requires disclosure of these records.

2. A record from this system of records may be disclosed, as a routine use, in the course of presenting evidence to a court, magistrate, or administrative tribunal, including disclosures to opposing counsel in the course of settlement negotiations.

3. A record in this system of records may be disclosed, as a routine use, to a Member of Congress submitting a request involving an individual, to whom the record pertains, when the individual has requested assistance from the Member with respect to the subject matter of the record.

4. A record in this system of records may be disclosed, as a routine use, to a contractor of the Agency having need for the information in order to perform a contract. Recipients of information shall be required to comply with the requirements of the Privacy Act of 1974, as amended, pursuant to 5 U.S.C. 552a(m).

5. A record related to an International Application filed under the Patent Cooperation Treaty in this system of records may be disclosed, as a routine use, to the International Bureau of the World Intellectual Property Organization, pursuant to the Patent Cooperation Treaty.

6. A record in this system of records may be disclosed, as a routine use, to another federal agency for purposes of National Security review (35 U.S.C. 181) and for review pursuant to the Atomic Energy Act (42 U.S.C. 218(c)).

7. A record from this system of records may be disclosed, as a routine use, to the Administrator, General Services, or his/her designee, during an inspection of records conducted by GSA as part of that agency's responsibility to recommend improvements in records management practices and programs, under authority of 44 U.S.C. 2904 and 2906. Such disclosure shall be made in accordance with the GSA regulations governing inspection of records for this purpose, and any other relevant (i.e., GSA or Commerce) directive. Such disclosure shall not be used to make determinations about individuals.

8. A record from this system of records may be disclosed, as a routine use, to the public after either publication of the application pursuant to 35 U.S.C. 122(b) or issuance of a patent pursuant to 35 U.S.C. 151. Further, a record may be disclosed, subject to the limitations of 37 CFR 1.14, as a routine use, to the public if the record was filed in an application which became abandoned or in which the proceedings were terminated and which application is referenced by either a published application, an application open to public inspections or an issued patent.

9. A record from this system of records may be disclosed, as a routine use, to a Federal, State, or local law enforcement agency, if the USPTO becomes aware of a violation or potential violation of law or regulation.

I CLAIM:

1. A method for processing an attached command response based on a markup element, the method comprising:

sending, via a network to a user agent node, a first resource including a first attach markup element;

receiving a first request message identifying a first command and receiving a second request message identifying a second command, wherein, based on the first attach markup element, at least one of the first request message includes first attach-request information and the second request message includes second attach-request information;

determining at least one of that a first command response to the first command is an attachable command response based on the first attach-request information and that a second response message to the second request message is an attachable response message based on the second attach-request information; and

in response to the determination, sending, to the user agent node in the second response message, an attached command response including at least a portion of the first command response.

2. The method of claim 1 wherein receiving the first request message includes receiving the first request message including the first attach-request information and including first command information identifying the first command,

wherein the first attach-request information is based on the first attach markup element and the first command information is based on the first resource.

3. The method of claim 2 wherein determining that the first command response is an attachable command response includes determining that the first command response is attachable in response to receiving the first attach-request information.

4. The method of claim 3 wherein determining that the second response message is attachable includes determining that the second response message is attachable based on determining the first command response is attachable.

5. The method of claim 4 wherein determining that the second response message is attachable comprises:

sending, to the user agent node, a second resource including a second attach markup element;

receiving the second request message including second command information based on the second resource and including the second attach-request information based on the second attach markup element; and

determining that the second response message is attachable based on the second attach-request information.

6. The method of claim 1 wherein receiving the second request message includes receiving the second request message including the second request information and second command information identifying the second command, wherein

the second request information is based on the first attach markup element and the second command information is based on the first resource.

7. The method of claim 6 wherein determining that the second response message is an attachable response message includes determining that the second response message is attachable in response to receiving the second attach-request information in the second request message.

8. The method of claim 7 wherein determining that the first command response is attachable includes determining that the first command response is attachable based on determining that the second response message is attachable.

9. The method of claim 8 wherein determining that the first command response is attachable comprises:

sending, to the user agent node, a second resource including a second attach markup element;

receiving the first request message including first command information based on the second resource and including the first attach-request information based on the second attach markup element; and

determining that the first command response is attachable based on the first attach markup information.

10. The method of claim 1 further comprises:

determining that a second attach-condition is met based on the second attach-request information; and

in response to determining that the second attach-request condition is met, at least one of performing the first command and generating the attached command response.

11. The method of claim 1 further include sending to the user agent node a first response message to the first request message including at most the portion of the first command response, in response to determining that the first command response is attachable.

12. A method for processing an attached command response based on a markup element, the method comprising:

receiving, via a network from a server node, a first resource including a first attach markup element;

sending a first request message identifying a first command and sending a second request message identifying a second command, wherein, based on the first attach markup element, at least one the first request message includes first attach-request information and the second request message includes second attach-request information; and

in response to sending at least one of the first attach-request information and the second attach-request information, receiving, in a second response message to the second request message, an attached command response including at least a portion of a first command response for the first command.

13. The method of claim 12 wherein sending the first request message includes sending the first request message including the first attach-request information and including first command information identifying the first command, wherein the first attach-request information is based on the first attach markup element and the first command information is based on the first resource.

14. The method of claim 13 wherein sending the second request message comprises:

receiving a second resource including a second attach markup element; and

sending the second request message including second command information based on the second resource and including the second attach-request information based on the second attach markup element to indicate that the second response message is attachable based on the second attach-request information.

15. The method of claim 12 wherein sending the second request message includes sending the second request message including the second attach request information and including second command information identifying the second command, wherein the second attach-request information is based on the first attach markup element and the second command information is based on the first resource.

16. The method of claim 15 wherein sending the first request message comprises:

receiving a second resource including a second attach markup element;

sending the first request message including first command information, based on the second resource, and including the first attach-request information, based on the second attach markup element, indicating that the first command response is attachable based on the first attach-request information.

17. The method of claim 12 further includes receiving from the server node a first response message to the first request message including at most the portion of the first command response, in response to sending the first request message identifying the first command determined to be attachable by the server node.

18. A system for processing an attached command response based on a markup element, the system comprising:

an execution environment including an instruction-processing unit configured to process an instruction included in at least one of a resource generator component, a request-in component, an attach director component, and a response-out component;

the resource generator component configured for sending, via a network to a user agent node, a first resource including a first attach markup element;

the request-in component configured for receiving a first request message identifying a first command and receiving a second request message identifying a second command, wherein, based on the first attach markup element, at least one of the first request message includes first attach-request information and the second request message includes second attach-request information;

the attach director component configured for determining at least one of that a first command response to the first command is an attachable command response based on the first attach-request information and that a second response message to the second request message is an attachable response message based on the second attach-request information; and

the response-out component configured for, in response to the determination, sending, to the user agent node in the second response message, an attached command response including at least a portion of the first command response.

19. A system for processing an attached command response based on a markup element, the system comprising:

an execution environment including an instruction-processing unit configured to process an instruction included in at least one of a markup content handler component, a request-out component, and an attached response component;

the markup content handler component configured for receiving, via a network from a server node, a first resource including a first attach markup element;

the request-out component configured for sending a first request message identifying a first command and sending a second request message identifying a second command, wherein, based on the first attach markup element, at least one the first request message includes first attach-request information and the second request message includes second attach-request information; and

the attached response component configured for, in response to sending at least one of the first attach-request information and the second attach-request

information, receiving, in a second response message to the second request message, an attached command response including at least a portion of a first command response for the first command.

20. A computer readable medium embodying a computer program, executable by a machine, for processing an attached command response based on a markup element, the computer program comprising executable instructions for:

sending, via a network to a user agent node, a first resource including a first attach markup element;

receiving a first request message identifying a first command and receiving a second request message identifying a second command, wherein, based on the first attach markup element, at least one of the first request message includes first attach-request information and the second request message includes second attach-request information;

determining at least one of that a first command response to the first command is an attachable command response based on the first attach-request information and that a second response message to the second request message is an attachable response message based on the second attach-request information; and

in response to the determination, sending, to the user agent node in the second response message, an attached command response including at least a portion of the first command response.

21. A computer readable medium embodying a computer program, executable by a machine, for processing an attached command response based on a markup element, the computer program comprising executable instructions for:

receiving, via a network from a server node, a first resource including a first attach markup element;

sending a first request message identifying a first command and sending a second request message identifying a second command, wherein, based on the first attach markup element, at least one the first request message includes first attach-request information and the second request message includes second attach-request information;

in response to sending at least one of the first attach-request information and the second attach-request information, receiving, in a second response message to the second request message, an attached command response including at least a portion of a first command response for the first command.

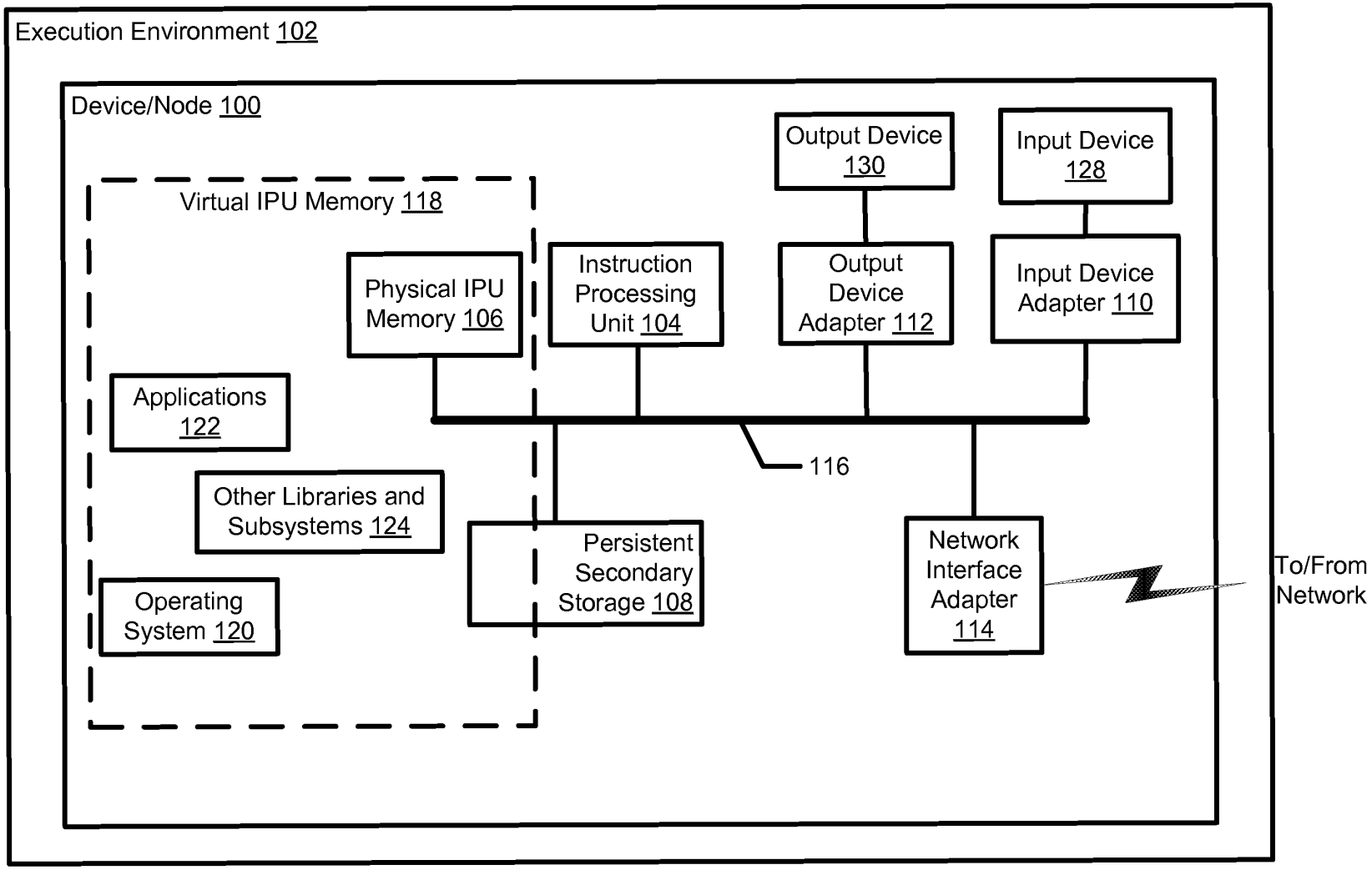
Execution Environment 102
Device/Node 100
Virtual IPU Memory 118
Physical IPU Memory 106
Applications 122
Other Libraries and Subsystems 124
Operating System 120
Instruction Processing Unit 104
Output Device 130
Input Device 128
Output Device Adapter 112
Input Device Adapter 110
116
Persistent Secondary Storage 108
Network Interface Adapter 114
To/From Network

Fig. 1

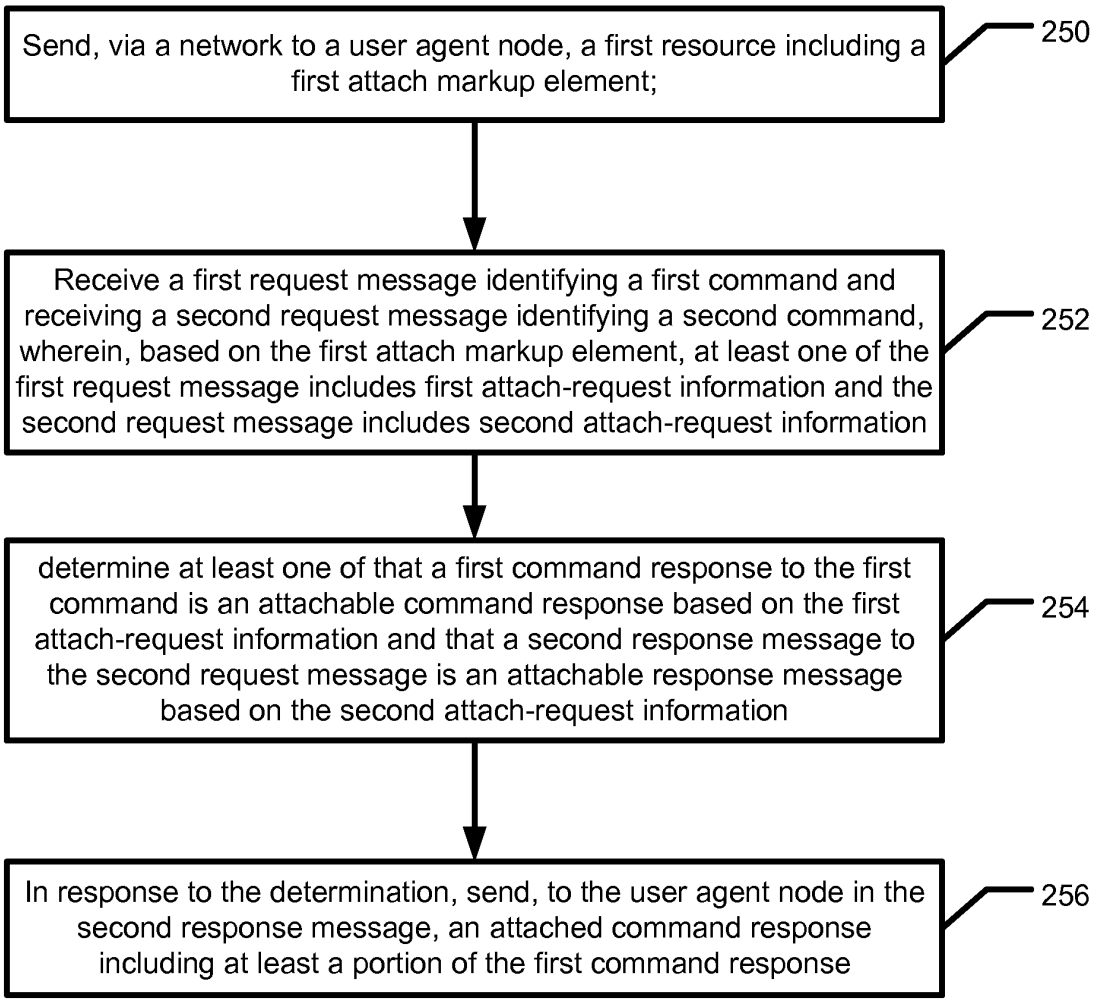
Send, via a network to a user agent node, a first resource including a first attach markup element;
250
Receive a first request message identifying a first command and receiving a second request message identifying a second command, wherein, based on the first attach markup element, at least one of the first request message includes first attach-request information and the second request message includes second attach-request information
252
determine at least one of that a first command response to the first command is an attachable command response based on the first attach-request information and that a second response message to the second request message is an attachable response message based on the second attach-request information
254
In response to the determination, send, to the user agent node in the second response message, an attached command response including at least a portion of the first command response
256

Fig. 2a

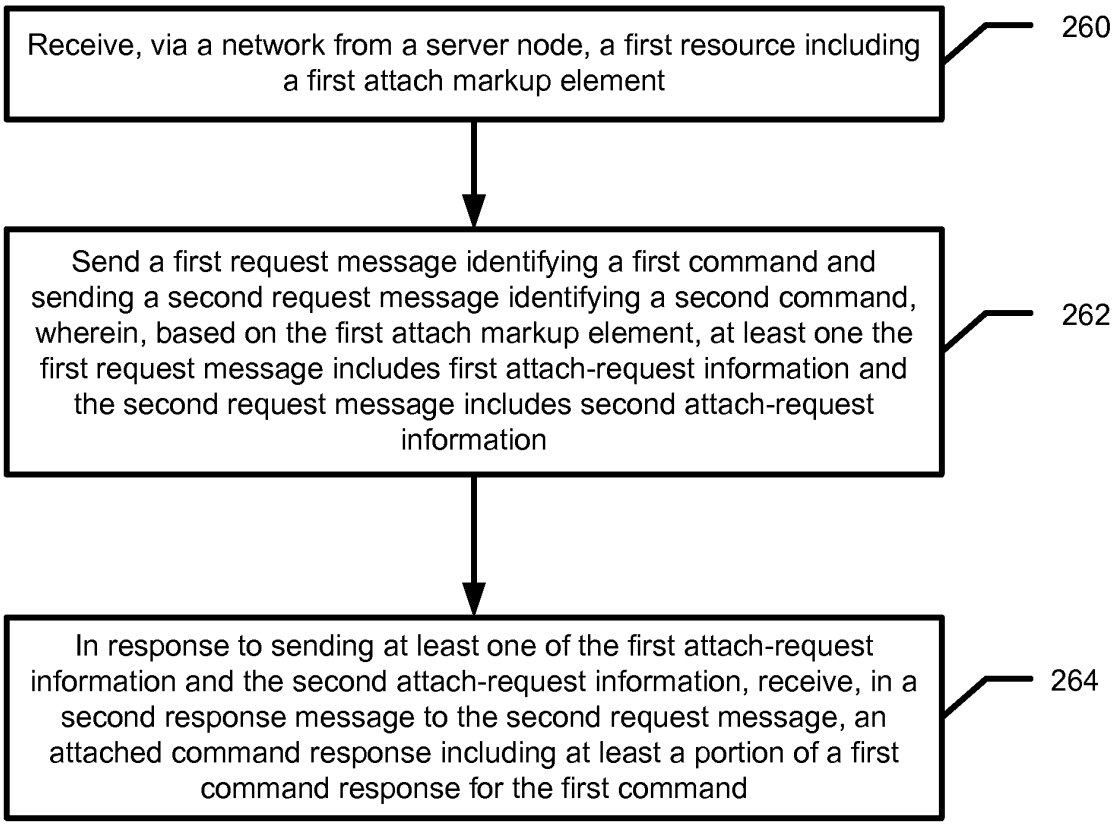
Receive, via a network from a server node, a first resource including a first attach markup element
260
Send a first request message identifying a first command and sending a second request message identifying a second command, wherein, based on the first attach markup element, at least one the first request message includes first attach-request information and the second request message includes second attach-request information
262
In response to sending at least one of the first attach-request information and the second attach-request information, receive, in a second response message to the second request message, an attached command response including at least a portion of a first command response for the first command
264

Fig. 2b

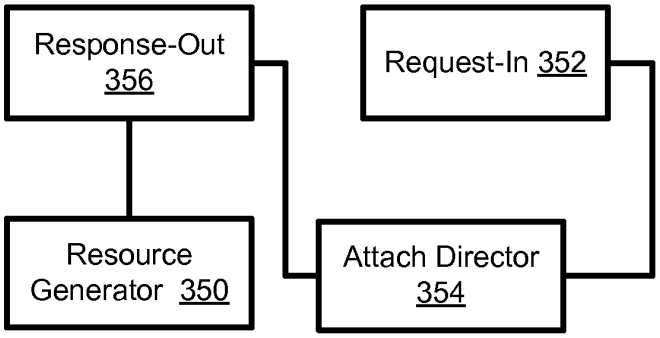
Response-Out
356
Request-In 352
Resource
Generator 350
Attach Director
354

Fig. 3a

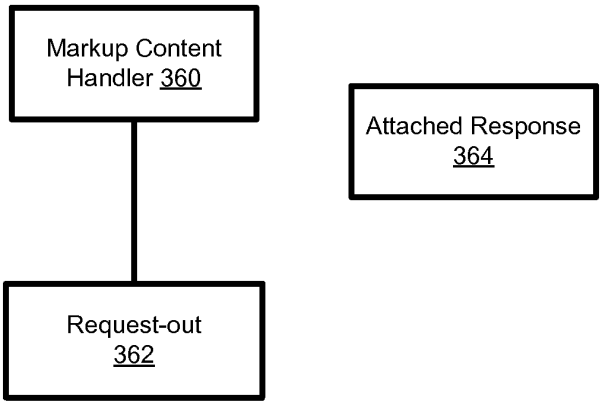
Markup Content
Handler 360
Attached Response
364
Request-out
362

Fig. 3b

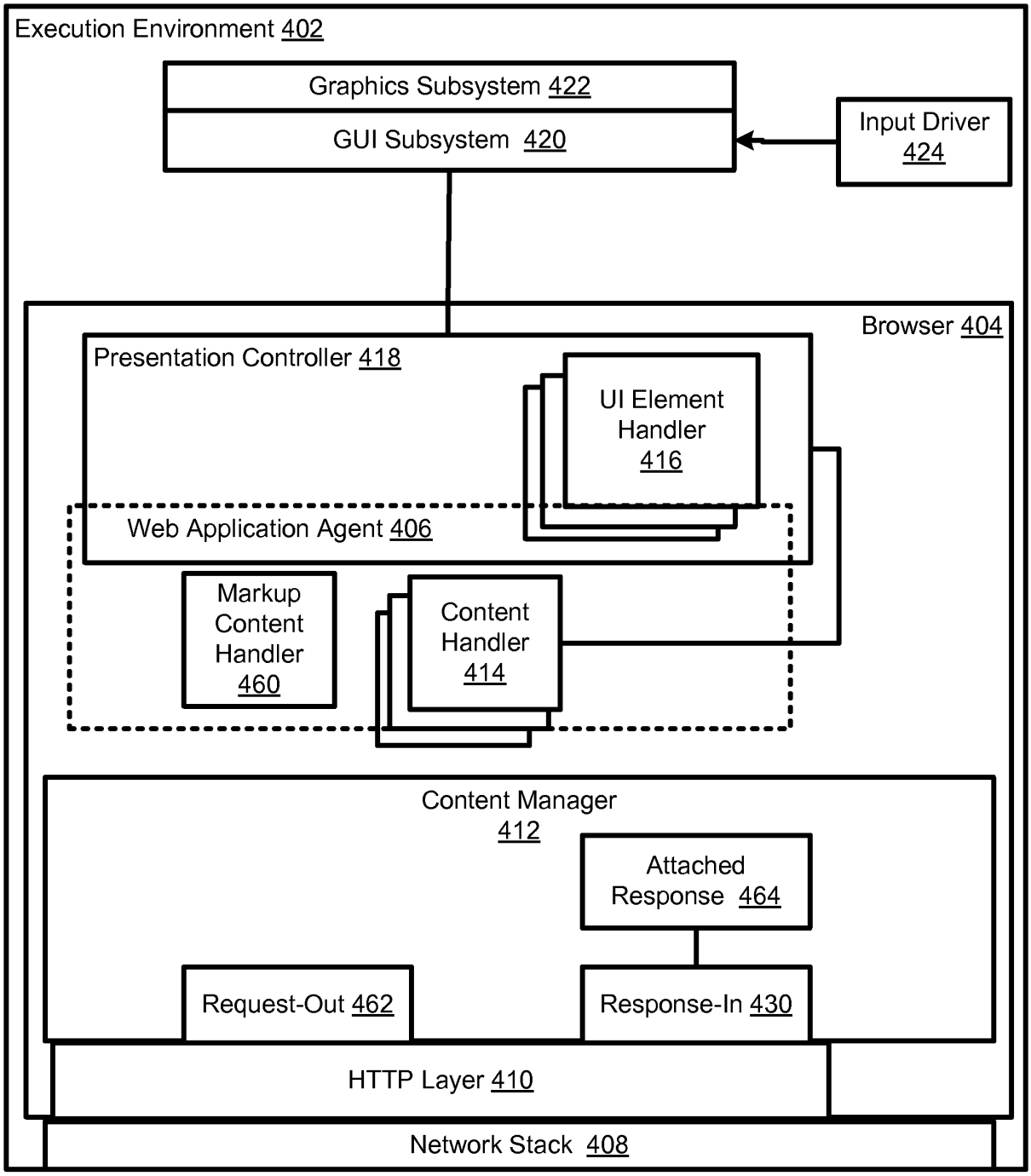
Execution Environment 402
Graphics Subsystem 422
GUI Subsystem 420
Input Driver 424
Browser 404
Presentation Controller 418
UI Element Handler 416
Web Application Agent 406
Markup Content Handler 460
Content Handler 414
Content Manager 412
Attached Response 464
Request-Out 462
Response-In 430
HTTP Layer 410
Network Stack 408

Fig. 4

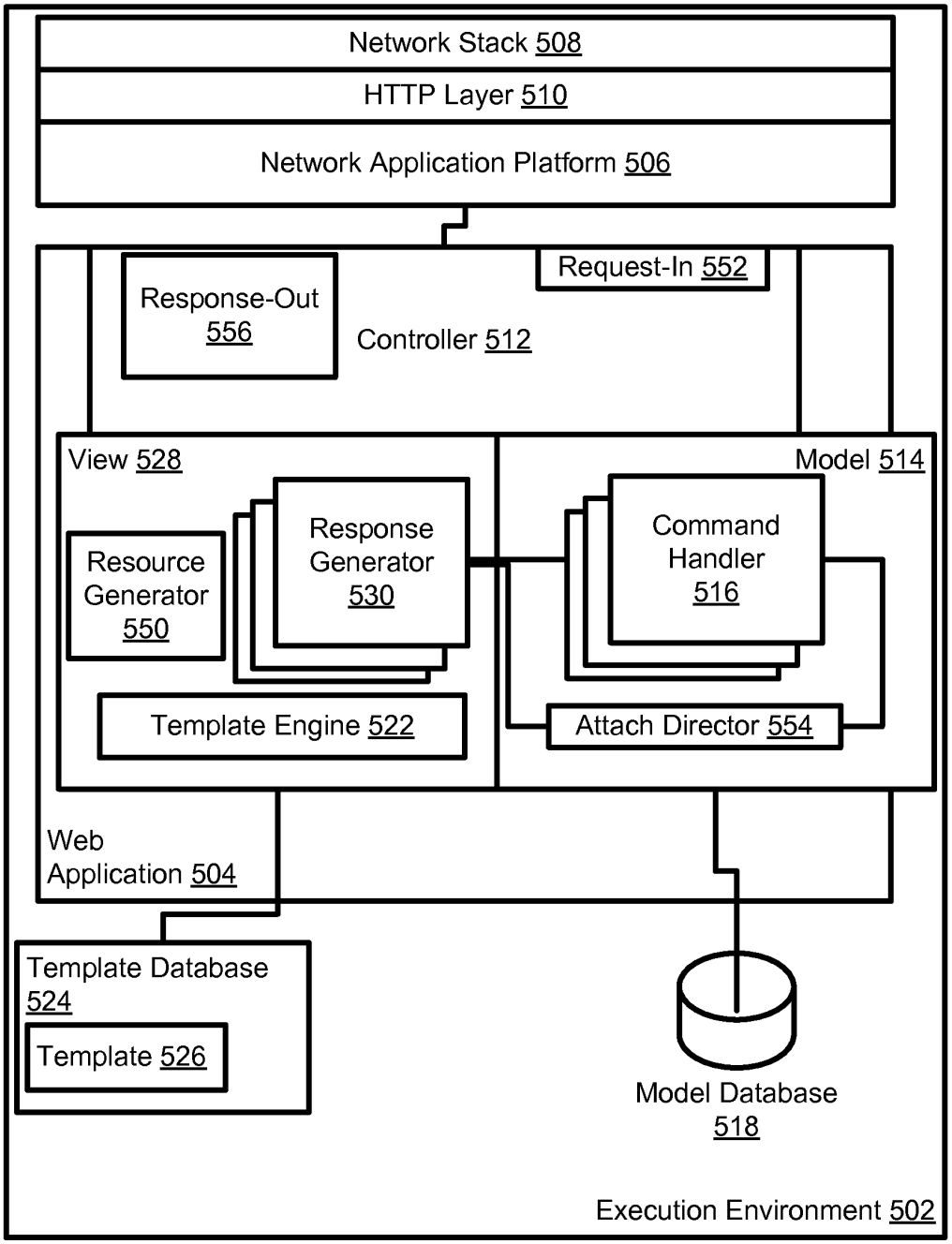
Network Stack 508
HTTP Layer 510
Network Application Platform 506
Request-In 552
Response-Out 556
Controller 512
View 528
Model 514
Response Generator 530
Resource Generator 550
Command Handler 516
Template Engine 522
Attach Director 554
Web Application 504
Template Database 524
Template 526
Model Database 518
Execution Environment 502

Fig. 5

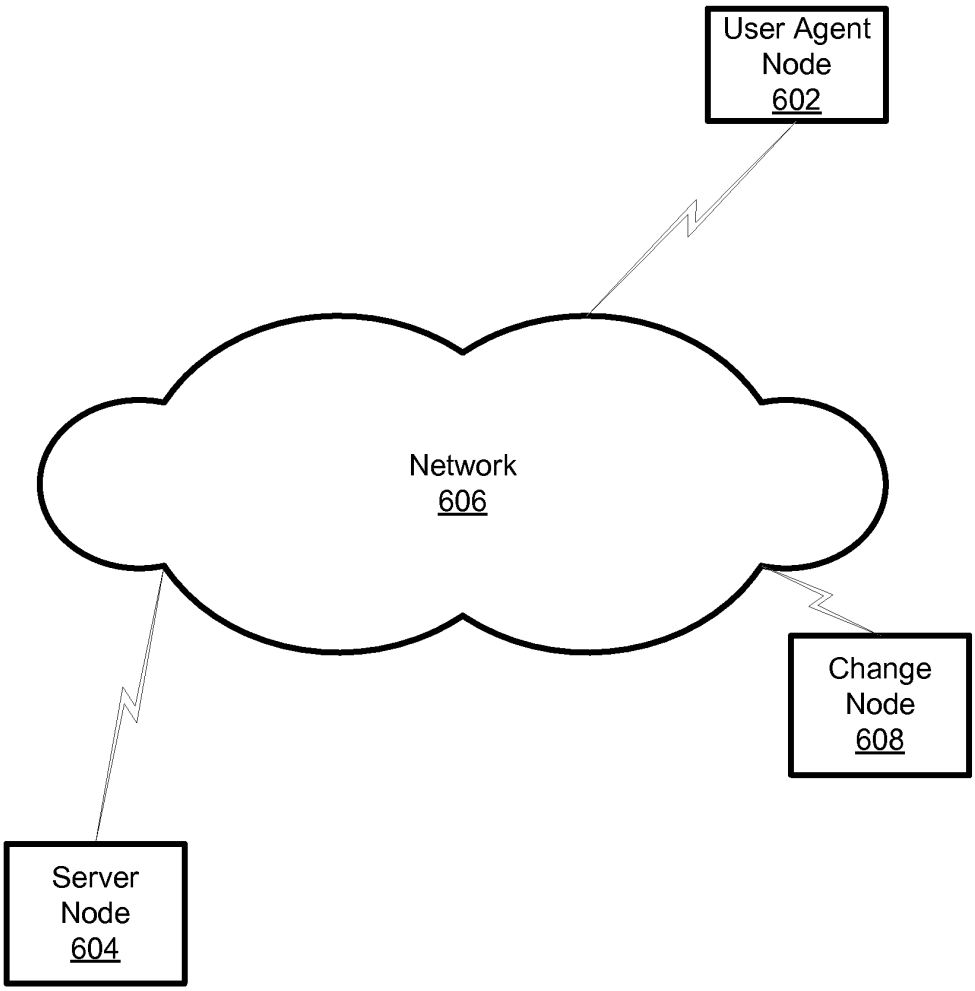
User Agent
Node
602
Network
606
Change
Node
608
Server
Node
604

Fig. 6

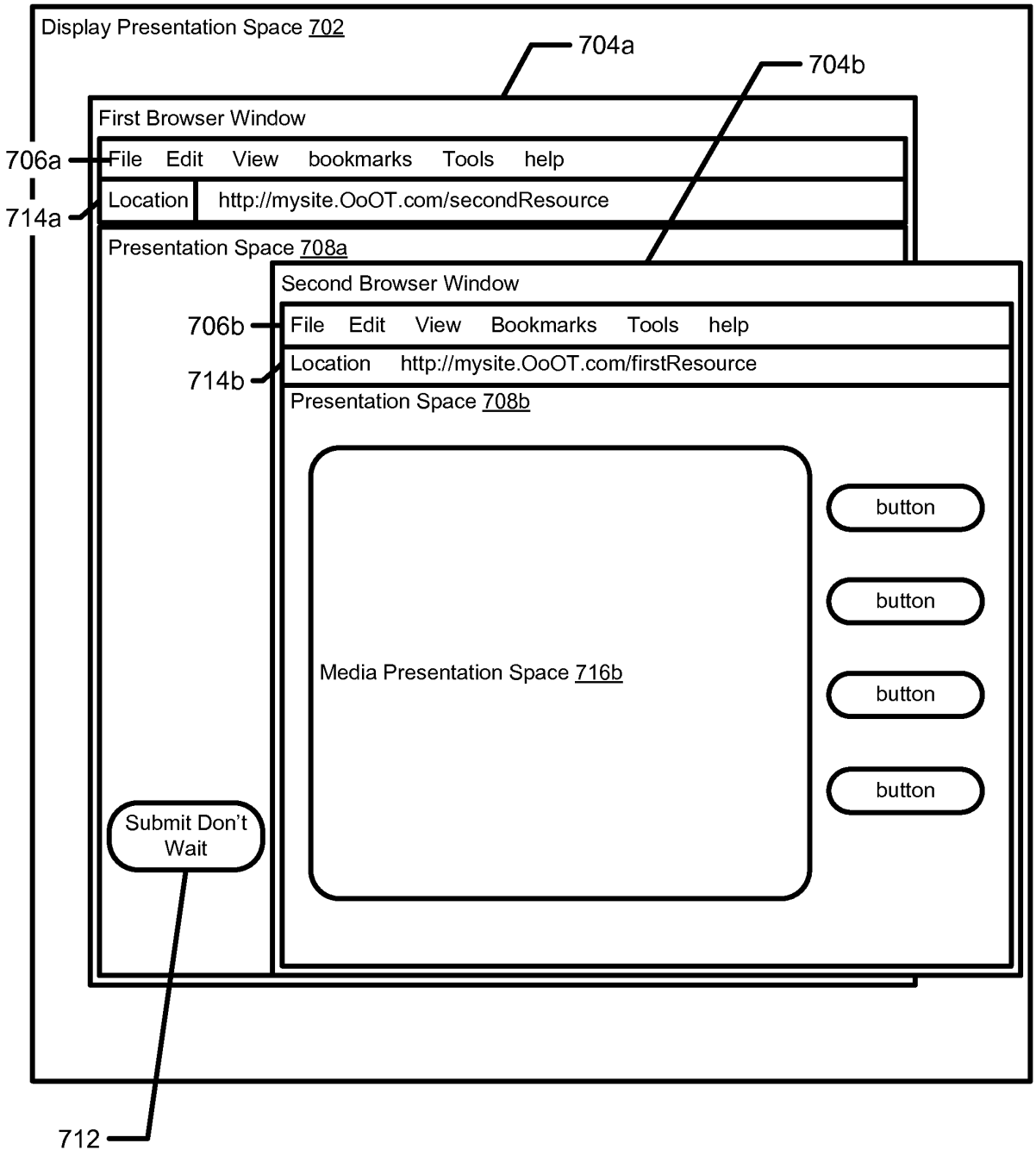
Display Presentation Space 702
704a
704b
First Browser Window
706a
File Edit View bookmarks Tools help
714a
Location
http://mysite.OoOT.com/secondResource
Presentation Space 708a
Second Browser Window
706b
File Edit View Bookmarks Tools help
714b
Location
http://mysite.OoOT.com/firstResource
Presentation Space 708b
button
button
button
button
Media Presentation Space 716b
Submit Don't Wait
712

Fig. 7

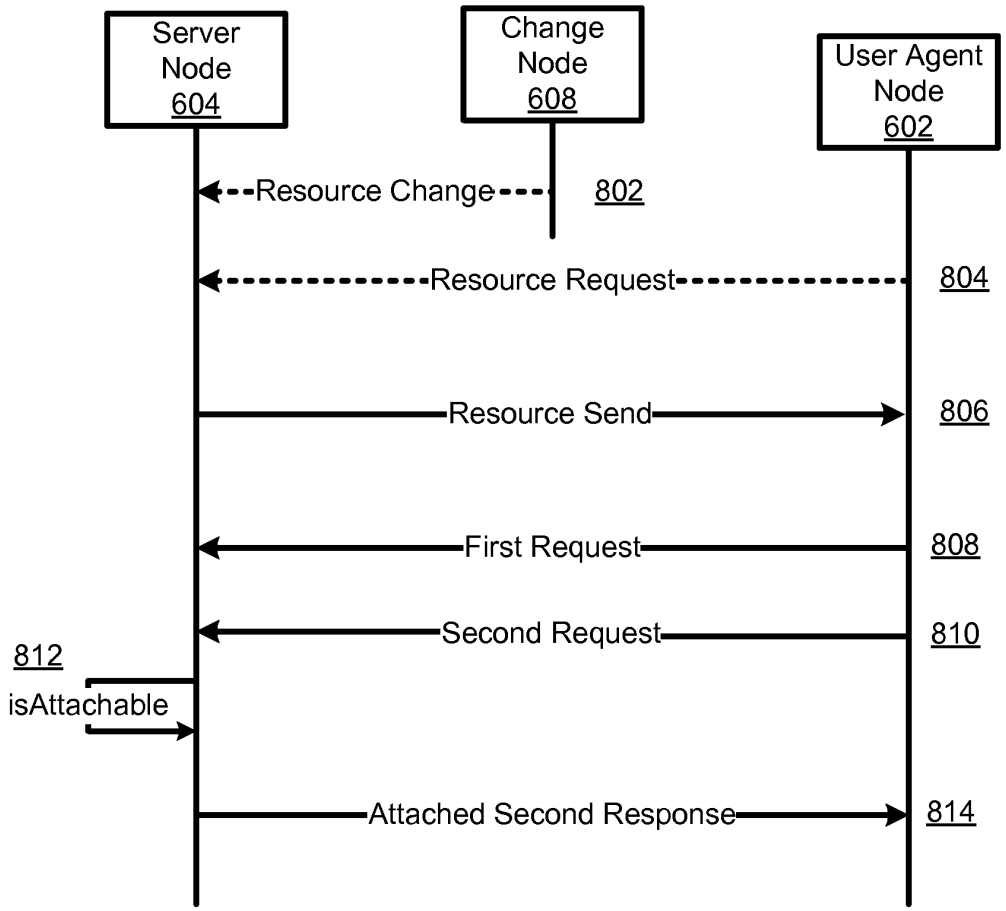
Server Node 604
Change Node 608
User Agent Node 602
Resource Change
802
Resource Request
804
Resource Send
806
First Request
808
Second Request
810
812
isAttachable
Attached Second Response
814

Fig. 8

904a 906a

```
<a href="www.mySite.us/services/medata?mediaID=mediaA"
attach="yes" attachcond="nextAvailable">Request Metadata</a>
```

900a

902a 908a

Fig. 9a

906b 908b

```
<form name="input" action="www.otherSite.net/path/formHandler.cgi"
method="post-attach">
Username:
<input type="text" name="user" />
<input type="submit/attachable" value="Submit No Wait" />
</form>
```

910b 900b 902b

Fig. 9b

```
<form>
First name:
<input type="text" name="firstname" onblur="log(this.form, attachable)" />
<br />
Last name:
<input type="text" name="lastname" />
</form>
```

904c 900c 906c 902c

Fig. 9c

902d 906d 904d

```
<attach responsemax="10s">
<form name="input" action="html_form_action.asp" scheme="pubsub"
method="publish">
First name: <input type="text" name="FirstName" value="Mickey" /><br />
Last name: <input type="text" name="LastName" value="Mouse" /><br />
<input type="submit" value="Submit" />
</form>
</attach>
```

900d

Fig. 9d

1004a 1002a

1000a

```
GET www.mySite.us/services/metadata?mediaID=mediaA HTTP/l.l
Host: finance.myExample.us.com
User-Agent: Mozilla/5.0 (Windows; U; Windows NT 5.1; en-US; rv: 1.8.0.7) Gecko/20060909 Firefox
1.5.0.7
Accept: text/xml,application/xml,application/xhtml+xml,text/html;q=0.9,text/plain;q=0.8, \
image/png,image/jpeg,multipart/attached
Accept-Language: en-us,en;q=0.5
Accept-Encoding: gzip,deflate
Accept-Charset: ISO-8859-l,utf-8;q=0.7,*;q=0.7
Keep-Alive: 300
Connection: keep-alive
Cookie: sessionid=AF13BOC
```

1008a

1006a

Fig. 10a

1004b 1002b

1000b

```
GET-ATTACH www.mySite.us/media/videoA HTTP/l.l
Host: finance.myExample.us.com
User-Agent: Mozilla/5.0 (Windows; U; Windows NT 5.1; en-US; rv: 1.8.0.7) Gecko/20060909 Firefox
1.5.0.7
Accept: video/*,text/xml,application/xml,application/xhtml+xml,text/html;q=0.9,text/plain;q=0.8, \
image/png,image/jpeg,multipart/attached
Accept-Language: en-us,en;q=0.5
Accept-Encoding: gzip,deflate
Accept-Charset: ISO-8859-l,utf-8;q=0.7,*;q=0.7
Keep-Alive: 300
Connection: keep-alive
Cookie: sessionid=AF13BOC
```

1008b

1006b

Fig. 10b

1012c

1000c

```
HTTP/l.l 200 OK
Date: Wed, 08 Sep 200417:32:31 GMT
Server: Apache/1.3.27 (Unix) (Red-Hat!Linux) PHP/4.1.2
Last-Modified: Wed, 08 Sep 2004 17:02:40 GMT
Content-Length: ???
MIME-Version: 1.0
Content-Type: multipart/attached; boundary="unique----------"

Returned in order
 --unique----------
Content-Type: text/plain

Title=”My Short Clip”, Director=”J D Director”, Producer=”P J Producer”, ….

 --unique----------
Content-Type: video/wav Content-Transfer-Encoding: base64

PGh0bWw+CiAgPGhlYWQ+CiAgPC9oZWFkPgoglDxib2R5PgoglCAgPHA+VGhpcy
Ym9keSBvZiB0aGUgbWVzc2FnZS48L3A+CiAgPC9ib2R5Pgo8L2h0bWw+Cg==
-- --unique----------
```

1014c

1004c

1006c

1008c

1010c

Fig.10c

1104a 1102a

```
POST-ATTACH www.otherSite.net/path/formHandler.cgi HTTP/l.I
Host: finance.myExample.us.com
User-Agent: Mozilla/5.0 (Windows; U; Windows NT 5.1; en-US; rv: 1.8.0.7) Gecko/
20060909 Firefox 1.5.0.7
Accept: text/xml,application/xml,application/xhtml+xml,text/html;q=0.9,text/
plain;q=0.8,  \
image/png,image/jpeg
Accept-Language: en-us,en;q=0.5
Accept-Encoding: gzip,deflate
Accept-Charset: ISO-8859-I,utf-8;q=0.7,*;q=0.7
Keep-Alive: 300
Connection: keep-alive
Cookie: sessionid=AF13BOC, [attach=07bf3c7de]
Attach- ok | yes | no; correlator=07bf3c7de
Content-Type: application/x-www-form-urlencoded
Content-Length: 32

home=Cosby&favorite+flavor=flies
```

1100a 1108a 1110a 1106a

Fig. 11a

1104b

```
HTTP/l.l 299 Attach
Date: Wed, 08 Sep 200417:32:31 GMT
Server: Apache/1.3.27 (Unix) (Red-Hat!Linux) PHP/4.1.2
Last-Modified: Wed, 08 Sep 2004 17:02:40 GMT
Cookie: sessionid=AF13BOC, attach=07bf3c7de
Attach:  Yes;correlator-07bf3c7de
```

1100b 1108b 1106b

Fig. 11b

1112c

HTTP/l.l 200 OK
Date: Wed, 08 Sep 200417:32:31 GMT
Server: Apache/1.3.27 (Unix) (Red-Hat!Linux) PHP/4.1.2
Last-Modified: Wed, 08 Sep 2004 17:02:40 GMT
Cookie: sessionid=AF13BOC
Content-Length: ???
MIME-Version: 1.0 Content-Type: multipart/mixed; boundary=unique-boundary-1

1100c

--unique-boundary-1

1108c

... Second command response t …

1110c

--unique-boundary-1
Content-type: text/plain; charset=US-ASCII
Attach: Complete; correlator-07bf3c7de
Status-Code=200
Cookie: [attach=07bf3c7de]

1104c

….Attached command response identified by correlator

1106c

--unique-boundary-1

Fig. 11c

PTO/SB/01A (01-09)
Approved for use through 06/30/2010. OMB 0651-0032
U.S. Patent and Trademark Office; U.S. DEPARTMENT OF COMMERCE
Under the Paperwork Reduction Act of 1995, no persons are required to respond to a collection of information unless it displays a valid OMB control number.

DECLARATION (37 CFR 1.63) FOR UTILITY OR DESIGN APPLICATION USING AN APPLICATION DATA SHEET (37 CFR 1.76)

Title of Invention	METHODS, SYSTEMS, AND COMPUTER PROGRAM PRODUCTS FOR PROCESSING AN ATTACHED COMMAND RESPONSE BASED ON A MARKUP ELEMENT

As the below named inventor(s), I/we declare that:

This declaration is directed to:

☒ The attached application, or

☐ Application No. _____ filed on _____

☐ As amended on _____ (if applicable);

I/we believe that I/we am/are the original and first inventor(s) of the subject matter which is claimed and for which a patent is sought;

I/we have reviewed and understand the contents of the above-identified application, including the claims, as amended by any amendment specifically referred to above;

I/we acknowledge the duty to disclose to the United States Patent and Trademark Office all information known to me/us to be material to patentability as defined in 37 CFR 1.56, including for continuation-in-part applications, material information which became available between the filing date of the prior application and the national or PCT International filing date of the continuation-in-part application.

WARNING:

Petitioner/applicant is cautioned to avoid submitting personal information in documents filed in a patent application that may contribute to identity theft. Personal information such as social security numbers, bank account numbers, or credit card numbers (other than a check or credit card authorization form PTO-2038 submitted for payment purposes) is never required by the USPTO to support a petition or an application. If this type of personal information is included in documents submitted to the USPTO, petitioners/applicants should consider redacting such personal information from the documents before submitting them to the USPTO. Petitioner/applicant is advised that the record of a patent application is available to the public after publication of the application (unless a non-publication request in compliance with 37 CFR 1.213(a) is made in the application) or issuance of a patent. Furthermore, the record from an abandoned application may also be available to the public if the application is referenced in a published application or an issued patent (see 37 CFR 1.14). Checks and credit card authorization forms PTO-2038 submitted for payment purposes are not retained in the application file and therefore are not publicly available.

All statements made herein of my/our own knowledge are true, all statements made herein on information and belief are believed to be true, and further that these statements were made with the knowledge that willful false statements and the like are punishable by fine or imprisonment, or both, under 18 U.S.C. 1001, and may jeopardize the validity of the application or any patent issuing thereon.

FULL NAME OF INVENTOR(S)

Inventor one: Robert Paul Morris Date: 2010/05/28

Signature: /Robert Paul Morris/ Citizen of: US

Inventor two: _____ Date: _____

Signature: _____ Citizen of: _____

☐ Additional inventors or a legal representative are being named on _____ additional form(s) attached hereto.

This collection of information is required by 35 U.S.C. 115 and 37 CFR 1.63. The information is required to obtain or retain a benefit by the public which is to file (and by the USPTO to process) an application. Confidentiality is governed by 35 U.S.C. 122 and 37 CFR 1.11 and 1.14. This collection is estimated to take 1 minute to complete, including gathering, preparing, and submitting the completed application form to the USPTO. Time will vary depending upon the individual case. Any comments on the amount of time you require to complete this form and/or suggestions for reducing this burden, should be sent to the Chief Information Officer, U.S. Patent and Trademark Office, U.S. Department of Commerce, P.O. Box 1450, Alexandria, VA 22313-1450. DO NOT SEND FEES OR COMPLETED FORMS TO THIS ADDRESS. **SEND TO: Commissioner for Patents, P.O. Box 1450, Alexandria, VA 22313-1450.**

If you need assistance in completing the form, call 1-800-PTO-9199 and select option 2.

Privacy Act Statement

The **Privacy Act of 1974 (P.L. 93-579)** requires that you be given certain information in connection with your submission of the attached form related to a patent application or patent. Accordingly, pursuant to the requirements of the Act, please be advised that: (1) the general authority for the collection of this information is 35 U.S.C. 2(b)(2); (2) furnishing of the information solicited is voluntary; and (3) the principal purpose for which the information is used by the U.S. Patent and Trademark Office is to process and/or examine your submission related to a patent application or patent. If you do not furnish the requested information, the U.S. Patent and Trademark Office may not be able to process and/or examine your submission, which may result in termination of proceedings or abandonment of the application or expiration of the patent.

The information provided by you in this form will be subject to the following routine uses:

1. The information on this form will be treated confidentially to the extent allowed under the Freedom of Information Act (5 U.S.C. 552) and the Privacy Act (5 U.S.C 552a). Records from this system of records may be disclosed to the Department of Justice to determine whether disclosure of these records is required by the Freedom of Information Act.
2. A record from this system of records may be disclosed, as a routine use, in the course of presenting evidence to a court, magistrate, or administrative tribunal, including disclosures to opposing counsel in the course of settlement negotiations.
3. A record in this system of records may be disclosed, as a routine use, to a Member of Congress submitting a request involving an individual, to whom the record pertains, when the individual has requested assistance from the Member with respect to the subject matter of the record.
4. A record in this system of records may be disclosed, as a routine use, to a contractor of the Agency having need for the information in order to perform a contract. Recipients of information shall be required to comply with the requirements of the Privacy Act of 1974, as amended, pursuant to 5 U.S.C. 552a(m).
5. A record related to an International Application filed under the Patent Cooperation Treaty in this system of records may be disclosed, as a routine use, to the International Bureau of the World Intellectual Property Organization, pursuant to the Patent Cooperation Treaty.
6. A record in this system of records may be disclosed, as a routine use, to another federal agency for purposes of National Security review (35 U.S.C. 181) and for review pursuant to the Atomic Energy Act (42 U.S.C. 218(c)).
7. A record from this system of records may be disclosed, as a routine use, to the Administrator, General Services, or his/her designee, during an inspection of records conducted by GSA as part of that agency's responsibility to recommend improvements in records management practices and programs, under authority of 44 U.S.C. 2904 and 2906. Such disclosure shall be made in accordance with the GSA regulations governing inspection of records for this purpose, and any other relevant (*i.e.*, GSA or Commerce) directive. Such disclosure shall not be used to make determinations about individuals.
8. A record from this system of records may be disclosed, as a routine use, to the public after either publication of the application pursuant to 35 U.S.C. 122(b) or issuance of a patent pursuant to 35 U.S.C. 151. Further, a record may be disclosed, subject to the limitations of 37 CFR 1.14, as a routine use, to the public if the record was filed in an application which became abandoned or in which the proceedings were terminated and which application is referenced by either a published application, an application open to public inspection or an issued patent.
9. A record from this system of records may be disclosed, as a routine use, to a Federal, State, or local law enforcement agency, if the USPTO becomes aware of a violation or potential violation of law or regulation.

METHODS, SYSTEMS, AND COMPUTER PROGRAM PRODUCTS FOR PROCESSING AN ATTACHED COMMAND RESPONSE BASED ON A MARKUP ELEMENT

RELATED APPLICATIONS

[0001] This application is related to the following commonly owned U.S. Patent Applications, the entire disclosure of each being incorporated by reference herein: Application No. 12/788,364 (Docket No 0103) filed on 2010/05/27, entitled "Methods, Systems, and Program Products for Processing an Attached Command Response";

[0002] Application No. 12/788,373 (Docket No 0131) filed on 2010/05/27, entitled "Methods, Systems, and Program Products for Preventing Processing of an HTTP Response";

[0003] Application No. __/___,___ (Docket No 0148) filed on 2010/05/28, entitled "Methods, Systems, and Program Products for Processing a Non-returnable Command Response Based on a Markup Element";

[0004] Application No. 12/788,381 (Docket No 0150) filed on 2010/05/27, entitled "Methods, Systems, and Program Products for Processing a Combined Command Response"; and

[0005] Application No. __/___,___ (Docket No 0152) filed on 2010/05/28, entitled "Methods, Systems, and Program Products for Processing a Combined Command Response Based on a Markup Element".

BACKGROUND

[0006] The protocol of the Web, Hypertext Transfer Protocol (HTTP), is a request/response protocol. Browser markup languages, such as hypertext markup language (HTML), are designed to work with the request/response model of HTTP. More particularly, for each HTTP request there is a single HTTP response, unless an error occurs preventing generation and/or return of the response to the requesting user agent. HTTP requests and HTTP responses are communicated over a network connection. Multiple pairs of HTTP request and HTTP response messages can be exchanged over a single connection. HTTP responses must be returned via the connection in the order that their corresponding HTTP requests were exchanged via the connection.

[0007] An HTTP request that takes a relatively long time to perform or process by a server holds up HTTP responses to any HTTP requests received afterwards. Depending on the implementation of a particular server, the long-running HTTP request can prevent the particular server from beginning to perform commands identified in any later sent HTTP requests.

[0008] HTTP is used by web browsers that interact with people. Delays in responding can be frustrating to people. This frustration may be costly to website providers as users sometimes resubmit requests, wasting the resources of a service provider. Possibly worse, some users move on to another service provider or other activity.

[0009] The issues discussed above are exemplary issues associated with the current request/response model of the Web. Accordingly, there exists a need for methods, systems, and computer program products for processing an attached command response based on a markup element.

SUMMARY

[0010] The following presents a simplified summary of the disclosure in order to provide a basic understanding to the reader. This summary is not an extensive overview of the disclosure and it does not identify key/critical elements of the invention or delineate the scope of the invention. Its sole purpose is to present some concepts disclosed herein in a simplified form as a prelude to the more detailed description that is presented later.

[0011] Methods and systems are described for processing an attached command response based on a markup element. In one aspect, the method includes sending, via a network to a user agent node, a first resource including a first attach markup element. The method further includes receiving a first request message identifying a first command and receiving a second request message identifying a second command, wherein, based on the first attach markup element, at least one of the first request message includes first attach-request information and the second request message includes second attach-request information. The method still further includes determining at least one of that a first command response to the first command is an

attachable command response based on the first attach-request information and that a second response message to the second request message is an attachable response message based on the second attach-request information. The method additionally includes, in response to the determination, sending, to the user agent node in the second response message, an attached command response including at least a portion of the first command response.

[0012] Further, a system for processing an attached command response based on a markup element is described. The system includes an execution environment including an instruction-processing unit configured to process an instruction included in at least one of a resource generator component, a request-in component, an attach director component, and a response-out component. The system includes the resource generator component configured for sending, via a network to a user agent node, a first resource including a first attach markup element. The system further includes the request-in component configured for receiving a first request message identifying a first command and receiving a second request message identifying a second command, wherein, based on the first attach markup element, at least one of the first request message includes first attach-request information and the second request message includes second attach-request information. The system still further includes the attach director component configured for determining at least one of that a first command response to the first command is an attachable command response based on the first attach-request information and that a second response message to the second request message is an attachable response message based on the second attach-request

information. The system also includes the response-out component configured for, in response to the determination, sending, to the user agent node in the second response message, an attached command response including at least a portion of the first command response.

[0013] In another aspect, a method for processing an attached command response based on a markup element is described that includes receiving, via a network from a server node, a first resource including a first attach markup element. The method further includes sending a first request message identifying a first command and sending a second request message identifying a second command, wherein, based on the first attach markup element, at least one the first request message includes first attach-request information and the second request message includes second attach-request information. The method still further includes, in response to sending at least one of the first attach-request information and the second attach-request information, receiving, in a second response message to the second request message, an attached command response including at least a portion of a first command response for the first command.

[0014] Still further, a system for processing an attached command response based on a markup element is described. The system includes an execution environment including an instruction-processing unit configured to process an instruction included in at least one of a markup content handler component, a request-out component, and an attached response component. The system includes the markup content handler component configured for receiving, via a network from a server node, a first resource

including a first attach markup element. The system further includes the request-out component configured for sending a first request message identifying a first command and sending a second request message identifying a second command, wherein, based on the first attach markup element, at least one the first request message includes first attach-request information and the second request message includes second attach-request information. The system still further includes the attached response component configured for, in response to sending at least one of the first attach-request information and the second attach-request information, receiving, in a second response message to the second request message, an attached command response including at least a portion of a first command response for the first command.

BRIEF DESCRIPTION OF THE DRAWINGS

[0015] Objects and advantages of the present invention will become apparent to those skilled in the art upon reading this description in conjunction with the accompanying drawings, in which like reference numerals have been used to designate like or analogous elements, and in which:

[0016] Fig. 1 is a block diagram illustrating an exemplary hardware device included in and/or otherwise providing an execution environment in which the subject matter may be implemented;

[0017] Fig. 2a is a flow diagram illustrating a method for processing an attached command response based on a markup element according to an aspect of the subject matter described herein;

[0018] Fig. 2b is a flow diagram illustrating a method for processing an attached command response based on a markup element according to an aspect of the subject matter described herein;

[0019] Fig. 3a is a block diagram illustrating an arrangement of components for processing an attached command response based on a markup element according to another aspect of the subject matter described herein;

[0020] Fig. 3b is a block diagram illustrating an arrangement of components for processing an attached command response based on a markup element according to another aspect of the subject matter described herein;

[0021] Fig. 4 is a block diagram illustrating an arrangement of components for processing an attached command response based on a markup element according to another aspect of the subject matter described herein;

[0022] Fig. 5 is a block diagram illustrating an arrangement of components for processing an attached command response based on a markup element according to another aspect of the subject matter described herein;

[0023] Fig. 6 is a network diagram illustrating an exemplary system for processing an attached command response based on a markup element according to an aspect of the subject matter described herein;

[0024] Fig. 7 is a diagram illustrating a user interface presented via a display according to an aspect of the subject matter described herein;

[0025] Fig. 8 is a message flow diagram illustrating a message flow in a system for processing an attached command response based on a markup element according to an aspect of the subject matter described herein;

[0026] Fig. 9a illustrates markup information including an exemplary markup element according to the subject matter described herein;

[0027] Fig. 9b illustrates markup information including an exemplary markup element according to the subject matter described herein;

[0028] Fig. 9c illustrates markup information including an exemplary markup element according to the subject matter described herein;

[0029] Fig. 9d illustrates markup information including an exemplary markup element according to the subject matter described herein;

[0030] Fig. 10a illustrates an exemplary request message according to an aspect of the subject matter described herein;

[0031] Fig. 10b illustrates an exemplary request message according to an aspect of the subject matter described herein;

[0032] Fig. 10c illustrates an exemplary response message according to an aspect of the subject matter described herein;

[0033] Fig. 11a Illustrates an exemplary request message according to an aspect of the subject matter described herein; and

[0034] Fig. 11b Illustrates an exemplary response message according to an aspect of the subject matter described herein; and

[0035] Fig. 11b illustrates an exemplary response message according to an aspect of the subject matter described herein.

DETAILED DESCRIPTION

[0036] One or more aspects of the disclosure are described with reference to the drawings, wherein like reference numerals are generally utilized to refer to like elements throughout, and wherein the various structures are not necessarily drawn to scale. In the following description, for purposes of explanation, numerous specific details are set forth in order to provide a thorough understanding of one or more aspects of the disclosure. It may be evident, however, to one skilled in the art that one or more aspects of the disclosure may be practiced with a lesser degree of these specific details. In other instances, well-known structures and devices are shown in block diagram form in order to facilitate describing one or more aspects of the disclosure.

[0037] An exemplary device included in an execution environment that may be configured according to the subject matter is illustrated in Fig. 1. An execution environment includes an arrangement of hardware and, optionally, software that may be further configured to include an arrangement of components for performing a method of

the subject matter described herein. An execution environment includes and/or is otherwise provided by one or more devices. An execution environment may include a virtual execution environment including software components operating in a host execution environment. Exemplary devices included in or otherwise providing suitable execution environments for configuring according to the subject matter include personal computers, notebook computers, tablet computers, servers, hand-held and other mobile devices, multiprocessor devices, distributed devices, consumer electronic devices, and/or other network-enabled devices. Those skilled in the art will understand that the components illustrated in Fig. 1 are exemplary and may vary by particular execution environment.

[0038] Fig. 1 illustrates hardware device **100** included in execution environment **102**. Fig. 1 illustrates that execution environment **102** includes instruction-processing unit (IPU) **104**, such as one or more microprocessors; physical processor memory **106** including storage locations identified by addresses in a physical memory address space of IPU **104;** persistent secondary storage **108**, such as one or more hard drives and/or flash storage media; input device adapter **110**, such as a key or keypad hardware, a keyboard adapter, and/or a mouse adapter; output device adapter **112**, such as a display or audio adapter for presenting information to a user; a network interface component, illustrated by network interface adapter **114,** for communicating via a network such as a LAN and/or WAN; and a communication mechanism that couples elements **104-114**, illustrated as bus **116**. Elements **104-114** may be operatively

coupled by various means. Bus **116** may comprise any type of bus architecture, including a memory bus, a peripheral bus, a local bus, and/or a switching fabric.

[0039] IPU **104** is an instruction execution machine, apparatus, or device. Exemplary IPUs include one or more microprocessors, digital signal processors (DSPs), graphics processing units, application-specific integrated circuits (ASICs), and/or field programmable gate arrays (FPGAs). In the description of the subject matter herein, the terms “IPU” and “processor” are used interchangeably. IPU **104** may access machine code instructions and data via one or more memory address spaces in addition to the physical memory address space. A memory address space includes addresses identifying locations in a processor memory. The addresses in a memory address space are included in defining a processor memory. IPU **104** may have more than one processor memory. Thus, IPU **104** may have more than one memory address space. IPU **104** may access a location in a processor memory by processing an address identifying the location. The processed address may be in an operand of a machine code instruction and/or may be identified in a register or other portion of IPU **104**.

[0040] Fig. 1 illustrates virtual processor memory **118** spanning at least part of physical processor memory **106** and at least part of persistent secondary storage **108**. Virtual memory addresses in a memory address space may be mapped to physical memory addresses identifying locations in physical processor memory **106**. An address space for identifying locations in a virtual processor memory is referred to as a virtual memory address space; its addresses are referred to as virtual memory addresses; and its

processor memory is known as a virtual processor memory or virtual memory. The term "processor memory" may refer to physical processor memory **106** and/or virtual processor memory **118** depending on the context in which the term is used.

[0041] Physical processor memory **106** may include various types of memory technologies. Exemplary memory technologies include static random access memory (SRAM) and/or dynamic RAM (DRAM) including variants such as dual data rate synchronous DRAM (DDR SDRAM), error correcting code synchronous DRAM (ECC SDRAM), and/or RAMBUS DRAM (RDRAM). Physical processor memory **106** may include volatile memory as illustrated in the previous sentence and/or may include nonvolatile memory such as nonvolatile flash RAM (NVRAM) and/or ROM.

[0042] Persistent secondary storage **108** may include one or more flash memory storage devices, one or more hard disk drives, one or more magnetic disk drives, and/or one or more optical disk drives. Persistent secondary storage may include removable media. The drives and their associated computer-readable storage media provide volatile and/or nonvolatile storage for computer readable instructions, data structures, program components, and other data for execution environment **102**.

[0043] Execution environment **102** may include software components stored in persistent secondary storage **108**, in remote storage accessible via a network, and/or in a processor memory. Fig. 1 illustrates execution environment **102** including operating system **120**, one or more applications **122**, and other program code and/or data components illustrated by other libraries and subsystems **124**. In an aspect, some or all

software components may be stored in locations accessed by IPU **104** in a shared memory address space shared by the software components. The software components accessed via the shared memory address space are stored in a shared processor memory defined by the shared memory address space. In another aspect, a first software component may be stored in one or more locations accessed by IPU **104** in a first address space and a second software component may be stored in one or more locations accessed by IPU **104** in a second address space. The first software component is stored in a first processor memory defined by the first address space and the second software component is stored in a second processor memory defined by the second address space.

[0044] Software components typically include instructions executed by IPU **104** in a context referred to as a "process". A process may include one or more "threads". A thread includes a sequence of instructions executed by IPU **104** in a thread context. The terms "thread" and "process" may be used interchangeably herein when a process includes only one thread.

[0045] Execution environment **102** may receive user-provided information via one or more input devices illustrated by input device **128**. Input device **128** provides input information to other components in execution environment **102** via input device adapter **110**. Execution environment **102** may include an input device adapter for a keyboard, a touch screen, a microphone, a joystick, a television receiver, a video camera, a still

camera, a document scanner, a fax, a phone, a modem, a network interface adapter, and/or a pointing device, to name a few exemplary input devices.

[0046] Input device **128** included in execution environment **102** may be included in device **100** as Fig. 1 illustrates or may be external (not shown) to device **100**. Execution environment **102** may include one or more internal and/or external input devices. External input devices may be connected to device **100** via corresponding communication interfaces such as a serial port, a parallel port, and/or a universal serial bus (USB) port. Input device adapter **110** receives input and provides a representation to bus **116** to be received by IPU **104**, physical processor memory **106**, and/or other components included in execution environment **102**.

[0047] Output device **130** in Fig. 1 exemplifies one or more output devices that may be included in and/or may be external to and operatively coupled to device **100**. For example, output device **130** is illustrated connected to bus **116** via output device adapter **112**. Output device **130** may be a display device. Exemplary display devices include liquid crystal displays (LCDs), light emitting diode (LED) displays, and projectors. Output device **130** presents output of execution environment **102** to one or more users. In some embodiments, an input device may also include an output device. Examples include a phone, a joystick, and/or a touch screen. In addition to various types of display devices, exemplary output devices include printers, speakers, tactile output devices such as motion producing devices, and other output devices producing sensory information detectable by a user.

[0048] A device included in or otherwise providing an execution environment may operate in a networked environment communicating with one or more devices via one or more network interface components. The terms “communication interface component” and “network interface component” are used interchangeably. Fig. 1 illustrates network interface adapter (NIA) **114** as a network interface component included in execution environment **102** to operatively couple device **100** to a network. A network interface component includes a network interface hardware (NIH) component and optionally a software component. The terms “network node” and “node” in this document both refer to a device having a network interface component for operatively coupling the device to a network. The terms “device” and “node” as used herein refer to one or more devices and nodes, respectively, providing and/or otherwise included in an execution environment unless clearly indicated otherwise.

[0049] Exemplary network interface components include network interface controller components, network interface cards, network interface adapters, and line cards. A node may include one or more network interface components to interoperate with a wired network and/or a wireless network. Exemplary wireless networks include a BLUETOOTH network, a wireless 802.11 network, and/or a wireless telephony network (e.g., a cellular, PCS, CDMA, and/or GSM network). Exemplary network interface components for wired networks include Ethernet adapters, Token-ring adapters, FDDI adapters, asynchronous transfer mode (ATM) adapters, and modems of various types. Exemplary wired and/or wireless networks include various types of LANs, WANs, and/or

personal area networks (PANs). Exemplary networks also include intranets and internets such as the Internet.

[0050] The Hypertext Transfer Protocol (HTTP) is specified in "Request for Comments" (RFC) document RFC 2616 by R. Fielding, et al., titled "Hypertext Transfer Protocol – HTTP/1.1" (June 1999). Terms from RFC 2616 are defined below as used herein and are used in describing the subject matter in this document.

[0051] The terms “user agent” and “server” refer to roles played by one or more components and/or devices operating in an execution environment, and/or systems in a network communication. A “user agent” initiates and/or sends a command in a request message. A “server” accepts a command identified in a request message in order to process the command. The terms “server”, “service”, and “service provider” are used interchangeably herein. Processing a command includes performing and/or otherwise providing for performing the command. The performing of the command may be successful or unsuccessful. As defined and described herein a server may send information, via a response message, to a user agent in response to receiving a command from the user agent, via a request message.

[0052] A “request message” as defined herein is a network message that is initiated, send-able, or sent by a node, including a user agent, for receiving by a node including a server. A node or execution environment including a component operating in a user agent role is referred to herein as a “user agent node”. A node or execution environment including a component operating in a server role is referred to herein as a “server node”.

A request message identifies a command for processing by a server operating in a server node. An HTTP request is an exemplary request message. “HTTP request” is defined in section 5 of RFC 2616 along with adaptations and/or extensions described below.

[0053] A “response message” is a network message sent as a response to a particular request message sent by a server node to the user agent node that sent the particular “request message”. The response message may include a “command response” as a response to a command identified in the particular request message. An “HTTP response” is an example of a “response message” to a particular HTTP request. “HTTP response” is defined in section 6 of RFC 2616 along with adaptations and/or extensions described below.

[0054] A “resource” is a data object or service that can be identified by a universal resource identifier (URI). A “message entity” is information transferred as payload of a network message. An “HTTP entity” is information transferred as payload of an HTTP request or an HTTP response. The term “HTTP entity” as used herein is defined as the term “entity” is defined in RFC 2616. An HTTP entity includes of meta-information in the form of entity-header fields and content in the form of an entity-body. An “HTTP representation” is an HTTP entity that is subject to content negotiation. The term “HTTP representation” is used herein as the term “representation” is used and defined in RFC 2616.

[0055] A command identified in a request message may be processed by a service provider. For example, a service provider may retrieve and/or generate a resource in processing a command. As used herein, a "command response" is a result produced in processing a command, from a user agent, identified in a request message. The command response is produced to return to the user agent. A command response is returned in a response message.

[0056] The block diagram in Fig. 3a illustrates an exemplary system for processing an attached command response based on a markup element according to the method illustrated in Fig. 2a. A system for performing the method illustrated in Fig. 2a includes an execution environment, including an instruction-processing unit, configured to process an instruction included in at least one of a resource generator component **350**, a request-in component **352**, an attach director component **354**, and a response-out component **356** illustrated in Fig 3a. Some or all of the exemplary components illustrated in Fig. 3a may be adapted for performing the method illustrated in Fig. 2a in a number of execution environments. Fig. 5 is a block diagram illustrating the components of Fig. 3a and/or analogs of the components of Fig. 3a adapted for operation in execution environment **502** including or otherwise provided by one or more nodes.

[0057] The block diagram in Fig. 3b illustrates an exemplary system for processing an attached command response based on a markup element according the method illustrated in Fig. 2b. A system for performing the method illustrated in Fig. 2b includes an execution environment, including an instruction-processing unit, configured to

process an instruction in at least one of a markup content handler component **360**, a request-out component **362**, and an attached response component **364** illustrated in Fig 3b. Some or all of the exemplary components illustrated in Fig. 3b may be adapted for performing the method illustrated in Fig. 2b in a number of execution environments. Fig. 4 is a block diagram illustrating the components of Fig. 3b and/or analogs of the components of Fig. 3b adapted for operation in execution environment **402** including or otherwise provided by one or more nodes.

[0058] Fig. 1 illustrates components of an exemplary device that may at least partially provide and/or otherwise be included in an execution environment. The components illustrated in Fig. 4 and Fig. 5 may be included in or otherwise combined with the components of Fig. 1 to create a variety of arrangements of components according to the subject matter described herein.

[0059] Fig. 6 illustrates user agent node **602** and server node **604** as exemplary devices included in and/or otherwise adapted for providing execution environment **402** and execution environment **502**, respectively. As illustrated in Fig. 6, user agent node **602** and server node **604** are operatively coupled to network **606** via respective network interface components enabling user agent node **602** and server node **604** to communicate.

[0060] Fig. 4 illustrates execution environment **402** hosting a web browsing application illustrated as browser **404**. It is common for a browser and/or a web application agent operating in a browser to operate as user agents. Fig. 4 illustrates browser **404**

including an adaptation of the arrangement of components in Fig. 3b. Web application agent **406** is illustrated operating in browser **404** and may be received from a remote application provider, such as web application **504** in Fig. 5. Browser **404** and execution environment **402** may provide at least part of an execution environment for web application agent **406.** As defined herein, either or all of browser **404**, web application agent **406**, HTTP layer **410**, and user agent node **602** may operate in the role of user agent and/or include a component operating as a user agent. Fig. 5 illustrates execution environment **502** hosting web application **504**, typically operating in the role of a server in a message exchange. Fig. 5 illustrates an adaptation of the arrangement of components in Fig. 3a operating in web application **504.**

[0061] As stated, the various adaptations of the arrangements in Fig. 3a and in Fig. 3b are not exhaustive. For example, those skilled in the art will see based on the description herein that arrangements of components for performing the methods illustrated in Fig. 2a and Fig. 2b may be distributed across more than one node and/or execution environment. For example, such an arrangement may operate at least partially in browser **404** in Fig. 4 and at least partially in execution environment **502** in Fig. 5.

[0062] Fig. 4 illustrates network stack **408** configured for sending and receiving messages over network **606** in Fig. 6, such as the Internet, via a network interface component of user agent node **602**. Fig. 5 illustrates a network application platform **506** providing services to one or more web applications. Fig. 5 also illustrates network

application platform **506** configured for interoperating with network stack **508**. Network stack **408** and network stack **508** may support the same protocol suite, such as TCP/IP, or may communicate via a network gateway or other protocol translation device and/or service. Browser **404** in Fig. 4 and network application platform **506** in Fig. 5 may interoperate via their respective network stacks. Browser **404** and web application **504** may communicate via one or more application layer protocols. Fig. 4 illustrates HTTP layer **410** exemplifying an application layer protocol. Fig. 5 illustrates a compatible HTTP protocol layer as HTTP layer **510**.

[0063] Browser **404**, in Fig. 4, may receive some or all of web application agent **406** as a resource in one more messages sent from web application **504**, in Fig. 5, via network application platform **506**, network stacks, network interface components, and optionally HTTP layers in the respective execution environments. In Fig. 4, browser **404** includes content manager component **412**. Content manager component **412** may interoperate with HTTP layer component **410** and/or network stack **408** to receive the message or messages including some or all of web application agent **406**.

[0064] Web application agent **406** may include one or more resources, such as a web page or other data representation for presenting a user interface for web application **504**. Web application agent **406** may include and/or reference data represented in one or more formats including hypertext markup language (HTML) and/or other markup language, ECMAScript or other scripting language, byte code, image data, audio data,

and/or machine code to name just a few valid presentable data representations depending on the capabilities of a receiving user agent node.

[0065] In response to a request message identifying a command received from browser **404**, controller component **512**, in Fig 5, may invoke model subsystem **514** to perform command specific processing. Model subsystem **514** may include any number of command processors, illustrated as command handler components **516**, for dynamically generating data and/or retrieving data from model database **518** based on the command. Controller component **512** may further invoke one or more response generator components **530** included in generating a command response for the received command, which may include a user interface for presenting to a user of browser **404**. The one or more response generator components **530** may invoke template engine component **522** to identify one or more templates and/or other static data to combine with data received from command handler component(s) **516** generated in processing the command. Fig. 5 illustrates template database **524** including an exemplary template **526**. The one or more response generator component(s) **530** in view subsystem **528** may interoperate with response-out component **556** in controller component **512** to return the command response generated from processing a command in a response message. The command response may be returned in one or more data formats suitable for a user agent, such as browser **404**. Response-out component **556** may receive data from one or more response generator components **530** as one or more message entities, such as an HTTP entity that may include an HTTP representation. Alternatively or additionally,

response-out component **556** may transform data from one or more response generator component(s) **530** into one or more message entities. Response-out component **556** may send the one or more message entities in a response message, in response to the request message received from browser **404**. Some or all of web application agent **406** may be sent to browser **404** via network application platform **506** in the manner described.

[0066] One or more response messages including one or more data representations of some or all of web application agent **406** may be received by content manager component **412** via HTTP layer **410** and network stack **408**. In Fig. 4, browser **404** includes one or more content handler components **414** to process data received in message entities, such as HTTP representations, according to their data type. A data type may be identified by a MIME type identifier. Exemplary content handler components **414** include a text/html content handler component for processing HTML representations; an application/xmpp-xml content handler component for processing XMPP streams including presence tuples, instant messages, and publish-subscribe data as defined by various XMPP specifications; one or more video content handler components for processing video representations of various types; and still image data content handler components for processing various image data representations. Content handler component(s) **414** process received HTTP representations and may provide data from the HTTP representations to one or more user interface element handler components **416**.

[0067] User interface element handler components **416** are illustrated in presentation controller component **418** in Fig. 4. Presentation controller component **418** may manage visual, audio, and other types of output for its including application as well as receive and route detected user and other inputs to components and extensions of its including application, browser **404**. With respect to Fig. 4, a user interface element handler component **416** may be adapted to operate at least partially in a content handler component **414** such as a text/html content handler component and/or a script content handler component. Additionally or alternatively, a user interface element handler component in execution environment **402** may operate in web application agent **406** and/or other extension of its including application, such as a plug-in providing a virtual machine for script and/or byte code.

[0068] Fig. 7 illustrates a presentation space **702** of a display device, such as output device **130** in Fig. 1, including first browser window **704a** of browser **404**, web application agent **406**, and/or web application **504**. Fig. 7 is used to illustrate various exemplary visual components of one or more of browser **404**, web application agent **406**, and web application **504**.

[0069] The components of a user interface are generically referred to herein as user interface elements. More specifically, visual components of a user interface are referred to herein as visual interface elements. A visual interface element may be a visual component of a graphical user interface (GUI). Exemplary visual interface elements include windows, textboxes, sliders, list boxes, drop-down lists, spinners, various types

of menus, toolbars, ribbons, combo boxes, tree views, grid views, navigation tabs, scrollbars, labels, tooltips, text in various fonts, balloons, dialog boxes, and various types of button controls including check boxes and radio buttons. An application interface may include one or more of the exemplary elements listed. Those skilled in the art will understand that this list is not exhaustive. The terms “visual representation”, “visual component”, and “visual interface element” are used interchangeably in this document. Other types of user interface elements include audio output components referred to as audio interface elements, tactile output components referred to as tactile interface elements, and the like.

[0070] A “user interface (UI) element handler” component, as the term is used in this document, includes a component configured to send information representing a program entity for presenting a user detectable representation of the program entity by an output device, such as a display. A “program entity” is an object included in and/or otherwise processed by an application or executable program component. The user detectable representation is presented based on the sent information. The sent information is referred to herein as “presentation information”. Presentation information may include data in one or more formats including image formats such as JPEG, video formats such as MP4, markup language data such as HTML and other markup based languages, and/or instructions such as those defined by various script languages, byte code, and/or machine code. For example, a web page received by a browser from a remote application provider may include HTML, ECMAScript, and/or byte code for presenting one or more user interface elements included in a user interface of the

remote application. Components configured to send information representing one or more program entities for presenting particular types of output by particular types of output devices include visual interface elements, audio interface element handler components, tactile interface element handler components, and the like.

[0071] A representation of a program entity may be represented and/or otherwise maintained in a presentation space. As used in this document, the term “presentation space” refers to a storage region allocated and/or otherwise provided for storing presentation information, which may include audio, visual, tactile, and/or other sensory data for presentation by and/or on an output device. For example, a buffer for storing an image and/or text string may be a presentation space. A presentation space may be physically and/or logically contiguous or non-contiguous. A presentation space may have a virtual as well as a physical representation. A presentation space may include a storage location in processor memory, secondary storage, a memory of an output device adapter device, and/or a storage medium of an output device. A screen of a display, for example, is a presentation space.

[0072] As used herein, the terms "program", “program component”, “application”, “application component”, “executable” and "executable component" refer to any data representation that may be translated into a set of machine code instructions and optional associated program data. Thus, a program or executable may include an application, a shared or non-shared library, and a system command. Program representations other than machine code include object code, byte code, and source

code. Object code includes a set of instructions and/or data elements that either are prepared for linking prior to loading or are loaded into an execution environment. When in an execution environment, object code may include references resolved by a linker and/or may include one or more unresolved references. The context in which this term is used will make clear that state of the object code when it is relevant. This definition includes machine code and virtual machine code, such as Java™ byte code.

[0073] Returning to Fig. 7, first browser window **704a** and second browser window **704b** collectively and generically are referred to as browser window(s) **704**. Browser windows **704** illustrate a number of visual user interface elements commonly found in applications. Browser windows **704** include respective menu bars **706** with menu controls for receiving user input to identify commands to perform. Browser windows **704** also include respective user interface elements providing respective presentation spaces **708** for presenting content including other visual components.

[0074] Various user interface elements of browser **404**, web application agent **406**, and/or web application **504** described above may be presented by one or more user interface element handler components **416** and/or response generator components **530**. User interface element handler component(s) **416** in Fig. 4 may send presentation information representing a visual interface element(s), such as menu bar **706** illustrated in Fig. 7, to GUI subsystem **420**. GUI subsystem **420** may instruct graphics subsystem **422** to draw the visual interface element(s) in a region of display presentation space **702** in Fig. 7, based on the presentation information.

[0075] Input may be received via input driver **424** in Fig. 4. For example, a user may move a mouse to move a pointer presented in display presentation space **702** over an operation identifier in menu bar **706**. The user may provide an input detected by the mouse. The detected input may be received by GUI subsystem **420** via input driver **424** as an operation or command indicator based on the association of the shared location of the pointer and the operation identifier in display presentation space **702**.

[0076] A first command response for a first command identified in a first request message is referred to herein as “attachable” or as an “attachable command response” when at most a portion of the attachable command response is includable in a first response message to the first request message. The first response message may or may not be sent in various aspects. The attachable command response or a portion thereof is sent in a second response message to a second request message identifying a second command. The second response message includes at least a portion of the attachable command response. The attachable command response or portion thereof included in the second response message is herein referred to as “attached”, as an “attached command response”, and/or as included in an “attached command response”. The second response message is referred to herein as “attachable or as an “attachable response message” before it includes the attached command response. The second response message is referred to herein as “attached” or as an “attached response message” when it includes the attached command response and/or has been transmitted via a network while including the attached command response.

[0077] Note that an attached response message differs from a combined response message as defined and described in Application No. 12/788,381 (Docket No 0150) filed on 2010/05/27, entitled "Methods, Systems, and Program Products for Processing a Combined Command Response". A combined response message includes multiple command responses to commands identified in corresponding request messages. No response messages are sent that correspond only to any particular request message in the corresponding request messages as is allowed for commands having attachable command responses.

[0078] With reference to Fig. 2a, block **250** illustrates that the method includes sending, via a network to a user agent node, a first resource including a first attach markup element. Accordingly, a system for processing an attached command response based on a markup element includes means for sending, via a network to a user agent node, a first resource including a first attach markup element. For example, as illustrated in Fig. 3a, resource generator component **350** is configured for sending, via a network to a user agent node, a first resource including a first attach markup element. Fig. 5 illustrates resource generator component **550** as an adaptation of and/or analog of resource generator component **350** in Fig. 3a. One or more resource generator components **550** operate in execution environment **502**.

[0079] With reference to Fig. 2b, block **260** illustrates that the method includes receiving, via a network from a server node, a first resource including a first attach markup element. Accordingly, a system for processing an attached command response

based on a markup element includes means for receiving, via a network from a server node, a first resource including a first attach markup element. For example, as illustrated in Fig. 3b, the markup content handler component **360** is configured for receiving, via a network from a server node, a first resource including a first attach markup element. Fig. 4 illustrates markup content handler component **460** as an adaptation of and/or analog of markup content handler component **360** in Fig. 3b. One or more markup content handler components **460** operate in execution environment **402**.

[0080] A resource may be sent via a network in a message as illustrated by resource send message **806** in Fig. 8. Resource send message **806** may be sent in response to a change in the resource detected by server node **604** and/or in response to a request to access the resource. The resource may be sent in response to receiving a message via a network for changing and/or otherwise accessing the resource. Resource send message **806** is transmitted via network **606** according to a specified protocol. The protocol specified may include a request/response protocol, a publish-subscribe protocol, and/or an asynchronous protocol specifying a message transmitted asynchronously without a corresponding request or subscription.

[0081] When a resource is sent according to a request/response protocol specification, a request message for the resource may be sent by a user agent node and received by a server node. In accordance with the protocol, the resource may be sent by the server node in a response message to the request message for receiving by the user agent

node. Fig. 8 illustrates user agent node **602** sending a resource request message **804** according to a request/response protocol for receiving by server node **604**. In an aspect, HTTP may be the request/response protocol. Resource request message **804** may include an HTTP request including a URI identifying the resource and including an HTTP method token. The method token and the URI may be included in command information identifying a command for accessing the resource by the server and returning a representation of the resource in a command response in the response message. Resource send message **806** in Fig. 8 illustrates the response message in a request/response communication.

[0082] In another aspect, a resource may be sent in a notification message in response to receiving a change message including change information for creating and/or otherwise changing the resource. In Fig. 8, resource change message **802** may be a publish message including change information for updating the resource according to a publish-subscribe protocol. Resource change message **802** may be sent by change node **608** in Fig. 8 to server node **604**. In response to receiving the change information, server node **604** may send resource send message **806** as a notification message to user agent node **602** according to the publish-subscribe protocol. User agent node **602** may receive resource send message **806** based on a subscription to the resource or may receive the resource send message **806** as a directed-notify message without having a subscription for resource notification messages. A directed-notify message is an asynchronous message.

[0083] In still another aspect, a resource may be sent in response to an event other than receiving a message via a network. A server node may receive and/or otherwise detect change information indicating a change to a resource. In response to the change information, the resource may be sent asynchronously according to an asynchronous protocol. For example, server node **604** may detect a change to a resource via a system administrator through a user interface provided by server node **604**. Change information may be received via the user interface indicating a change to the first resource. Server node **604** may send the first resource asynchronously in resource send message **806** in Fig. 8, for example as an event message received by user agent node **602**.

[0084] As indicated above, server node **604** in Fig. 6 may include and/or may otherwise be included in execution environment **502** in Fig. 5. Request-in component **552** may receive a command sent in resource request message **804** in Fig. 8 for accessing the resource. Resource request message **804** may be sent by request-out component **462** in Fig. 4 in browser **404** operating in user agent node **602**. For example, request-out component **462** may be invoked in response to presentation controller component **418** detecting a selection of a hyperlink for accessing the resource presented in a web page. Request-in component **552** and controller component **512** may invoke a command handler component **516** to process the command. The command handler component **516** may interoperate with resource generator component **550** to transform the result produced by the command handler component **516** into a representation of the resource that is suitable for browser **404** in user agent node **602** that sent resource request message **804**. Resource generator component **550** may be a

particular response generator component **530** associated with the requested resource. Resource generator component **550** may interoperate with response-out component **556** to send resource send message **806** as a response to resource request message **804**. Response-in component **430** may receive the resource sent in resource send message **806** and process the resource as described above. For example, the resource may include and/or may be included in web application agent **406**.

[0085] Web application **504**, additionally, may be configured to receive a resource change message via a publish-in component (not shown) for receiving change messages according to a particular publish-subscribe protocol. A notification-out component (not shown) and subscription handler component (not shown) may be included in web application **504** for sending notification messages and processing subscription messages, respectively.

[0086] Web application **504** may be configured to receive any of the various adaptations and/or analogs of resource change message **802** and/or resource request message **804** described above. Web application **504** may be configured to send any of the adaptations and/or analogs of resource send message **806** described above. Analogously, browser **404** operating in execution environment **402** including and/or included in user agent node **602** may be configured to send any of the adaptations and/or analogs of resource request message **804** and to receive resource send message **806** in any of its adaptations and/or analogs described.

[0087] A first resource and/or an attach markup element may include representation information for presenting a user detectable representation via an output device of user agent node **602** by browser **404**. For example, the resource may include a web page including HTML markup elements and/or other markup, one or more script instructions, and/or one or more media representations such as an image, a video, and/or audio data. One or more of the user interface elements presented in presentation space **708b** in Fig. 7, for example, may be representations of markup elements included in and/or including an attach markup element, such as submit-don't-wait UI element **712a** in presentation space **708a** of first browser window **704a** in Fig. 7. A markup element for submit-don't-wait UI element **712a** may identify a command to perform in response to an event detected corresponding to submit-don't-wait UI element **712a**.

[0088] Returning to Fig. 2b, block **262** illustrates that the method further includes sending a first request message identifying a first command and sending a second request message identifying a second command, wherein, based on the first attach markup element, at least one the first request message includes first attach-request information and the second request message includes second attach-request information. Accordingly, a system for processing an attached command response based on a markup element includes means for sending a first request message identifying a first command and sending a second request message identifying a second command, wherein, based on the first attach markup element, at least one the first request message includes first attach-request information and the second request message includes second attach-request information. For example, as illustrated in Fig.

3b, the request-out component **362** is configured for sending a first request message identifying a first command and sending a second request message identifying a second command, wherein, based on the first attach markup element, at least one the first request message includes first attach-request information and the second request message includes second attach-request information. Fig. 4 illustrates request-out component **462** as an adaptation of and/or analog of request-out component **362** in Fig. 3b. One or more request-out components **462** operate in execution environment **402**.

[0089] Fig. 8 illustrates user agent node **602** in the role of a user agent sending a first command identified in first request message **808** received by server node **604**. First request message **808** includes first command information identifying the first command for processing by server node **604**. Fig. 8 illustrates user agent node **602** sending a second command in second request message **810**. Fig. 8 illustrates second request message **810** sent after first request message **808**. In various aspects, the second command may be sent by browser **404** to web application **504** in second request message **810** before, during, or after the first command in the first request message **808** is sent.

[0090] Adaptations and/or analogs of request-out component **362** in Fig. 3b, such as request-out **462** in Fig. 4 may send a request message in various contexts. For example, browser **404** may send a request message in response to a user input, in response to processing a reference included in a web page and/or other resource,

and/or in response to execution of an instruction in a script, by a plug-in and/or other extension of browser **404**.

[0091] Fig. 9a, Fig. 9b, Fig. 9c, and Fig. 9d illustrate various resources and/or portions of resources including an attach markup element according to various aspects of the subject matter described herein. The figures illustrate that in various aspects, an attach markup element may include and/or be included in markup elements such as a hyperlink markup element, a form markup element, and/or an event markup element to name a few examples.

[0092] Fig. 9a illustrates markup **900a** including attach markup element **902a** as an attribute in a hyperlink markup information **904a** as a hypertext markup language (HTML) anchor tag "<a/>". Fig. 9b illustrates markup **900b** including attach a form markup element **900b** as an HTML <form> element. An input tag markup element **902b** as a portion of a value for a type attribute in <input> tag **904b**. In the value "submit/attachable", the portion "attachable" may identify a subtype of the input type. In Fig. 7, submit-don't-wait UI element **712a** may be a visual representation based on <input> tag **904b**. Fig. 9c illustrates markup **900c** including attach markup element **902c** as parameter to an "onblur" event attribute **904c** in an HTML <input> tag **906c**. Fig. 9d illustrates markup **900d** including attach markup element **902d** as an <attach> tag. Attach markup element **902d** is a parent markup tag including a <form> tag **904d**, which includes a number of descendent markup elements defined by the nested structure of the markup language. As a parent tag, attach markup element **902d** may be defined to

indicate that commands identified by descendent markup elements have attachable command responses and/or to indicate that request messages generated based on the identified commands have attachable response messages according to various aspects. The attach markup elements illustrated in Fig. 9a, Fig. 9b, Fig. 9c, and Fig. 9c may be processed to generate attach-request information for including in respective request messages including command information based on the respective markup information in Fig. 9a, Fig. 9b, Fig. 9c, and Fig. 9d.

[0093] While Fig. 9a, Fig. 9b, Fig. 9c, and Fig. 9d illustrate attach markup elements included in HTML markup, attach markup elements may be defined according to other markup languages including SOAP, resource description framework (RDF), Apache ANT, standard general markup language (SGML), and various other markup languages.

[0094] Any of the exemplary markup information illustrated in Fig. 9a, Fig. 9b, Fig. 9c, and Fig. 9d may be processed by a compatible content handler component **414**, such as markup content handler **460**. The content handler component **414** may interoperate with one or more UI element handler components **416** to present a user detectable representation of the markup information to a user via an output device. For example, the received resource may include markup **900a** in Fig. 9a to present a selectable link in presentation space **708a** of first browser window **704a** or to present some other selectable input control, such as submit-don't-wait UI element **712**. Fig. 4 illustrates that a user input may be received by presentation controller component **418** and/or a UI element handler **416** corresponding to the link or to submit-don't-wait UI element **712** in

the resource received in resource send message **806** including the first attach markup element. The hyperlink markup element **904a** in Fig. 9a identifies a command associated with a presentable link. The <input> tag **904b** in Fig 9b identifies a command associated with a form submit UI element, which may be submit-don't-wait UI element **712** in Fig. 7.

[0095] In response to a user input for selecting the link presented in presentation space **708a** in Fig. 7 or in response to detecting some other configured event, event information may be received by presentation controller component **418** and/or a UI element handler component **416**. In an aspect, presentation controller component **418** and/or the UI element handler component **416** may interoperate with markup content handler component **460**, to match the event with the command information stored in a document object model (DOM) maintained by markup content handler component **460** and generated based on the markup information included in the received resource.

[0096] Markup content handler component **460** may interoperate with content manager component **412** to generate command information to send in a request message to web application **504** in Fig. 5 operating in server node **604** in Fig. 6 identified by the URI in the hyperlink markup element **904a** in Fig. 9a. The request message may be sent as described above. For example, the request message may be sent as an HTTP request. First request message **808** and second request message **810** may be sent in this manner and/or in an analogous manner according to another suitable protocol. One of first request message **808** and second request message **810** may be sent in response

to a user selection of a bookmark, a history item, and/or other event identifying the server node and a command.

[0097] Fig. 10a, Fig. 10b, and Fig. 10c illustrate various exemplary request messages and response messages as HTTP messages included in an HTTP communication between browser **404** operating in user agent node **602** and web application **504** operating in server node **604**. Fig. 10a illustrates first HTTP request **1000a** including first command information identifying a first command. The first command information in HTTP request **1000a** includes first URI **1002a** based on href attribute value **906a** in Fig. 9a illustrated as "www.mySite.us/services/medata?mediaID=mediaA" identifying a metadata service for retrieving metadata for an identified media item. The media item is identified, in Fig. 10a, in first URI **1002a** by query parameter "mediaID" having a value of "mediaA". First command information in HTTP request **1000a** may also include HTTP method token **1004a** illustrated as "GET". The first command information may include information in an HTTP header. For example, cookie header **1006a** identifies a session identifier illustrated by a "sessionid" cookie. A server may identify a command or an aspect of a command based on a value of a cookie and/or other HTTP header information. Server node **604** may be identified by a host portion of first URI **1002a**, "www.mySite.us". Command information identifying the first command in first HTTP request **1000a** may include information in one or more of first URI **1002a**, HTTP method token **1004a**, and cookie header **1006a**.

[0098] First HTTP request may include first attach-request information illustrated by multipart/attached MIME type **1008a**. An HTML content handler component **414** and/or content manager component **412** may include MIME type **1008a** in first HTTP request **1000a** based on attach attribute markup element **902a** in Fig. 9a.

[0099] HTTP request **1000a** may be generated by browser **404** in response to receiving the resource from server node **604**. The resource may include markup **900a** including attach markup element **902a**. Markup **900a** may be received by browser **404** in the resource received in resource send message **806** in Fig. 8 or may be received in a second resource received in a second resource send message (not shown).

[0100] First HTTP request **1000a** may be sent by request-out component **462** as instructed by content manager component **412** to HTTP layer **410**. HTTP layer **410** may send the request message illustrated by first request message **808** in Fig. 8 to server node **604**.

[0101] Fig. 11a, Fig. 11b, and Fig. 11c also illustrate various exemplary HTTP messages included in an HTTP communication between browser **404** operating in user agent node **602** and web application **504** operating in server node **604**. Fig. 11a illustrates first HTTP request **1100a**. First HTTP request **1100a** includes first URI **1102a** illustrated as www.otherSite.net/path/formHandler.cgi identifying a service for processing a form. First HTTP request **1100a** also includes HTTP method token **1104a** illustrated as “POST-ATTACH”. First command information may include form input **1106a**. Form input **1106a** is illustrated as an HTTP representation encoded according to

MIME type “application/x-www-form-urlencoded”. Server node **604** may be identified by a host portion of first URI **1102a**, www.otherSite.net. Command information identifying the first command in first HTTP request **1100a** may include information in one or more of first URI **1102a**, HTTP method token **1104a**, and an HTTP entity that may be and/or may include an HTTP representation **1106a.**

[0102] HTTP request **1100a** may be generated by browser **404** in response to receiving a resource from server node **604**. The resource may include markup **900b** including attach markup element **902b** illustrated as a string, “attachable” in a value of an “onblur” event attribute in <input> tag **904b**. Whenever a representation of the input element presented on a display device loses input focus, a script “log()” routine is invoked with the “attachable” value passed as a parameter. Markup **900b** may be received by browser **404** in the resource received in resource send message **806** in Fig. 8 or may be received in a second resource received in a second resource send message (not shown).

[0103] In processing an onblur event, browser **404** may generate first HTTP request **1100a**, for example, to send in first request message **808** in Fig. 8 to server node **604**. In addition to including the command information described above, first HTTP request **1100a** may include attach-request information illustrated in Fig. 11a by attach header **1110a**. Attach header **1110a** may be defined with one of several valid values for determining whether first HTTP request **1100a** identifies a command with an attachable command response and/or whether an HTTP response for first HTTP request **1100a** is

attachable. Attach header **1110a** may be included in first HTTP request **1100a** based on attribute value attach markup element **902b** in Fig. 9b.

[0104] Command information as well as attach-request information, if any, may be provided to and/or generated by content manager component **412** to generate a request message including the command information, to identify a command for performing by a server. Command information may further include a method token, such as an HTTP method token in an HTTP request. An HTTP method token may be provided by browser **404** and/or web application agent **406**. Content manager component **412** in Fig, 4, operating in user agent node **602**, may interoperate with HTTP layer **410** to send the first command information in first request message **808** to server node **604** via network **606**. Server node **604** may be identified and located in network **606** by the first URI. First request message **808** may include first HTTP request **1000a** or first HTTP request **1100a** including attach-request information based on attach markup element **902a** in Fig. 9a or attach markup element **902b** in Fig. 9b.

[0105] A second request message illustrated by second request message **810** in Fig. 8 may be sent in an analogous manner. Second HTTP request **1000b** in Fig. 10b illustrates an exemplary HTTP request that may be sent in and/or as second request message **810**. Second HTTP request message **1000b** includes command information identifying a command for processing by web application **504** in server node **604**. The command information may include and/or otherwise may be based on URI **1002b**, HTTP method token **1004b**, and/or one or more headers such as cookie header **1006b**.

Second HTTP request **1000b** may include second attach-request information based on an attach markup element included in a resource for generating second HTTP request **1000b**. Attach-request information in second HTTP request **1000b** may include "GET-ATTACH" HTTP method token **1004b** and/or multipart/attached MIME type identifier **1008b**.

[0106] Returning to Fig. 2a, block **252** illustrates that the method yet further includes receiving a first request message identifying a first command and receiving a second request message identifying a second command, wherein, based on the first attach markup element, at least one of the first request message includes first attach-request information and the second request message includes second attach-request information. Accordingly, a system for processing an attached command response based on a markup element includes means for receiving a first request message identifying a first command and receiving a second request message identifying a second command, wherein, based on the first attach markup element, at least one of the first request message includes first attach-request information and the second request message includes second attach-request information. For example, as illustrated in Fig. 3a, request-in component **352** is configured for receiving a first request message identifying a first command and receiving a second request message identifying a second command, wherein, based on the first attach markup element, at least one of the first request message includes first attach-request information and the second request message includes second attach-request information. Fig. 5 illustrates request-in component **552** as an adaptation of and/or analog of request-in component

352 in Fig. 3a. One or more request-in components **552** operate in execution environment **502**.

[0107] Request-in component **552** in Fig. 5 may receive a request message such as first request message **808** in Fig. 8 and/or second request message **810** from user agent node **602** via network stack **508**, HTTP layer **510**, and network application platform **506** as described above. Request-in component **552** may receive some or all information in a request message by interoperating with network application platform **506**. Request-in component **552** may identify a command received in a request message, such as the first command in first request message **808** and/or the second command in second request message **810**. Request-in component **552** may interoperate with one or more components in controller component **512** to identify a command handler component **516** to perform an operation included in processing the command.

[0108] A first command handler component **516** may be invoked in response to the first command information included in first request message **808** and a second command handler component **516** may be invoked in response to the second command information in second request message **810**. Controller **512** and/or request-in component **552** may identify a command handler component **516** based on some or all of a URI included in command information. Command information identifying a command may be processed by controller component **512** in identifying a suitable command handler component **516**. One or more components of model subsystem **514**

may be included providing information to one or more command handler components **516** to perform an operation included in processing the command.

[0109] A command, such as the first command identified in first request message **808** in Fig. 8 and the second command identified in second request message **810**, may be identified by command information included in a request message based on an attach markup element and/or a markup element including and/or included in an attach markup element. Fig. 9a, Fig. 9b, Fig. 9c, and Fig. 9d illustrate that a command may be identified by at least one of a hyperlink markup element, a form markup element, and an event markup element. In Fig. 9a, an "href" attribute value **906a** may be included in command information identifying a command in a request message. In, Fig. 9b, action attribute value **908b**, method value **910b**, and data included in one or more input tags may be included in command information and/or otherwise included in generating command information.

[0110] A form markup element may be specified for receiving user input. User data may be received that corresponds to a user detectable representation of the form element presented via an output device of the user agent node. Command information may include received user data and/or may otherwise be based on the form markup element. Fig. 9b, Fig. 9c, and Fig. 9c all illustrate form markup elements that affect the content of corresponding command information based on user data received for the respective forms.

[0111] An event markup element may identify an event to be detected by the user agent node for sending a request message for receiving by a server node that sent the event markup language in a resource including an attach markup element. The event may be based on and/or may be detected based on a user input, a specified time, a specified duration of time, a specified condition when met, and execution of an instruction sent from the server node to the user agent node. Hyperlink markup element **904a** in Fig. 9a identifies a selection input event for sending a request message. <form> tag **906b** in Fig. 9b and <form tag> **904d** in Fig 9d identify respective events for submitting form information. <input> tag **906c** in Fig. 9c identifies an "onblur" event. Fig. 9d illustrates responsemax attribute **908d** specifying a duration of time for determining whether a command has an attachable command response and/or whether a response message is attachable.

[0112] As illustrated by attach tag **902d** in Fig. 9d, an attach markup element may be a parent markup language. Fig. 9d illustrates that an attach markup element may be included in a parent markup element. A parent markup element may include multiple child markup elements. More than one child element may identify a command that may be identified in a request message. The attach markup element may be defined for and/or otherwise indicate that a command in each of the more than one child elements has a corresponding attachable command response. Alternatively or additionally, the attach markup element may be defined for determining that one or more request messages including a command identified in the parent markup element have attachable response messages.

[0113] Returning to Fig. 2a, block **254** illustrates that the method additionally includes determining at least one of that a first command response to the first command is an attachable command response based on the first attach-request information and that a second response message to the second request message is an attachable response message based on the second attach-request information. Accordingly, a system for processing an attached command response based on a markup element includes means for determining at least one of that a first command response to the first command is an attachable command response based on the first attach-request information and that a second response message to the second request message is an attachable response message based on the second attach-request information. For example, as illustrated in Fig. 3a, attach director component **354** is configured for determining at least one of that a first command response to the first command is an attachable command response based on the first attach-request information and that a second response message to the second request message is an attachable response message based on the second attach-request information. Fig. 5 illustrates attach director component **554** as an adaptation of and/or analog of attach director component **354** in Fig. 3a.

[0114] In one aspect, first request message **808** may include first command information identifying the first command. The first command information may be based on the first resource. For example, as described above the first command information may be based on information included in and/or otherwise associated with an attach markup element. In another aspect, second request message **810** may include second

command information identifying the second command. The second command information may be based on the first resource. For example, as described above the second command information may be based on information included in and/or otherwise associated with an attach markup element. Thus, user agent node **602** may send first request message **808** for receiving by server node **604** where first request message **808** includes first command information, based on the first resource sent in resource send message **806**. Second request message **810** may be generated and sent analogously.

[0115] First request message **808** and/or second request message may include attach-request information based on an attach markup element sent to user agent node **602**. At least one of the two request messages includes attach-request information based on the first attach markup element in the first resource. In an aspect, user agent node **602** may send first request message **808** including the first attach-request information based on the first attach markup element for receiving by server node **604**. Attach-request information included in a request message identifying a command may be included in the request message for determining that a command response to the command is attachable and/or for determining that a response message for the request message including the attach-request information is attachable. Thus, when first request message **808** includes first command information based on the first resource and includes the first attach-request information based on the first attach markup element in the first resource, the first attach-request information may be sent by the user agent node and received by the server node for determining that the first command response for the first

command is attachable by attach director component **554** in Fig. 5. Alternatively or additionally, the first attach-request information may be for determining that a first response message (not shown) for the first request message **808** is an attachable response message.

[0116] For example, in response to a user input selecting the link identified by hyperlink markup element **904a** in the resource sent to user agent node **602** in resource send message **806**, a UI element handler **416** corresponding to a visual representation of the link may invoke content manager component **412** to send first request message **808** including first HTTP request **1000a**. When processed by attach director component **554** in web application **504** in Fig. 5, multipart/attached MIME type **1008a** may indicate to attach director component **554** that the first command identified in first HTTP request **1000a** has an attachable command response. Attach director component **554** may determine based on MIME type **1008a** that first HTTP request **1000a** has an attachable first HTTP response (not shown).

[0117] Attach-request information may be exchanged between a user agent node and server node for determining whether an attach-request condition is met as described in more detail below. An attach-request condition may be identified and/or evaluated based on attach-request information. In an aspect, determining that a command response is attachable and/or determining that a response message is attachable may include determining that an attach-request condition is met. In Fig. 11a, attach header **1110a** illustrates that any of “ok”, “yes”, or “no” are acceptable values. “ok” may be

specified to indicate that the first command response and/or the first HTTP response to first HTTP request **1100a** may be attachable at the option of web application **504** as determined by attach director component **554**. “yes” indicates that the first command response and/or the first HTTP response is attachable. “no” indicates that the first command response and/or the first HTTP response is not attachable in aspects of web application **504**.

[0118] An attached response is returned in an attached response message. In an aspect, determining and/or otherwise identifying that a response message is attachable may be performed in response to and/or otherwise based on determining that a command response is attachable. Determining that second response message **814** in Fig. 8 is attachable may be based on determining that the first command response, for the first command identified in first request message **808** is attachable. For example, attach director component **554** may determine that a first available response message for sending to a user agent that sent the attachable command is an attachable response message. Alternatively or additionally, attach director component **554** may determine that a response message is attachable if its request message matches the request message of the attachable command response according to some criterion. In one aspect, HTTP method tokens for the request messages must match.

[0119] At least one of first request message **808** and second request message **810** includes attach-request information based on the attach markup element in the first resource.

[0120] In an aspect, at most one of first request message **808** and second request message **810** may include attach-request information based on a second attach markup element, which may be included in the first resource or in a second resource. For example, second request message **810** may be sent by user agent node **602** in response to receiving a second resource from server node **604**. The second resource may include a second attach markup element and may identify the second command. User agent node **602** may send second request message **810** including second command information based on the second resource and including the second attach-request information based on the second attach markup element. The second attach-request information may be received in the second request message **810** by server node **604** for determining that second response message **814** is attachable based on the second attach-request information.

[0121] Alternatively or additionally, server node **604** may determine that a second command response for the second command is attachable based on the second attach-request information. For example, second HTTP request **1000b** may be exchanged between browser **404** in Fig. 4 and web application **504** in Fig. 5 based on <form> tag **906b** included in a second resource sent to user agent node **602** by server node **604**. MIME type **1008b** may be included in second HTTP request **1000b** based on "attachable" subtype value of attach markup element **902b**.

[0122] Second request message **810** may include second command information identifying the second command. The second command information may be based on

the first resource. User agent node **602** may send second request message **810** for receiving by server node **604** where second request message **810** includes second command information, based on the first resource sent in resource send message **806**. As described above, first request message **808** and/or second request message **810** may include attach-request information based on an attach markup element sent to user agent node **602**. In an aspect, user agent node **602** may send second request message **810** including the second attach-request information based on the first attach markup element for receiving by server node **604**. When second request message **810** includes second command information based on the first resource and includes the second attach-request information based on the first attach markup element in the first resource, the second attach-request information may be sent by the user agent node and received by the server node for determining that second response message **814** is attachable. Alternatively or additionally, the second attach-request information may be for determining that a second command response for the second command is attachable.

[0123] Determining that the first command response, for the first command identified in first request message **808**, is attachable may be based on determining that second response message **814** is attachable.

[0124] First request message **808** may be sent by user agent node **602** in response to receiving a second resource from server node **604**. The second resource may include a second markup element and may identify the first command. User agent node **602** may

send first request message **808** including first command information based on the second resource and including the first attach-request information based on the second attach markup element. The first request-information may be received in first request message **808** by server node **604** for determining that the first command response to the first command is attachable based on the second attach-request information. Alternatively or additionally, server node **604** may determine that a first response message (not shown) to the first request message **808** is attachable based on the second attach-request information.

[0125] In a further aspect, a command, having an attachable command response, may be a command for which processing may be deferred by a server. Such a command may be performed and/or its attachable command response may be generated in response to determining that a response message is attachable. The command may include the command response as an attached command response. A determination to defer processing of the command and to process the command in response to determining that a response message is attachable may be performed by attach director component **554** in Fig. 5 interoperating with one or more command handler components **516** for processing the particular command.

[0126] Attach director component **554** in Fig. 5 may be invoked to determine whether a command response for a command identified in a request message is attachable and/or to determine whether the response message for the request message is attachable before invoking a command handler component **516**, during processing of an operation

included in performing the command by a command handler component **516**, and/or after processing of the command by a command handler component **516**. Attach director component **554** may be invoked in response to receiving and/or otherwise detecting attach-request information indicating that a command identified in a received request message has an attachable command response and/or indicating that a response message for a received request message is attachable.. Attach-request information may be received and/or otherwise detected in a variety of ways in various aspects described below.

[0127] In an aspect, a request message and response message pair may be formatted and exchanged according to the HTTP protocol. Attach-request information may be included in and/or otherwise identified based on an HTTP request in an HTTP request line, an HTTP general header, an HTTP request header, an HTTP entity header, and/or an HTTP entity that includes an HTTP representation as illustrated in Fig. 10a, Fig. 10b, and Fig 11a and described above.

[0128] Attach-request information received in a request message by web application **504** may be provided to attach director component **554** via request-in component **552**, controller component **512**, a command handler component **516**, a response generator component **530**, and/or other components included in processing the request message. Some or all of the attach-request information may be included in and/or otherwise identified by an attach header defined to include at least portion a of the attach-request

information and included in the request message. Fig. 11a illustrates exemplary attach header **1110a**.

[0129] Attach-request information may be included in and/or otherwise generated based on an attach markup element. A markup language may define markup elements including tags, attributes, and attribute values. An attach markup element, in various aspects may include and/or may be included in a tag, an attribute, and/or an attribute value. An attach markup element may be defined in a markup language for determining that a response message is attachable and/or for determining that a command response for a command identified in a request message is attachable.

[0130] Attach request information may identify a MIME type defined for indicating that a command response and/or a response message is attachable. A server may determine that a command identified in a request message has an attachable command response and/or may determine that the response message for the request message is attachable based on the MIME type identifier. First HTTP request **1000a** in Fig. 10a includes a multipart/attached MIME type identifier. "Multipart/attached" may be defined to indicate that a command response to the command identified in HTTP request **1000a** sent by a user agent may be included in an attached second HTTP response to a second HTTP request sent by the user agent node. In Fig. 4, markup content handler component **460** may instruct content manager component **412** to send first HTTP request **808** in Fig. 8 including a multipart/attached MIME type identifier **1008a** in an HTTP ACCEPT header as illustrated in Fig. 10a to indicate that the first command

identified in first HTTP request **1000a** has an attachable command response. In Fig. 5, attach director component **554** interoperating with controller component **512** may detect MIME type identifier **1008a**, directly and/or indirectly, and determine that the first command in first HTTP request **1000a** has an attachable command response.

[0131] Attach-request information may identify an HTTP method token defined to indicate that a command response is attachable and/or to indicate that a response message is attachable. For example, a new method token, such as "GET-ATTACH" and/or "POST-ATTACH", may be defined to indicate that a command has an attachable command response and/or to indicate that a response message to a request message including the new method token is attachable. Existing method tokens may be included in indicating and/or determining that a command response and/or a response message is attachable when combined with other attach-request information in a request message.

[0132] Attach-request information may identify an attach-request condition for evaluating by a server node and/or may be included in evaluating an attach-request condition. In an aspect, an attach-request condition may identify a temporal condition for evaluating by a server node. For example, attach-request information processed by attach director component **554** in Fig. 5 may identify a duration of time for processing and responding to a command received in a request message. Attach markup element **902d** includes responsemax attribute **906d** set to a value of "10s" for ten seconds. When a command sent by a user agent in a request message is received by a server

node, the server node may determine that the command is attachable based on determining that processing time meets or exceeds the ten seconds specified by the condition. If the condition is met, attach director component **554** may determine that the command is attachable. In another aspect, a response message that has not been sent with a specified duration may be determined to be attachable. A command handler component **516** for a command may determine that the command received in a request message cannot be or has not been processed in the specified duration. In response, the command handler component **516** may interoperate with attach director component **554** to determine that the command response for the command is attachable.

[0133] A script included in web application agent **406** may be configured to include attach-request information in a request message based on an attach markup element included in a markup language resource including and/or otherwise associated with the script. A request message may be sent by and/or in response to executing the script. Attach-request information may instruct and/or otherwise cause a server to queue and/or cache a command identified in a received request message. A server may queue and/or cache an attachable command until an attach-condition is met. Attach director component **554** may manage a command queue and/or list. Attach director component **554** may be configured to process a command in a list or queue when resource(s) required for performing the command are available.

[0134] A first command handler component **516** may be invoked by controller component **512** for performing some or all of the processing for the first command

identified by the first command information in first request message **808**. Processing of a command, such as the first command, may generate and/or otherwise identify a result or command response. For first request message **808**, a first command response and/or data for the first command response may be generated by first command handler component **516**. A command response or a portion of a command response may include and/or provide access to any valid HTTP entity and/or HTTP representation such as hypertext markup language (HTML) and/or markup language, a scripting language, byte code, image data, audio data, and machine code.

[0135] The method illustrated in Fig. 2a may also include sending a response message to a request message identifying an attachable command where the response message either does not include the command response or includes only a portion of the first command response. The response message may be sent in response to determining that the command is attachable by the server node. The method illustrated in Fig. 2b may also include receiving a response message to a request message identifying an attachable command where the response message includes at most a portion of a command response to the attachable command.

[0136] In Fig. 5, attach director component **554** operating in server node **604** may instruct response-out component **556** to send a first response message (not shown) as a response to first request message **808**. Fig. 11b illustrates an exemplary first HTTP response **1100b** to first HTTP request **1100a**. Note that HTTP response **1100b** does not include a command response to a first command identified in first HTTP request **1100a**.

A response message may be sent from a server node to a user agent node without starting and/or completing processing of a command identified in a corresponding request message, allowing a user agent node to receive information before and/or during processing of the command.

[0137] Attach director component **554** may instruct response generator component **530** to send the first command response, via response-out component **556**, in an attachable response message to a second request message received from browser **404** and not to send a response message to the first request message **808**. Fig. 10a, Fig. 10b, and Fig. 10c show no HTTP response for first HTTP request **1000a**. There may be no one-to-one relationship between HTTP requests and HTTP responses contrary to RFC 2616. A server node may send an attached HTTP response including some or all of a command response to an attachable command without sending an HTTP response to an HTTP request that identifies the command.

[0138] Returning to Fig. 2a, block **256** illustrates that the method additionally includes, in response to the determination, sending, to the user agent node in the second response message, an attached command response including at least a portion of the first command response. Accordingly, a system for processing an attached command response based on a markup element includes means for in response to the determination, sending, to the user agent node in the second response message, an attached command response including at least a portion of the first command response. For example, as illustrated in Fig. 3a, response-out component **356** is configured for, in

response to the determination, sending, to the user agent node in the second response message, an attached command response including at least a portion of the first command response

[0139] In Fig 8, the second command identified by second command information in second request message **810** may or may not be processed prior to sending attached second response message **814**. In an aspect, the second command identified in second request message **810** may be processed and some or all of the second command response may be attached and returned in an attached response message other than second response message **814**. The first command response may be generated before, during and/or after the second command response is generated.

[0140] In Fig. 5, some or all of the first command response to the first command identified by first request message **808** may be generated by a response generator component **530** interoperating with a command handler component **516**. Some or all of the first command response may be provided to response-out component **556** as indicated by attach director component **554** in determining that a response message is attachable. In an aspect, the second command response to the second command identified in second request message **810** may also be provided to response-out component **556**. Response-out component **556** in Fig. 5 may interoperate with network stack **508** and/or HTTP layer **510** to send a command response in a response message. Some or all of the response message may be generated by response-out component **556**. In an aspect, a response-out component **556** may provide command

response information to network application platform **506** and/or HTTP layer **510** to include in a command response in a response message generated by controller component **512**, network application platform **506**, and/or HTTP layer **510**.

[0141] Response-out component **556** may generate and/or otherwise transform at least some of first command response information into one or more message entities, such as HTTP entities and/or HTTP representations, to include as an attached command response in attached second response message **814**. At least some of the second command response may or may not be included in the second response message **814**. Response-out component **556** sends second response message **814** as a response to second request message **810**. In response to determining that the first command is attachable, response-out component **556** includes some or all of the first command response as an attached command response in second response message **814**.

[0142] Returning to Fig. 2b, block **264** illustrates that the method yet further includes, in response to sending at least one of the first attach-request information and the second attach-request information, receiving, in a second response message to the second request message, an attached command response including at least a portion of a first command response for the first command. Accordingly, a system for processing an attached command response based on a markup element includes means for, in response to sending at least one of the first attach-request information and the second attach-request information, receiving, in a second response message to

the second request message, an attached command response including at least a portion of a first command response for the first command. For example, as illustrated in Fig. 3b, attached response component **364** is configured for, in response to sending at least one of the first attach-request information and the second attach-request information, receiving, in a second response message to the second request message, an attached command response including at least a portion of a first command response for the first command. Fig. 4 illustrates attached response component **464** as an adaptation of and/or analog of attached response component **364** in Fig. 3b. One or more attached response components **464** operate in execution environment **402**.

[0143] Attach-response information may be sent in an attached response message to a user agent node for determining that the response message is an attached response message including an attached command response. In Fig. 4, response-in component **430** may receive second response message **814** as described above. Response-in component **430** may provide some or all of second response message **814** and/or information based on second response message **814** to attached response component **464.** Attached response component **464** may determine that second response message **814** is an attached response message and locate the attached command response including the first command response or a portion of the first command response in second response message **814**.

[0144] A user agent node may determine that a received response message is attached based on received attach-response information for determining whether an

attach condition is met. Attach-response information may at least partially include and/or otherwise identify attach-response information.

[0145] A first response message, in a further aspect, may include attach-response information indicating to the user agent node that at least a portion of the first command response is not included in the first response message. First HTTP response **1100b** in Fig. 11b illustrates status code **1104b** including a status code defined to indicate that first HTTP response **1100b** does not include any and/or some of the first command response. Alternatively or additionally, the "Yes" value of Attach header **1106b** may indicate that the first command response is not included.

[0146] A server node may include and a user agent node may detect attach-response information in an HTTP response message to an HTTP request message identifying a command with a corresponding attachable command response The attach-response information may be included in an HTTP response line, an HTTP general header, an HTTP response header, an HTTP entity header, and/or an HTTP entity that may include an HTTP representation. Some or all of the attach-response information may be included in a attach header defined to include at least a portion of the attach-response information. The attach-response information may include a MIME type identifier defined to indicate that some or all of a command response will be received as an attached command in a second response message. Fig. 11b illustrates status code **1104b** included in first HTTP response **1100b**. Fig 11b also illustrates first HTTP response **1100b** included in attach cookie **1108b**, which may be included in attach-

response information. Attach cookie **1108b** provides a correlator value indicating the first command response is included in another response message and may be identified by a matching correlator.

[0147] Second HTTP response **1000c** in Fig. 10c includes multipart/attached MIME type identifier **1014c** for indicating that second HTTP response **1000c** is attached and that second HTTP response **1000c** includes an attached command response illustrated in HTTP entity **1006c**.

[0148] In yet another aspect, a user agent node may send another request message, referred to as a non-attachable request message, for receiving and processing by the server while a first attachable command identified in a first request message is being processed. The non-attachable request message may include another command for processing by the server. The non-attachable request message may include and/or otherwise be associated with non-attach information indicating that an attached response message may not be sent as a response message to the non-attachable request message. A response message may be sent for the non-attachable request message including a command response for the command identified by the non-attachable request message, but the response message does not include any portion of a command response for an attachable command identified in another request message. Such a response message is referred to herein as an unattached response message.

[0149] In still another aspect, attach-response information may include and/or otherwise identify an attached matching criterion for determining whether an attached condition is met. For example, an attached matching criterion may include an attached response message correlator identifying a location in a response message for identifying the attached command response and/or may include a symbolic identifier for matching to identify the attached command response. First HTTP response **1100b** in Fig. 11b illustrates a correlator in attach header **1106b**. Attach director component **554** may instruct response-out component **556** to include attach header **1106b** and/or attach cookie **1108b** in first HTTP response **1100b** in Fig 11b. Second HTTP response **1100c** in Fig. 11c may be sent in second response message **814** in Fig. 8. Either or both of attach header **1106b** and attach cookie **1108b** may allow browser **404** and/or web application agent **406** to identify second response message **814** in Fig 8 as attached. Second response message **814** may include second HTTP response **1100c** in Fig. 11c also including the identified correlator. Fig. 11c illustrates attached command response **1104c** in HTTP entity **1106c** in second HTTP response **1100c**. Attached command response **1104c** is the first command response for the first command identified in first HTTP request **1100a** in Fig.11a, which may be sent in first request message **808** in Fig. 8. The correlator in the various aspects described and/or illustrated may be included in attach-request information for determining whether an attach condition is met by detecting matching correlators. The first command response is illustrated by first representation **1104c** in first entity **1106c**. The second command response is illustrated by second representation **1108c** included in second entity **1110c**. Fig. 11c illustrates

status code **1112c** as a status code for the second HTTP request (not shown) in the communication illustrated in Fig. 11a, Fig. 11b, and Fig. 11c.

[0150] Fig. 10c illustrates exemplary attached second HTTP response **1000c** sent by server node **604** and received by user agent node **602**. In Fig. 5, attach director component **554** operating in server node **604** may communicate with one or more response generator components **530** to direct some or all first command response information and second command response information to response-out component **556** for generating and/or providing for generating attached second HTTP response **1000c**. The first command response is illustrated by first representation **1004c** in first entity **1006c**. The second command response is illustrated by second representation **1008c** included in second entity **1010c**.

[0151] In an aspect, status code **1012c** is included as a status code for second HTTP request **1000b** as specified in RFC 2616. In another aspect, a separate attached status code may be provided in an attached HTTP response, for example as an entity header in first entity **1006c**. Response-out component **556** may instruct controller component **512** to send attached second response message **814** as it sends other response messages described above.

[0152] In response to performing the command, command handler component **516** may notify attach director component **554** to determine and/or otherwise identify an attachable response message for sending some or all of a command response to the attachable command to a user agent node that sent the request message identifying the

attachable command. In an aspect, attach director component **554** may identify the next response message to another request message scheduled for sending most immediately to the user agent node as attachable. Attach director component **554** may identify the next response message based on information in an attach markup element, as illustrated by attachcond attribute **908a** in Fig. 9a. In another aspect, attach director component **554** may interoperate with a command handler component **516** for a command and with a response generator component **530** to send whatever portion of an attachable command response to the command is available whenever response messages for request messages identifying other commands are sent to the user agent node requesting the attachable command. In another aspect, determining attachable response messages may be based on a timer that expires at repeated, fixed and/or variable durations of time.

[0153] To the accomplishment of the foregoing and related ends, the descriptions and annexed drawings set forth certain illustrative aspects and implementations of the disclosure. These are indicative of but a few of the various ways in which one or more aspects of the disclosure may be employed. The other aspects, advantages, and novel features of the disclosure will become apparent from the detailed description included herein when considered in conjunction with the annexed drawings.

[0154] It should be understood that the various components illustrated in the various block diagrams represent logical components that are configured to perform the functionality described herein and may be implemented in software, hardware, or a

combination of the two. Moreover, some or all of these logical components may be combined, some may be omitted altogether, and additional components may be added while still achieving the functionality described herein. Thus, the subject matter described herein may be embodied in many different variations, and all such variations are contemplated to be within the scope of what is claimed.

[0155] To facilitate an understanding of the subject matter described above, many aspects are described in terms of sequences of actions that may be performed by elements of a computer system. For example, it will be recognized that the various actions may be performed by specialized circuits or circuitry (e.g., discrete logic gates interconnected to perform a specialized function), by program instructions being executed by one or more instruction-processing units, or by a combination of both. The description herein of any sequence of actions is not intended to imply that the specific order described for performing that sequence must be followed.

[0156] Moreover, the methods described herein may be embodied in executable instructions stored in a computer readable medium for use by or in connection with an instruction execution machine, system, apparatus, or device, such as a computer-based or processor-containing machine, system, apparatus, or device. As used here, a "computer readable medium" may include one or more of any suitable media for storing the executable instructions of a computer program in one or more of an electronic, magnetic, optical, electromagnetic, and infrared form, such that the instruction execution machine, system, apparatus, or device may read (or fetch) the instructions from the

computer readable medium and execute the instructions for carrying out the described methods. A non-exhaustive list of conventional exemplary computer readable media includes a portable computer diskette; a random access memory (RAM); a read only memory (ROM); an erasable programmable read only memory (EPROM or Flash memory); optical storage devices, including a portable compact disc (CD), a portable digital video disc (DVD), a high definition DVD (HD-DVD.TM.), a Blu-ray.TM. disc; and the like.

[0157] Thus, the subject matter described herein may be embodied in many different forms, and all such forms are contemplated to be within the scope of what is claimed. It will be understood that various details may be changed without departing from the scope of the claimed subject matter. Furthermore, the foregoing description is for the purpose of illustration only, and not for the purpose of limitation, as the scope of protection sought is defined by the claims as set forth hereinafter together with any equivalents thereof entitled to.

[0158] All methods described herein may be performed in any order unless otherwise indicated herein explicitly or by context. The use of the terms "a" and "an" and "the" and similar referents in the context of the foregoing description and in the context of the following claims are to be construed to include the singular and the plural, unless otherwise indicated herein explicitly or clearly contradicted by context. The foregoing description is not to be interpreted as indicating that any non-claimed element is essential to the practice of the subject matter as claimed.

PTO/SB/06 (12-04)

Date: 05/28/10

Approved for use through 7/31/2006. OMB 0651-0032
U.S. Patent and Trademark Office; U.S. DEPARTMENT OF COMMERCE

Under the Paperwork Reduction Act of 1995, no persons are required to respond to a collection of information unless it displays a valid OMB control number.

PATENT APPLICATION FEE DETERMINATION RECORD

Substitute for Form PTO-875

Application or Docket Number: 12/789,538

APPLICATION AS FILED – PART I

FOR	(Column 1) NUMBER FILED	(Column 2) NUMBER EXTRA	SMALL ENTITY RATE ($)	SMALL ENTITY FEE ($)	OR	OTHER THAN SMALL ENTITY RATE ($)	OTHER THAN SMALL ENTITY FEE ($)
BASIC FEE (37 CFR 1.16(a), (b), or (c))	N/A	N/A	N/A	82		N/A	
SEARCH FEE (37 CFR 1.16(k), (i), or (m))	N/A	N/A	N/A	270		N/A	
EXAMINATION FEE (37 CFR 1.16(o), (p), or (q))	N/A	N/A	N/A	110		N/A	
TOTAL CLAIMS (37 CFR 1.16(i))	21 minus 20 =	1	x$26	26	OR	x$52	
INDEPENDENT CLAIMS (37 CFR 1.16(h))	6 minus 3 =	* 3	x$110	330		x$220	
APPLICATION SIZE FEE (37 CFR 1.16(s))	If the specification and drawings exceed 100 sheets of paper, the application size fee due is $260 ($130 for small entity) for each additional 50 sheets or fraction thereof. See 35 U.S.C. 41(a)(1)(G) and 37 CFR						
MULTIPLE DEPENDENT CLAIM PRESENT (37 CFR 1.16(j))			195			390	
* If the difference in column 1 is less than zero, enter "0" in column 2.			TOTAL	818		TOTAL	

APPLICATION AS AMENDED – PART II

		(Column 1) CLAIMS REMAINING AFTER AMENDMENT		(Column 2) HIGHEST NUMBER PREVIOUSLY PAID FOR	(Column 3) PRESENT EXTRA	SMALL ENTITY RATE ($)	SMALL ENTITY ADDI-TIONAL FEE ($)	OR	OTHER THAN SMALL ENTITY RATE ($)	OTHER THAN SMALL ENTITY ADDI-TIONAL FEE ($)
AMENDMENT A	Total (37 CFR 1.16(i))	*	Minus	**	=	x =		OR	x =	
	Independent (37 CFR 1.16(h))	*	Minus	***	=	x =		OR	x =	
	Application Size Fee (37 CFR 1.16(s))									
	FIRST PRESENTATION OF MULTIPLE DEPENDENT CLAIM (37 CFR 1.16(j))					N/A		OR	N/A	
						TOTAL ADD'T FEE		OR	TOTAL ADD'T FEE	

		(Column 1) CLAIMS REMAINING AFTER AMENDMENT		(Column 2) HIGHEST NUMBER PREVIOUSLY PAID FOR	(Column 3) PRESENT EXTRA	RATE ($)	ADDI-TIONAL FEE ($)	OR	RATE ($)	ADDI-TIONAL FEE ($)
AMENDMENT B	Total (37 CFR 1.16(i))	*	Minus	**	=	x =		OR	x =	
	Independent (37 CFR 1.16(h))	*	Minus	***	=	x =		OR	x =	
	Application Size Fee (37 CFR 1.16(s))									
	FIRST PRESENTATION OF MULTIPLE DEPENDENT CLAIM (37 CFR 1.16(j))					N/A		OR	N/A	
						TOTAL ADD'T FEE		OR	TOTAL ADD'T FEE	

* If the entry in column 1 is less than the entry in column 2, write "0" in column 3.
** If the "Highest Number Previously Paid For" IN THIS SPACE is less than 20, enter "20".
*** If the "Highest Number Previously Paid For" IN THIS SPACE is less than 3, enter "3".
The "Highest Number Previously Paid For" (Total or Independent) is the highest number found in the appropriate box in column 1.

This collection of information is required by 37 CFR 1.16. The information is required to obtain or retain a benefit by the public which is to file (and by the USPTO to process) an application. Confidentiality is governed by 35 U.S.C. 122 and 37 CFR 1.14. This collection is estimated to take 12 minutes to complete, including gathering, preparing, and submitting the completed application form to the USPTO. Time will vary depending upon the individual case. Any comments on the amount of time you require to complete this form and/or suggestions for reducing this burden, should be sent to the Chief Information Officer, U.S. Patent and Trademark Office, U.S. Department of Commerce, P.O. Box 1450, Alexandria, VA 22313-1450. DO NOT SEND FEES OR COMPLETED FORMS TO THIS ADDRESS. **SEND TO: Commissioner for Patents, P.O. Box 1450, Alexandria, VA 22313-1450.**

If you need assistance in completing the form, call 1-800-PTO-9199 and select option 2.