AO 120 (Rev. 08/10)

TO: Mail Stop 8 Director of the U.S. Patent and Trademark Office P.O. Box 1450 Alexandria, VA 22313-1450	REPORT ON THE FILING OR DETERMINATION OF AN ACTION REGARDING A PATENT OR TRADEMARK

In Compliance with 35 U.S.C. § 290 and/or 15 U.S.C. § 1116 you are hereby advised that a court action has been filed in the U.S. District Court Central District of California on the following

☐ Trademarks or ☑ Patents. (☐ the patent action involves 35 U.S.C. § 292.):

DOCKET NO.	DATE FILED	U.S. DISTRICT COURT
8:22-cv-00979	5/12/2022	Central District of California

PLAINTIFF	DEFENDANT
MGI DIGITAL TECHNOLOGY S.A.	DUPLO U.S.A. CORPORATION

	PATENT OR TRADEMARK NO.	DATE OF PATENT OR TRADEMARK	HOLDER OF PATENT OR TRADEMARK
1	8,506,031	8/13/2013	MGI DIGITAL TECHNOLOGY S.A.
2	8,783,806	7/22/2014	MGI DIGITAL TECHNOLOGY S.A.
3	RE45,067	8/12/2014	MGI DIGITAL TECHNOLOGY S.A.
4	9,422,449	8/23/2016	MGI DIGITAL TECHNOLOGY S.A.
5			

In the above---entitled case, the following patent(s)/ trademark(s) have been included:

DATE INCLUDED	INCLUDED BY ☐ Amendment ☐ Answer ☐ Cross Bill ☐ Other Pleading	
PATENT OR TRADEMARK NO.	DATE OF PATENT OR TRADEMARK	HOLDER OF PATENT OR TRADEMARK
1		
2		
3		
4		
5		

In the above---entitled case, the following decision has been rendered or judgement issued:

DECISION/JUDGEMENT

CLERK	(BY) DEPUTY CLERK	DATE

Copy 1---Upon initiation of action, mail this copy to Director Copy 3---Upon termination of action, mail this copy to Director
Copy 2---Upon filing document adding patent(s), mail this copy to Director Copy 4---Case file copy

UNITED STATES PATENT AND TRADEMARK OFFICE

UNITED STATES DEPARTMENT OF COMMERCE
United States Patent and Trademark Office
Address: COMMISSIONER FOR PATENTS
P.O. Box 1450
Alexandria, Virginia 22313-1450
www.uspto.gov

APPLICATION NO.	ISSUE DATE	PATENT NO.	ATTORNEY DOCKET NO.	CONFIRMATION NO.
12/649,765	08/13/2013	8506031	1013-070	6124

22429 7590 07/24/2013
LOWE HAUPTMAN HAM & BERNER, LLP
2318 Mill Road
Suite 1400
ALEXANDRIA, VA 22314

ISSUE NOTIFICATION

The projected patent number and issue date are specified above.

Determination of Patent Term Adjustment under 35 U.S.C. 154 (b)
(application filed on or after May 29, 2000)

The Patent Term Adjustment is 208 day(s). Any patent to issue from the above-identified application will include an indication of the adjustment on the front page.

If a Continued Prosecution Application (CPA) was filed in the above-identified application, the filing date that determines Patent Term Adjustment is the filing date of the most recent CPA.

Applicant will be able to obtain more detailed information by accessing the Patent Application Information Retrieval (PAIR) WEB site (http://pair.uspto.gov).

Any questions regarding the Patent Term Extension or Adjustment determination should be directed to the Office of Patent Legal Administration at (571)-272-7702. Questions relating to issue and publication fee payments should be directed to the Application Assistance Unit (AAU) of the Office of Data Management (ODM) at (571)-272-4200.

APPLICANT(s) (Please see PAIR WEB site http://pair.uspto.gov for additional applicants):

Edmond ABERGEL, Paris, FRANCE;

The United States represents the largest, most dynamic marketplace in the world and is an unparalleled location for business investment, innovation, and commercialization of new technologies. The USA offers tremendous resources and advantages for those who invest and manufacture goods here. Through SelectUSA, our nation works to encourage and facilitate business investment. To learn more about why the USA is the best country in the world to develop technology, manufacture products, and grow your business, visit SelectUSA.gov.

IR103 (Rev. 10/09)

PART B - FEE(S) TRANSMITTAL

Complete and send this form, together with applicable fee(s), to: Mail **Mail Stop ISSUE FEE**
Commissioner for Patents
P.O. Box 1450
Alexandria, Virginia 22313-1450
or Fax (571)-273-2885

INSTRUCTIONS: This form should be used for transmitting the ISSUE FEE and PUBLICATION FEE (if required). Blocks 1 through 5 should be completed where appropriate. All further correspondence including the Patent, advance orders and notification of maintenance fees will be mailed to the current correspondence address as indicated unless corrected below or directed otherwise in Block 1, by (a) specifying a new correspondence address; and/or (b) indicating a separate "FEE ADDRESS" for maintenance fee notifications.

CURRENT CORRESPONDENCE ADDRESS (Note: Use Block 1 for any change of address)

22429 7590 04/12/2013
LOWE HAUPTMAN HAM & BERNER, LLP
2318 Mill Road
Suite 1400
ALEXANDRIA, VA 22314

Note: A certificate of mailing can only be used for domestic mailings of the Fee(s) Transmittal. This certificate cannot be used for any other accompanying papers. Each additional paper, such as an assignment or formal drawing, must have its own certificate of mailing or transmission.

Certificate of Mailing or Transmission
I hereby certify that this Fee(s) Transmittal is being deposited with the United States Postal Service with sufficient postage for first class mail in an envelope addressed to the Mail Stop ISSUE FEE address above, or being facsimile transmitted to the USPTO (571) 273-2885, on the date indicated below.

(Depositor's name)
(Signature)
(Date)

APPLICATION NO.	FILING DATE	FIRST NAMED INVENTOR	ATTORNEY DOCKET NO.	CONFIRMATION NO.
12/649,765	12/30/2009	Edmond ABERGEL	1013-070	6124

TITLE OF INVENTION: INK JET PRINTER AND METHOD FOR DEPOSITING A PROTECTIVE LAYER ON A SUBSTRATE

APPLN. TYPE	ENTITY STATUS	ISSUE FEE DUE	PUBLICATION FEE DUE	PREV. PAID ISSUE FEE	TOTAL FEE(S) DUE	DATE DUE
nonprovisional	SMALL	$890	$300	$0	$1190	07/12/2013

EXAMINER	ART UNIT	CLASS-SUBCLASS
DO, AN H	2853	347-010000

1. Change of correspondence address or indication of "Fee Address" (37 CFR 1.363).
- ❑ Change of correspondence address (or Change of Correspondence Address form PTO/SB/122) attached.
- ❑ "Fee Address" indication (or "Fee Address" Indication form PTO/SB/47; Rev 03-02 or more recent) attached. **Use of a Customer Number is required.**

2. For printing on the patent front page, list
(1) the names of up to 3 registered patent attorneys or agents OR, alternatively,
(2) the name of a single firm (having as a member a registered attorney or agent) and the names of up to 2 registered patent attorneys or agents. If no name is listed, no name will be printed.

1 Lowe Hauptman
2 Ham & Berner, LLP
3

3. ASSIGNEE NAME AND RESIDENCE DATA TO BE PRINTED ON THE PATENT (print or type)

PLEASE NOTE: Unless an assignee is identified below, no assignee data will appear on the patent. If an assignee is identified below, the document has been filed for recordation as set forth in 37 CFR 3.11. Completion of this form is NOT a substitute for filing an assignment.

(A) NAME OF ASSIGNEE: M.G.I. USA, INC.
(B) RESIDENCE: (CITY and STATE OR COUNTRY): MELBOURNE, FLORIDA

Please check the appropriate assignee category or categories (will not be printed on the patent) : ❑ Individual ☒ Corporation or other private group entity ❑ Government

4a. The following fee(s) are submitted:
- ☒ Issue Fee
- ☒ Publication Fee (No small entity discount permitted)
- ❑ Advance Order - # of Copies _____

4b. Payment of Fee(s): **(Please first reapply any previously paid issue fee shown above)**
- ❑ A check is enclosed.
- ☒ Payment by credit card. Form PTO-2038 is attached.
- ☒ The Director is hereby authorized to charge the required fee(s), any deficiency, or credit any overpayment, to Deposit Account Number 071337 (enclose an extra copy of this form).

5. **Change in Entity Status** (from status indicated above)

❑ Applicant certifying micro entity status. See 37 CFR 1.29	NOTE: Absent a valid certification of Micro Entity Status (see form PTO/SB/15A and 15B), issue fee payment in the micro entity amount will not be accepted at the risk of application abandonment.
❑ Applicant asserting small entity status. See 37 CFR 1.27	NOTE: If the application was previously under micro entity status, checking this box will be taken to be a notification of loss of entitlement to micro entity status.
❑ Applicant changing to regular undiscounted fee status.	NOTE: Checking this box will be taken to be a notification of loss of entitlement to small or micro entity status, as applicable.

NOTE: The Issue Fee and Publication Fee (if required) will not be accepted from anyone other than the applicant; a registered attorney or agent; or the assignee or other party in interest as shown by the records of the United States Patent and Trademark Office.

Authorized Signature /Randy A. Noranbrock/ Date July 12, 2013

Typed or printed name Randy A. Noranbrock Registration No. 42940

This collection of information is required by 37 CFR 1.311. The information is required to obtain or retain a benefit by the public which is to file (and by the USPTO to process) an application. Confidentiality is governed by 35 U.S.C. 122 and 37 CFR 1.14. This collection is estimated to take 12 minutes to complete, including gathering, preparing, and submitting the completed application form to the USPTO. Time will vary depending upon the individual case. Any comments on the amount of time you require to complete this form and/or suggestions for reducing this burden, should be sent to the Chief Information Officer, U.S. Patent and Trademark Office, U.S. Department of Commerce, P.O. Box 1450, Alexandria, Virginia 22313-1450. DO NOT SEND FEES OR COMPLETED FORMS TO THIS ADDRESS. SEND TO: Commissioner for Patents, P.O. Box 1450, Alexandria, Virginia 22313-1450.

Under the Paperwork Reduction Act of 1995, no persons are required to respond to a collection of information unless it displays a valid OMB control number.

Electronic Patent Application Fee Transmittal

Application Number:	12649765
Filing Date:	30-Dec-2009
Title of Invention:	INK JET PRINTER AND METHOD FOR DEPOSITING A PROTECTIVE LAYER ON A SUBSTRATE
First Named Inventor/Applicant Name:	Edmond ABERGEL
Filer:	Randy A. Noranbrock/Elizabeth Anastasio
Attorney Docket Number:	1013-070

Filed as Small Entity

Utility under 35 USC 111(a) Filing Fees

Description	Fee Code	Quantity	Amount	Sub-Total in USD($)
Basic Filing:				
Pages:				
Claims:				
Miscellaneous-Filing:				
Petition:				
Patent-Appeals-and-Interference:				
Post-Allowance-and-Post-Issuance:				
Utility Appl Issue Fee	2501	1	890	890
Publ. Fee- Early, Voluntary, or Normal	1504	1	300	300

Description	Fee Code	Quantity	Amount	Sub-Total in USD($)
Extension-of-Time:				
Miscellaneous:				
			Total in USD ($)	**1190**

Electronic Acknowledgement Receipt

EFS ID:	16298059
Application Number:	12649765
International Application Number:	
Confirmation Number:	6124
Title of Invention:	INK JET PRINTER AND METHOD FOR DEPOSITING A PROTECTIVE LAYER ON A SUBSTRATE
First Named Inventor/Applicant Name:	Edmond ABERGEL
Customer Number:	22429
Filer:	Randy A. Noranbrock/Elizabeth Anastasio
Filer Authorized By:	Randy A. Noranbrock
Attorney Docket Number:	1013-070
Receipt Date:	12-JUL-2013
Filing Date:	30-DEC-2009
Time Stamp:	11:16:49
Application Type:	Utility under 35 USC 111(a)

Payment information:

Submitted with Payment	yes
Payment Type	Credit Card
Payment was successfully received in RAM	$1190
RAM confirmation Number	9323
Deposit Account	
Authorized User	

File Listing:

Document Number	Document Description	File Name	File Size(Bytes)/ Message Digest	Multi Part /.zip	Pages (if appl.)

1	Issue Fee Payment (PTO-85B)	AsFiled_IssueFee.pdf	113633 207fb5d3f3db5a960428abd3595afa39e351016f	no	2
Warnings:					
Information:					
2	Fee Worksheet (SB06)	fee-info.pdf	32113 a98eb50bd0448b3dfe9de8bd41f7f0d6334116eb	no	2
Warnings:					
Information:					
			Total Files Size (in bytes):	145746	

This Acknowledgement Receipt evidences receipt on the noted date by the USPTO of the indicated documents, characterized by the applicant, and including page counts, where applicable. It serves as evidence of receipt similar to a Post Card, as described in MPEP 503.

<u>New Applications Under 35 U.S.C. 111</u>
If a new application is being filed and the application includes the necessary components for a filing date (see 37 CFR 1.53(b)-(d) and MPEP 506), a Filing Receipt (37 CFR 1.54) will be issued in due course and the date shown on this Acknowledgement Receipt will establish the filing date of the application.

<u>National Stage of an International Application under 35 U.S.C. 371</u>
If a timely submission to enter the national stage of an international application is compliant with the conditions of 35 U.S.C. 371 and other applicable requirements a Form PCT/DO/EO/903 indicating acceptance of the application as a national stage submission under 35 U.S.C. 371 will be issued in addition to the Filing Receipt, in due course.

<u>New International Application Filed with the USPTO as a Receiving Office</u>
If a new international application is being filed and the international application includes the necessary components for an international filing date (see PCT Article 11 and MPEP 1810), a Notification of the International Application Number and of the International Filing Date (Form PCT/RO/105) will be issued in due course, subject to prescriptions concerning national security, and the date shown on this Acknowledgement Receipt will establish the international filing date of the application.

UNITED STATES PATENT AND TRADEMARK OFFICE

UNITED STATES DEPARTMENT OF COMMERCE
United States Patent and Trademark Office
Address: COMMISSIONER FOR PATENTS
P.O. Box 1450
Alexandria, Virginia 22313-1450
www.uspto.gov

NOTICE OF ALLOWANCE AND FEE(S) DUE

22429 7590 04/12/2013
LOWE HAUPTMAN HAM & BERNER, LLP
2318 Mill Road
Suite 1400
ALEXANDRIA, VA 22314

EXAMINER
DO, AN H

ART UNIT	PAPER NUMBER
2853	

DATE MAILED: 04/12/2013

APPLICATION NO.	FILING DATE	FIRST NAMED INVENTOR	ATTORNEY DOCKET NO.	CONFIRMATION NO.
12/649,765	12/30/2009	Edmond ABERGEL	1013-070	6124

TITLE OF INVENTION: INK JET PRINTER AND METHOD FOR DEPOSITING A PROTECTIVE LAYER ON A SUBSTRATE

APPLN. TYPE	ENTITY STATUS	ISSUE FEE DUE	PUBLICATION FEE DUE	PREV. PAID ISSUE FEE	TOTAL FEE(S) DUE	DATE DUE
nonprovisional	SMALL	$890	$300	$0	$1190	07/12/2013

THE APPLICATION IDENTIFIED ABOVE HAS BEEN EXAMINED AND IS ALLOWED FOR ISSUANCE AS A PATENT. PROSECUTION ON THE MERITS IS CLOSED. THIS NOTICE OF ALLOWANCE IS NOT A GRANT OF PATENT RIGHTS. THIS APPLICATION IS SUBJECT TO WITHDRAWAL FROM ISSUE AT THE INITIATIVE OF THE OFFICE OR UPON PETITION BY THE APPLICANT. SEE 37 CFR 1.313 AND MPEP 1308.

THE ISSUE FEE AND PUBLICATION FEE (IF REQUIRED) MUST BE PAID WITHIN THREE MONTHS FROM THE MAILING DATE OF THIS NOTICE OR THIS APPLICATION SHALL BE REGARDED AS ABANDONED. THIS STATUTORY PERIOD CANNOT BE EXTENDED. SEE 35 U.S.C. 151. THE ISSUE FEE DUE INDICATED ABOVE DOES NOT REFLECT A CREDIT FOR ANY PREVIOUSLY PAID ISSUE FEE IN THIS APPLICATION. IF AN ISSUE FEE HAS PREVIOUSLY BEEN PAID IN THIS APPLICATION (AS SHOWN ABOVE), THE RETURN OF PART B OF THIS FORM WILL BE CONSIDERED A REQUEST TO REAPPLY THE PREVIOUSLY PAID ISSUE FEE TOWARD THE ISSUE FEE NOW DUE.

HOW TO REPLY TO THIS NOTICE:

I. Review the ENTITY STATUS shown above. If the ENTITY STATUS is shown as SMALL or MICRO, verify whether entitlement to that entity status still applies.

If the ENTITY STATUS is the same as shown above, pay the TOTAL FEE(S) DUE shown above.

If the ENTITY STATUS is changed from that shown above, on PART B - FEE(S) TRANSMITTAL, complete section number 5 titled "Change in Entity Status (from status indicated above)".

For purposes of this notice, small entity fees are 1/2 the amount of undiscounted fees, and micro entity fees are 1/2 the amount of small entity fees.

II. PART B - FEE(S) TRANSMITTAL, or its equivalent, must be completed and returned to the United States Patent and Trademark Office (USPTO) with your ISSUE FEE and PUBLICATION FEE (if required). If you are charging the fee(s) to your deposit account, section "4b" of Part B - Fee(s) Transmittal should be completed and an extra copy of the form should be submitted. If an equivalent of Part B is filed, a request to reapply a previously paid issue fee must be clearly made, and delays in processing may occur due to the difficulty in recognizing the paper as an equivalent of Part B.

III. All communications regarding this application must give the application number. Please direct all communications prior to issuance to Mail Stop ISSUE FEE unless advised to the contrary.

IMPORTANT REMINDER: Utility patents issuing on applications filed on or after Dec. 12, 1980 may require payment of maintenance fees. It is patentee's responsibility to ensure timely payment of maintenance fees when due.

PART B - FEE(S) TRANSMITTAL

Complete and send this form, together with applicable fee(s), to: Mail **Mail Stop ISSUE FEE**
Commissioner for Patents
P.O. Box 1450
Alexandria, Virginia 22313-1450
or Fax (571)-273-2885

INSTRUCTIONS: This form should be used for transmitting the ISSUE FEE and PUBLICATION FEE (if required). Blocks 1 through 5 should be completed where appropriate. All further correspondence including the Patent, advance orders and notification of maintenance fees will be mailed to the current correspondence address as indicated unless corrected below or directed otherwise in Block 1, by (a) specifying a new correspondence address; and/or (b) indicating a separate "FEE ADDRESS" for maintenance fee notifications.

CURRENT CORRESPONDENCE ADDRESS (Note: Use Block 1 for any change of address)

22429 7590 04/12/2013
LOWE HAUPTMAN HAM & BERNER, LLP
2318 Mill Road
Suite 1400
ALEXANDRIA, VA 22314

Note: A certificate of mailing can only be used for domestic mailings of the Fee(s) Transmittal. This certificate cannot be used for any other accompanying papers. Each additional paper, such as an assignment or formal drawing, must have its own certificate of mailing or transmission.

Certificate of Mailing or Transmission

I hereby certify that this Fee(s) Transmittal is being deposited with the United States Postal Service with sufficient postage for first class mail in an envelope addressed to the Mail Stop ISSUE FEE address above, or being facsimile transmitted to the USPTO (571) 273-2885, on the date indicated below.

(Depositor's name)
(Signature)
(Date)

APPLICATION NO.	FILING DATE	FIRST NAMED INVENTOR	ATTORNEY DOCKET NO.	CONFIRMATION NO.
12/649,765	12/30/2009	Edmond ABERGEL	1013-070	6124

TITLE OF INVENTION: INK JET PRINTER AND METHOD FOR DEPOSITING A PROTECTIVE LAYER ON A SUBSTRATE

APPLN. TYPE	ENTITY STATUS	ISSUE FEE DUE	PUBLICATION FEE DUE	PREV. PAID ISSUE FEE	TOTAL FEE(S) DUE	DATE DUE
nonprovisional	SMALL	$890	$300	$0	$1190	07/12/2013

EXAMINER	ART UNIT	CLASS-SUBCLASS
DO, AN H	2853	347-010000

1. Change of correspondence address or indication of "Fee Address" (37 CFR 1.363).

❑ Change of correspondence address (or Change of Correspondence Address form PTO/SB/122) attached.

❑ "Fee Address" indication (or "Fee Address" Indication form PTO/SB/47; Rev 03-02 or more recent) attached. **Use of a Customer Number is required.**

2. For printing on the patent front page, list

(1) the names of up to 3 registered patent attorneys or agents OR, alternatively,

(2) the name of a single firm (having as a member a registered attorney or agent) and the names of up to 2 registered patent attorneys or agents. If no name is listed, no name will be printed.

1_____
2_____
3_____

3. ASSIGNEE NAME AND RESIDENCE DATA TO BE PRINTED ON THE PATENT (print or type)

PLEASE NOTE: Unless an assignee is identified below, no assignee data will appear on the patent. If an assignee is identified below, the document has been filed for recordation as set forth in 37 CFR 3.11. Completion of this form is NOT a substitute for filing an assignment.

(A) NAME OF ASSIGNEE (B) RESIDENCE: (CITY and STATE OR COUNTRY)

Please check the appropriate assignee category or categories (will not be printed on the patent) : ❑ Individual ❑ Corporation or other private group entity ❑ Government

4a. The following fee(s) are submitted:

❑ Issue Fee
❑ Publication Fee (No small entity discount permitted)
❑ Advance Order - # of Copies _____

4b. Payment of Fee(s): **(Please first reapply any previously paid issue fee shown above)**

❑ A check is enclosed.
❑ Payment by credit card. Form PTO-2038 is attached.
❑ The Director is hereby authorized to charge the required fee(s), any deficiency, or credit any overpayment, to Deposit Account Number _____ (enclose an extra copy of this form).

5. **Change in Entity Status** (from status indicated above)

❑ Applicant certifying micro entity status. See 37 CFR 1.29	NOTE: Absent a valid certification of Micro Entity Status (see form PTO/SB/15A and 15B), issue fee payment in the micro entity amount will not be accepted at the risk of application abandonment.
❑ Applicant asserting small entity status. See 37 CFR 1.27	NOTE: If the application was previously under micro entity status, checking this box will be taken to be a notification of loss of entitlement to micro entity status.
❑ Applicant changing to regular undiscounted fee status.	NOTE: Checking this box will be taken to be a notification of loss of entitlement to small or micro entity status, as applicable.

NOTE: The Issue Fee and Publication Fee (if required) will not be accepted from anyone other than the applicant; a registered attorney or agent; or the assignee or other party in interest as shown by the records of the United States Patent and Trademark Office.

Authorized Signature _____ Date _____

Typed or printed name _____ Registration No. _____

This collection of information is required by 37 CFR 1.311. The information is required to obtain or retain a benefit by the public which is to file (and by the USPTO to process) an application. Confidentiality is governed by 35 U.S.C. 122 and 37 CFR 1.14. This collection is estimated to take 12 minutes to complete, including gathering, preparing, and submitting the completed application form to the USPTO. Time will vary depending upon the individual case. Any comments on the amount of time you require to complete this form and/or suggestions for reducing this burden, should be sent to the Chief Information Officer, U.S. Patent and Trademark Office, U.S. Department of Commerce, P.O. Box 1450, Alexandria, Virginia 22313-1450. DO NOT SEND FEES OR COMPLETED FORMS TO THIS ADDRESS. SEND TO: Commissioner for Patents, P.O. Box 1450, Alexandria, Virginia 22313-1450.

Under the Paperwork Reduction Act of 1995, no persons are required to respond to a collection of information unless it displays a valid OMB control number.

UNITED STATES PATENT AND TRADEMARK OFFICE

UNITED STATES DEPARTMENT OF COMMERCE
United States Patent and Trademark Office
Address: COMMISSIONER FOR PATENTS
P.O. Box 1450
Alexandria, Virginia 22313-1450
www.uspto.gov

APPLICATION NO.	FILING DATE	FIRST NAMED INVENTOR	ATTORNEY DOCKET NO.	CONFIRMATION NO.
12/649,765	12/30/2009	Edmond ABERGEL	1013-070	6124

22429 7590 04/12/2013
LOWE HAUPTMAN HAM & BERNER, LLP
2318 Mill Road
Suite 1400
ALEXANDRIA, VA 22314

EXAMINER
DO, AN H

ART UNIT	PAPER NUMBER
2853	

DATE MAILED: 04/12/2013

Determination of Patent Term Adjustment under 35 U.S.C. 154 (b)
(application filed on or after May 29, 2000)

The Patent Term Adjustment to date is 131 day(s). If the issue fee is paid on the date that is three months after the mailing date of this notice and the patent issues on the Tuesday before the date that is 28 weeks (six and a half months) after the mailing date of this notice, the Patent Term Adjustment will be 131 day(s).

If a Continued Prosecution Application (CPA) was filed in the above-identified application, the filing date that determines Patent Term Adjustment is the filing date of the most recent CPA.

Applicant will be able to obtain more detailed information by accessing the Patent Application Information Retrieval (PAIR) WEB site (http://pair.uspto.gov).

Any questions regarding the Patent Term Extension or Adjustment determination should be directed to the Office of Patent Legal Administration at (571)-272-7702. Questions relating to issue and publication fee payments should be directed to the Customer Service Center of the Office of Patent Publication at 1-(888)-786-0101 or (571)-272-4200.

Privacy Act Statement

The Privacy Act of 1974 (P.L. 93-579) requires that you be given certain information in connection with your submission of the attached form related to a patent application or patent. Accordingly, pursuant to the requirements of the Act, please be advised that: (1) the general authority for the collection of this information is 35 U.S.C. 2(b)(2); (2) furnishing of the information solicited is voluntary; and (3) the principal purpose for which the information is used by the U.S. Patent and Trademark Office is to process and/or examine your submission related to a patent application or patent. If you do not furnish the requested information, the U.S. Patent and Trademark Office may not be able to process and/or examine your submission, which may result in termination of proceedings or abandonment of the application or expiration of the patent.

The information provided by you in this form will be subject to the following routine uses:

1. The information on this form will be treated confidentially to the extent allowed under the Freedom of Information Act (5 U.S.C. 552) and the Privacy Act (5 U.S.C 552a). Records from this system of records may be disclosed to the Department of Justice to determine whether disclosure of these records is required by the Freedom of Information Act.
2. A record from this system of records may be disclosed, as a routine use, in the course of presenting evidence to a court, magistrate, or administrative tribunal, including disclosures to opposing counsel in the course of settlement negotiations.
3. A record in this system of records may be disclosed, as a routine use, to a Member of Congress submitting a request involving an individual, to whom the record pertains, when the individual has requested assistance from the Member with respect to the subject matter of the record.
4. A record in this system of records may be disclosed, as a routine use, to a contractor of the Agency having need for the information in order to perform a contract. Recipients of information shall be required to comply with the requirements of the Privacy Act of 1974, as amended, pursuant to 5 U.S.C. 552a(m).
5. A record related to an International Application filed under the Patent Cooperation Treaty in this system of records may be disclosed, as a routine use, to the International Bureau of the World Intellectual Property Organization, pursuant to the Patent Cooperation Treaty.
6. A record in this system of records may be disclosed, as a routine use, to another federal agency for purposes of National Security review (35 U.S.C. 181) and for review pursuant to the Atomic Energy Act (42 U.S.C. 218(c)).
7. A record from this system of records may be disclosed, as a routine use, to the Administrator, General Services, or his/her designee, during an inspection of records conducted by GSA as part of that agency's responsibility to recommend improvements in records management practices and programs, under authority of 44 U.S.C. 2904 and 2906. Such disclosure shall be made in accordance with the GSA regulations governing inspection of records for this purpose, and any other relevant (i.e., GSA or Commerce) directive. Such disclosure shall not be used to make determinations about individuals.
8. A record from this system of records may be disclosed, as a routine use, to the public after either publication of the application pursuant to 35 U.S.C. 122(b) or issuance of a patent pursuant to 35 U.S.C. 151. Further, a record may be disclosed, subject to the limitations of 37 CFR 1.14, as a routine use, to the public if the record was filed in an application which became abandoned or in which the proceedings were terminated and which application is referenced by either a published application, an application open to public inspection or an issued patent.
9. A record from this system of records may be disclosed, as a routine use, to a Federal, State, or local law enforcement agency, if the USPTO becomes aware of a violation or potential violation of law or regulation.

Notice of Allowability	Application No. 12/649,765	Applicant(s) ABERGEL, EDMOND	
	Examiner AN DO	Art Unit 2853	AIA (First Inventor to File) Status No

-- The MAILING DATE of this communication appears on the cover sheet with the correspondence address--

All claims being allowable, PROSECUTION ON THE MERITS IS (OR REMAINS) CLOSED in this application. If not included herewith (or previously mailed), a Notice of Allowance (PTOL-85) or other appropriate communication will be mailed in due course. **THIS NOTICE OF ALLOWABILITY IS NOT A GRANT OF PATENT RIGHTS.** This application is subject to withdrawal from issue at the initiative of the Office or upon petition by the applicant. See 37 CFR 1.313 and MPEP 1308.

1. ☒ This communication is responsive to *RCE and Amendment filed on 18 March 2013*.
   ☐ A declaration(s)/affidavit(s) under **37 CFR 1.130(b)** was/were filed on_____.

2. ☐ An election was made by the applicant in response to a restriction requirement set forth during the interview on _____; the restriction requirement and election have been incorporated into this action.

3. ☒ The allowed claim(s) is/are *1,5-9,11-14,18-22,24-26 and 28-34*. As a result of the allowed claim(s), you may be eligible to benefit from the **Patent Prosecution Highway** program at a participating intellectual property office for the corresponding application. For more information, please see http://www.uspto.gov/patents/init_events/pph/index.jsp or send an inquiry to PPHfeedback@uspto.gov .

4. ☒ Acknowledgment is made of a claim for foreign priority under 35 U.S.C. § 119(a)-(d) or (f).

   Certified copies:

   a) ☒ All b) ☐ Some *c) ☐ None of the:
   1. ☒ Certified copies of the priority documents have been received.
   2. ☐ Certified copies of the priority documents have been received in Application No. _____ .
   3. ☐ Copies of the certified copies of the priority documents have been received in this national stage application from the International Bureau (PCT Rule 17.2(a)).

   * Certified copies not received: _____.

   Interim copies:

   a) ☐ All b) ☐ Some c) ☐ None of the: Interim copies of the priority documents have been received.

Applicant has THREE MONTHS FROM THE "MAILING DATE" of this communication to file a reply complying with the requirements noted below. Failure to timely comply will result in ABANDONMENT of this application.
THIS THREE-MONTH PERIOD IS NOT EXTENDABLE.

5. ☐ CORRECTED DRAWINGS (as "replacement sheets") must be submitted.
   ☐ including changes required by the attached Examiner's Amendment / Comment or in the Office action of Paper No./Mail Date _____.

   Identifying indicia such as the application number (see 37 CFR 1.84(c)) should be written on the drawings in the front (not the back) of each sheet. Replacement sheet(s) should be labeled as such in the header according to 37 CFR 1.121(d).

6. ☐ DEPOSIT OF and/or INFORMATION about the deposit of BIOLOGICAL MATERIAL must be submitted. Note the attached Examiner's comment regarding REQUIREMENT FOR THE DEPOSIT OF BIOLOGICAL MATERIAL.

Attachment(s)

1. ☐ Notice of References Cited (PTO-892)
2. ☐ Information Disclosure Statements (PTO/SB/08), Paper No./Mail Date _____
3. ☐ Examiner's Comment Regarding Requirement for Deposit of Biological Material
4. ☐ Interview Summary (PTO-413), Paper No./Mail Date _____ .
5. ☐ Examiner's Amendment/Comment
6. ☒ Examiner's Statement of Reasons for Allowance
7. ☐ Other _____.

/An H. Do/
Primary Examiner, Art Unit 2853

DETAILED ACTION

The RCE and Amendment filed on 18 March 2013 have been acknowledged.

Continued Examination Under 37 CFR 1.114

1. A request for continued examination under 37 CFR 1.114, including the fee set forth in 37 CFR 1.17(e), was filed in this application after final rejection. Since this application is eligible for continued examination under 37 CFR 1.114, and the fee set forth in 37 CFR 1.17(e) has been timely paid, the finality of the previous Office action has been withdrawn pursuant to 37 CFR 1.114. Applicant's submission filed on 18 March 2013 has been entered.

Allowable Subject Matter

2. Claims 1, 5-9, 11-14, 18-22, 24-26 and 28-34 are allowed over prior arts as discussed in Applicant's Remarks filed on 18 March 2013.

Contact Information

3. Any inquiry concerning this communication or earlier communications from the examiner should be directed to AN DO whose telephone number is (571)272-2143. The examiner can normally be reached on Monday-Friday (Flexible).

If attempts to reach the examiner by telephone are unsuccessful, the examiner's supervisor, Stephen D. Meier can be reached on 571-272-2149. The fax phone number for the organization where this application or proceeding is assigned is 571-273-8300.

Information regarding the status of an application may be obtained from the Patent Application Information Retrieval (PAIR) system. Status information for published applications may be obtained from either Private PAIR or Public PAIR. Status information for unpublished applications is available through Private PAIR only. For more information about the PAIR system, see http://pair-direct.uspto.gov. Should you have questions on access to the Private PAIR system, contact the Electronic Business Center (EBC) at 866-217-9197 (toll-free). If you would like assistance from a USPTO Customer Service Representative or access to the automated information system, call 800-786-9199 (IN USA OR CANADA) or 571-272-1000.

/An H. Do/
Primary Examiner, Art Unit 2853

Issue Classification	**Application/Control No.** 12649765	**Applicant(s)/Patent Under Reexamination** ABERGEL, EDMOND
	Examiner AN DO	**Art Unit** 2853

CPC

Symbol				Type	Version
		/			
		/			
		/			
		/			
		/			
		/			
		/			
		/			
		/			
		/			
		/			
		/			
		/			
		/			
		/			

CPC Combination Sets

Symbol				Type	Set	Ranking	Version
		/					
		/					

US ORIGINAL CLASSIFICATION

CLASS	SUBCLASS
347	10

CROSS REFERENCE(S)

CLASS	SUBCLASS (ONE SUBCLASS PER BLOCK)				

INTERNATIONAL CLASSIFICATION

CLAIMED					NON-CLAIMED				
B	4	1	J	2 / 01 (2006.01.01)					

NONE (Assistant Examiner) (Date)	**Total Claims Allowed:** 25	
/AN DO/ Primary Examiner.Art Unit 2853 4/8/2013 (Primary Examiner) (Date)	O.G. Print Claim(s) 1	O.G. Print Figure 2

U.S. Patent and Trademark Office Part of Paper No. 20130404

Issue Classification	Application/Control No.	Applicant(s)/Patent Under Reexamination
	12649765	ABERGEL, EDMOND
	Examiner	**Art Unit**
	AN DO	2853

NONE (Assistant Examiner)	(Date)	**Total Claims Allowed:** 25	
/AN DO/ Primary Examiner.Art Unit 2853 (Primary Examiner)	4/8/2013 (Date)	O.G. Print Claim(s) 1	O.G. Print Figure 2

U.S. Patent and Trademark Office

Part of Paper No. 20130404

Issue Classification	Application/Control No.	Applicant(s)/Patent Under Reexamination
	12649765	ABERGEL, EDMOND
	Examiner	**Art Unit**
	AN DO	2853

☐ Claims renumbered in the same order as presented by applicant ☐ CPA ☐ T.D. ☐ R.1.47

Final	Original	Final	Original	Final	Original	Final	Original	Final	Original	Final	Original	Final	Original	Final	Original
1	1	-	17	23	33										
-	2	13	18	22	34										
-	3	14	19												
-	4	15	20												
2	5	16	21												
3	6	17	22												
4	7	-	23												
5	8	18	24												
6	9	19	25												
-	10	20	26												
7	11	-	27												
8	12	21	28												
9	13	10	29												
12	14	11	30												
-	15	24	31												
-	16	25	32												

NONE (Assistant Examiner)	(Date)	**Total Claims Allowed:** 25	
/AN DO/ Primary Examiner.Art Unit 2853 (Primary Examiner)	4/8/2013 (Date)	O.G. Print Claim(s) 1	O.G. Print Figure 2

U.S. Patent and Trademark Office Part of Paper No. 20130404

UNITED STATES PATENT AND TRADEMARK OFFICE

UNITED STATES DEPARTMENT OF COMMERCE
United States Patent and Trademark Office
Address: COMMISSIONER FOR PATENTS
P.O. Box 1450
Alexandria, Virginia 22313-1450
www.uspto.gov

BIB DATA SHEET

CONFIRMATION NO. 6124

SERIAL NUMBER	FILING or 371(c) DATE	CLASS	GROUP ART UNIT	ATTORNEY DOCKET NO.
12/649,765	12/30/2009 **RULE**	347	2853	1013-070

APPLICANTS
Edmond ABERGEL, Paris, FRANCE;

**** CONTINUING DATA ***************************

**** FOREIGN APPLICATIONS ***************************
FRANCE 08 07500 12/30/2008

**** IF REQUIRED, FOREIGN FILING LICENSE GRANTED **** ** SMALL ENTITY **
01/14/2010

Foreign Priority claimed	35 USC 119(a-d) conditions met	Verified and Acknowledged	STATE OR COUNTRY	SHEETS DRAWINGS	TOTAL CLAIMS	INDEPENDENT CLAIMS
☑ Yes ☐ No	☑ Yes ☐ No	/AN H DO/ Examiner's Signature ☐ Met after Allowance Initials	FRANCE	2	~~28~~ 25	2

ADDRESS

LOWE HAUPTMAN HAM & BERNER, LLP
2318 Mill Road
Suite 1400
ALEXANDRIA, VA 22314
UNITED STATES

TITLE

INK JET PRINTER AND METHOD FOR DEPOSITING A PROTECTIVE LAYER ON A SUBSTRATE

FILING FEE RECEIVED		
765	FEES: Authority has been given in Paper No._____ to charge/credit DEPOSIT ACCOUNT No._____ for following:	☐ All Fees ☐ 1.16 Fees (Filing) ☐ 1.17 Fees (Processing Ext. of time) ☐ 1.18 Fees (Issue) ☐ Other _____ ☐ Credit

BIB (Rev. 05/07).

Search Notes	Application/Control No.	Applicant(s)/Patent Under Reexamination
	12649765	ABERGEL, EDMOND
	Examiner	**Art Unit**
	AN DO	2853

CPC- SEARCHED		
Symbol	**Date**	**Examiner**
B41J2/04563	4/8/2013	AD
B41J2/04588	4/8/2013	AD

CPC COMBINATION SETS - SEARCHED		
Symbol	**Date**	**Examiner**

US CLASSIFICATION SEARCHED			
Class	**Subclass**	**Date**	**Examiner**
347	5-7, 9-11, 14, 17, 19, 68	1/3/2012	AD
	(Updated Above)	(4/8/2013)	(AD)

SEARCH NOTES		
Search Notes	**Date**	**Examiner**
Updated EAST Text Search	4/8/2013	AD

INTERFERENCE SEARCH			
US Class/ CPC Symbol	**US Subclass / CPC Group**	**Date**	**Examiner**
347	10	4/8/2013	AD
	PGPUB Text Search - See Interference Search History Printout	4/8/2013	AD

	/AN DO/ Primary Examiner.Art Unit 2853

/A.D./ 4/8/2013

EAST Search History

EAST Search History (Prior Art)

Ref #	Hits	Search Query	DBs	Default Operator	Plurals	Time Stamp
L1	1543	347/5.ccls.	US-PGPUB; USPAT; USOCR; FPRS; EPO; JPO; DERWENT; IBM_TDB	OR	ON	2013/04/06 03:47
L2	792	347/6.ccls.	US-PGPUB; USPAT; USOCR; FPRS; EPO; JPO; DERWENT; IBM_TDB	OR	ON	2013/04/06 03:47
L3	2278	347/9.ccls.	US-PGPUB; USPAT; USOCR; FPRS; EPO; JPO; DERWENT; IBM_TDB	OR	ON	2013/04/06 03:47
L4	1310	347/10.ccls.	US-PGPUB; USPAT; USOCR; FPRS; EPO; JPO; DERWENT; IBM_TDB	OR	ON	2013/04/06 03:47
L5	3070	347/68.ccls.	US-PGPUB; USPAT; USOCR; FPRS; EPO; JPO; DERWENT; IBM_TDB	OR	ON	2013/04/06 03:47
L6	1	1 and 2 and (3 4) and 5	US-PGPUB; USPAT; USOCR; FPRS; EPO; JPO; DERWENT; IBM_TDB	OR	ON	2013/04/06 03:48
L11	34	((head printhead ejector) and (waveform with shape$1 with (droplet$1 drop$1)) and (ink with viscosity with temperature))	US-PGPUB; USPAT; USOCR; FPRS; EPO; JPO; DERWENT; IBM_TDB	OR	ON	2013/04/06 04:53

EAST Search History (Interference)

Ref #	Hits	Search Query	DBs	Default Operator	Plurals	Time Stamp
L12	0	((head printhead ejector) and (waveform with shape$1 with (droplet$1 drop$1)) and (ink with viscosity with temperature)).clm.	US-PGPUB	OR	ON	2013/04/06 04:58
L13	1	((head printhead ejector) and (waveform with (droplet$1 drop$1)) and (ink with viscosity with temperature)).clm.	US-PGPUB	OR	ON	2013/04/06 05:00
L14	1	((head printhead ejector) and (waveform with (droplet$1 drop$1)) and (ink same viscosity same temperature)).clm.	US-PGPUB	OR	ON	2013/04/06 05:01

L15	1	((head printhead ejector) and waveform and (ink with viscosity with temperature)).clm.	US-PGPUB	OR	ON	2013/04/06 05:01

4/6/2013 5:02:34 AM
C:\Users\ado1\Documents\EAST\Workspaces\12649765.wsp

Index of Claims	Application/Control No.	Applicant(s)/Patent Under Reexamination
	12649765	ABERGEL, EDMOND
	Examiner	**Art Unit**
	AN DO	2853

✓	Rejected	-	Cancelled	N	Non-Elected	A	Appeal
=	Allowed	÷	Restricted	I	Interference	O	Objected

☐ Claims renumbered in the same order as presented by applicant ☐ CPA ☐ T.D. ☐ R.1.47

CLAIM		DATE								
Final	Original	01/03/2012	09/07/2012	04/08/2013						
1	1	✓	✓	=						
-	2	✓	✓	-						
-	3	✓	-	-						
-	4	✓	✓	-						
2	5	✓	✓	=						
3	6	✓	✓	=						
4	7	✓	✓	=						
5	8	✓	✓	=						
6	9	✓	✓	=						
-	10	✓	-	-						
7	11	O	✓	=						
8	12	✓	✓	=						
9	13	✓	✓	=						
12	14	✓	✓	=						
-	15	✓	✓	-						
-	16	✓	-	-						
-	17	✓	✓	-						
13	18	✓	✓	=						
14	19	✓	✓	=						
15	20	✓	✓	=						
16	21	✓	✓	=						
17	22	✓	✓	=						
-	23	✓	-	-						
18	24	O	✓	=						
19	25	✓	✓	=						
20	26	✓	✓	=						
-	27	✓	-	-						
21	28	✓	✓	=						
10	29		✓	=						
11	30		✓	=						
24	31		✓	=						
25	32		✓	=						
23	33		✓	=						
22	34		✓	=						

PTO/SB/30EFS (07-09)
Approved for use through 07/31/2012. OMB 0651-0031
U.S. Patent and Trademark Office; U.S. DEPARTMENT OF COMMERCE
Under the Paperwork Reduction Act of 1995, no persons are required to respond to a collection of information unless it contains a valid OMB control number.

REQUEST FOR CONTINUED EXAMINATION(RCE)TRANSMITTAL
(Submitted Only via EFS-Web)

Application Number	12/649,765	Filing Date	2009-12-30	Docket Number (if applicable)	1013-070	Art Unit	2861
First Named Inventor	Edmond ABERGEL			Examiner Name	AN DO		

This is a Request for Continued Examination (RCE) under 37 CFR 1.114 of the above-identified application.
Request for Continued Examination (RCE) practice under 37 CFR 1.114 does not apply to any utility or plant application filed prior to June 8, 1995, or to any design application. The Instruction Sheet for this form is located at WWW.USPTO.GOV

SUBMISSION REQUIRED UNDER 37 CFR 1.114

Note: If the RCE is proper, any previously filed unentered amendments and amendments enclosed with the RCE will be entered in the order in which they were filed unless applicant instructs otherwise. If applicant does not wish to have any previously filed unentered amendment(s) entered, applicant must request non-entry of such amendment(s).

☐ Previously submitted. If a final Office action is outstanding, any amendments filed after the final Office action may be considered as a submission even if this box is not checked.

- ☐ Consider the arguments in the Appeal Brief or Reply Brief previously filed on _____
- ☐ Other _____

☒ Enclosed

- ☒ Amendment/Reply
- ☐ Information Disclosure Statement (IDS)
- ☐ Affidavit(s)/ Declaration(s)
- ☐ Other _____

MISCELLANEOUS

☐ Suspension of action on the above-identified application is requested under 37 CFR 1.103(c) for a period of months _____
(Period of suspension shall not exceed 3 months; Fee under 37 CFR 1.17(i) required)

☐ Other _____

FEES

☒ **The RCE fee under 37 CFR 1.17(e) is required by 37 CFR 1.114 when the RCE is filed.**
The Director is hereby authorized to charge any underpayment of fees, or credit any overpayments, to
Deposit Account No 071337

SIGNATURE OF APPLICANT, ATTORNEY, OR AGENT REQUIRED

☒ Patent Practitioner Signature

☐ Applicant Signature

PTO/SB/30EFS (07-09)
Approved for use through 07/31/2012. OMB 0651-0031
U.S. Patent and Trademark Office; U.S. DEPARTMENT OF COMMERCE
Under the Paperwork Reduction Act of 1995, no persons are required to respond to a collection of information unless it contains a valid OMB control number.

Signature of Registered U.S. Patent Practitioner			
Signature	/Randy A. Noranbrock/	Date (YYYY-MM-DD)	2013-03-18
Name	Randy A. Noranbrock	Registration Number	42940

This collection of information is required by 37 CFR 1.114. The information is required to obtain or retain a benefit by the public which is to file (and by the USPTO to process) an application. Confidentiality is governed by 35 U.S.C. 122 and 37 CFR 1.11 and 1.14. This collection is estimated to take 12 minutes to complete, including gathering, preparing, and submitting the completed application form to the USPTO. Time will vary depending upon the individual case. Any comments on the amount of time you require to complete this form and/or suggestions for reducing this burden, should be sent to the Chief Information Officer, U.S. Patent and Trademark Office, U.S. Department of Commerce, P.O. Box 1450, Alexandria, VA 22313-1450.

If you need assistance in completing the form, call 1-800-PTO-9199 and select option 2.

Privacy Act Statement

The Privacy Act of 1974 (P.L. 93-579) requires that you be given certain information in connection with your submission of the attached form related to a patent application or patent. Accordingly, pursuant to the requirements of the Act, please be advised that: (1) the general authority for the collection of this information is 35 U.S.C. 2(b)(2); (2) furnishing of the information solicited is voluntary; and (3) the principal purpose for which the information is used by the U.S. Patent and Trademark Office is to process and/or examine your submission related to a patent application or patent. If you do not furnish the requested information, the U.S. Patent and Trademark Office may not be able to process and/or examine your submission, which may result in termination of proceedings or abandonment of the application or expiration of the patent.

The information provided by you in this form will be subject to the following routine uses:

1. The information on this form will be treated confidentially to the extent allowed under the Freedom of Information Act (5 U.S.C. 552) and the Privacy Act (5 U.S.C. 552a). Records from this system of records may be disclosed to the Department of Justice to determine whether the Freedom of Information Act requires disclosure of these records.

2. A record from this system of records may be disclosed, as a routine use, in the course of presenting evidence to a court, magistrate, or administrative tribunal, including disclosures to opposing counsel in the course of settlement negotiations.

3. A record in this system of records may be disclosed, as a routine use, to a Member of Congress submitting a request involving an individual, to whom the record pertains, when the individual has requested assistance from the Member with respect to the subject matter of the record.

4. A record in this system of records may be disclosed, as a routine use, to a contractor of the Agency having need for the information in order to perform a contract. Recipients of information shall be required to comply with the requirements of the Privacy Act of 1974, as amended, pursuant to 5 U.S.C. 552a(m).

5. A record related to an International Application filed under the Patent Cooperation Treaty in this system of records may be disclosed, as a routine use, to the International Bureau of the World Intellectual Property Organization, pursuant to the Patent Cooperation Treaty.

6. A record in this system of records may be disclosed, as a routine use, to another federal agency for purposes of National Security review (35 U.S.C. 181) and for review pursuant to the Atomic Energy Act (42 U.S.C. 218(c)).

7. A record from this system of records may be disclosed, as a routine use, to the Administrator, General Services, or his/her designee, during an inspection of records conducted by GSA as part of that agency's responsibility to recommend improvements in records management practices and programs, under authority of 44 U.S.C. 2904 and 2906. Such disclosure shall be made in accordance with the GSA regulations governing inspection of records for this purpose, and any other relevant (i.e., GSA or Commerce) directive. Such disclosure shall not be used to make determinations about individuals.

8. A record from this system of records may be disclosed, as a routine use, to the public after either publication of the application pursuant to 35 U.S.C. 122(b) or issuance of a patent pursuant to 35 U.S.C. 151. Further, a record may be disclosed, subject to the limitations of 37 CFR 1.14, as a routine use, to the public if the record was filed in an application which became abandoned or in which the proceedings were terminated and which application is referenced by either a published application, an application open to public inspections or an issued patent.

9. A record from this system of records may be disclosed, as a routine use, to a Federal, State, or local law enforcement agency, if the USPTO becomes aware of a violation or potential violation of law or regulation.

Docket No.: 1013-070 **PATENT**

IN THE UNITED STATES PATENT AND TRADEMARK OFFICE

In re Application of	:	
	:	
Edmond ABERGEL	:	Confirmation No. 6124
	:	
U.S. Patent Application No. 12/649,765	:	Group Art Unit: 2861
	:	
Filed: December 30, 2009	:	Examiner: AN DO

For: INK JET PRINTER AND METHOD FOR DEPOSITING A PROTECTIVE LAYER ON A SUBSTRATE

AMENDMENT UNDER 37 C.F.R. §1.114

MS RCE
Commissioner for Patents
P.O. Box 1450
Alexandria, VA 22313-1450

Sir:

In response to the Office Action of September 19, 2012, please amend the above-identified application as follows:

AMENDMENTS TO THE CLAIMS:

This listing of claims will replace all prior versions and listings of claims in the application:

Listing of Claims:

1. (Currently Amended) A method of applying a coating of covering ink to a substrate moving relative to an ink jet nozzle arrangement having a piezoelectric actuator for applying droplets of covering ink to the substrate, the method comprising controlling by a computer the shapes of the droplets by controlling the shape of an electric waveform applied to the piezoelectric actuator, in response to at least one of ~~the following parameters: viscosity of the ink droplets, composition of the covering ink, temperature of the covering ink, temperature of the substrate, desired thickness of the layer, type of substrate surface to which the droplets are applied, and relative speed of the substrate and the ink jet nozzle arrangement~~ the viscosity and/or the temperature of the ink, detected as the ink flows from the ink container to the nozzle by at least one detector upstream from a heater included in the nozzle arrangement.

2-4. (Canceled)

5. (Original) The method of claim 1 wherein the parameter includes temperature of the substrate.

6. (Currently amended) The method of claim 1 wherein the parameter includes thickness of the ~~layer~~ coating.

7. (Currently amended) The method of claim 1 wherein the parameter includes relative speed of the substrate and the ink jet ~~array~~ nozzle arrangement.

8. (Original) The method of claim 1 wherein the parameter includes type of substrate surface to which the droplets are applied.

9. (Previously presented) The method of claim 8 wherein the substrate surface type parameter includes chemical composition of the substrate and/or stiffness of the substrate.

10. (Canceled)

11. (Previously presented) The method of claim 1 wherein the waveform has (a) neutral value associated with the nozzle arrangement being at rest, (b) a first polarity relative to the neutral value for causing the nozzle arrangement to have a volume greater than the neutral value, and (c) a second polarity relative to the neutral value for causing the nozzle arrangement to have a volume less than the neutral value; the waveform first polarity having an intermediate substantially constant amplitude between the neutral value and a peak value, each peak value causing a droplet to be expelled from the nozzle arrangement, the intermediate value having an amplitude and/or duration to dependent on the viscosity of the ink droplet.

12. (Currently Amended) The method of claim 1 further including maintaining the temperature of the covering ink at a predetermined temperature within the ink jet nozzle arrangement <u>by said heater</u>.

13. (Previously presented) The method of claim 1 wherein the ink includes a photoinitiator and further including irradiating the covering ink applied to the substrate with radiation that activates the photoinitiator.

14. (Currently Amended) Apparatus for applying a coating of covering ink to a substrate<u>,</u> comprising a transport mechanism for causing relative movement between the

substrate and an ink jet nozzle arrangement, the ink jet nozzle arrangement having a piezoelectric actuator for applying droplets of covering ink to the substrate; a computer controlling a heater included in the nozzle arrangement heating the covering ink and an electric source for applying an electric waveform to the piezoelectric actuator, said waveform controlling the shapes of the droplets, said electric waveform having a shape determined by at least one of ~~the following parameters: viscosity of the covering ink, composition of the covering ink, temperature of the covering ink, temperature of the substrate, desired thickness of the layer, type of substrate surface to which the droplets are applied, and relative speed of the substrate and the ink jet nozzle arrangement~~ the viscosity and/or the temperature of the covering ink, the apparatus further including at least one detector upstream from the heater for detecting the viscosity of the ink and/or a detector for detecting temperature of the ink droplets as the ink flows from the ink container to the nozzle.

15-17. (Canceled)

18. (Previously presented) The apparatus of claim 14 wherein the parameter includes temperature of the substrate, and further including a detector for detecting temperature of the substrate.

19. (Currently amended) The apparatus of claim 14 wherein the parameter includes desired thickness of the ~~layer~~ coating.

20. (Currently amended) The apparatus of claim 14 wherein the parameter includes relative speed of the substrate and the ink jet ~~array~~ nozzle arrangement.

21. (Original) The apparatus of claim 14 wherein the parameter includes type of substrate surface to which the droplets are applied.

22. (Previously presented) The apparatus of claim 21 wherein the substrate surface type parameter includes chemical composition of the substrate and/or stiffness of the substrate.

23. (Canceled)

24. (Original) The apparatus of claim 14 wherein the waveform has (a) neutral value associated with the nozzle arrangement being at rest, (b) a first polarity relative to the neutral value for causing the nozzle arrangement to have a volume greater than the neutral value, and (c) a second polarity relative to the neutral value for causing the nozzle arrangement to have a volume less than the neutral value; the waveform first polarity having an intermediate substantially constant amplitude between the neutral value and a peak value, each peak value causing a droplet to be expelled from the nozzle arrangement, the intermediate value having an amplitude and/or duration dependent on the viscosity of the ink droplet.

25. (Currently amended) The apparatus of claim 14 further including a temperature detector for the ink flowing to the ink jet nozzle arrangement, and a temperature controller responsive to the temperature detector, the temperature controller being arranged for controlling the temperature of the ink flowing in the ink jet nozzle arrangement, wherein the computer controls the heater via the temperature controller.

26. (Currently amended) The apparatus of claim 14 further including a memory storing information associated with the shapes of a plurality of the waveforms, an interface for controlling readout of said information in the memory in response to at least one of the parameters being entered into the interface, and a controller ~~to arranged~~ arranged to be responsive to the information readout of said memory for controlling the electric source for causing the electric source to derive a waveform having a shape determined by the readout information.

27. (Canceled)

28. (Previously presented) The apparatus of claim 26 wherein the interface includes a detector machine interface for enabling a detector arrangement for at least one of the following parameters to enter at least one of the following parameters into the interface; viscosity of the covering ink, temperature of the covering ink, temperature of the substrate, and relative speed of the substrate and the ink jet nozzle arrangement.

29. (Previously presented) The method of claim 1 wherein the parameter includes the viscosity of the droplet of covering ink at the outlet of the nozzle.

30. (Previously presented) The method of claim 1 wherein the parameter includes viscosity of the covering ink measured by a probe upstream from the piezoelectric actuator and/or from a heater heating the covering ink.

31. (Previously presented) The apparatus of claim 14 wherein the parameter includes the viscosity of the droplet of covering ink at the outlet of the nozzle.

32. (Currently amended) The apparatus of claim 14 wherein the parameter includes viscosity of the covering ink measured by a probe upstream from the piezoelectric actuator ~~and/or from a heater heating the covering ink~~.

33. (Previously presented) The apparatus of claim 26, wherein the interface includes an operator memory interface for enabling an operator to enter at least one of the parameters into the interface.

34. (Previously presented) The apparatus of claim 28, wherein the interface includes an operator memory interface for enabling an operator to enter at least one of the parameters into the interface.

REMARKS

Reconsideration and further examination are requested.

Disposition of the claims

Claims 1, 5-9, 11-15, 18-22, 24-26, & 28-34 are pending.

Claims 1, 6-7, 12, 14, 19-20, 25, & 32 are currently amended.

Claims 2-4, 10, 15-17, 23, & 27 are canceled without prejudice or disclaimer. As to each canceled claim, the rejection should be withdrawn.

No new matter is believed to have been added by this amendment.

Claim 1 is currently amended as follows:

"1. *A method of applying a coating of covering ink to a substrate moving relative to an ink jet nozzle arrangement having a piezoelectric actuator for applying droplets of covering ink to the substrate, the method comprising controlling the shapes of the droplets by controlling* ***by a computer*** *the shape of an electric waveform applied to the piezoelectric actuator, in response to at least* ~~***one of the following parameters: viscosity of the ink droplets, composition of the covering ink, temperature of the covering ink, temperature of the substrate, desired thickness of the layer, type of substrate surface to which the droplets are applied, and relative speed of the substrate and the ink jet nozzle arrangement***~~*,* ***the viscosity and/or the temperature of the ink, detected as the ink flows from the ink container to the nozzle by at least one detector upstream from a heater included in the nozzle arrangement***."

Similarly, claim 14 is currently amended as follows:

"14. *Apparatus for applying a coating of covering ink to a substrate comprising a transport mechanism for causing relative movement between the substrate and an ink jet nozzle arrangement, the ink jet nozzle arrangement having a piezoelectric actuator for applying droplets of covering ink to the substrate;* ***a computer controlling a heater included in the nozzle arrangement heating the covering ink and*** *an electric source for applying an electric waveform to the piezoelectric actuator, said waveform controlling the shapes of the droplets, said electric waveform having a shape determined by* ***the***

> ***viscosity of the covering ink and/or the temperature of the covering ink,*** ~~***and at least one of the following parameters: viscosity of the covering ink, composition of the covering ink, temperature of the covering ink, temperature of the substrate, desired thickness of the layer, type of substrate surface to which the droplets are applied, and relative speed of the substrate and the ink jet nozzle arrangement,***~~ ***the apparatus further including at least one detector upstream from the heater for detecting the viscosity of the ink and/or a detector for detecting temperature of the ink droplets as the ink flows from the ink container to the nozzle***."

The amendments to claims 1 & 14 are supported by the description and the drawings. For example, concerning ***a computer controlling a heater heating the covering ink***, the support is supported by figures 1; concerning ***said heater being included in the nozzle***, the support is paragraph [0039]; and concerning ***the apparatus further including a detector for detecting the viscosity of the ink and/or a detector for detecting temperature of the ink droplets as the ink flows from the ink container to the nozzle and upstream from the heater***, the support is claims 15, 17, and 32.

Furthermore, to be consistent with the description and for clarity, claims 6, 7, 12, 19-20, 25, 26, & 32 are currently amended.

Claims 2, 4, 15, & 17 are currently canceled without prejudice or disclaimer.

Claim Rejections – 35 U.S.C. §102

Claims 1, 2, 4, 11, 12, 14, 15, 17, 24-26, 28, 29, & 31 were rejected under 35 U.S.C. §102(b) as being anticipated by Asano. Office action, ¶2. A reference cannot anticipate what it fails to describe. Such is the case here, especially for the following reasons.

Claims 1 & 14

Asano teaches an inkjet recording apparatus having a head that ejects ink droplets, a temperature detector that detects temperatures in the vicinity of the head, and a drive waveform controller that generates a drive waveform driving the head, wherein the drive waveform controller change the amplitude as temperature changes, based on temperature information coming from the temperature detector according to the expression V=EXP(A/T +B) wherein V

represents an amplitude of the drive waveform, T represents the temperature and A and B represent a constant (col.9, ll. 18-29).

Asano does not disclose a method controlling the shape of an electric waveform applied to the pieozoelectric actuator in response to the viscosity of the covering ink being detected as the ink flows from the ink container to the nozzle and upstream from the heater.

Asano's apparatus does not measure the ink viscosity. It just approximates the change of viscosity. In col.9, ll. 4-11, Asano's apparatus measures the temperature by the temperature detectors positioned "in the vicinity of the heads". Knowing from Andrade's expression that viscosity is proportional to exp(1/T), the changes in viscosity can be approximated. But Asano's apparatus does not measure viscosity even if it were to approximate a <u>change of viscosity</u>.

Even if it is assumed that the viscosity is measured from the temperature detectors, the measurement is not made as the ink flows from the ink container to the nozzle and upstream from the heater. The temperature detectors of Asano are positioned "in the vicinity of" the head which, as explained in Asano col.4, ll. 16-27, means that the temperature detectors are provided to be in contact with surfaces of members forming ink channels of the head or of members which are in contact with the aforesaid members forming ink channels of the head. The temperature detectors are then in contact of the head. This is not the case in the present application wherein the temperature detector is positioned between the ink container and the nozzle in the flow path of the ink.

Besides Asano's apparatus measures the ink temperature. But, for the same reasons as above, the ink temperature is measured "in the vicinity" of the head and not between the ink container and the nozzle in the flow path of the ink.

In fact, Asano's apparatus does not allow the control of the ink temperature as Asano does not recite any heater included in the nozzle. Then, the viscosity detector and/or the temperature detector cannot be upstream from a heater.

Thus, for at least the reasons cited above, Claims 1 and 14 are new and inventive compared to Asano.

Claim 12

Contrary to what the Examiner asserted, Asano does not teach the subject matter of claim 12. Indeed, claim 12 recites a process of maintaining the temperature of the covering ink at a predetermined temperature within the inkjet nozzle arrangement. For Asano, no ink temperature maintenance is taught. Instead, Asano teaches the control of the head temperature. Asano gives the drive voltage as a function of the head temperature so as to make droplet speed constant. Thus, no maintenance of temperature is taught by Asano as the head temperature determines the drive voltage of the piezoelectric elements. Thus, Asano does not teach the subject matter of claim 12.

Claim 25

Contrary to what the Examiner asserted, Asano does not teach the subject matter of claim 25. Asano does not teach a temperature controller arranged for controlling the temperature of the ink flowing in the ink jet nozzle. The Examiner identifies the temperature controllers of the present application as the head drive control circuit of Asano. Contrary to what the Examiner asserted, the head drive control circuit does not control the temperature of the ink flowing in the ink jet nozzle arrangement. The head drive control circuits of Asano (col.4, ll. 28-36) includes a driver for driving a piezo-head, present in each channel, and that drives the piezo-head based on a drive waveform coming from drive waveform generation circuit. Transfer section transfers from image memory to each of head drive control circuits, a partial image information to be recorded by a single ink ejection from plural nozzles of each head as explained in col. 4, ll. 52-55. This shows that the head drive control circuit does not control the temperature of the ink and cannot be identified as the temperature controller of the present application. Thus, Asano does not teach the subject matter of claim 25.

Claim 29 & 31

Claims 29 and 31 depend from claim 1 or 14. For the same reasons as above, Asano does not teach the measurement of viscosity but the change of viscosity determined from the head temperature. Thus, Asano does not teach claims 29 and 31.

Claim Rejections – 35 U.S.C. §103

There are two rejections, which are addressed under separate headers.

Obviousness is determined in view of the *Graham* factors, which are in dispute here. Thus, the rejections should be withdrawn, especially for the following reasons.

Claims 5-9, 13, 18-22, & 33-34

Claims 5-9, 13, 18-22, & 33-34 were rejected as obvious over Asano *et al.* in view of Konno. Office action, ¶4. The deficiencies of Asano were noted above. These deficiencies were not remedied by the application of Konno. Thus, the rejection should be withdrawn.

Furthermore, according to the Examiner, concerning claims 6 and 19, Konno teaches that the parameters allowing the control of the shape of the waveform applied to the piezoelectric actuator include thickness of the coating. Yet, Konno fails to teach that Konno's parameters include the thickness of the coating. Thus, the rejection should be withdrawn for this reason too.

Moreover, according the Examiner, concerning claims 13, the ink includes a photoinitiator and the method further includes irradiating the covering ink applied to the substrate with radiation that activates the photoinitiator. Applicant disagrees with this finding. Indeed, according to Konno, Konno's apparatus forms an image with two types of liquid. As explained in Konno col.6, ll. 16-26, the first liquid includes a transparent liquid containing a cationic polymer; and the second liquid includes a colored ink containing an anionic polymer. In other words, if a transparent liquid containing a cationic polymer, namely, a polymer containing positively charged surface-active ions, were applied to the recording medium as the first liquid, and if a colored ink containing an anionic polymer, namely, a polymer containing negatively charged surface-active ions, were applied as the second liquid, then the insolubility of the ink and the fixing properties of the ink would be ensured by reaction between the first liquid and the second liquid. Thus, no photoinitiator is contained in the ink of Konno, and the rejection should be withdrawn for this reason, too.

Claims 30 & 32

Claims 30 and 32 were rejected as obvious over Asano *et al.* in view of Doi *et al.* Office action, ¶5. The deficiencies of Asano were noted above. These deficiencies were not remedied by the application of Doi. Thus, the rejection should be withdrawn.

Doi teaches the measurement of ζ-potential. According to Doi, ζ-potential is calculated from equation (1) of col.13. In this equation, Doi teaches that just ESA which is a factor

representing a pressure per unit electric field, is determined by measurement. Doi does not disclose that the correction term, the dielectric constant, the sonic velocity, the density difference, the volume fraction, and the viscosity are measured. Actually, no mention of any viscosity measurement is disclosed in Doi. According to what disclosed in Doi, we understand that just ESA is measured. Thus, the rejection should be withdrawn.

Conclusion

It is respectfully submitted that the present application should be in condition for allowance and a Notice to that effect is earnestly solicited.

To the extent necessary, a petition for an extension of time under 37 C.F.R. 1.136 is hereby made. Please charge any shortage in fees due in connection with the filing of this paper, including extension of time fees, to Deposit Account 07-1337 and please credit any excess fees to such deposit account.

Respectfully submitted,

LOWE HAUPTMAN HAM & BERNER, LLP
/Randy A. Noranbrock/
Randy A. Noranbrock
Registration No. 42,940

2318 Mill Road, Suite 1400
Alexandria, Virginia 22314
(703) 684-1111 (703) 518-5499 Facsimile
Date: March 18, 2013
RAN/SAP:eca

Electronic Patent Application Fee Transmittal

Application Number:	12649765
Filing Date:	30-Dec-2009
Title of Invention:	INK JET PRINTER AND METHOD FOR DEPOSITING A PROTECTIVE LAYER ON A SUBSTRATE
First Named Inventor/Applicant Name:	Edmond ABERGEL
Filer:	Randy A. Noranbrock/Elizabeth Anastasio
Attorney Docket Number:	1013-070

Filed as Small Entity

Utility under 35 USC 111(a) Filing Fees

Description	Fee Code	Quantity	Amount	Sub-Total in USD($)
Basic Filing:				
Pages:				
Claims:				
Miscellaneous-Filing:				
Petition:				
Patent-Appeals-and-Interference:				
Post-Allowance-and-Post-Issuance:				
Extension-of-Time:				
Extension - 3 months with $0 paid	2253	1	645	645

Description	Fee Code	Quantity	Amount	Sub-Total in USD($)
Miscellaneous:				
Request for Continued Examination	2801	1	465	465
		Total in USD ($)		**1110**

Electronic Acknowledgement Receipt

EFS ID:	15287230
Application Number:	12649765
International Application Number:	
Confirmation Number:	6124
Title of Invention:	INK JET PRINTER AND METHOD FOR DEPOSITING A PROTECTIVE LAYER ON A SUBSTRATE
First Named Inventor/Applicant Name:	Edmond ABERGEL
Customer Number:	22429
Filer:	Randy A. Noranbrock/Elizabeth Anastasio
Filer Authorized By:	Randy A. Noranbrock
Attorney Docket Number:	1013-070
Receipt Date:	18-MAR-2013
Filing Date:	30-DEC-2009
Time Stamp:	16:38:42
Application Type:	Utility under 35 USC 111(a)

Payment information:

Submitted with Payment	yes
Payment Type	Credit Card
Payment was successfully received in RAM	$1110
RAM confirmation Number	5254
Deposit Account	
Authorized User	

File Listing:

Document Number	Document Description	File Name	File Size(Bytes)/ Message Digest	Multi Part /.zip	Pages (if appl.)

1	Request for Continued Examination (RCE)	RCE_sb0030e.pdf	697775 cbab7e51af811203f26a9cfa85c29195f5a1c09a	no	3
Warnings:					
Information:					
2	Amendment After Final	20120919AmendmenttofOA.pdf	78739 a3d4d46c28f520ce60b54aa88b733890d2a53737	no	13
Warnings:					
Information:					
3	Fee Worksheet (SB06)	fee-info.pdf	32599 4e6b817fcd90e2050fb3f23306c03d8959538da8	no	2
Warnings:					
Information:					
			Total Files Size (in bytes):	809113	

This Acknowledgement Receipt evidences receipt on the noted date by the USPTO of the indicated documents, characterized by the applicant, and including page counts, where applicable. It serves as evidence of receipt similar to a Post Card, as described in MPEP 503.

<u>New Applications Under 35 U.S.C. 111</u>
If a new application is being filed and the application includes the necessary components for a filing date (see 37 CFR 1.53(b)-(d) and MPEP 506), a Filing Receipt (37 CFR 1.54) will be issued in due course and the date shown on this Acknowledgement Receipt will establish the filing date of the application.

<u>National Stage of an International Application under 35 U.S.C. 371</u>
If a timely submission to enter the national stage of an international application is compliant with the conditions of 35 U.S.C. 371 and other applicable requirements a Form PCT/DO/EO/903 indicating acceptance of the application as a national stage submission under 35 U.S.C. 371 will be issued in addition to the Filing Receipt, in due course.

<u>New International Application Filed with the USPTO as a Receiving Office</u>
If a new international application is being filed and the international application includes the necessary components for an international filing date (see PCT Article 11 and MPEP 1810), a Notification of the International Application Number and of the International Filing Date (Form PCT/RO/105) will be issued in due course, subject to prescriptions concerning national security, and the date shown on this Acknowledgement Receipt will establish the international filing date of the application.

PTO/SB/06 (07-06)
Approved for use through 1/31/2007. OMB 0651-0032
U.S. Patent and Trademark Office; U.S. DEPARTMENT OF COMMERCE
Under the Paperwork Reduction Act of 1995, no persons are required to respond to a collection of information unless it displays a valid OMB control number.

PATENT APPLICATION FEE DETERMINATION RECORD Substitute for Form PTO-875	Application or Docket Number 12/649,765	Filing Date 12/30/2009	☐ To be Mailed

APPLICATION AS FILED – PART I

FOR	(Column 1) NUMBER FILED	(Column 2) NUMBER EXTRA	SMALL ENTITY ☒ RATE ($)	FEE ($)	OR	OTHER THAN SMALL ENTITY RATE ($)	FEE ($)
☐ BASIC FEE (37 CFR 1.16(a), (b), or (c))	N/A	N/A	N/A			N/A	
☐ SEARCH FEE (37 CFR 1.16(k), (i), or (m))	N/A	N/A	N/A			N/A	
☐ EXAMINATION FEE (37 CFR 1.16(o), (p), or (q))	N/A	N/A	N/A			N/A	
TOTAL CLAIMS (37 CFR 1.16(i))	minus 20 =	*	X $ =		OR	X $ =	
INDEPENDENT CLAIMS (37 CFR 1.16(h))	minus 3 =	*	X $ =			X $ =	
☐ APPLICATION SIZE FEE (37 CFR 1.16(s))	If the specification and drawings exceed 100 sheets of paper, the application size fee due is $250 ($125 for small entity) for each additional 50 sheets or fraction thereof. See 35 U.S.C. 41(a)(1)(G) and 37 CFR 1.16(s).						
☐ MULTIPLE DEPENDENT CLAIM PRESENT (37 CFR 1.16(j))							
* If the difference in column 1 is less than zero, enter "0" in column 2.			TOTAL			TOTAL	

APPLICATION AS AMENDED – PART II

AMENDMENT 03/18/2013

	(Column 1) CLAIMS REMAINING AFTER AMENDMENT		(Column 2) HIGHEST NUMBER PREVIOUSLY PAID FOR	(Column 3) PRESENT EXTRA	SMALL ENTITY RATE ($)	ADDITIONAL FEE ($)	OR	OTHER THAN SMALL ENTITY RATE ($)	ADDITIONAL FEE ($)
Total (37 CFR 1.16(i))	* 25	Minus	** 29	= 0	X $31 =	0	OR	X $ =	
Independent (37 CFR 1.16(h))	* 2	Minus	***3	= 0	X $125 =	0	OR	X $ =	
☐ Application Size Fee (37 CFR 1.16(s))									
☐ FIRST PRESENTATION OF MULTIPLE DEPENDENT CLAIM (37 CFR 1.16(j))							OR		
					TOTAL ADD'L FEE	0	OR	TOTAL ADD'L FEE	

AMENDMENT

	(Column 1) CLAIMS REMAINING AFTER AMENDMENT		(Column 2) HIGHEST NUMBER PREVIOUSLY PAID FOR	(Column 3) PRESENT EXTRA	RATE ($)	ADDITIONAL FEE ($)	OR	RATE ($)	ADDITIONAL FEE ($)
Total (37 CFR 1.16(i))	*	Minus	**	=	X $ =		OR	X $ =	
Independent (37 CFR 1.16(h))	*	Minus	***	=	X $ =		OR	X $ =	
☐ Application Size Fee (37 CFR 1.16(s))									
☐ FIRST PRESENTATION OF MULTIPLE DEPENDENT CLAIM (37 CFR 1.16(j))							OR		
					TOTAL ADD'L FEE		OR	TOTAL ADD'L FEE	

* If the entry in column 1 is less than the entry in column 2, write "0" in column 3.
** If the "Highest Number Previously Paid For" IN THIS SPACE is less than 20, enter "20".
*** If the "Highest Number Previously Paid For" IN THIS SPACE is less than 3, enter "3".
The "Highest Number Previously Paid For" (Total or Independent) is the highest number found in the appropriate box in column 1.

Legal Instrument Examiner:
/AMANDA FORD/

This collection of information is required by 37 CFR 1.16. The information is required to obtain or retain a benefit by the public which is to file (and by the USPTO to process) an application. Confidentiality is governed by 35 U.S.C. 122 and 37 CFR 1.14. This collection is estimated to take 12 minutes to complete, including gathering, preparing, and submitting the completed application form to the USPTO. Time will vary depending upon the individual case. Any comments on the amount of time you require to complete this form and/or suggestions for reducing this burden, should be sent to the Chief Information Officer, U.S. Patent and Trademark Office, U.S. Department of Commerce, P.O. Box 1450, Alexandria, VA 22313-1450. DO NOT SEND FEES OR COMPLETED FORMS TO THIS ADDRESS. **SEND TO: Commissioner for Patents, P.O. Box 1450, Alexandria, VA 22313-1450.**
If you need assistance in completing the form, call 1-800-PTO-9199 and select option 2.

UNITED STATES PATENT AND TRADEMARK OFFICE

UNITED STATES DEPARTMENT OF COMMERCE
United States Patent and Trademark Office
Address: COMMISSIONER FOR PATENTS
P.O. Box 1450
Alexandria, Virginia 22313-1450
www.uspto.gov

APPLICATION NO.	FILING DATE	FIRST NAMED INVENTOR	ATTORNEY DOCKET NO.	CONFIRMATION NO.
12/649,765	12/30/2009	Edmond ABERGEL	1013-070	6124

22429 7590 09/19/2012
LOWE HAUPTMAN HAM & BERNER, LLP
1700 DIAGONAL ROAD
SUITE 300
ALEXANDRIA, VA 22314

EXAMINER
DO, AN H

ART UNIT	PAPER NUMBER
2853	

MAIL DATE	DELIVERY MODE
09/19/2012	PAPER

Please find below and/or attached an Office communication concerning this application or proceeding.

The time period for reply, if any, is set in the attached communication.

PTOL-90A (Rev. 04/07)

Office Action Summary	Application No.	Applicant(s)	
	12/649,765	ABERGEL, EDMOND	
	Examiner	Art Unit	
	AN DO	2853	

-- The MAILING DATE of this communication appears on the cover sheet with the correspondence address --

Period for Reply

A SHORTENED STATUTORY PERIOD FOR REPLY IS SET TO EXPIRE 3 MONTH(S) OR THIRTY (30) DAYS, WHICHEVER IS LONGER, FROM THE MAILING DATE OF THIS COMMUNICATION.

- Extensions of time may be available under the provisions of 37 CFR 1.136(a). In no event, however, may a reply be timely filed after SIX (6) MONTHS from the mailing date of this communication.
- If NO period for reply is specified above, the maximum statutory period will apply and will expire SIX (6) MONTHS from the mailing date of this communication.
- Failure to reply within the set or extended period for reply will, by statute, cause the application to become ABANDONED (35 U.S.C. § 133). Any reply received by the Office later than three months after the mailing date of this communication, even if timely filed, may reduce any earned patent term adjustment. See 37 CFR 1.704(b).

Status

1)☒ Responsive to communication(s) filed on *05 July 2012*.

2a)☒ This action is **FINAL**. 2b)☐ This action is non-final.

3)☐ An election was made by the applicant in response to a restriction requirement set forth during the interview on _____; the restriction requirement and election have been incorporated into this action.

4)☐ Since this application is in condition for allowance except for formal matters, prosecution as to the merits is closed in accordance with the practice under *Ex parte Quayle*, 1935 C.D. 11, 453 O.G. 213.

Disposition of Claims

5)☒ Claim(s) *1,2,4-9,11-15,17-22,24-26 and 28-34* is/are pending in the application.

5a) Of the above claim(s) _____ is/are withdrawn from consideration.

6)☐ Claim(s) _____ is/are allowed.

7)☒ Claim(s) *1,2,4-9,11-15,17-22,24-26 and 28-34* is/are rejected.

8)☐ Claim(s) _____ is/are objected to.

9)☐ Claim(s) _____ are subject to restriction and/or election requirement.

Application Papers

10)☐ The specification is objected to by the Examiner.

11)☐ The drawing(s) filed on _____ is/are: a)☐ accepted or b)☐ objected to by the Examiner.

Applicant may not request that any objection to the drawing(s) be held in abeyance. See 37 CFR 1.85(a).

Replacement drawing sheet(s) including the correction is required if the drawing(s) is objected to. See 37 CFR 1.121(d).

12)☐ The oath or declaration is objected to by the Examiner. Note the attached Office Action or form PTO-152.

Priority under 35 U.S.C. § 119

13)☐ Acknowledgment is made of a claim for foreign priority under 35 U.S.C. § 119(a)-(d) or (f).

a)☐ All b)☐ Some * c)☐ None of:

1.☐ Certified copies of the priority documents have been received.

2.☐ Certified copies of the priority documents have been received in Application No. _____.

3.☐ Copies of the certified copies of the priority documents have been received in this National Stage application from the International Bureau (PCT Rule 17.2(a)).

* See the attached detailed Office action for a list of the certified copies not received.

Attachment(s)

1) ☒ Notice of References Cited (PTO-892)
2) ☐ Notice of Draftsperson's Patent Drawing Review (PTO-948)
3) ☐ Information Disclosure Statement(s) (PTO/SB/08) Paper No(s)/Mail Date _____.
4) ☐ Interview Summary (PTO-413) Paper No(s)/Mail Date. _____ .
5) ☐ Notice of Informal Patent Application
6) ☐ Other: _____.

DETAILED ACTION

The Amendment filed on 05 July 2012 has been acknowledged.

Claim Rejections - 35 USC § 102

1. The following is a quotation of the appropriate paragraphs of 35 U.S.C. 102 that form the basis for the rejections under this section made in this Office action:

> A person shall be entitled to a patent unless –
>
> (b) the invention was patented or described in a printed publication in this or a foreign country or in public use or on sale in this country, more than one year prior to the date of application for patent in the United States.

2. Claims 1, 2, 4, 11, 12 and 14, 15, 17, 24-26, 28, 29 and 31 are rejected under 35 U.S.C. 102(b) as being anticipated by Asano et al (US 7,226,141).

Asano et al disclose the following claimed features:

Regarding claims 1 and 14, a method and apparatus of applying a coating of covering ink (Figures 1-7c) to a substrate (1) moving relative to an ink jet nozzle arrangement (Figure 3c, elements 1K, 1C, 1M, 1Y) having a piezoelectric actuator (Figures 7a-7c) for applying droplets of covering ink to the substrate (1), the method comprising controlling the shapes of the droplets by controlling the shape of an electric waveform (Figure 5) applied to the piezoelectric actuator, in response to at least one of the following parameters: viscosity of the ink droplets, composition of the covering ink, temperature of the covering ink droplets, temperature of the substrate, desired thickness of the layer, type of substrate surface to which the droplets are applied, and relative speed of the substrate and the ink jet nozzle arrangement (column 8, line 60 to column 9, line 29).

Regarding claims 2 and 15, wherein the parameter includes viscosity of the covering ink determined by detecting the viscosity of the ink as the ink flows to the nozzle (Figure 4, temperature sensors 24a-24d).

Regarding claims 4 and 17, wherein the parameter includes temperature of the covering ink (Figure 4, temperature sensors 24a-24d).

Regarding claims 11 and 24, the waveform (Figure 5) has a first polarity relative to the neutral value (neutral horizontal line) for causing the nozzle arrangement to have a volume greater (first rectangular waveform) than the neutral value; the first polarity having an intermediate substantially constant amplitude between the neutral value and a peak value, each peak value causing a droplet to be expelled from the nozzle arrangement (Figure 9), the intermediate value having an amplitude and/or duration dependent on the viscosity of the ink droplet.

Regarding claim 12, further including maintaining the temperature of the covering ink at a predetermined temperature within the ink jet nozzle arrangement (column 8, line 60 to column 9, line 29).

Regarding claim 25, further including a temperature detector (24a-24d) for the ink flowing to the ink jet nozzle arrangement, and a temperature controller (23a-23d) responsive to the temperature detector (24-24d), the temperature controller (23a-23d) being arranged for controlling the temperature of the ink flowing in the ink jet nozzle arrangement (Figure 4).

Regarding claim 26, further including a memory (65) storing information associated with the shapes of a plurality of the waveforms, an interface (61) for

controlling readout of said information in the memory in response to at least one of the parameters being entered into the interface, and a controller (63) to arranged to be responsive to the information readout of said memory for controlling the electric source for causing the electric source to derive a waveform having a shape determined by the readout information (Figure 4).

Regarding claim 28, wherein the interface (61) includes a detector machine interface for enabling a detector arrangement for at least one of the following parameters to enter at least one of the following parameters into the interface; viscosity of the covering ink, temperature of the covering ink, temperature of the substrate, and relative speed of the substrate and the ink jet nozzle arrangement (column 8, line 60 to column 9, line 29).

Regarding claims 29 and 31, wherein the parameter includes the viscosity of the droplet of covering ink at the outlet of the nozzle (column 8, lines 52-59).

Claim Rejections - 35 USC § 103

3. The following is a quotation of 35 U.S.C. 103(a) which forms the basis for all obviousness rejections set forth in this Office action:

> (a) A patent may not be obtained though the invention is not identically disclosed or described as set forth in section 102 of this title, if the differences between the subject matter sought to be patented and the prior art are such that the subject matter as a whole would have been obvious at the time the invention was made to a person having ordinary skill in the art to which said subject matter pertains. Patentability shall not be negatived by the manner in which the invention was made.

4. Claims 5-9, 13, 18-22, 33 and 34 are rejected under 35 U.S.C. 103(a) as being unpatentable over Asano et al (US 7,226,141) in view of Konno (US 7,543,899).

Asano et al disclose the claimed invention except for reciting the following:

Regarding claims 5 and 18, wherein the parameter includes temperature of the substrate.

Regarding claims 6 and 19, wherein the parameter includes thickness of the layer.

Regarding claims 7 and 20, wherein the parameter includes relative speed of the substrate and the ink jet array.

Regarding claims 8 and 21, wherein the parameter includes type of substrate surface to which the droplets are applied.

Regarding claims 9 and 22, wherein the substrate surface type parameter includes chemical composition of the substrate and/or stiffness of the substrate.

Regarding claim 13, wherein the ink includes a photoinitiator and further including irradiating the covering ink applied to the substrate with radiation that activates the photoinitiator.

Regarding claims 33 and 34, wherein the interface includes an operator memory interface for enabling an operator to enter at least one of the parameters into the interface.

Konno teaches the following features:

Regarding claims 5 and 18, wherein the parameter includes temperature of the substrate (Claim 10).

Regarding claims 6 and 19, wherein the parameter includes thickness of the layer (Claim 7).

Regarding claims 7 and 20, wherein the parameter includes relative speed of the substrate and the ink jet array (Claim 10).

Regarding claims 8 and 21, wherein the parameter includes type of substrate surface to which the droplets are applied (Claim 10).

Regarding claims 9 and 22, wherein the substrate surface type parameter includes chemical composition of the substrate and/or stiffness of the substrate (Claim 5).

Regarding claim 13, wherein the ink includes a photoinitiator and further including irradiating the covering ink applied to the substrate with radiation that activates the photoinitiator (Claim 9).

Regarding claims 33 and 34, wherein the interface (70) includes an operator memory interface for enabling an operator to enter at least one of the parameters into the interface.

It would have been obvious to one of ordinary skill in the art at the time the invention was made to include the substrate surface type parameters as taught by Konno into Asano et al, for the purpose of obtaining the satisfactory images being formed on the substrate.

5. Claims 30 and 32 are rejected under 35 U.S.C. 103(a) as being unpatentable over Asano et al (US 7,226,141) in view of Doi et al (US 7,018,459).

Asano et al disclose the claimed invention except for reciting the parameter includes viscosity of the covering ink measured by a probe upstream from the piezoelectric actuator and/or from a heater heating the covering ink.

Doi et al teach the parameter includes viscosity of the covering ink measured by a probe (column 13, lines 48-57).

It would have been obvious to one of ordinary skill in the art at the time the invention was made to include the viscosity of the covering ink measured by a probe as taught by Doi et al into Asano et al, for the purpose of obtaining the thickness of the ink viscosity.

Response to Arguments

6. The indicated allowability of claims 11 and 24 is withdrawn in view of the newly discovered reference(s) to Asano et al (US 7,226,141). Rejections based on the newly cited reference(s) as shown above.

7. Applicant's arguments with respect to claims 1-10, 12-23 and 25-28 have been considered but are moot because the arguments do not apply to any of the references being used in the current rejection.

8. Applicant's amendment necessitated the new ground(s) of rejection presented in this Office action. Accordingly, **THIS ACTION IS MADE FINAL**. See MPEP § 706.07(a). Applicant is reminded of the extension of time policy as set forth in 37 CFR 1.136(a).

A shortened statutory period for reply to this final action is set to expire THREE MONTHS from the mailing date of this action. In the event a first reply is filed within TWO MONTHS of the mailing date of this final action and the advisory action is not mailed until after the end of the THREE-MONTH shortened statutory period, then the shortened statutory period will expire on the date the advisory action is mailed, and any

extension fee pursuant to 37 CFR 1.136(a) will be calculated from the mailing date of the advisory action. In no event, however, will the statutory period for reply expire later than SIX MONTHS from the date of this final action.

Contact Information

9. Any inquiry concerning this communication or earlier communications from the examiner should be directed to AN DO whose telephone number is (571)272-2143. The examiner can normally be reached on Monday-Friday (Flexible).

If attempts to reach the examiner by telephone are unsuccessful, the examiner's supervisor, Stephen D. Meier can be reached on 571-272-2149. The fax phone number for the organization where this application or proceeding is assigned is 571-273-8300.

Information regarding the status of an application may be obtained from the Patent Application Information Retrieval (PAIR) system. Status information for published applications may be obtained from either Private PAIR or Public PAIR. Status information for unpublished applications is available through Private PAIR only. For more information about the PAIR system, see http://pair-direct.uspto.gov. Should you have questions on access to the Private PAIR system, contact the Electronic Business Center (EBC) at 866-217-9197 (toll-free). If you would like assistance from a USPTO Customer Service Representative or access to the automated information system, call 800-786-9199 (IN USA OR CANADA) or 571-272-1000.

/An H. Do/
Primary Examiner, Art Unit 2853

Notice of References Cited	Application/Control No. 12/649,765	Applicant(s)/Patent Under Reexamination ABERGEL, EDMOND	
	Examiner AN DO	Art Unit 2853	Page 1 of 1

U.S. PATENT DOCUMENTS

*		Document Number Country Code-Number-Kind Code	Date MM-YYYY	Name	Classification
*	A	US-7,018,459	03-2006	Doi et al.	106/31.6
	B	US-			
	C	US-			
	D	US-			
	E	US-			
	F	US-			
	G	US-			
	H	US-			
	I	US-			
	J	US-			
	K	US-			
	L	US-			
	M	US-			

FOREIGN PATENT DOCUMENTS

*		Document Number Country Code-Number-Kind Code	Date MM-YYYY	Country	Name	Classification
	N					
	O					
	P					
	Q					
	R					
	S					
	T					

NON-PATENT DOCUMENTS

*		Include as applicable: Author, Title Date, Publisher, Edition or Volume, Pertinent Pages)
	U	
	V	
	W	
	X	

*A copy of this reference is not being furnished with this Office action. (See MPEP § 707.05(a).)
Dates in MM-YYYY format are publication dates. Classifications may be US or foreign.

/A.D./ 9/7/2012

EAST Search History

EAST Search History (Prior Art)

Ref #	Hits	Search Query	DBs	Default Operator	Plurals	Time Stamp
L1	6	(viscosity with ink with measur$3 with probe)	US-PGPUB; USPAT; USOCR; FPRS; EPO; JPO; DERWENT; IBM_TDB	OR	ON	2012/09/07 16:42
S31	1446	347/5.ccls.	US-PGPUB; USPAT; USOCR; FPRS; EPO; JPO; DERWENT; IBM_TDB	OR	ON	2012/09/07 04:42
S32	2126	347/9.ccls.	US-PGPUB; USPAT; USOCR; FPRS; EPO; JPO; DERWENT; IBM_TDB	OR	ON	2012/09/07 04:42
S33	1209	347/10.ccls.	US-PGPUB; USPAT; USOCR; FPRS; EPO; JPO; DERWENT; IBM_TDB	OR	ON	2012/09/07 04:42
S34	1052	347/17.ccls.	US-PGPUB; USPAT; USOCR; FPRS; EPO; JPO; DERWENT; IBM_TDB	OR	ON	2012/09/07 04:42
S35	2980	347/68.ccls.	US-PGPUB; USPAT; USOCR; FPRS; EPO; JPO; DERWENT; IBM_TDB	OR	ON	2012/09/07 04:43
S36	0	(S31 S32) and S33 and S34 and S35	US-PGPUB; USPAT; USOCR; FPRS; EPO; JPO; DERWENT; IBM_TDB	OR	ON	2012/09/07 04:43
S37	2	S33 and S34 and S35	US-PGPUB;	OR	ON	2012/09/07

			USPAT; USOCR; FPRS; EPO; JPO; DERWENT; IBM_TDB			04:43
S38	1	((protect$3 with (coat$3 layer) with ink with (substrate paper sheet medium media web)) and (piezoelectric with actuator with drop$4) and (control$4 with shape$1 with waveform$1) and ((viscosity composition temperature thick$4) with ink) and ((temperature type speed) with (substrate paper sheet medium media web)))	US-PGPUB; USPAT; USOCR; FPRS; EPO; JPO; DERWENT; IBM_TDB	OR	ON	2012/09/07 04:53
S39	1	((protect$3 with (coat$3 layer) with ink) and (piezoelectric with actuator with drop$4) and (control$4 with shape$1 with waveform$1) and ((viscosity composition temperature thick$4) with ink) and ((temperature type speed) with (substrate paper sheet medium media web)))	US-PGPUB; USPAT; USOCR; FPRS; EPO; JPO; DERWENT; IBM_TDB	OR	ON	2012/09/07 04:55
S40	4	((protect$3 with (coat$3 layer) with ink) and (piezoelectric with actuator) and (control$4 with shape$1 with waveform$1) and ((viscosity composition temperature thick$4) with ink) and ((temperature type speed) with (substrate paper sheet medium media web)))	US-PGPUB; USPAT; USOCR; FPRS; EPO; JPO; DERWENT; IBM_TDB	OR	ON	2012/09/07 04:55
S41	46	((protect$3 with (coat$3 layer) with ink) and (piezoelectric with actuator) and (driv$3 with waveform$1) and ((viscosity composition temperature thick$4) with ink) and ((temperature type speed) with (substrate paper sheet medium media web)))	US-PGPUB; USPAT; USOCR; FPRS; EPO; JPO; DERWENT; IBM_TDB	OR	ON	2012/09/07 05:00
S42	31	((protect$3 adj (coat$3 layer) with ink) and (piezoelectric with actuator) and (driv$3 with waveform$1) and ((viscosity composition temperature thick$4) with ink) and ((temperature type speed) with (substrate paper sheet medium media web)))	US-PGPUB; USPAT; USOCR; FPRS; EPO; JPO; DERWENT; IBM_TDB	OR	ON	2012/09/07 05:00
S43	0	((form$3 near protect$3 near (coat$3 layer) near ink) and (piezoelectric with actuator) and (driv$3 with waveform$1) and ((viscosity composition temperature thick$4) with ink) and ((temperature type speed) with (substrate paper sheet medium media web)))	US-PGPUB; USPAT; USOCR; FPRS; EPO; JPO; DERWENT; IBM_TDB	OR	ON	2012/09/07 05:03
S44	12	((form$3 near protect$3 near (coat$3 layer)) and (piezoelectric with actuator) and (driv$3 with waveform$1) and ((viscosity composition temperature thick$4) with ink) and ((temperature type speed) with (substrate paper sheet medium media web)))	US-PGPUB; USPAT; USOCR; FPRS; EPO; JPO; DERWENT; IBM_TDB	OR	ON	2012/09/07 05:04
S45	17	((piezoelectric with actuator) and (control$4 with shape$1 with waveform$1) and ((viscosity composition	US-PGPUB; USPAT; USOCR;	OR	ON	2012/09/07 05:12

		temperature thick$4) with ink) and ((temperature type speed) with (substrate paper sheet medium media web)))	FPRS; EPO; JPO; DERWENT; IBM_TDB			

EAST Search History (Interference)

<This search history is empty>

9/7/2012 5:17:59 PM
C:\Users\ado1\Documents\EAST\Workspaces\12649765.wsp

Search Notes	Application/Control No.	Applicant(s)/Patent Under Reexamination
	12649765	ABERGEL, EDMOND
	Examiner	**Art Unit**
	AN DO	2853

SEARCHED

Class	Subclass	Date	Examiner
347	5-7, 9-11, 14, 17, 19, 68	1/3/2012	AD
	(Updated Above)	(9/7/2012)	(AD)

SEARCH NOTES

Search Notes	Date	Examiner
Updated EAST Text Search	9/7/2012	AD

INTERFERENCE SEARCH

Class	Subclass	Date	Examiner

	/AN DO/ Primary Examiner.Art Unit 2853

Index of Claims	Application/Control No.	Applicant(s)/Patent Under Reexamination
	12649765	ABERGEL, EDMOND
	Examiner	**Art Unit**
	AN DO	2853

✓	Rejected	-	Cancelled	N	Non-Elected	A	Appeal
=	Allowed	÷	Restricted	I	Interference	O	Objected

☐ Claims renumbered in the same order as presented by applicant ☐ CPA ☐ T.D. ☐ R.1.47

CLAIM		DATE								
Final	Original	01/03/2012	09/07/2012							
	1	✓	✓							
	2	✓	✓							
	3	✓	-							
	4	✓	✓							
	5	✓	✓							
	6	✓	✓							
	7	✓	✓							
	8	✓	✓							
	9	✓	✓							
	10	✓	-							
	11	O	✓							
	12	✓	✓							
	13	✓	✓							
	14	✓	✓							
	15	✓	✓							
	16	✓	-							
	17	✓	✓							
	18	✓	✓							
	19	✓	✓							
	20	✓	✓							
	21	✓	✓							
	22	✓	✓							
	23	✓	-							
	24	O	✓							
	25	✓	✓							
	26	✓	✓							
	27	✓	-							
	28	✓	✓							
	29		✓							
	30		✓							
	31		✓							
	32		✓							
	33		✓							
	34		✓							

Docket No.: 1013-070 **PATENT**

IN THE UNITED STATES PATENT AND TRADEMARK OFFICE

In re Application of	:	
	:	
Edmond ABERGEL	:	Confirmation No. 6124
	:	
U.S. Patent Application No. 12/649,765	:	Group Art Unit: 2861
	:	
Filed: December 30, 2009	:	Examiner: AN DO

For: INK JET PRINTER AND METHOD FOR DEPOSITING A PROTECTIVE LAYER ON A SUBSTRATE

AMENDMENT UNDER 37 C.F.R. 1.111

Commissioner for Patents
P.O. Box 1450
Alexandria, VA 22313-1450

Sir:

In response to the Office Action of January 5, 2012, please amend the above-identified application as follows:

AMENDMENTS TO THE CLAIMS:

This listing of claims will replace all prior versions and listings of claims in the application:

Listing of Claims:

1. (Currently Amended) A method of applying a ~~protective layer~~ coating of covering ink to a substrate moving relative to an ink jet nozzle arrangement having a piezoelectric actuator for ~~, the ink jet nozzle arrangement~~ applying ~~to the substrate ink~~ droplets of covering ink to the substrate ~~that form the protective coating~~, the method comprising controlling the shapes of the droplets by controlling the shape of an electric waveform applied to the piezoelectric actuator, ~~controlling the shape of the electric waveform~~ in response to at least one of the following parameters: viscosity of the ink droplets, composition of the covering ink, temperature of the covering ink ~~droplets~~, temperature of the substrate, desired thickness of the layer, type of substrate surface to which the droplets are applied, and relative speed of the substrate and the ink jet nozzle arrangement ~~array~~.

2. (Currently Amended) The method of claim 1 wherein the parameter includes viscosity of the covering ink ~~droplets~~ determined by detecting the viscosity of the ink as the ink flows to the nozzle.

3. (Cancelled)

4. (Currently Amended) The method of claim 1 wherein the parameter includes temperature of the covering ink ~~droplets~~.

5. (Original) The method of claim 1 wherein the parameter includes temperature of the substrate.

6. (Original) The method of claim 1 wherein the parameter includes thickness of the layer.

7. (Original) The method of claim 1 wherein the parameter includes relative speed of the substrate and the ink jet array.

8. (Original) The method of claim 1 wherein the parameter includes type of substrate surface to which the droplets are applied.

9. (Currently Amended) The method of claim 8 wherein the substrate surface type parameter includes chemical composition of the substrate and/or stiffness of the substrate.

10. (Cancelled)

11. (Currently Amended) The method of claim [[8]] 1 wherein the waveform has (a) neutral value associated with the nozzle arrangement being at rest, (b) a first polarity relative to the neutral value for causing the nozzle arrangement to have a volume greater than the neutral value, and (c) a second polarity relative to the neutral value for causing the nozzle arrangement to have a volume less than the neutral value; the waveform first polarity having an intermediate substantially constant amplitude between the neutral value and a peak value, each peak value causing a droplet to be expelled from the nozzle arrangement, the intermediate value having an amplitude and/or duration to dependent on the viscosity of the ink droplet.

12. (Currently Amended) The method of claim 1 further including maintaining the temperature of the covering ink ~~droplets~~ at a predetermined temperature within the ink jet nozzle arrangement.

13. (Currently Amended) The method of claim 1 wherein the ink includes a photoinitiator and further including irradiating the covering ink applied to the substrate with radiation that activates the photoinitiator.

14. (Currently Amended) Apparatus for applying a coating of covering ink ~~protective layer~~ to a substrate comprising ~~an ink jet nozzle arrangement having a piezoelectric actuator,~~ a transport mechanism for causing relative movement between the substrate and [[the]] an ink jet nozzle arrangement, the ink jet nozzle arrangement having a piezoelectric actuator ~~being arranged~~ for applying ~~to the substrate~~ droplets of covering ink to the substrate ~~that form the protective coating~~; an electric source for applying an electric waveform to the piezoelectric actuator, [[the]] said waveform ~~being arranged for~~ controlling the shapes of the droplets, [[the]] said ~~electric source being arranged so the~~ electric waveform [[has]] having a shape determined by at least one of the following parameters: viscosity of the covering ink ~~droplets~~, composition of the covering ink, temperature of the covering ink ~~droplets~~, temperature of the substrate, desired thickness of the layer, type of substrate surface to which the droplets are applied, and relative speed of the substrate and the ink jet nozzle arrangement.

15. (Currently Amended) The apparatus of claim 14 wherein the parameter includes viscosity of the covering ink ~~droplets~~ and the apparatus further includes a detector for detecting the viscosity of the ink as the ink flows to the nozzle.

16. (Cancelled)

17. (Currently Amended) The apparatus of claim 14 wherein the parameter includes temperature of the covering ink ~~droplets~~, and further including a detector for detecting temperature of the ink droplets.

18. (Currently Amended) The apparatus of claim [[17]] 14 wherein the parameter includes temperature of the substrate, and further including a detector for detecting temperature of the substrate.

19. (Original) The apparatus of claim 14 wherein the parameter includes desired thickness of the layer.

20. (Original) The apparatus of claim 14 wherein the parameter includes relative speed of the substrate and the ink jet array.

21. (Original) The apparatus of claim 14 wherein the parameter includes type of substrate surface to which the droplets are applied.

22. (Currently Amended) The apparatus of claim 21 wherein the substrate surface type parameter includes chemical composition of the substrate <u>and/or stiffness of the substrate</u>.

23. (Cancelled)

24. (Original) The apparatus of claim 14 wherein the waveform has (a) neutral value associated with the nozzle arrangement being at rest, (b) a first polarity relative to the neutral value for causing the nozzle arrangement to have a volume greater than the neutral value, and (c) a second polarity relative to the neutral value for causing the nozzle arrangement to have a volume less than the neutral value; the waveform first polarity having an intermediate substantially constant amplitude between the neutral value and a peak value, each peak value causing a droplet to be expelled from the nozzle arrangement, the intermediate value having an amplitude and/or duration dependent on the viscosity of the ink droplet.

25. (Original) The apparatus of claim 14 further including a temperature detector for the ink flowing to the ink jet nozzle arrangement, and a temperature controller responsive to the temperature detector, the temperature controller being arranged for controlling the temperature of the ink flowing in the ink jet nozzle arrangement.

26. (Original) The apparatus of claim 14 further including a memory storing information associated with the shapes of a plurality of the waveforms, an interface for

controlling readout of said information in the memory in response to at least one of the parameters being entered into the interface, and a controller to arranged to be responsive to the information readout of said memory for controlling the electric source for causing the electric source to derive a waveform having a shape determined by the readout information.

27. (Cancelled)

28. (Currently Amended) The apparatus of claim 26 wherein the interface includes a detector machine interface for enabling a detector arrangement for at least one of the following parameters to enter at least one of the following parameters into the interface; viscosity of the covering ink ~~droplets~~, temperature of the covering ink ~~droplets~~, temperature of the substrate, and relative speed of the substrate and the ink jet nozzle arrangement.

29. (New) The method of claim 1 wherein the parameter includes the viscosity of the droplet of covering ink at the outlet of the nozzle.

30. (New) The method of claim 1 wherein the parameter includes viscosity of the covering ink measured by a probe upstream from the piezoelectric actuator and/or from a heater heating the covering ink.

31. (New) The apparatus of claim 14 wherein the parameter includes the viscosity of the droplet of covering ink at the outlet of the nozzle.

32. (New) The apparatus of claim 14 wherein the parameter includes viscosity of the covering ink measured by a probe upstream from the piezoelectric actuator and/or from a heater heating the covering ink.

33. (New) The apparatus of claim 26, wherein the interface includes an operator memory interface for enabling an operator to enter at least one of the parameters into the interface.

34. (New) The apparatus of claim 28, wherein the interface includes an operator memory interface for enabling an operator to enter at least one of the parameters into the interface.

REMARKS

Reconsideration and allowance of the subject application in view of the foregoing amendments and following remarks is respectfully requested.

Claims 1-2, 4-9, 11-15, 17-22, 24-26, and 28-34 are pending. Claims 1, 2, 4, 9, 11-14, 17, 18, 22 and 28 have been amended to more clearly define the claimed subject matter. Claims 9, 15 and 22 have incorporated features of claims 10, 16 and 23, respectively. Claims 3, 10, 16, 23 and 27 have been cancelled without prejudice. Claims 29-34 are new. No new matter is believed to have been added by this amendment.

The indication of allowable subject matter with respect to claims 11 and 24 is noted with appreciation.

Rejections under 35 USC § 102

The rejection of claims 1-4, 12 and 14-17 under 35 U.S.C. 102(b) as anticipated by Hoisington et al. (U.S. 5,502,467) is hereby traversed. A rejection based on 35 U.S.C. §102 requires every element of the claim to be included in the reference, either directly or inherently. *See W.L. Gore & Assocs. v. Garlock*, 721 F. 2d 1540, 220 USPQ 303 (Fed. Cir. 1983), cert. denied, 469 U.S. 851 (1984) "[a]nticipation requires the disclosure in a single prior art reference of each element of the claim under consideration." The Examiner has failed to identify all elements of independent claims 1 and 14 as anticipated by the applied reference.

Claim 1

With respect to claim 1, there are at least two reasons why the Examiner is incorrect.

First, Hoisington does not disclose "the method comprising controlling the shapes of the droplets by controlling the shape of an electric waveform applied to the piezoelectric actuator."

The PTO erroneously asserts that Hoisington discloses "controlling (19) the shape of an electric waveform applied to the piezoelectric actuator." Office Action, p. 2.

In Hoisington, col. 3, lns. 9-28, the control system 19 is connected to (1) the pressure generator 41 by line 44; and (2) two pressure sensors 39 and 40 by lines 43 and 42, respectively. However, in Hoisington, the control system (19) is not connected to the piezoelectric actuator 38. Further, a person having ordinary skill in the art would understand from col. 3 lns. 9-28, and FIGS. 1-3 of Hoisington, that the control system 19 controls a heater 17. Control system 19 computes the difference of pressure measured by the two sensors 39 and 40, so as to control a heater 17 (to cool down or warm up a tank) depending on the difference of pressure measured. Though the control system 19 applies a pressure via the generator 41, the control system 19 does not control the shape of an electric waveform applied to the piezoelectric actuator. Rather, the control system 19 regulates the power supply to a pressure generator and to a heater. For at least this reason, Hoisington does not disclose "the method comprising controlling the shapes of the droplets by controlling the shape of an electric waveform applied to the piezoelectric actuator."

Second, Hoisington does not disclose that the shape of an electric waveform applied to the piezoelectric actuator may be controlled. Rather, Hoisington references, at col. 3, ln. 28 to col. 4 ln. 4, a bridge arrangement of the control system and refers to the excitation of the system by an "excitation frequency ω". However, Hoisington fails to teach or suggest that this frequency can be controlled by the control system and only provides one example of a 8kHz frequency. Hoisington also only details, in column 4 lines 5-21, a value of the corresponding pressure generated by the pressure generator (41). For at least this reason, Hoisington does not disclose "the method comprising controlling the shapes of the droplets by controlling the shape of an electric waveform applied to the piezoelectric actuator."

Based on at least the foregoing reasons, claim 1 is patentable over Hoisington and withdrawal of the rejection is respectfully requested.

Claims 2, 4, 12, 29 and 30

Claims 2, 4, and 12 depend from claim 1, recite further features, and are patentable over the reference for at least the reasons advanced above with respect to claim 1. Withdrawal of the rejection of claims 2, 4 and 12 is respectfully requested. Applicant further submits that claims 29 and 30 depend from claim 1, recite further features, and are patentable over the reference for at least the reasons advanced above with respect to claim 1. Allowance of claims 29 and 30 is respectfully requested.

Claim 14

With respect to claim 14, there are at least two reasons why the Examiner is incorrect. For many of the same reasons stated above with respect to claim 1, claim 14 is also patentable over Hoisington.

First, Hoisington does not disclose "an electric source for applying an electric waveform to the piezoelectric actuator, said waveform controlling the shapes of the droplets." The PTO erroneously asserts that Hoisington discloses "controlling (19) the shape of an electric waveform applied to the piezoelectric actuator." Office Action, p. 2.

In Hoisington, col. 3, lns. 9-28, the control system 19 is connected to (1) the pressure generator 41 by line 44; and (2) two pressure sensors 39 and 40 by lines 43 and 42, respectively. However, in Hoisington, the control system (19) is not connected to the piezoelectric actuator 38. Further, a person having ordinary skill in the art would understand from col. 3 lns. 9-28, and

FIGS. 1-3 of Hoisington, that the control system 19 controls a heater 17. Control system 19 computes the difference of pressure measured by the two sensors 39 and 40, so as to control a heater 17 (to cool down or warm up a tank) depending on the difference of pressure measured. Though the control system 19 applies a pressure via the generator 41, the control system 19 does not control the shape of an electric waveform applied to the piezoelectric actuator. Rather, the control system 19 regulates the power supply to a pressure generator and to a heater. For at least this reason, Hoisington does not disclose "an electric source for applying an electric waveform to the piezoelectric actuator, said waveform controlling the shapes of the droplets."

Second, Hoisington does not disclose that shape of an electric waveform applied to the piezoelectric actuator may be controlled. Rather, Hoisington references, at col. 3, ln. 28 to col. 4 ln. 4, a bridge arrangement of the control system and refers to the excitation of the system by an "excitation frequency ω". However, Hoisington fails to teach or suggest that this frequency can be controlled by the control system and only provides one example of a 8kHz frequency. Hoisington also only details, in column 4 lines 5-21, a value of the corresponding pressure generated by the pressure generator (41). For at least this reason, Hoisington does not disclose "an electric source for applying an electric waveform to the piezoelectric actuator, said waveform controlling the shapes of the droplets."

Based on at least the foregoing reasons, claim 14 is patentable over Hoisington and withdrawal of the rejection is respectfully requested.

Claims 15, 17, 25, 31 and 32

Claims 15, 17 and 25 depend from claim 14, recite further features, and are patentable over the reference for at least the reasons advanced above with respect to claim 14. Withdrawal

of the rejection of claims 15, 17 and 25 is respectfully requested. Applicant further submits that claims 31 and 32 depend from claim 14, recite further features, and are patentable over the reference for at least the reasons advanced above with respect to claim 14. Allowance of claims 31 and 32 is respectfully requested.

Rejections under 35 USC § 103

The rejection of claims 5-10, 13, 18-23 and 26-28 under 35 U.S.C. 103(a) as being obvious over Hoisington in view of Konno (U.S. 7,543,899) is hereby traversed. Obviousness is a question of law based on underlying factual inquiries at least one of which is in dispute. The factual inquiries are set forth in *Graham v. John Deere Co.*, 383 U.S. 1, 148 USPQ 459 (1966). The factual inquiries include:

> (a) determining the scope and content of the prior art;
> (b) ascertaining the differences between the claimed invention and the prior art; and
> (c) resolving the level of ordinary skill in the pertinent art.

The PTO has failed to establish a *prima facie* case of obviousness because the PTO has failed to properly ascertain the differences between the claimed subject matter and the prior art.

In particular, as stated above, claims 1 and 14 are patentable over Hoisington. Claims 5-9 and 13 depend from claim 1 and recite further features. Similarly, claims 18-22, 26, and 28 depend from claim 14 and recite further features. Newly added claims 33 and 34 also depend from claim 14 and recite further features. Konno fails to cure the above-noted deficiencies of Hoisington.

Thus, for at least the reasons advanced above with respect to claims 1 and 14, claims 5-9, 13, 18-22, 26, 28, 33 and 34 are patentable over the applied combination of references. Withdrawal of the rejection of claim 5-9, 13, 18-22, 26 and 26 is respectfully requested. Allowance of newly added claims 33 and 34 is respectfully requested.

In addition, the PTO has not set forth a sufficient rationale or reason for combining these references sufficient for a person having ordinary skill in the art to combine the references. The Examiner alleges that it would have been obvious to one of ordinary skill in the art to include into Hoisington, the "substrate surface type parameters" of Konno, for the purpose of "obtaining the satisfactory images formed on the substrate." However, a person having ordinary skill in the art would not look to Konno to cure the noted deficiencies of Hoisington to arrive at the claimed subject matter. Konno references (at col. 16, lns. 4-18) that the head driver 84 controls the actuator 58 of the print heads 12K, 12M, 12C and 12Y, but is silent about how this control by the head driver is performed on the actuator. Konno thus fails to disclose or suggest the control of shape of the electric waveform applied to the piezoelectric actuator and fails to teach or suggest the various memory information and various sensors or detectors taught by the present application and claimed by the claimed subject matter. As such, the PTO has not set forth a satisfactory *prima facie* case of obviousness.

For at least this reason, claims 5-9, 13, 18-22, 26, 28, 33 and 34 are patentable over the applied combination of references. Withdrawal of the rejection of claim 5-9, 13, 18-22, 26 and 26 is respectfully requested. Allowance of newly added claims 33 and 34 is respectfully requested.

Based on at least the foregoing reasons, claims 5-9, 13, 18-22, 26, 28, 33 and 34 are patentable over Hoisington in view of Konno and withdrawal of the rejections are respectfully requested.

Conclusion

All objections and rejections having been addressed, it is respectfully submitted that the present application should be in condition for allowance and a Notice to that effect is earnestly solicited.

To the extent necessary, a petition for an extension of time under 37 C.F.R. 1.136 is hereby made. Please charge any shortage in fees due in connection with the filing of this paper, including extension of time fees, to Deposit Account 07-1337 and please credit any excess fees to such deposit account.

Respectfully submitted,

LOWE HAUPTMAN HAM & BERNER, LLP

Randy A. Noranbrock
Registration No. 42,940

1700 Diagonal Road, Suite 300
Alexandria, Virginia 22314
(703) 684-1111
(703) 518-5499 Facsimile
Date: July 5, 2012
RAN/BPK/hw

Electronic Patent Application Fee Transmittal

Application Number:	12649765
Filing Date:	30-Dec-2009
Title of Invention:	INK JET PRINTER AND METHOD FOR DEPOSITING A PROTECTIVE LAYER ON A SUBSTRATE
First Named Inventor/Applicant Name:	Edmond ABERGEL
Filer:	Benjamin J. Hauptman/Hannah White
Attorney Docket Number:	1013-070

Filed as Small Entity

Utility under 35 USC 111(a) Filing Fees

Description	Fee Code	Quantity	Amount	Sub-Total in USD($)
Basic Filing:				
Pages:				
Claims:				
Claims in excess of 20	2202	1	30	30
Miscellaneous-Filing:				
Petition:				
Patent-Appeals-and-Interference:				
Post-Allowance-and-Post-Issuance:				
Extension-of-Time:				

Description	Fee Code	Quantity	Amount	Sub-Total in USD($)
Extension - 3 months with $0 paid	2253	1	635	635
Miscellaneous:				
			Total in USD ($)	**665**

Electronic Acknowledgement Receipt

EFS ID:	13183673
Application Number:	12649765
International Application Number:	
Confirmation Number:	6124
Title of Invention:	INK JET PRINTER AND METHOD FOR DEPOSITING A PROTECTIVE LAYER ON A SUBSTRATE
First Named Inventor/Applicant Name:	Edmond ABERGEL
Customer Number:	22429
Filer:	Benjamin J. Hauptman/Hannah White
Filer Authorized By:	Benjamin J. Hauptman
Attorney Docket Number:	1013-070
Receipt Date:	05-JUL-2012
Filing Date:	30-DEC-2009
Time Stamp:	16:15:00
Application Type:	Utility under 35 USC 111(a)

Payment information:

Submitted with Payment	yes
Payment Type	Credit Card
Payment was successfully received in RAM	$665
RAM confirmation Number	2722
Deposit Account	
Authorized User	

File Listing:

Document Number	Document Description	File Name	File Size(Bytes)/ Message Digest	Multi Part /.zip	Pages (if appl.)

1		2012-07-05_Response.pdf	90215 1e1c7e56f461c1f4dfbe8b82e41eb8444db18e83	yes	14
	Multipart Description/PDF files in .zip description				
	Document Description		**Start**	**End**	
	Amendment/Req. Reconsideration-After Non-Final Reject		1	1	
	Claims		2	7	
	Applicant Arguments/Remarks Made in an Amendment		8	14	
Warnings:					
Information:					
2	Fee Worksheet (SB06)	fee-info.pdf	32337 bf14c4b0674247592ec1d92099ae939ad43b8dce	no	2
Warnings:					
Information:					
		Total Files Size (in bytes):	122552		

This Acknowledgement Receipt evidences receipt on the noted date by the USPTO of the indicated documents, characterized by the applicant, and including page counts, where applicable. It serves as evidence of receipt similar to a Post Card, as described in MPEP 503.

<u>New Applications Under 35 U.S.C. 111</u>
If a new application is being filed and the application includes the necessary components for a filing date (see 37 CFR 1.53(b)-(d) and MPEP 506), a Filing Receipt (37 CFR 1.54) will be issued in due course and the date shown on this Acknowledgement Receipt will establish the filing date of the application.

<u>National Stage of an International Application under 35 U.S.C. 371</u>
If a timely submission to enter the national stage of an international application is compliant with the conditions of 35 U.S.C. 371 and other applicable requirements a Form PCT/DO/EO/903 indicating acceptance of the application as a national stage submission under 35 U.S.C. 371 will be issued in addition to the Filing Receipt, in due course.

<u>New International Application Filed with the USPTO as a Receiving Office</u>
If a new international application is being filed and the international application includes the necessary components for an international filing date (see PCT Article 11 and MPEP 1810), a Notification of the International Application Number and of the International Filing Date (Form PCT/RO/105) will be issued in due course, subject to prescriptions concerning national security, and the date shown on this Acknowledgement Receipt will establish the international filing date of the application.

UNITED STATES PATENT AND TRADEMARK OFFICE

UNITED STATES DEPARTMENT OF COMMERCE
United States Patent and Trademark Office
Address: COMMISSIONER FOR PATENTS
P.O. Box 1450
Alexandria, Virginia 22313-1450
www.uspto.gov

APPLICATION NO.	FILING DATE	FIRST NAMED INVENTOR	ATTORNEY DOCKET NO.	CONFIRMATION NO.
12/649,765	12/30/2009	Edmond ABERGEL	1013-070	6124

22429 7590 01/05/2012
LOWE HAUPTMAN HAM & BERNER, LLP
1700 DIAGONAL ROAD
SUITE 300
ALEXANDRIA, VA 22314

EXAMINER
DO, AN H

ART UNIT	PAPER NUMBER
2853	

MAIL DATE	DELIVERY MODE
01/05/2012	PAPER

Please find below and/or attached an Office communication concerning this application or proceeding.

The time period for reply, if any, is set in the attached communication.

PTOL-90A (Rev. 04/07)

Office Action Summary	Application No.	Applicant(s)	
	12/649,765	ABERGEL, EDMOND	
	Examiner	Art Unit	
	AN DO	2853	

-- The MAILING DATE of this communication appears on the cover sheet with the correspondence address --

Period for Reply

A SHORTENED STATUTORY PERIOD FOR REPLY IS SET TO EXPIRE 3 MONTH(S) OR THIRTY (30) DAYS, WHICHEVER IS LONGER, FROM THE MAILING DATE OF THIS COMMUNICATION.

- Extensions of time may be available under the provisions of 37 CFR 1.136(a). In no event, however, may a reply be timely filed after SIX (6) MONTHS from the mailing date of this communication.
- If NO period for reply is specified above, the maximum statutory period will apply and will expire SIX (6) MONTHS from the mailing date of this communication.
- Failure to reply within the set or extended period for reply will, by statute, cause the application to become ABANDONED (35 U.S.C. § 133). Any reply received by the Office later than three months after the mailing date of this communication, even if timely filed, may reduce any earned patent term adjustment. See 37 CFR 1.704(b).

Status

1)☒ Responsive to communication(s) filed on *30 December 2009*.

2a)☐ This action is **FINAL**. 2b)☒ This action is non-final.

3)☐ An election was made by the applicant in response to a restriction requirement set forth during the interview on _____; the restriction requirement and election have been incorporated into this action.

4)☐ Since this application is in condition for allowance except for formal matters, prosecution as to the merits is closed in accordance with the practice under *Ex parte Quayle*, 1935 C.D. 11, 453 O.G. 213.

Disposition of Claims

5)☒ Claim(s) *1-28* is/are pending in the application.

5a) Of the above claim(s) _____ is/are withdrawn from consideration.

6)☐ Claim(s) _____ is/are allowed.

7)☒ Claim(s) *1-10,12-23 and 25-28* is/are rejected.

8)☒ Claim(s) *11 and 24* is/are objected to.

9)☐ Claim(s) _____ are subject to restriction and/or election requirement.

Application Papers

10)☐ The specification is objected to by the Examiner.

11)☒ The drawing(s) filed on *30 December 2009* is/are: a)☒ accepted or b)☐ objected to by the Examiner.

Applicant may not request that any objection to the drawing(s) be held in abeyance. See 37 CFR 1.85(a).

Replacement drawing sheet(s) including the correction is required if the drawing(s) is objected to. See 37 CFR 1.121(d).

12)☐ The oath or declaration is objected to by the Examiner. Note the attached Office Action or form PTO-152.

Priority under 35 U.S.C. § 119

13)☒ Acknowledgment is made of a claim for foreign priority under 35 U.S.C. § 119(a)-(d) or (f).

a)☒ All b)☐ Some * c)☐ None of:

1.☒ Certified copies of the priority documents have been received.

2.☐ Certified copies of the priority documents have been received in Application No. _____.

3.☐ Copies of the certified copies of the priority documents have been received in this National Stage application from the International Bureau (PCT Rule 17.2(a)).

* See the attached detailed Office action for a list of the certified copies not received.

Attachment(s)

1) ☒ Notice of References Cited (PTO-892)

2) ☐ Notice of Draftsperson's Patent Drawing Review (PTO-948)

3) ☒ Information Disclosure Statement(s) (PTO/SB/08) Paper No(s)/Mail Date *12/30/2009*.

4) ☐ Interview Summary (PTO-413) Paper No(s)/Mail Date. _____ .

5) ☐ Notice of Informal Patent Application

6) ☐ Other: _____.

DETAILED ACTION

Priority

1. Receipt is acknowledged of papers submitted under 35 U.S.C. 119(a)-(d), which papers have been placed of record in the file.

Information Disclosure Statement

2. The information disclosure statement (IDS) submitted on 30 December 2009 was filed and is being considered by the examiner.

Claim Rejections - 35 USC § 102

3. The following is a quotation of the appropriate paragraphs of 35 U.S.C. 102 that form the basis for the rejections under this section made in this Office action:

> A person shall be entitled to a patent unless –
>
> (b) the invention was patented or described in a printed publication in this or a foreign country or in public use or on sale in this country, more than one year prior to the date of application for patent in the United States.

4. Claims 1-4, 12 and 14-17 are rejected under 35 U.S.C. 102(b) as being anticipated by Hoisington et al (5,502,467).

Hoisington et al disclose the following claimed features:

Regarding claims 1 and 14, a method and apparatus of applying a protective layer to a substrate moving relative to an ink jet nozzle arrangement (Figures 1-3) having a piezoelectric actuator (41), the ink jet nozzle arrangement applying to the substrate ink droplets that form the protective coating, the method comprising controlling the shapes of the droplets by controlling (19) the shape of an electric waveform applied to the piezoelectric actuator, controlling the shape of the electric waveform in response to at least one of the following parameters: viscosity of the ink

droplets, temperature of the ink droplets, temperature of the substrate, desired thickness of the layer, type of substrate surface to which the droplets are applied, and relative speed of the substrate and the ink jet nozzle array (Abstract).

Regarding claims 2 and 15, wherein the parameter includes viscosity of the ink droplets (Abstract).

Regarding claims 3 and 16, wherein the viscosity of the ink droplets is determined by detecting the viscosity of the ink as the ink flows to the nozzle (column 4, lines 5-20).

Regarding claims 4 and 17, wherein the parameter includes temperature of the ink droplets (Abstract).

Regarding claim 12, further including maintaining the temperature of the droplets at a predetermined temperature (column 3, lines 10-28).

Regarding claim 25, further including a temperature detector (18) for the ink flowing to the ink jet nozzle arrangement, and a temperature controller (19) responsive to the temperature detector (18), the temperature controller (19) being arranged for controlling the temperature of the ink flowing in the ink jet nozzle arrangement.

Claim Rejections - 35 USC § 103

5. The following is a quotation of 35 U.S.C. 103(a) which forms the basis for all obviousness rejections set forth in this Office action:

> (a) A patent may not be obtained though the invention is not identically disclosed or described as set forth in section 102 of this title, if the differences between the subject matter sought to be patented and the prior art are such that the subject matter as a whole would have been obvious at the time the invention was made to a person having ordinary skill in the art to which said subject matter pertains. Patentability shall not be negatived by the manner in which the invention was made.

6. Claims 5-10, 13, 18-23 and 26-28 are rejected under 35 U.S.C. 103(a) as being unpatentable over Hoisington et al (5,502,467) in view of Konno (US 7,543,899).

Hoisington et al disclose the claimed invention except for reciting the following:

Regarding claims 5 and 18, wherein the parameter includes temperature of the substrate.

Regarding claims 6 and 19, wherein the parameter includes thickness of the layer.

Regarding claims 7 and 20, wherein the parameter includes relative speed of the substrate and the ink jet array.

Regarding claims 8 and 21, wherein the parameter includes type of substrate surface to which the droplets are applied.

Regarding claims 9 and 22, wherein the substrate surface type parameter includes chemical composition of the substrate.

Regarding claims 10 and 23, wherein the substrate surface type parameter includes stiffness of the substrate.

Regarding claim 13, wherein the ink includes a photoinitiator and further including irradiating the ink applied to the substrate with radiation that activates the photoinitiator.

Regarding claim 26, further including a memory storing information associated with the shapes of a plurality of the waveforms, an interface for controlling readout of said information in the memory in response to at least one of the parameters being entered into the interface, and a controller to arranged to be responsive to the

information readout of said memory for controlling the electric source for causing the electric source to derive a waveform having a shape determined by the readout information.

Regarding claim 27, wherein the interface includes an operator memory interface for enabling an operator to enter at least one of the parameters into the interface.

Regarding claim 28, wherein the interface includes a detector machine interface for enabling a detector arrangement for at least one of the following parameters to enter at least one of the following parameters into the interface; viscosity of the ink droplets, temperature of the ink droplets, temperature of the substrate, and relative speed of the substrate and the ink jet nozzle arrangement.

Konno teaches the following features:

Regarding claims 5 and 18, wherein the parameter includes temperature of the substrate (Claim 10).

Regarding claims 6 and 19, wherein the parameter includes thickness of the layer (Claim 7).

Regarding claims 7 and 20, wherein the parameter includes relative speed of the substrate and the ink jet array (Claim 10).

Regarding claims 8 and 21, wherein the parameter includes type of substrate surface to which the droplets are applied (Claim 10).

Regarding claims 9 and 22, wherein the substrate surface type parameter includes chemical composition of the substrate (Claim 5).

Regarding claims 10 and 23, wherein the substrate surface type parameter includes stiffness of the substrate (Claim 5).

Regarding claim 13, wherein the ink includes a photoinitiator and further including irradiating the ink applied to the substrate with radiation that activates the photoinitiator (Claim 9).

Regarding claim 26, further including a memory (74) storing information associated with the shapes of a plurality of the waveforms, an interface (70) for controlling readout of said information in the memory in response to at least one of the parameters being entered into the interface, and a controller (80) to arranged to be responsive to the information readout of said memory for controlling the electric source for causing the electric source to derive a waveform having a shape determined by the readout information.

Regarding claim 27, wherein the interface(70) includes an operator memory interface for enabling an operator to enter at least one of the parameters into the interface.

Regarding claim 28, wherein the interface (70) includes a detector machine interface for enabling a detector arrangement for at least one of the following parameters to enter at least one of the following parameters into the interface; viscosity of the ink droplets, temperature of the ink droplets, temperature of the substrate, and relative speed of the substrate and the ink jet nozzle arrangement (column 15, lines 20-57).

It would have been obvious to one of ordinary skill in the art at the time the invention was made to include the substrate surface type parameters as taught by Konno into Hoisington et al, for the purpose of obtaining the satisfactory images being formed on the substrate.

Allowable Subject Matter

7. Claims 11and 24 are objected to as being dependent upon a rejected base claim, but would be allowable if rewritten in independent form including all of the limitations of the base claim and any intervening claims.

The following is a statement of reasons for the indication of allowable subject matter:

The primary reason for the allowance of claims 11 and 24 is the inclusion of the limitations of an apparatus that includes the waveform has a first polarity relative to the neutral value for causing the nozzle arrangement to have a volume greater than the neutral value; the first polarity having an intermediate substantially constant amplitude between the neutral value and a peak value, each peak value causing a droplet to be expelled from the nozzle arrangement, the intermediate value having an amplitude and/or duration dependent on the viscosity of the ink droplet. It is these limitations found in the claims, as they are claimed in the combination of, that has not been found, taught or suggested by the prior art of record which makes these claims allowable over the prior art.

8. The prior art made of record and not relied upon is considered pertinent to applicant's disclosure. Asano et al (US 7,226,141) disclose an inkjet recording

apparatus having a printhead including a temperature detector and a drive waveform controller for controlling the printhead based on the detected temperature.

Contact Information

9. Any inquiry concerning this communication or earlier communications from the examiner should be directed to AN DO whose telephone number is (571)272-2143. The examiner can normally be reached on Monday-Friday (Flexible).

If attempts to reach the examiner by telephone are unsuccessful, the examiner's supervisor, Stephen D. Meier can be reached on 571-272-2149. The fax phone number for the organization where this application or proceeding is assigned is 571-273-8300.

Information regarding the status of an application may be obtained from the Patent Application Information Retrieval (PAIR) system. Status information for published applications may be obtained from either Private PAIR or Public PAIR. Status information for unpublished applications is available through Private PAIR only. For more information about the PAIR system, see http://pair-direct.uspto.gov. Should you have questions on access to the Private PAIR system, contact the Electronic Business Center (EBC) at 866-217-9197 (toll-free). If you would like assistance from a USPTO Customer Service Representative or access to the automated information system, call 800-786-9199 (IN USA OR CANADA) or 571-272-1000.

/An H. Do/
Primary Examiner, Art Unit 2853

Notice of References Cited	Application/Control No. 12/649,765	Applicant(s)/Patent Under Reexamination ABERGEL, EDMOND	
	Examiner AN DO	Art Unit 2853	Page 1 of 1

U.S. PATENT DOCUMENTS

*		Document Number Country Code-Number-Kind Code	Date MM-YYYY	Name	Classification
*	A	US-5,502,467	03-1996	Hoisington et al.	347/6
*	B	US-7,543,899	06-2009	Konno, Masaaki	347/6
*	C	US-7,226,141	06-2007	Asano et al.	347/10
	D	US-			
	E	US-			
	F	US-			
	G	US-			
	H	US-			
	I	US-			
	J	US-			
	K	US-			
	L	US-			
	M	US-			

FOREIGN PATENT DOCUMENTS

*		Document Number Country Code-Number-Kind Code	Date MM-YYYY	Country	Name	Classification
	N					
	O					
	P					
	Q					
	R					
	S					
	T					

NON-PATENT DOCUMENTS

*		Include as applicable: Author, Title Date, Publisher, Edition or Volume, Pertinent Pages)
	U	
	V	
	W	
	X	

*A copy of this reference is not being furnished with this Office action. (See MPEP § 707.05(a).)
Dates in MM-YYYY format are publication dates. Classifications may be US or foreign.

Search Notes	Application/Control No.	Applicant(s)/Patent Under Reexamination
	12649765	ABERGEL, EDMOND
	Examiner	**Art Unit**
	AN DO	2853

SEARCHED

Class	Subclass	Date	Examiner
347	5-7, 9-11, 14, 17, 19, 68	1/3/2012	AD

SEARCH NOTES

Search Notes	Date	Examiner
EAST Text Search	1/3/2012	AD

INTERFERENCE SEARCH

Class	Subclass	Date	Examiner

	/AN DO/ Primary Examiner.Art Unit 2853

PTO/SB/08a (08-07)
Approved for use through 09/30/2007. OMB 0651-0031
U.S. Patent and Trademark Office; U.S. DEPARTMENT OF COMMERCE
Under the Paperwork Reduction Act of 1995, no persons are required to respond to a collection of information unless it contains a valid OMB control number.

INFORMATION DISCLOSURE STATEMENT BY APPLICANT (**Not for submission under 37 CFR 1.99)**	Application Number	
	Filing Date	2009-12-30
	First Named Inventor	Edmond ABERGEL
	Art Unit	
	Examiner Name	
	Attorney Docket Number	1013-070

U.S.PATENTS						
Examiner Initial*	Cite No	Patent Number	Kind Code[1]	Issue Date	Name of Patentee or Applicant of cited Document	Pages,Columns,Lines where Relevant Passages or Relevant Figures Appear
	1	7614725		2009-11-10	Schulmeister	
	2	7451698		2008-11-18	Schneider et al.	
	3	4743924		1988-05-10	Scardovi	
	4	5502467		1996-03-26	Hoisington et al.	
	5	7332037		2009-02-19	Abergel et al.	US Equiv EP1749670
	6	7279506		2007-10-19	Sisler et al.	
If you wish to add additional U.S. Patent citation information please click the Add button.						
U.S.PATENT APPLICATION PUBLICATIONS						
Examiner Initial*	Cite No	Publication Number	Kind Code[1]	Publication Date	Name of Patentee or Applicant of cited Document	Pages,Columns,Lines where Relevant Passages or Relevant Figures Appear

/An Do/ 01/03/2012

EFS Web 2.0.1 ALL REFERENCES CONSIDERED EXCEPT WHERE LINED THROUGH. /A.D./

Receipt date: 12/30/2009	Application Number	12649765 - GAU: 2853
INFORMATION DISCLOSURE STATEMENT BY APPLICANT (**Not for submission under 37 CFR 1.99)**	Filing Date	2009-12-30
	First Named Inventor	Edmond ABERGEL
	Art Unit	
	Examiner Name	
	Attorney Docket Number	1013-070

	1	20040189732		2004-09-30	Usuda			
If you wish to add additional U.S. Published Application citation information please click the Add button.								
FOREIGN PATENT DOCUMENTS								
Examiner Initial*	Cite No	Foreign Document Number[3]	Country Code[2] ¡	Kind Code[4]	Publication Date	Name of Patentee or Applicant of cited Document	Pages,Columns,Lines where Relevant Passages or Relevant Figures Appear	T[5]
	1	1749670	EP		2007-02-07	MGI France		☐
	2	1621260	EP		2006-02-01	Toshiba Tec Kabushiki Kaisha		☐
	3	1186410	EP		2002-03-13	Seiko Epson Corporation		☐
If you wish to add additional Foreign Patent Document citation information please click the Add button								
NON-PATENT LITERATURE DOCUMENTS								
Examiner Initials*	Cite No	Include name of the author (in CAPITAL LETTERS), title of the article (when appropriate), title of the item (book, magazine, journal, serial, symposium, catalog, etc), date, pages(s), volume-issue number(s), publisher, city and/or country where published.						T[5]
	1							☐
If you wish to add additional non-patent literature document citation information please click the Add button								

EXAMINER SIGNATURE			
Examiner Signature	/An Do/	Date Considered	01/03/2012

*EXAMINER: Initial if reference considered, whether or not citation is in conformance with MPEP 609. Draw line through a citation if not in conformance and not considered. Include copy of this form with next communication to applicant.

EFS Web 2.0.1

ALL REFERENCES CONSIDERED EXCEPT WHERE LINED THROUGH. /A.D./

Receipt date: 12/30/2009	Application Number	12649765 - GAU: 2853
INFORMATION DISCLOSURE STATEMENT BY APPLICANT (**Not for submission under 37 CFR 1.99)**	Filing Date	2009-12-30
	First Named Inventor	Edmond ABERGEL
	Art Unit	
	Examiner Name	
	Attorney Docket Number	1013-070

[1] See Kind Codes of USPTO Patent Documents at www.USPTO.GOV or MPEP 901.04. [2] Enter office that issued the document, by the two-letter code (WIPO Standard ST.3). [3] For Japanese patent documents, the indication of the year of the reign of the Emperor must precede the serial number of the patent document. [4] Kind of document by the appropriate symbols as indicated on the document under WIPO Standard ST.16 if possible. [5] Applicant is to place a check mark here if English language translation is attached.

/An Do/ 01/03/2012

EFS Web 2.0.1 ALL REFERENCES CONSIDERED EXCEPT WHERE LINED THROUGH. /A.D./

/A.D./ 1/3/2012

EAST Search History

EAST Search History (Prior Art)

Ref #	Hits	Search Query	DBs	Default Operator	Plurals	Time Stamp
S1	1338	347/5.ccls.	US-PGPUB; USPAT; USOCR; FPRS; EPO; JPO; DERWENT; IBM_TDB	OR	ON	2012/01/03 01:20
S2	634	347/6.ccls.	US-PGPUB; USPAT; USOCR; FPRS; EPO; JPO; DERWENT; IBM_TDB	OR	ON	2012/01/03 01:21
S3	1418	347/7.ccls.	US-PGPUB; USPAT; USOCR; FPRS; EPO; JPO; DERWENT; IBM_TDB	OR	ON	2012/01/03 01:21
S4	1953	347/9.ccls.	US-PGPUB; USPAT; USOCR; FPRS; EPO; JPO; DERWENT; IBM_TDB	OR	ON	2012/01/03 01:21
S5	1108	347/10.ccls.	US-PGPUB; USPAT; USOCR; FPRS; EPO; JPO; DERWENT; IBM_TDB	OR	ON	2012/01/03 01:21
S6	739	347/11.ccls.	US-PGPUB; USPAT; USOCR; FPRS; EPO; JPO; DERWENT; IBM_TDB	OR	ON	2012/01/03 01:21
S7	2306	347/14.ccls.	US-PGPUB; USPAT; USOCR; FPRS; EPO; JPO; DERWENT; IBM_TDB	OR	ON	2012/01/03 01:22
S8	987	347/17.ccls.	US-PGPUB; USPAT; USOCR; FPRS; EPO; JPO; DERWENT; IBM_TDB	OR	ON	2012/01/03 01:22
S9	4248	347/19.ccls.	US-PGPUB; USPAT;	OR	ON	2012/01/03 01:22

			USOCR; FPRS; EPO; JPO; DERWENT; IBM_TDB			
S10	2878	347/68.ccls.	US-PGPUB; USPAT; USOCR; FPRS; EPO; JPO; DERWENT; IBM_TDB	OR	ON	2012/01/03 01:22
S11	4	S1 and (S2 S3) and (S4 S5 S6 S7) and S8 and (S9 S10)	US-PGPUB; USPAT; USOCR; FPRS; EPO; JPO; DERWENT; IBM_TDB	OR	ON	2012/01/03 01:31
S12	8	((EDMOND) near2 (ABERGEL)).INV.	US-PGPUB; USPAT	OR	ON	2012/01/03 01:32
S13	8	US-1013070-$.DID. OR US-7614725-$.DID. OR US-7451698-$.DID. OR US-4743924-$.DID. OR US-5502467-$.DID. OR US-7332037-$.DID. OR EP-1749670-$.DID. OR EP-67279506-$.DID. OR US-7279506-$.DID.	US-PGPUB; USPAT; USOCR	OR	ON	2012/01/03 01:49
S14	1	((ink near jet) and (piezoelectric with actuator) and (protect$3 with (layer coat$3)) and (control$4 with waveform with viscosity with temperature with thickness with speed))	US-PGPUB; USPAT; USOCR; FPRS; EPO; JPO; DERWENT; IBM_TDB	OR	ON	2012/01/03 06:11
S15	1	((piezoelectric with actuator) and (protect$3 with (layer coat$3)) and (control$4 with waveform with viscosity with temperature with thickness with speed))	US-PGPUB; USPAT; USOCR; FPRS; EPO; JPO; DERWENT; IBM_TDB	OR	ON	2012/01/03 06:11
S16	1	((protect$3 with (layer coat$3)) and (control$4 with waveform with viscosity with temperature with thickness with speed))	US-PGPUB; USPAT; USOCR; FPRS; EPO; JPO; DERWENT; IBM_TDB	OR	ON	2012/01/03 06:12
S17	1	(control$4 with waveform with viscosity with temperature with thickness with speed)	US-PGPUB; USPAT; USOCR; FPRS; EPO; JPO; DERWENT; IBM_TDB	OR	ON	2012/01/03 06:12
S18	2	(control$4 with waveform with viscosity with temperature with speed)	US-PGPUB; USPAT; USOCR; FPRS; EPO; JPO; DERWENT; IBM_TDB	OR	ON	2012/01/03 06:12
S19	0	(control$4 with waveform with viscosity) same (temperature with (media medium sheet paper) with (drop$1 droplet$1) with speed)	US-PGPUB; USPAT; USOCR; FPRS; EPO; JPO; DERWENT; IBM_TDB	OR	ON	2012/01/03 06:18

S20	2	(control$4 with waveform with viscosity) and (temperature with (media medium sheet paper) with (drop$1 droplet$1) with speed)	US-PGPUB; USPAT; USOCR; FPRS; EPO; JPO; DERWENT; IBM_TDB	OR	ON	2012/01/03 06:19
S21	1	((protect$3 with (layer coat$3)) and (control$4 with waveform with viscosity) and (temperature with thickness with speed))	US-PGPUB; USPAT; USOCR; FPRS; EPO; JPO; DERWENT; IBM_TDB	OR	ON	2012/01/03 06:25
S22	1	((layer coat$3) and (control$4 with waveform with viscosity) and (temperature with thickness with speed))	US-PGPUB; USPAT; USOCR; FPRS; EPO; JPO; DERWENT; IBM_TDB	OR	ON	2012/01/03 06:25
S23	1918	((layer coat$3) and (control$4 with waveform with (viscosity temperature thickness speed)))	US-PGPUB; USPAT; USOCR; FPRS; EPO; JPO; DERWENT; IBM_TDB	OR	ON	2012/01/03 06:26
S24	1	((layer coat$3) and (control$4 same waveform same viscosity same temperature same thickness same speed))	US-PGPUB; USPAT; USOCR; FPRS; EPO; JPO; DERWENT; IBM_TDB	OR	ON	2012/01/03 06:27
S25	7873	((layer coat$3) and (control$4 same waveform same (viscosity temperature thickness speed)))	US-PGPUB; USPAT; USOCR; FPRS; EPO; JPO; DERWENT; IBM_TDB	OR	ON	2012/01/03 06:30
S26	1489	((layer coat$3) same control$4 same waveform same (viscosity temperature thickness speed))	US-PGPUB; USPAT; USOCR; FPRS; EPO; JPO; DERWENT; IBM_TDB	OR	ON	2012/01/03 06:30
S27	81	(protect$3 same (layer coat$3) same control$4 same waveform same (viscosity temperature thickness speed))	US-PGPUB; USPAT; USOCR; FPRS; EPO; JPO; DERWENT; IBM_TDB	OR	ON	2012/01/03 06:31
S28	5	(protect$3 same (layer coat$3) same control$4 same waveform same (viscosity temperature thickness speed)).clm.	US-PGPUB; USPAT; USOCR; FPRS; EPO; JPO; DERWENT; IBM_TDB	OR	ON	2012/01/03 06:31
S29	261	(control$4 with viscosity) and (temperature with (media medium sheet paper) with (drop$1 droplet$1) with speed)	US-PGPUB; USPAT; USOCR; FPRS; EPO; JPO; DERWENT; IBM_TDB	OR	ON	2012/01/03 09:28

S30	1	(control$4 with viscosity) and (temperature with (media medium sheet paper) with (drop$1 droplet$1) with speed).clm.	US-PGPUB; USPAT; USOCR; FPRS; EPO; JPO; DERWENT; IBM_TDB	OR	ON	2012/01/03 09:28

EAST Search History (Interference)

<This search history is empty>

1/3/2012 11:03:50 AM
C:\Users\ado1\Documents\EAST\Workspaces\12649765.wsp

UNITED STATES PATENT AND TRADEMARK OFFICE

UNITED STATES DEPARTMENT OF COMMERCE
United States Patent and Trademark Office
Address: COMMISSIONER FOR PATENTS
P.O. Box 1450
Alexandria, Virginia 22313-1450
www.uspto.gov

BIB DATA SHEET

CONFIRMATION NO. 6124

SERIAL NUMBER	FILING or 371(c) DATE	CLASS	GROUP ART UNIT	ATTORNEY DOCKET NO.
12/649,765	12/30/2009 **RULE**	347	2853	1013-070

APPLICANTS
Edmond ABERGEL, Paris, FRANCE;

**** CONTINUING DATA ***************************

**** FOREIGN APPLICATIONS ***************************
FRANCE 08 07500 12/30/2008

**** IF REQUIRED, FOREIGN FILING LICENSE GRANTED **** ** SMALL ENTITY **
01/14/2010

Foreign Priority claimed	35 USC 119(a-d) conditions met	Verified and Acknowledged	STATE OR COUNTRY	SHEETS DRAWINGS	TOTAL CLAIMS	INDEPENDENT CLAIMS
☑ Yes ☐ No	☑ Yes ☐ No	/AN H DO/ Examiner's Signature ☐ Met after Allowance Initials	FRANCE	2	28	2

ADDRESS

LOWE HAUPTMAN HAM & BERNER, LLP
1700 DIAGONAL ROAD
SUITE 300
ALEXANDRIA, VA 22314
UNITED STATES

TITLE

INK JET PRINTER AND METHOD FOR DEPOSITING A PROTECTIVE LAYER ON A SUBSTRATE

FILING FEE RECEIVED		
735	FEES: Authority has been given in Paper No._____ to charge/credit DEPOSIT ACCOUNT No._____ for following:	☐ All Fees ☐ 1.16 Fees (Filing) ☐ 1.17 Fees (Processing Ext. of time) ☐ 1.18 Fees (Issue) ☐ Other _____ ☐ Credit

Index of Claims	Application/Control No.	Applicant(s)/Patent Under Reexamination
	12649765	ABERGEL, EDMOND
	Examiner	**Art Unit**
	AN DO	2853

✓	Rejected	-	Cancelled	N	Non-Elected	A	Appeal
=	Allowed	÷	Restricted	I	Interference	O	Objected

☐ Claims renumbered in the same order as presented by applicant ☐ CPA ☐ T.D. ☐ R.1.47

CLAIM		DATE								
Final	Original	01/03/2012								
	1	✓								
	2	✓								
	3	✓								
	4	✓								
	5	✓								
	6	✓								
	7	✓								
	8	✓								
	9	✓								
	10	✓								
	11	O								
	12	✓								
	13	✓								
	14	✓								
	15	✓								
	16	✓								
	17	✓								
	18	✓								
	19	✓								
	20	✓								
	21	✓								
	22	✓								
	23	✓								
	24	O								
	25	✓								
	26	✓								
	27	✓								
	28	✓								

UNITED STATES PATENT AND TRADEMARK OFFICE

UNITED STATES DEPARTMENT OF COMMERCE
United States Patent and Trademark Office
Address: COMMISSIONER FOR PATENTS
P.O. Box 1450
Alexandria, Virginia 22313-1450
www.uspto.gov

APPLICATION NUMBER	FILING OR 371(C) DATE	FIRST NAMED APPLICANT	ATTY. DOCKET NO./TITLE
12/649,765	12/30/2009	Edmond ABERGEL	1013-070

CONFIRMATION NO. 6124

22429
LOWE HAUPTMAN HAM & BERNER, LLP
1700 DIAGONAL ROAD
SUITE 300
ALEXANDRIA, VA 22314

PUBLICATION NOTICE

OC000000042376821

Title:INK JET PRINTER AND METHOD FOR DEPOSITING A PROTECTIVE LAYER ON A SUBSTRATE

Publication No.US-2010-0165024-A1
Publication Date:07/01/2010

NOTICE OF PUBLICATION OF APPLICATION

The above-identified application will be electronically published as a patent application publication pursuant to 37 CFR 1.211, et seq. The patent application publication number and publication date are set forth above.

The publication may be accessed through the USPTO's publically available Searchable Databases via the Internet at www.uspto.gov. The direct link to access the publication is currently http://www.uspto.gov/patft/.

The publication process established by the Office does not provide for mailing a copy of the publication to applicant. A copy of the publication may be obtained from the Office upon payment of the appropriate fee set forth in 37 CFR 1.19(a)(1). Orders for copies of patent application publications are handled by the USPTO's Office of Public Records. The Office of Public Records can be reached by telephone at (703) 308-9726 or (800) 972-6382, by facsimile at (703) 305-8759, by mail addressed to the United States Patent and Trademark Office, Office of Public Records, Alexandria, VA 22313-1450 or via the Internet.

In addition, information on the status of the application, including the mailing date of Office actions and the dates of receipt of correspondence filed in the Office, may also be accessed via the Internet through the Patent Electronic Business Center at www.uspto.gov using the public side of the Patent Application Information and Retrieval (PAIR) system. The direct link to access this status information is currently http://pair.uspto.gov/. Prior to publication, such status information is confidential and may only be obtained by applicant using the private side of PAIR.

Further assistance in electronically accessing the publication, or about PAIR, is available by calling the Patent Electronic Business Center at 1-866-217-9197.

Office of Data Managment, Application Assistance Unit (571) 272-4000, or (571) 272-4200, or 1-888-786-0101

UNITED STATES PATENT AND TRADEMARK OFFICE

UNITED STATES DEPARTMENT OF COMMERCE
United States Patent and Trademark Office
Address: COMMISSIONER FOR PATENTS
P.O. Box 1450
Alexandria, Virginia 22313-1450
www.uspto.gov

APPLICATION NUMBER	FILING or 371(c) DATE	GRP ART UNIT	FIL FEE REC'D	ATTY.DOCKET.NO	TOT CLAIMS	IND CLAIMS
12/649,765	12/30/2009	2861	735	1013-070	28	2

CONFIRMATION NO. 6124

UPDATED FILING RECEIPT

22429
LOWE HAUPTMAN HAM & BERNER, LLP
1700 DIAGONAL ROAD
SUITE 300
ALEXANDRIA, VA 22314

OC000000040436525

Date Mailed: 03/05/2010

Receipt is acknowledged of this non-provisional patent application. The application will be taken up for examination in due course. Applicant will be notified as to the results of the examination. Any correspondence concerning the application must include the following identification information: the U.S. APPLICATION NUMBER, FILING DATE, NAME OF APPLICANT, and TITLE OF INVENTION. Fees transmitted by check or draft are subject to collection. Please verify the accuracy of the data presented on this receipt. **If an error is noted on this Filing Receipt, please submit a written request for a Filing Receipt Correction. Please provide a copy of this Filing Receipt with the changes noted thereon. If you received a "Notice to File Missing Parts" for this application, please submit any corrections to this Filing Receipt with your reply to the Notice. When the USPTO processes the reply to the Notice, the USPTO will generate another Filing Receipt incorporating the requested corrections**

Applicant(s)
Edmond ABERGEL, Paris, FRANCE;

Assignment For Published Patent Application
M.G.I. USA, Inc., Melbourne, FL

Power of Attorney: The patent practitioners associated with Customer Number 22429

Domestic Priority data as claimed by applicant

Foreign Applications
FRANCE 08 07500 12/30/2008

If Required, Foreign Filing License Granted: 01/14/2010

The country code and number of your priority application, to be used for filing abroad under the Paris Convention, is **US 12/649,765**

Projected Publication Date: 07/01/2010

Non-Publication Request: No

Early Publication Request: No
**** SMALL ENTITY ****

Title

INK JET PRINTER AND METHOD FOR DEPOSITING A PROTECTIVE LAYER ON A SUBSTRATE

Preliminary Class

347

PROTECTING YOUR INVENTION OUTSIDE THE UNITED STATES

Since the rights granted by a U.S. patent extend only throughout the territory of the United States and have no effect in a foreign country, an inventor who wishes patent protection in another country must apply for a patent in a specific country or in regional patent offices. Applicants may wish to consider the filing of an international application under the Patent Cooperation Treaty (PCT). An international (PCT) application generally has the same effect as a regular national patent application in each PCT-member country. The PCT process **simplifies** the filing of patent applications on the same invention in member countries, but **does not result** in a grant of "an international patent" and does not eliminate the need of applicants to file additional documents and fees in countries where patent protection is desired.

Almost every country has its own patent law, and a person desiring a patent in a particular country must make an application for patent in that country in accordance with its particular laws. Since the laws of many countries differ in various respects from the patent law of the United States, applicants are advised to seek guidance from specific foreign countries to ensure that patent rights are not lost prematurely.

Applicants also are advised that in the case of inventions made in the United States, the Director of the USPTO must issue a license before applicants can apply for a patent in a foreign country. The filing of a U.S. patent application serves as a request for a foreign filing license. The application's filing receipt contains further information and guidance as to the status of applicant's license for foreign filing.

Applicants may wish to consult the USPTO booklet, "General Information Concerning Patents" (specifically, the section entitled "Treaties and Foreign Patents") for more information on timeframes and deadlines for filing foreign patent applications. The guide is available either by contacting the USPTO Contact Center at 800-786-9199, or it can be viewed on the USPTO website at http://www.uspto.gov/web/offices/pac/doc/general/index.html.

For information on preventing theft of your intellectual property (patents, trademarks and copyrights), you may wish to consult the U.S. Government website, http://www.stopfakes.gov. Part of a Department of Commerce initiative, this website includes self-help "toolkits" giving innovators guidance on how to protect intellectual property in specific countries such as China, Korea and Mexico. For questions regarding patent enforcement issues, applicants may call the U.S. Government hotline at 1-866-999-HALT (1-866-999-4158).

LICENSE FOR FOREIGN FILING UNDER

Title 35, United States Code, Section 184

Title 37, Code of Federal Regulations, 5.11 & 5.15

GRANTED

The applicant has been granted a license under 35 U.S.C. 184, if the phrase "IF REQUIRED, FOREIGN FILING LICENSE GRANTED" followed by a date appears on this form. Such licenses are issued in all applications where the conditions for issuance of a license have been met, regardless of whether or not a license may be required as

set forth in 37 CFR 5.15. The scope and limitations of this license are set forth in 37 CFR 5.15(a) unless an earlier license has been issued under 37 CFR 5.15(b). The license is subject to revocation upon written notification. The date indicated is the effective date of the license, unless an earlier license of similar scope has been granted under 37 CFR 5.13 or 5.14.

This license is to be retained by the licensee and may be used at any time on or after the effective date thereof unless it is revoked. This license is automatically transferred to any related applications(s) filed under 37 CFR 1.53(d). This license is not retroactive.

The grant of a license does not in any way lessen the responsibility of a licensee for the security of the subject matter as imposed by any Government contract or the provisions of existing laws relating to espionage and the national security or the export of technical data. Licensees should apprise themselves of current regulations especially with respect to certain countries, of other agencies, particularly the Office of Defense Trade Controls, Department of State (with respect to Arms, Munitions and Implements of War (22 CFR 121-128)); the Bureau of Industry and Security, Department of Commerce (15 CFR parts 730-774); the Office of Foreign AssetsControl, Department of Treasury (31 CFR Parts 500+) and the Department of Energy.

NOT GRANTED

No license under 35 U.S.C. 184 has been granted at this time, if the phrase "IF REQUIRED, FOREIGN FILING LICENSE GRANTED" DOES NOT appear on this form. Applicant may still petition for a license under 37 CFR 5.12, if a license is desired before the expiration of 6 months from the filing date of the application. If 6 months has lapsed from the filing date of this application and the licensee has not received any indication of a secrecy order under 35 U.S.C. 181, the licensee may foreign file the application pursuant to 37 CFR 5.15(b).

Docket No.: 1013-070 **PATENT**

IN THE UNITED STATES PATENT AND TRADEMARK OFFICE

In re Application of	:	
	:	
Edmond ABERGEL	:	Confirmation No. 6124
	:	
U.S. Patent Application No. 12/649,765	:	Group Art Unit: 2861
	:	
Filed: December 30, 2009	:	Examiner: ----------

For: INK JET PRINTER AND METHOD FOR DEPOSITING A PROTECTIVE LAYER ON A SUBSTRATE

RESPONSE TO NOTICE TO FILE MISSING PARTS

Mail Stop Missing Parts
Commissioner of Patents
P.O. Box 1450
Alexandria, VA 22313-1450

Sir:

This is in response to the Notice of Missing Parts of Application dated January 19, 2010, the period for response to which is set to expire on March 19, 2010. Submitted herewith are the following:

- Executed Declaration and Power of Attorney
- Late Declaration Surcharge: - Small Entity $65.00
- Replacement Figs. 1-2

Electronic payment via credit card payment in the amount of $65.00 is authorized. Please charge any deficiencies in the enclosed fees to Deposit Account 07-1337 and direct any inquiries in connection with this application directly to the undersigned.

Respectfully submitted,

LOWE HAUPTMAN HAM & BERNER, LLP

/Randy A. Noranbrock/

Randy A. Noranbrock
Registration No. 42,940

1700 Diagonal Road, Suite 300
Alexandria, Virginia 22314
(703) 684-1111 AML/cjf
Facsimile: (703) 518-5499
February 25, 2010

DOCKET NO. 1013-070

DECLARATION AND POWER OF ATTORNEY

As a below-named inventor, I hereby declare that my residence, post office address and citizenship are as stated below next to my name; I believe that I am the original, first and sole inventor (if only one name is listed below) or an original, first and joint inventor (if plural names are listed below) of the subject matter which is claimed and for which a patent is sought on the invention (Design, if applicable) entitled: **INK JET PRINTER AND METHOD FOR DEPOSITING A PROTECTIVE LAYER ON A SUBSTRATE** the specification of which is attached hereto unless one of the following boxes is checked:

☒ was filed on **December 30, 2009** as U.S. Patent Application No. **12/649,765**

☐ was filed on _____ as International Application (PCT) No. _____, and was amended on _____ (if applicable).

I hereby state that I have reviewed and understand the contents of the above-identified specification, including the claims, as amended by any amendment(s) referred to above. I acknowledge the duty to disclose information that is material to patentability as defined in *Title 37, Code of Federal Regulations, § 1.56*. I hereby claim foreign priority benefits under *Title 35, United States Code § 119* of any foreign application(s) for patent or inventor's certificate listed below and have also identified below any foreign application for patent or inventor's certificate having a filing date before that of the application on which the priority is claimed.

PRIOR FOREIGN APPLICATION(S)

NUMBER	COUNTRY	DAY/MONTH/YEAR FILED	PRIORITY CLAIMED
08 07500	**FR**	**December 30, 2008**	☒ Yes ☐ No
			☐ Yes ☐ No

I hereby claim the benefit under *Title 35, United States Code, § 120* of any United States application(s) or PCT international application(s) designating The United States of America listed below and, insofar as the subject matter of each of the claims of this application is not disclosed in that/those prior application(s) in the manner provided by the first paragraph of *Title 35, United States Code, § 112*, I acknowledge the duty to disclose information that is material to patentability as defined in *Title 37, Code of Federal Regulations, § 1.56* which occurred between the filing date of the prior application(s) and the national or PCT international filing date of this application:

APPLICATION NUMBER	FILING DATE	STATUS (Patented, Pending or Abandoned)

I hereby declare that all statements made herein of my own knowledge are true and that all statements made on information and belief are believed to be true; and further that these statements were made with the knowledge that willful false statements and the like so made are punishable by fine, or imprisonment, or both, under *Section 1001 of Title 18 of the United States Code*, and that such willful false statements may jeopardize the validity of the application or any patent issued thereon.

POWER OF ATTORNEY: I (We) hereby appoint as my (our) attorneys all practitioners associated with customer number 22429, with full powers of substitution and revocation, to prosecute this application and transact all business in the Patent and Trademark Office.

Send correspondence to: **LOWE HAUPTMAN Ham & BERNER, LLP**
CUSTOMER NO. 22429
1700 Diagonal Road, Suite 300
Alexandria, Virginia 22314

TELEPHONE CALLS TO:
Allan M. Lowe
(703) 684-1111

I hereby authorize the U.S. attorneys and agents named herein to accept and follow instructions from **CABINET DEBAY** to any actions to be taken in the U.S. Patent and Trademark Office regarding this application without direct communication between the U.S. attorneys and the undersigned. In the event of a change in the person(s) from whom instructions may be taken, the U.S. attorneys will be so notified by the undersigned.

☐ *See following page(s) for additional joint inventors.*

Full name of sole or first inventor: **Edmond ABERGEL**
Inventor's signature: Date: 3/01/2010
Residence: **Paris, France**
Citizenship: **French**
Post Office Address: 86, Cours de Vincennes, Paris, France 75012

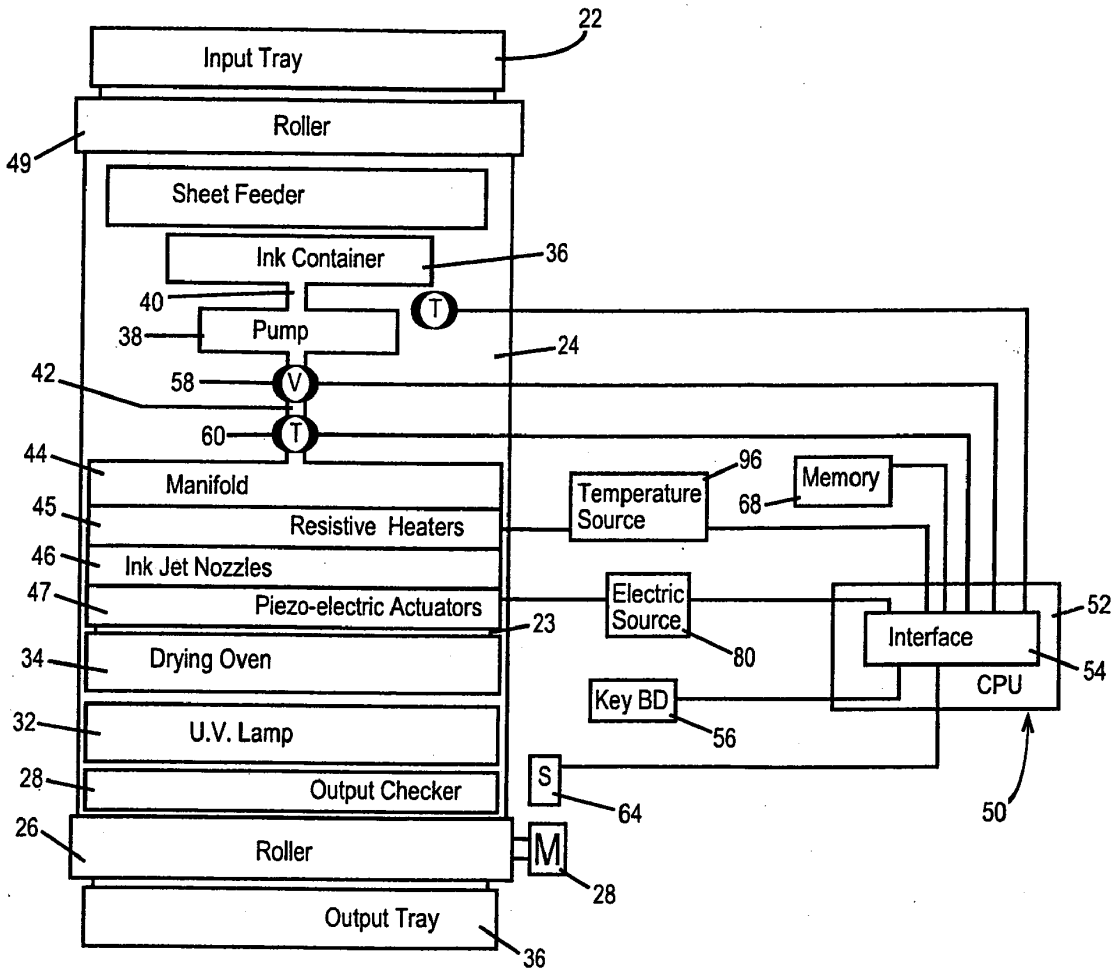
Input Tray
22
Roller
49
Sheet Feeder
Ink Container
36
40
T
38
Pump
24
42
58
V
60
T
44
Manifold
96
Memory
Temperature Source
68
45
Resistive Heaters
46
Ink Jet Nozzles
47
Piezo-electric Actuators
Electric Source
52
23
Interface
34
Drying Oven
80
54
CPU
Key BD
32
U.V. Lamp
56
28
Output Checker
S
64
50
26
Roller
M
28
Output Tray
36

Figure 1

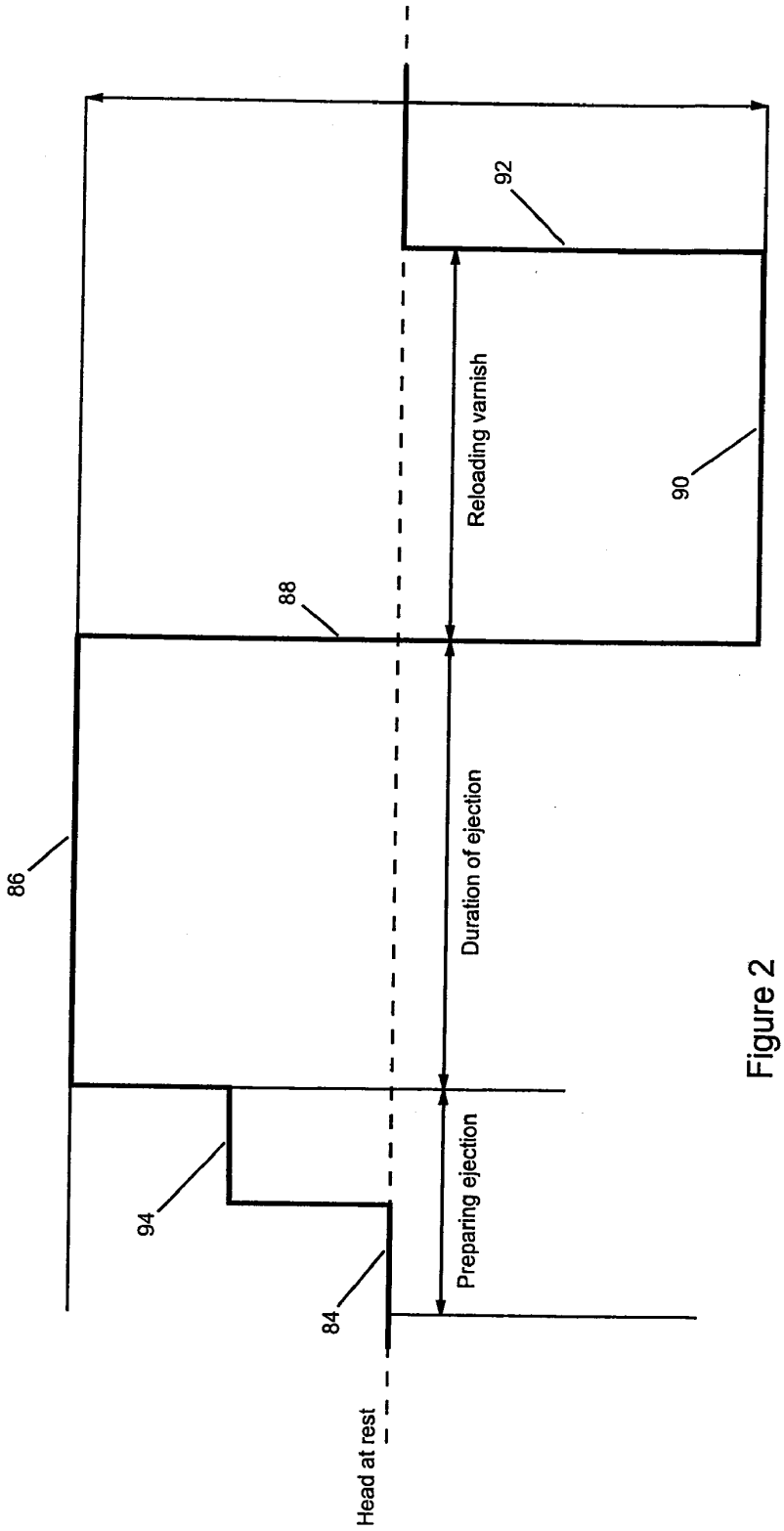
86
88
92
90
94
84
Reloading varnish
Duration of ejection
Preparing ejection
Head at rest

Figure 2

Electronic Patent Application Fee Transmittal

Application Number:	12649765
Filing Date:	30-Dec-2009
Title of Invention:	INK JET PRINTER AND METHOD FOR DEPOSITING A PROTECTIVE LAYER ON A SUBSTRATE
First Named Inventor/Applicant Name:	Edmond ABERGEL
Filer:	Allan M. Lowe/Christina Frye
Attorney Docket Number:	1013-070

Filed as Small Entity

Utility under 35 USC 111(a) Filing Fees

Description	Fee Code	Quantity	Amount	Sub-Total in USD($)
Basic Filing:				
Pages:				
Claims:				
Miscellaneous-Filing:				
Late filing fee for oath or declaration	2051	1	65	65
Petition:				
Patent-Appeals-and-Interference:				
Post-Allowance-and-Post-Issuance:				
Extension-of-Time:				

Description	Fee Code	Quantity	Amount	Sub-Total in USD($)
Miscellaneous:				
			Total in USD ($)	**65**

Electronic Acknowledgement Receipt

EFS ID:	7086902
Application Number:	12649765
International Application Number:	
Confirmation Number:	6124
Title of Invention:	INK JET PRINTER AND METHOD FOR DEPOSITING A PROTECTIVE LAYER ON A SUBSTRATE
First Named Inventor/Applicant Name:	Edmond ABERGEL
Customer Number:	22429
Filer:	Allan M. Lowe/Christina Frye
Filer Authorized By:	Allan M. Lowe
Attorney Docket Number:	1013-070
Receipt Date:	25-FEB-2010
Filing Date:	30-DEC-2009
Time Stamp:	14:06:51
Application Type:	Utility under 35 USC 111(a)

Payment information:

Submitted with Payment	yes
Payment Type	Credit Card
Payment was successfully received in RAM	$65
RAM confirmation Number	369
Deposit Account	
Authorized User	

File Listing:

Document Number	Document Description	File Name	File Size(Bytes)/ Message Digest	Multi Part /.zip	Pages (if appl.)

1	Applicant Response to Pre-Exam Formalities Notice	2010-02-25Resp2NOMP.pdf	21819 c28058610440a6914c50bde98de04781a791ffb1	no	1
Warnings:					
Information:					
2	Oath or Declaration filed	Declaration.pdf	77908 58186d501199b68a99d5aee270097a0cc3e1fc70	no	1
Warnings:					
Information:					
3	Drawings-only black and white line drawings	ReplDrwgs.pdf	32068 6a9747aa15782db04221820e015e131f75c84342	no	2
Warnings:					
Information:					
4	Fee Worksheet (PTO-875)	fee-info.pdf	30309 705d44d267f38d44abbbaf2f5569508383d813c1	no	2
Warnings:					
Information:					
			Total Files Size (in bytes):	162104	

This Acknowledgement Receipt evidences receipt on the noted date by the USPTO of the indicated documents, characterized by the applicant, and including page counts, where applicable. It serves as evidence of receipt similar to a Post Card, as described in MPEP 503.

<u>New Applications Under 35 U.S.C. 111</u>
If a new application is being filed and the application includes the necessary components for a filing date (see 37 CFR 1.53(b)-(d) and MPEP 506), a Filing Receipt (37 CFR 1.54) will be issued in due course and the date shown on this Acknowledgement Receipt will establish the filing date of the application.

<u>National Stage of an International Application under 35 U.S.C. 371</u>
If a timely submission to enter the national stage of an international application is compliant with the conditions of 35 U.S.C. 371 and other applicable requirements a Form PCT/DO/EO/903 indicating acceptance of the application as a national stage submission under 35 U.S.C. 371 will be issued in addition to the Filing Receipt, in due course.

<u>New International Application Filed with the USPTO as a Receiving Office</u>
If a new international application is being filed and the international application includes the necessary components for an international filing date (see PCT Article 11 and MPEP 1810), a Notification of the International Application Number and of the International Filing Date (Form PCT/RO/105) will be issued in due course, subject to prescriptions concerning national security, and the date shown on this Acknowledgement Receipt will establish the international filing date of the application.

R É P U B L I Q U E F R A N Ç A I S E

INSTITUT NATIONAL
DE LA PROPRIÉTÉ
INDUSTRIELLE

Brevet d'invention

Certificat d'utilité

COPIE OFFICIELLE

Le Directeur général de l'Institut national de la propriété industrielle certifie que le document ci-annexé est la copie certifiée conforme d'une demande de titre de propriété industrielle déposée à l'Institut.

Fait à Paris, le 07 DEC. 2009

Pour le Directeur général de l'Institut
national de la propriété industrielle
Le Chef du Département des brevets

Martine PLANCHE

DB 267/02/07

Siège : 26*bis*, rue de Saint-Pétersbourg - 75800 PARIS Cedex 08 - Téléphone : 0 820 213 213 - Télécopie : 33 (0)1 53 04 45 23 - www.inpi.fr - contact@inpi.fr
Établissement public national créé par la loi n°51-444 du 19 avril 1951

INPI

26 bis, rue de Saint Pétersbourg - 75800 Paris Cedex 08

Pour vous informer : INPI DIRECT
N° Indigo 0 825 83 85 87

Télécopie : 33 (01) 53 04 52 65

BREVET D'INVENTION
CERTIFICAT D'UTILITÉ

Code de la propriété intellectuelle - Livre VI

cerfa N° 11354*05

REQUÊTE EN DÉLIVRANCE
page 1/2

BR1

Cet imprimé est à remplir lisiblement à l'encre noire DB 540 SW/010905

Réservé à l'INPI

REMISE DES PIÈCES
DATE 30/12/2008
LIEU 75 INPI - Paris SP26bis
N° D'ENREGISTREMENT NATIONAL ATTRIBUÉ PAR L'INPI 08/07500
DATE DE DÉPÔT ATTRIBUÉE PAR L'INPI 30 DEC. 2008

1 NOM ET ADRESSE DU DEMANDEUR OU DU MANDATAIRE À QUI LA CORRESPONDANCE DOIT ÊTRE ADRESSÉE

CABINET DEBAY
126, ELYSEE 2
78170 LA CELLE SAINT CLOUD

Vos références pour ce dossier *(facultatif)* MGI/05/FR/mcd

Confirmation d'un dépôt par télécopie ☐ N° attribué par l'INPI à la télécopie

2 NATURE DE LA DEMANDE — **Cochez l'une des 4 cases suivantes**

Demande de brevet	☒	
Demande de certificat d'utilité	☐	
Demande divisionnaire	☐	
Demande de brevet initiale	N°	Date
ou demande de certificat d'utilité initiale	N°	Date
Transformation d'une demande de brevet européen *Demande de brevet initiale*	☐ N°	Date

3 TITRE DE L'INVENTION (200 caractères ou espaces maximum)

Dispositif d'impression par jet d'encre d'une composition de vernis pour substrat imprimé

4 DÉCLARATION DE PRIORITÉ OU REQUÊTE DU BÉNÉFICE DE LA DATE DE DÉPÔT D'UNE DEMANDE ANTÉRIEURE FRANÇAISE

Pays ou organisation
Date N°
Pays ou organisation
Date N°
Pays ou organisation
Date N°

☐ **S'il y a d'autres priorités, cochez la case et utilisez l'imprimé «Suite»**

5 DEMANDEUR (Cochez l'une des 2 cases) ☒ **Personne morale** ☐ **Personne physique**

Nom ou dénomination sociale		MGI FRANCE
Prénoms		
Forme juridique		SA
N° SIREN		3 2 4 3 5 7 1 5 1
Code APE-NAF		2 9 5 L
Domicile ou siège	Rue	161 Avenue de Verdun
	Code postal et ville	9 4 2 0 0 IVRY SUR SEINE
	Pays	FRANCE
Nationalité		Française
N° de téléphone *(facultatif)*		N° de télécopie *(facultatif)*
Adresse électronique *(facultatif)*		

☐ **S'il y a plus d'un demandeur, cochez la case et utilisez l'imprimé «Suite»**

Remplir impérativement la 2ème page

INPI
INSTITUT NATIONAL DE LA PROPRIÉTÉ INDUSTRIELLE

BREVET D'INVENTION
CERTIFICAT D'UTILITÉ

REQUÊTE EN DÉLIVRANCE
page 2/2

BR2

Réservé à l'INPI

REMISE DES PIÈCES
DATE 30/12/2008
LIEU 75 INPI - Paris SP26bis
N° D'ENREGISTREMENT NATIONAL ATTRIBUÉ PAR L'INPI 08/07500

DB 540 W/010905

6 MANDATAIRE (s'il y a lieu)	
Nom	DEBAY
Prénom	Yves
Cabinet ou Société	CABINET DEBAY
Nationalité	Française
N° de pouvoir permanent et/ou de lien contractuel	
Adresse — Rue	126, ELYSEE 2
Adresse — Code postal et ville	7 8 1 7 0 LA CELLE SAINT CLOUD
Adresse — Pays	FRANCE
N° de téléphone (facultatif)	01.39.18.46.24
N° de télécopie (facultatif)	01.39.18.67.08
Adresse électronique (facultatif)	Cab.Debay@wanadoo.fr
7 INVENTEUR (S)	**Les inventeurs sont nécessairement des personnes physiques**
Les demandeurs et les inventeurs sont les mêmes personnes	☐ Oui ☒ Non : **Dans ce cas remplir le formulaire de Désignation d'inventeur(s)**
8 RAPPORT DE RECHERCHE	**Uniquement pour une demande de brevet (y compris division et transformation)**
Établissement immédiat ou établissement différé	☒ ☐ **Choix à faire obligatoirement au dépôt (cf. Notice explicative Rubrique 8)**
9 RÉDUCTION DU TAUX DES REDEVANCES (cf. Notice explicative Rubrique 9)	☐ Personne(s) physique(s) ☒ PME ☐ Organisme à but non lucratif dans le domaine de l'enseignement ou de la recherche
10 SÉQUENCES DE NUCLEOTIDES ET/OU D'ACIDES AMINÉS	☐ Cochez la case si la description contient une liste de séquences
Le support électronique de données est joint	☐
La déclaration de conformité de la liste de séquences sur support papier avec le support électronique de données est jointe	☐
Si vous avez utilisé l'imprimé «Suite», indiquez le nombre de pages jointes	

11 SIGNATURE DU DEMANDEUR OU DU MANDATAIRE (Nom et qualité du signataire) Y. DEBAY Mandataire (CPI 92-1066)	**VISA DE LA PRÉFECTURE OU DE L'INPI**

Conformément aux dispositions de la loi n° 78-17 du 6.01.1978 relative à l'informatique, aux fichiers et aux libertés, vous bénéficiez d'un droit d'accès et de rectification pour les informations vous concernant auprès de l'INPI. Les données à caractère personnel que vous êtes tenu de nous fournir dans ce formulaire sont nécessaires pour assurer le traitement de votre demande.

INPI
INSTITUT NATIONAL DE LA PROPRIÉTÉ INDUSTRIELLE

26 bis, rue de Saint Pétersbourg - 75800 Paris Cedex 08

Pour vous informer : INPI DIRECT
N° Indigo 0 825 83 85 87
0,15 € TTC mn

Télécopie : 33 (0)1 53 04 52 65

BREVET D'INVENTION
CERTIFICAT D'UTILITÉ

Code de la propriété intellectuelle - Livre VI

cerfa N° 11235*03

DÉSIGNATION D'INVENTEUR(S) Page N° 1 / 1

INV

(À fournir dans le cas où les demandeurs et les inventeurs ne sont pas les mêmes personnes)

Cet imprimé est à remplir lisiblement à l'encre noire

DB 113 A W 300305

Vos références pour ce dossier (facultatif)	MGI/05/FR/mcd
N° D'ENREGISTREMENT NATIONAL	08/07500

TITRE DE L'INVENTION (200 caractères ou espaces maximum)

Dispositif d'impression par jet d'encre d'une composition de vernis pour substrat imprimé

LE(S) DEMANDEUR(S) :

MGI SA
161 Avenue de Verdun
94200 IVRY SUR SEINE

DESIGNE(NT) EN TANT QU'INVENTEUR(S) :

1 Nom		ABERGEL
Prénoms		Edmond
Adresse	Rue	86 Cours de Vincennes
	Code postal et ville	7 5 0 1 2 PARIS
Société d'appartenance (facultatif)		
2 Nom		
Prénoms		
Adresse	Rue	
	Code postal et ville	
Société d'appartenance (facultatif)		
3 Nom		
Prénoms		
Adresse	Rue	
	Code postal et ville	
Société d'appartenance (facultatif)		

S'il y a plus de trois inventeurs, utilisez plusieurs formulaires. Indiquez en haut à droite le N° de la page suivi du nombre de pages.

DATE ET SIGNATURE(S)
DU (DES) DEMANDEUR(S)
OU DU MANDATAIRE
(Nom et qualité du signataire)

Y. DEBAY Mandataire (CPI 92-1066)
Le 05/01/2009

Conformément aux dispositions de la loi n° 78-17 du 6 janvier 1978 relative à l'informatique, aux fichiers et aux libertés, vous bénéficiez d'un droit d'accès et de rectification pour les données vous concernant auprès de l'INPI. Les données à caractère personnel que vous êtes tenu(e) de nous fournir dans ce formulaire sont exclusivement utilisées pour identifier le titulaire de la demande et son éventuel mandataire.

Dispositif d'impression par jet d'encre d'une composition de vernis pour substrat imprimé.

La présente invention se rapporte au domaine des machines d'impression par jet d'encre sans contact physique avec un substrat destiné à être recouvert d'une vernis, et plus particulièrement au domaine des dispositif d'impression par une technique piézo-électrique adaptée en fonction du vernis d'impression utilisé.

Au cours d'une impression, une encre est déposée sur la surface d'un substrat, ce substrat pouvant être, par exemple, du papier ou du plastique. Il est alors courant de recouvrir la surface imprimée de ce substrat par une couche de protection. Cette couche de protection complète la fixation de l'image imprimée sur le substrat tout en garantissant la résistance de l'impression contre certaines agressions extérieures comme par exemple des projections, voire la lumière, la chaleur ou l'humidité ou permet de créer des effets visuels différents en imprimant des motifs en vernis dans certaines zones. Le dépôt de cette couche de protection sur le substrat imprimé est généralement effectué en faisant intervenir une impression par Flexographie Offset, Sérigraphie. Le vernis permet aussi de personnaliser le document en faisant apparaître des zones avec des motifs en vernis et d'autres zones sans vernis.

La demande de brevet EP174960 se rapporte à une machine numérique à jet d'encre pour la pose d'un revêtement avec une viscosité moyenne sur un substrat de revêtement variable grâce à buses formées par des aiguilles creuses mises en vibration par un actionneur piézo-électrique collé sur un résonateur formé par le montage de l'aiguille creuse. La dimension et la forme de la goutte de matière qui se trouve alors déposée sur la surface du substrat est fonction de la durée et de la puissance de l'excitation de l'actionneur. Toutefois un tel dispositif, s'il permet le dépôt de gouttes de vernis avec des viscosités moyennes ou élevées qui sont de

l'ordre du millier de centipoises, n'est pas adapté pour assurer une éjection optimale d'un vernis avec une viscosité beaucoup plus faible.

La présente invention a pour objectif de palier un ou plusieurs inconvénients de l'art antérieur en fournissant dispositif adapté pour un dépôt optimisé d'une encre de couverture sur la surface d'un substrat indépendamment de sa viscosité et du substrat recouvert.

Cet objectif est atteint grâce à un dispositif d'impression à jet d'encre pour la pose d'un vernis formant un revêtement sur une surface d'un substrat comprenant au moins :

- un magasin d'entrée,
- un magasin de sortie,
- un moyen informatique de gestion des opérations sur chacun des postes de travail,
- un moyen de déplacement du substrat entre les différents postes de travail,
- un moyen de préhension et de transfert du substrat depuis le magasin d'entrée vers le moyen de déplacement et depuis le moyen de déplacement vers le magasin de sortie,
- une pluralité de buses logées dans un module formant une tête d'impression, au moins une des buses étant alimentée par un réservoir contenant du vernis à projeter sur le substrat, chacune des buses étant mise en vibration par un actionneur piézo-électrique de sorte que l'excitation de l'actionneur en durée et en puissance détermine la dimension et la forme de la goutte de vernis,
- un poste de pose pour effectuer la pose du produit dans une zone déterminé du substrat,

caractérisé en ce que l'actionneur piézo-électrique d'au moins une buse est connecté à un dispositif de commande et de régulation de la forme de l'onde voltaïque d'expulsion de la goutte de vernis de la buse en fonction de la viscosité et/ou de la composition du vernis à déposer.

Selon une variante de réalisation de l'invention, le dispositif d'impression à jet d'encre pour la pose d'un vernis est caractérisé en ce que la forme de l'onde voltaïque d'expulsion comprend :

- un signal de tension correspondant à l'état d'une buse de vernis au repos,
- un front montant du voltage jusqu'à un plateau formant la phase d'éjection,
- une inversion de polarité de la tension jusqu'à un plateau de durée correspondant à la durée de rechargement de la buse en vernis,
- un front descendant qui assure le retour du signal voltaïque à son niveau de repos.

Selon une particularité de cette variante de réalisation, le dispositif d'impression à jet d'encre pour la pose d'un vernis est caractérisé en ce que la durée du plateau du rechargement de la buse en vernis est égale à celle du plateau correspondant à la phase d'éjection du vernis.

Selon une particularité de cette variante de réalisation, le dispositif d'impression à jet d'encre pour la pose d'un vernis est caractérisé en ce que le front montant comprend au moins un plateau positionné à une valeur intermédiaire entre la valeur du signal voltaïque de repos et la valeur du signal au niveau du plateau d'éjection, ce plateau avec une valeur intermédiaire correspondant à la préparation de l'éjection.

Selon une autre particularité de cette variante de réalisation, le dispositif d'impression à jet d'encre pour la pose d'un vernis est caractérisé en ce que le front montant présente une progression croissante et continue.

Selon une autre particularité de cette variante de réalisation, le dispositif d'impression à jet d'encre pour la pose d'un vernis est caractérisé en ce que la valeur et/ou la durée d'au moins un plateau et/ou la forme de l'onde voltaïque est prédéfinie et mise en corrélation avec au moins un type de vernis identifié dans au moins un moyen de mémorisation connecté au dispositif de contrôle et de régulation de la forme de l'onde voltaïque

d'expulsion de la goutte de vernis de la buse, permettant la sélection des informations correspondant au type de vernis.

Selon une autre variante de réalisation de l'invention, le dispositif d'impression à jet d'encre pour la pose d'un vernis est caractérisé en ce qu'au moins une buse du dispositif intègre une résistance chauffante connectée à un dispositif de contrôle de la viscosité de la goutte de vernis dans la buse, le dispositif de contrôle intégrant un moyen de commande et de régulation de la température de la goutte de vernis dans la buse.

Selon une particularité de cette variante de réalisation, le dispositif d'impression à jet d'encre pour la pose d'un vernis est caractérisé en ce que le dispositif de contrôle de la viscosité de la goutte est connecté à un moyen de mémoire intégrant au moins une base de donnée corrélant au moins une température prédéfinie de la résistance à une viscosité du vernis d'un type donné utilisé en sortie de buse en fonction de la composition du vernis à déposer.

Selon une autre variante de réalisation de l'invention, le dispositif d'impression à jet d'encre pour la pose d'un vernis est caractérisé en ce que la buse comprend une sonde de mesure de la viscosité du vernis en amont de l'actionneur piézo-électrique et/ou de la résistance chauffante.

Selon une autre variante de réalisation de l'invention, le dispositif d'impression à jet d'encre pour la pose d'un vernis est caractérisé en ce que le dispositif d'impression à jet d'encre est associé à un moyen de programmation du dispositif de commande et de régulation de la forme de l'onde voltaïque d'expulsion de la goutte et/ou du dispositif de contrôle de la viscosité de la goutte de vernis dans la buse.

Selon une autre variante de réalisation de l'invention, le dispositif d'impression à jet d'encre pour la pose d'un vernis est caractérisé en ce que le dispositif d'impression comprend au moins une lampe à U.V. en aval du poste de dépôt du vernis qui présente une émission dans une longueur

d'onde adaptée à l'activation d'au moins un photo-initiateur de la composition du vernis spécifique du support du substrat imprimé.

Selon une autre variante de réalisation de l'invention, le dispositif d'impression à jet d'encre pour la pose d'un vernis est caractérisé en ce que le dispositif d'impression comprend au moins une lampe à Infrarouge positionnée en face du substrat et arrangée en amont de la lampe à U.V. pour pré-sécher et tendre le vernis déposé sur le substrat, le positionnement étant défini selon une distance optimale en fonction du substrat sur lequel le vernis est déposé et/ou de la composition du vernis déposé.

Selon une particularité de cette variante de réalisation, le dispositif d'impression à jet d'encre pour la pose d'un vernis est caractérisé en ce qu'au moins une longueur d'onde de la lampe à Infrarouge est adaptée pour fournir un pré-séchage et une tension de vernis optimale en fonction du substrat sur lequel le vernis est déposé et/ou de la composition du vernis déposé.

Selon une particularité de cette variante de réalisation, le dispositif d'impression à jet d'encre pour la pose d'un vernis est caractérisé en ce que le dispositif d'impression comprenant au moins deux lampes Infrarouge émettant dans des intervalles de longueurs d'onde différentes, la puissance respective de chacune des lampes est commandée et contrôlée par un dispositif gérant une combinaison des rayonnement des lampes Infrarouge adaptée à l'obtention d'un pré-séchage en fonction du substrat sur lequel le vernis est déposé et/ou de la composition du vernis déposé.

Selon une particularité de cette variante de réalisation, le dispositif d'impression à jet d'encre pour la pose d'un vernis est caractérisé en ce que le dispositif comprend un moyen de déplacement du substrat en face et à une distance déterminée d'au moins une lampe à Infrarouge selon une vitesse contrôlée et adaptée au type de substrat sur lequel le vernis est déposé et/ou de la composition du vernis déposé.

Selon une autre variante de réalisation de l'invention, le dispositif d'impression à jet d'encre pour la pose d'un vernis est caractérisé en ce que le dispositif comprend un système de correction d'au moins une déviation latérale de l'impression par le dispositif.

L'invention, avec ses caractéristiques et avantages, ressortira plus clairement à la lecture de la description faite en référence aux dessins annexés dans lesquels :

- la figure 1 représente un schéma général d'une onde voltaïque d'expulsion d'encre de recouvrement générée par l'actionneur piézo-électrique d'au moins une buse d'un dispositif d'impression de l'invention,
- la figure 2 un exemple de dispositif de projection intégrant les dispositifs de contrôle et de régulation de l'invention.

Il convient avant tout de considérer que dans le présent document, les termes « encre de recouvrement », « produit visqueux » et « vernis » doivent être compris comme des synonymes.

La présente invention porte sur un dispositif d'impression destiné notamment au dépôt de vernis sur la surface d'un substrat indépendamment de la viscosité de ce vernis.

Le dispositif d'impression est contrôlée par un ordinateur de contrôle qui commande les différents postes de travail et également qui collecte les informations de différents capteurs. Ces capteurs fournissent par exemple, des informations de position des substrats, des informations de configuration des substrats ou des informations de validation suite à une opération correctement effectuée ou non. Les substrats en attente d'impression sont placés dans un magasin d'entrée ayant une capacité définie en fonction de la nature du substrat et des besoins pour l'impression. Dans un exemple de réalisation, le magasin d'entrée est prévu pour accepter plusieurs milliers de substrats de nature, d'épaisseur jusqu'à 800µm et de dimensions variables, par exemple entre un format de type carte de crédit jusqu'à un format de type

A0, et éventuellement dont au moins une face est en plastique. Une fois le processus de pose terminé, les substrats sont stockés dans un magasin de sortie ayant généralement la même capacité que le magasin d'entrée. Un dispositif de préhension des substrats permet de sortir les substrats du magasin d'entrée et de les disposer sur un convoyeur pour les déplacer le long d'une chaîne de travail comportant plusieurs postes de travail. Le premier poste de travail de la chaîne est un margeur avec indexage du substrat qui permet la mise en position par rapport à deux bords de référence ou la détection d'un repère imprimé sur le substrat. Un capteur va détecter les informations de positions et les transmettre à l'ordinateur par un réseau câblé ou sans fils. Ces informations stockées en mémoire dans l'ordinateur seront ensuite réutilisées à d'autres postes de travail, pilotés par l'ordinateur. Des contrôles sont également effectués afin de détecter la présence d'un substrat unique à chaque poste du convoyeur.

Le second poste de travail est le dispositif de projection du produit à appliquer sur le support ou substrat. Ce dispositif de projection comporte un réservoir (7) qui contient le produit visqueux à projeter. Des exemples non limitatifs de produits contenus dans le réservoir sont du vernis, de l'encre grattable, de l'encre conductrice, de l'encre d'impression ou de la colle avec des viscosités moyennes qui peuvent être de l'ordre de 100 voire 1000 centipoises, mais également des viscosités de l'ordre d'une dizaine de centipoises. L'alimentation du réservoir peut être effectuée, par exemple, manuellement ou automatiquement par un circuit d'alimentation ou encore de façon semi-automatique par un dispositif piloté par un opérateur. Le réservoir (7) est relié à un dispositif de mise en pression. Le système de projection nécessite en effet une pression déterminée pour avoir un bon fonctionnement. Le dispositif (8) de mise en pression comporte donc un moyen de contrôle et de régulation de la pression du produit envoyé vers les buses, de manière non limitative commandé par l'ordinateur. Les buses alimentées directement par le dispositif (8) de mise en pression, sont toutes pilotées, individuellement ou collectivement, par un dispositif (9) de pilotage

des buses, de manière non limitative commandées par l'ordinateur. Les buses sont alignées et montées dans une rampe, formant ainsi une rampe de buses (12). Chaque buse est constituée par une structure creuse qui est mise en vibration par un actionneur piézo-électrique collé sur le résonateur formé par le montage de la buse en rampe. Le pilotage de chaque buse est un procédé piézo-électrique, c'est-à-dire que le produit est projeté par une vibration contrôlée par une excitation électrique. Les buses espacées de un dixième à plusieurs centièmes de millimètres, préférentiellement entre 0,01 mm et 0,1mm, permettent ainsi de couvrir une surface précise.

La zone de pose est définie pour chaque substrat par un fichier de paramétrage contenu dans une zone mémoire de l'ordinateur, concernant la forme de la zone, sa position sur le substrat par rapport aux repères du substrat, la quantité de produit à projeter, un logiciel de commande de la machine exploitant ces informations pour les traduire en paramètres de déplacement relatif du substrat et des buses, de commande sélective des buses et de réitération de passage décalé du substrat devant les buses pour produire si nécessaire de lignes jointives.

Le poste qui succède à la machine de projection est le four de séchage. Ce four permet de sécher complètement ou partiellement le produit projeté. Le séchage, en fonction du produit appliqué, peut être réalisé par un rayonnement Infrarouge dans le cas d'un vernis aqueux ou par un courant d'air chauffé pour une colle ou une encre grattable ou par UV en fonction du produit projeté. Le séchage permet ensuite au substrat d'être stocké dans le magasin de sortie, sans que le produit projeté ne se transfère sur d'autres substrats ou sur le magasin avec lesquels le substrat est en contact.

La pose d'une couche de vernis est réalisée sur une face du substrat avant ou après une impression. Une couche de vernis occupe par exemple une zone sur le substrat quasiment rectangulaire, dont les coins sont arrondis. De manière non limitative, une marge non recouverte de produit projeté est laissée sur le pourtour de la face du substrat. Sur une zone d'un substrat une couche de colle ré-activable thermiquement est réalisée, selon

un motif, par exemple de petit rectangle arrondi en ses coins. Des motifs différents d'encre grattable sont posés sur d'autres zones, comme par exemple une flèche, une étoile ou tout autre motif comportant, de manière non limitative, un contour formé d'angles et de lignes droites et/ou de courbes.

En disposant deux machines, l'une avant l'impression, l'autre après l'impression et en chargeant les réservoirs de ces machines avec les produits visqueux appropriés différentes impressions sont réalisées, de manière non limitative, sur deux faces d'un substrat. Ces impressions sont, par exemple, des zones imprimées et protégées par un vernis, des zones imprimées et recouvertes d'une encre grattable ou des zones encollées ou encore une combinaison de ces différentes possibilités sur n'importe quelle face. L'impression sur les différentes faces est réalisée par un mécanisme de retournement entre une machine et la machine suivante ou précédente.

La commande piézo-électrique permet de régler la projection de matière en durée et en puissance. Les zones de pose sont alors définies par ce procédé numérique avec une précision de l'ordre de 0,05 mm. La machine peut donc poser un point ou encore de recouvrir toute la surface d'un substrat. La zone de pose est définie pour chaque substrat par un fichier de paramétrage concernant la forme de la zone, sa position sur le substrat par rapport aux repères du substrat, la quantité de produit à projeter. Un logiciel de commande de la machine exploite ces informations pour les traduire en paramètres de déplacement relatif du substrat et des buses, en paramètres de commande sélective des buses et en paramètres de réitération de passage décalé du substrat devant les buses pour produire si nécessaire des lignes jointives.

Dans d'autres exemples de réalisation, la chaîne de travail peut comporter d'autres postes de travail additionnels qui permettent par exemple l'assemblage de différentes pièces entre elles, dans le cas d'une application de colle sur des zones de contact déterminées.

Le pilotage électro-acoustique de chacune des buses (12) fait intervenir un actionneur piézo-électrique activé par un voltage particulier. Ce pilotage est contrôlé par un dispositif de commande et de régulation de la forme de l'onde voltaïque de sorte que la forme de l'onde voltaïque qui assure l'expulsion du vernis et son dépôt sur le substrat présente un front montant (2) depuis une valeur de tension correspondant à l'état d'une buse de vernis au repos (1) jusqu'à une valeur qui forme un plateau de phase (3), ce plateau (3) définissant ainsi la phase d'éjection du vernis chargé dans la buse. L'intensité de l'actionneur évolue alors en proportion avec le voltage de l'onde. Le signal voltaïque présente ensuite une inversion de polarité (4) de la tension jusqu'à une valeur définissant un plateau (5) de durée qui, lui, correspond à la durée de rechargement de la buse en vernis. Selon un mode de réalisation préféré, la durée du plateau qui correspond au rechargement du vernis dans la buse est égale à celle du plateau correspondant à l'éjection du vernis de la buse. L'onde de ce signal se termine par un front descendant (6) au cours duquel le retour du signal voltaïque à la valeur du signal au repos (1). La durée du plateau de préparation de l'éjection est comprise entre 10 et 200 µs au cours du front montant du signal.

Selon un mode de réalisation particulier, la forme de l'onde voltaïque montre un front montant qui présente une valeur intermédiaire située entre la valeur du signal voltaïque au repos et la valeur du signal au niveau du plateau de phase de l'expulsion du vernis. Le plateau de cette valeur intermédiaire correspond à une étape de préparation de l'éjection du vernis avant l'expulsion proprement dite. Selon un mode de réalisation particulier, la valeur de la durée du plateau intermédiaire, au cours du front montant du signal, est environ égale à la moitié de la valeur de la durée du plateau de préparation. La valeur de ce plateau est notamment définit en fonction de la viscosité du vernis. Il permet ainsi une recharge du vernis dans la buse en effectuant des pauses lors de la charge pour éviter une montée d'air dans la buse depuis son orifice d'expulsion. Selon un mode de réalisation préférentiel, le front montant peut présenter plusieurs plateaux intermédiaires

pour la charge de vernis. Le nombre et la valeur de chacun de ces plateaux est alors fonction de la viscosité du vernis. Selon un mode de réalisation particulier, cette succession de plateaux de durée respective réduite conduit à la formation d'un chargement croissant, continu et progressif du vernis dans la buse, qui peut avoir l'aspect d'une courbe ou d'une droite. Idéalement, le vernis utilisé présente une viscosité de 4 à 100 mPa.s.

La figure 1 présente un exemple de forme d'onde d'un signal voltaïque dans ses aspects les plus généraux.

Le dispositif (10) de commande et de régulation permet un contrôle et un ajustement des valeurs et des durées des différents plateaux de l'onde voltaïque et donc de la forme de l'onde en fonction d'au moins une caractéristique du vernis destiné à être déposé sur la surface du substrat, notamment de la viscosité de ce vernis, voire même du type de substrat destiné à être recouvert. Selon un mode de réalisation particulier, le dispositif (10) de commande et de régulation est en connexion avec un moyen de mémorisation qui intègre une ou plusieurs bases de données comprenant des formes d'onde et/ou des valeurs voltaïques et des durées particulières pour des plateaux de phase de l'onde voltaïque, les données enregistrées dans ce moyen de mémorisation étant corrélées avec au moins une caractéristique, principalement la viscosité voire la composition, du vernis utilisé ou du substrat destiné à être recouvert.

Selon une variante de réalisation, chacune des buses du dispositif intègre une résistance (13) chauffante qui, connecté à un dispositif (10) de contrôle de la viscosité de la goutte du vernis dans la buse, permet de commander et de réguler la température du vernis et donc d'effectuer un contrôle avec précision de sa viscosité. La résistance (13) chauffante est logée dans la buse (12) en amont de l'orifice d'éjection de la buse. Selon un mode de réalisation particulier, ce dispositif (10) de contrôle est également connecté avec un moyen de mémorisation qui intègre une ou plusieurs bases de données comprenant notamment au moins une valeur de température prédéfinie de la résistance (13) pour l'obtention d'une valeur de

viscosité particulière du vernis en sortie de buse. Cette valeur de température est établie en fonction de la composition du vernis à déposer qui est préenregistrée dans le moyen de mémorisation. Cette corrélation entre une valeur de température nécessaire à la résistance et la composition d'un vernis peut être obtenue, par exemple, par l'intermédiaire d'un calculateur intégrant une fonction mathématique reliant la viscosité du vernis de composition déterminée à une valeur de température. Cette température dans les buses est comprise entre 10 et 50°Celsius.

Le ou les dispositifs (10) de commande et de régulation peuvent être préprogrammé par un utilisateur au niveau d'une interface adaptée par laquelle l'utilisateur définit le vernis et/ou le substrat utilisé, ou bien par une sonde (11) ou des capteurs qui effectuent des mesures permettant une détection d'un ou de plusieurs paramètres nécessaires à la sélection de la forme ou d'une caractéristique du signal de l'onde voltaïque, ou bien encore de la détermination de la température nécessaire à la résistance pour que le vernis présente une viscosité située dans un intervalle défini, voire atteigne une valeur particulière. La sonde (11) et/ou les capteurs se trouvent ainsi préférentiellement positionnés en amont de la résistance chauffante et de l'actionneur piézo-électrique par rapport au sens de déplacement du vernis dans les buses d'impression.

Selon un mode de réalisation particulier, le dispositif d'impression de l'invention est adapté aux vernis qui intègrent dans leur composition au moins un photo-initiateur pour l'activation de la polymérisation du vernis. Ce photo-initiateur est généralement activé grâce à un rayonnement selon une ou plusieurs longueurs d'onde particulières qui forment un ou plusieurs radicaux libres. Selon un mode de réalisation général, les longueurs d'onde utilisée correspondent à celles d'un rayonnement à ultra-violet (U.V.). L'adaptation du dispositif fait donc intervenir le positionnement d'une ou de plusieurs lampes à U.V. en aval des buses d'impression par rapport au sens de déplacement du substrat dans le dispositif.

Préférentiellement, les longueurs d'onde utilisées sont de l'ordre de 200 à 400 nm. Cette sélection de la longueur d'onde est fonction du type de photo-initiateurs intégrés dans la composition du vernis déposé sur le substrat.

Selon un mode de réalisation particulier, le dispositif d'impression de l'invention comprend un poste de séchage avec une ou plusieurs lampes à rayonnement Infrarouge (I.R.) qui effectuent un pré-séchage du vernis déposé. Le positionnement de ces lampes à I.R. par rapport au substrat et la vitesse de déplacement du substrat en face de ces lampes sont déterminés selon une distance optimale prédéfinie en fonction d'au moins une caractéristique du vernis déposée et du type de substrat recouvert. Ces paramètres de pré-séchage sont prédéfinis dans un moyen de mémorisation en relation avec un dispositif de contrôle et de régulation selon un mode de réalisation similaire à celui mentionné précédemment.

Selon un mode de réalisation particulier, les lampes à I.R. utilisées présentent des émissions dans des intervalles de longueurs d'onde différentes. La puissance de chacune des lampes est ainsi commandée et régulée par un dispositif adaptée pour la gestion de la combinaison des rayonnements des lampes. Le dispositif de gestion est, là également, associé à un moyen de mémorisation intégrant une programmation du rayonnement propre à chaque lampe en fonction du type de substrat recouvert et/ou d'au moins une caractéristique du vernis déposée. Selon un mode de réalisation particulier, les lampes du poste de séchage rayonnent avec des longueurs d'onde comprises entre 0,5 et 8 µm.

Dans le cas d'une utilisation d'une paire de longueurs d'onde, longueurs d'onde courtes comprises entre 0,5 et 3,2 µm et longueurs d'onde moyennes comprises entre 1,6 et 8 µm, la combinaison des longueurs d'onde pour un substrat de type papier imprimé s'appuie sur une puissance de l'ordre de 100% pour les longueurs d'onde moyennes et une puissance de l'ordre de 50% pour les longueurs d'onde courtes. De même, la combinaison des longueurs d'onde pour un substrat de type plastique

s'appuie sur une puissance de l'ordre de 80% pour les longueurs d'onde moyennes et une puissance très faible, voire nulle pour les longueurs d'onde courtes.

Selon un mode de réalisation particulier, le dispositif intègre un système de vérification de traçage des zones destinée à être imprimées. Ce système s'appuie sur un poste de lecture qui lit et détermine la position des zones à recouvrir, est mû par des procédés électromécaniques afin que un guide de rectification puisse suivre une ligne de rectification et assurer un parfait repérage entre le support imprimé et la nouvelle zone imprimée. Cette ligne de rectification est une ligne à fort contraste, idéalement noire, imprimée avec le motif d'impression du substrat, dit impression de fond. Le poste de lecture prend alors cette ligne de rectification comme référence pour permettre un calcul d'une déviation latérale par rapport au sens de déplacement du substrat par rapport aux buses qui déposent le vernis. A partir de la déviation mesurée, le guide de rectification opère une correction de la trajectoire en la modifiant en conséquence de sorte que la ligne de rectification demeure rigoureusement centrée avec le système de lecture.

Il doit être évident pour les personnes versées dans l'art que la présente invention permet des modes de réalisation sous de nombreuses autres formes spécifiques sans l'éloigner du domaine d'application de l'invention comme revendiqué. Par conséquent, les présents modes de réalisation doivent être considérés à titre d'illustration mais peuvent être modifiés dans le domaine défini par la portée des revendications jointes.

REVENDICATIONS

1. Dispositif d'impression à jet d'encre pour la pose d'un vernis formant un revêtement sur une surface d'un substrat comprenant au moins :

- un magasin d'entrée,
- un magasin de sortie,
- un moyen informatique de gestion des opérations sur chacun des postes de travail,
- un moyen de déplacement du substrat entre les différents postes de travail,
- un moyen de préhension et de transfert du substrat depuis le magasin d'entrée vers le moyen de déplacement et depuis le moyen de déplacement vers le magasin de sortie,
- une pluralité de buses (12) logées dans un module formant une tête d'impression, au moins une des buses étant alimentée par un réservoir (7) contenant du vernis à projeter sur le substrat, chacune des buses étant mise en vibration par un actionneur piézo-électrique de sorte que l'excitation de l'actionneur en durée et en puissance détermine la dimension et la forme de la goutte de vernis,
- un poste de pose pour effectuer la pose du produit dans une zone déterminé du substrat,

caractérisé en ce que l'actionneur piézo-électrique d'au moins une buse est connecté à un dispositif (10) de commande et de régulation de la forme de l'onde voltaïque d'expulsion de la goutte de vernis de la buse en fonction de la viscosité et/ou de la composition du vernis à déposer.

2. Dispositif d'impression à jet d'encre pour la pose d'un vernis selon la revendication 1, caractérisé en ce que la forme de l'onde voltaïque d'expulsion comprend :

- un signal (1) de tension correspondant à l'état d'une buse de vernis au repos,
- un front montant (2) du voltage jusqu'à un plateau (3) formant la phase d'éjection,

- une inversion de polarité (4) de la tension jusqu'à un plateau (5) de durée correspondant à la durée d'un rechargement de la buse en vernis,
- un front descendant (6) qui assure le retour du signal voltaïque à son niveau de repos.

3. Dispositif d'impression à jet d'encre pour la pose d'un vernis selon la revendication 2, caractérisé en ce que la durée du plateau du rechargement de la buse en vernis est égale à celle du plateau correspondant à la phase d'éjection du vernis.

4. Dispositif d'impression à jet d'encre pour la pose d'un vernis selon au moins une des revendications 2 ou 3, caractérisé en ce que le front montant comprend au moins un plateau positionné à une valeur intermédiaire entre la valeur du signal voltaïque de repos et la valeur du signal au niveau du plateau d'éjection, ce plateau avec une valeur intermédiaire correspondant à la préparation de l'éjection.

5. Dispositif d'impression à jet d'encre pour la pose d'un vernis selon au moins une des revendications 2 ou 3, caractérisé en ce que le front montant présente une progression croissante et continue.

6. Dispositif d'impression à jet d'encre pour la pose d'un vernis selon au moins une des revendications 2 ou 3 ou 4 ou 5, caractérisé en ce que la valeur et/ou la durée d'au moins un plateau et/ou la forme de l'onde voltaïque est prédéfinie et mise en corrélation avec au moins un type de vernis identifié dans au moins un moyen de mémorisation connecté au dispositif de contrôle et de régulation de la forme de l'onde voltaïque d'expulsion de la goutte de vernis de la buse, permettant la sélection des informations correspondant au type de vernis.

7. Dispositif d'impression à jet d'encre pour la pose d'un vernis selon une des revendications précédentes, caractérisé en ce qu'au moins une buse du dispositif intègre une résistance (13) chauffante connectée à un dispositif de contrôle de la viscosité de la goutte de vernis dans la buse, le dispositif de

contrôle (10) intégrant un moyen de commande et de régulation de la température de la goutte de vernis dans la buse.

8. Dispositif d'impression à jet d'encre pour la pose d'un vernis selon la revendication 7, caractérisé en ce que le dispositif de contrôle de la viscosité de la goutte est connecté à un moyen de mémoire intégrant au moins une base de donnée corrélant au moins une température prédéfinie de la résistance à une viscosité du vernis d'un type donné utilisé en sortie de buse en fonction de la composition du vernis à déposer.

9. Dispositif d'impression à jet d'encre pour la pose d'un vernis selon au moins une des revendications précédentes, caractérisé en ce que la buse comprend une sonde (11) de mesure de la viscosité du vernis en amont de l'actionneur piézo-électrique et/ou de la résistance chauffante.

10. Dispositif d'impression à jet d'encre pour la pose d'un vernis selon au moins une des revendications précédentes, caractérisé en ce que le dispositif d'impression à jet d'encre est associé à un moyen de programmation du dispositif de commande et de régulation de la forme de l'onde voltaïque d'expulsion de la goutte et/ou du dispositif de contrôle de la viscosité de la goutte de vernis dans la buse.

11. Dispositif d'impression à jet d'encre pour la pose d'un vernis selon au moins une des revendications précédentes, caractérisé en ce que le dispositif d'impression comprend au moins une lampe à U.V. en aval du poste de dépôt du vernis qui présente une émission dans une longueur d'onde adaptée à l'activation d'au moins un photo-initiateur de la composition du vernis spécifique du support du substrat imprimé.

12. Dispositif d'impression à jet d'encre pour la pose d'un vernis selon au moins une des revendications précédentes, caractérisé en ce que le dispositif d'impression comprend au moins une lampe à Infrarouge positionnée en face du substrat et arrangée en amont de la lampe U.V. pour pré-sécher le substrat, le positionnement étant défini selon une distance

optimale en fonction du substrat sur lequel le vernis est déposé et/ou de la composition du vernis déposé.

13. Dispositif d'impression à jet d'encre pour la pose d'un vernis selon la revendication 12, caractérisé en ce qu'au moins une longueur d'onde de la lampe à Infrarouge est adaptée pour fournir un pré-séchage optimal en fonction du substrat sur lequel le vernis est déposé et/ou de la composition du vernis déposé.

14. Dispositif d'impression à jet d'encre pour la pose d'un vernis selon une des revendications 12 ou 13, caractérisé en ce que le dispositif d'impression comprenant au moins deux lampes Infrarouge émettant dans des intervalles de longueurs d'onde différentes, la puissance respective de chacune des lampes est commandée et contrôlée par un dispositif gérant une combinaison des rayonnement des lampes Infrarouge adaptée à l'obtention d'un pré-séchage du vernis optimisé en fonction du substrat sur lequel le vernis est déposé et/ou de la composition du vernis déposé.

15. Dispositif d'impression à jet d'encre pour la pose d'un vernis selon une des revendications 12, 13 ou 14, caractérisé en ce que le dispositif comprend un moyen de déplacement du substrat en face et à une distance déterminée d'au moins une lampe à Infrarouge selon une vitesse contrôlée et adaptée au type de substrat sur lequel le vernis est déposé et/ou à la composition du vernis déposé

16. Dispositif d'impression à jet d'encre pour la pose d'un vernis selon une des revendications précédentes, caractérisé en ce que le dispositif comprend un système de correction d'au moins une déviation latérale de l'impression par le dispositif.

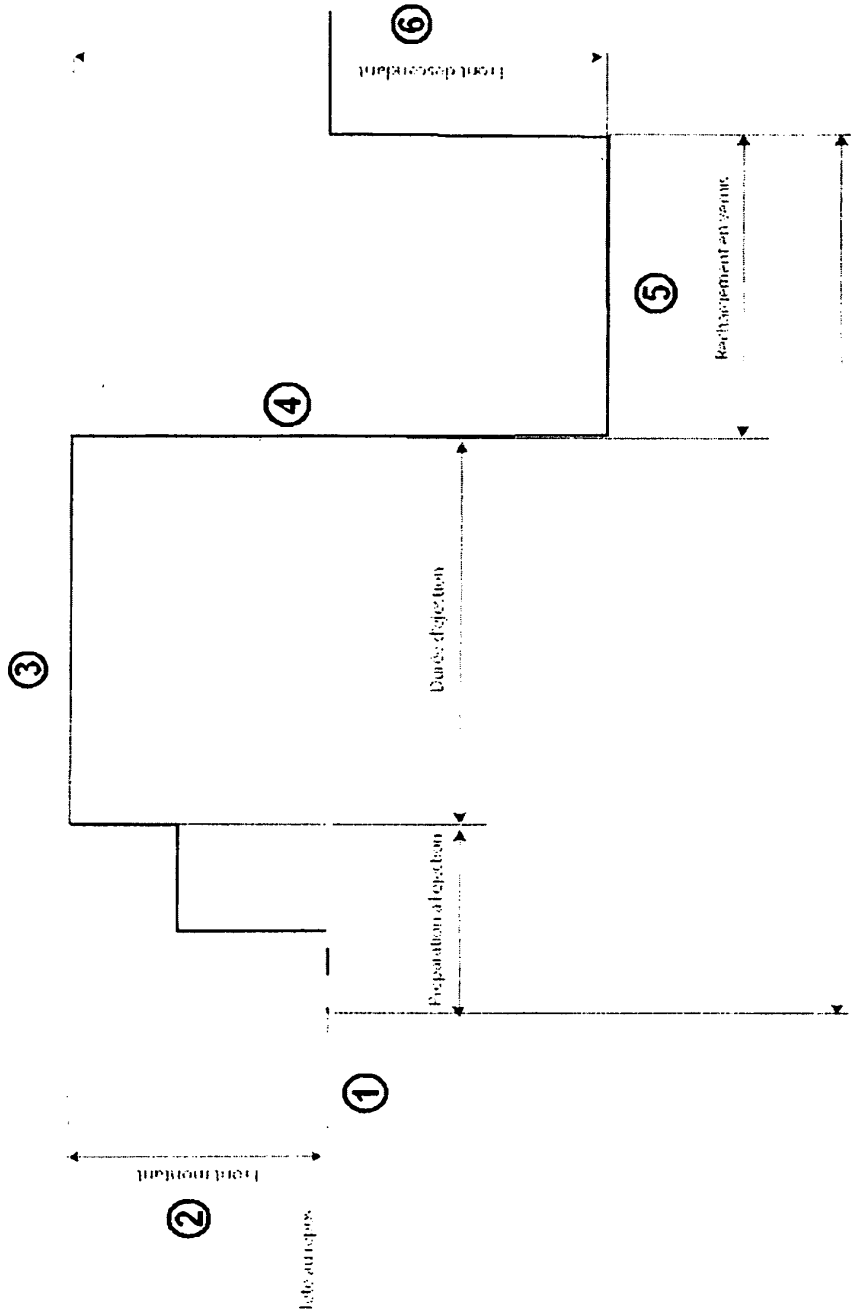
1
2
3
4
5
6
Front montant
Front descendant
Durée d'éjection
Préparation d'éjection
Rechargement en vernis

Figure 1

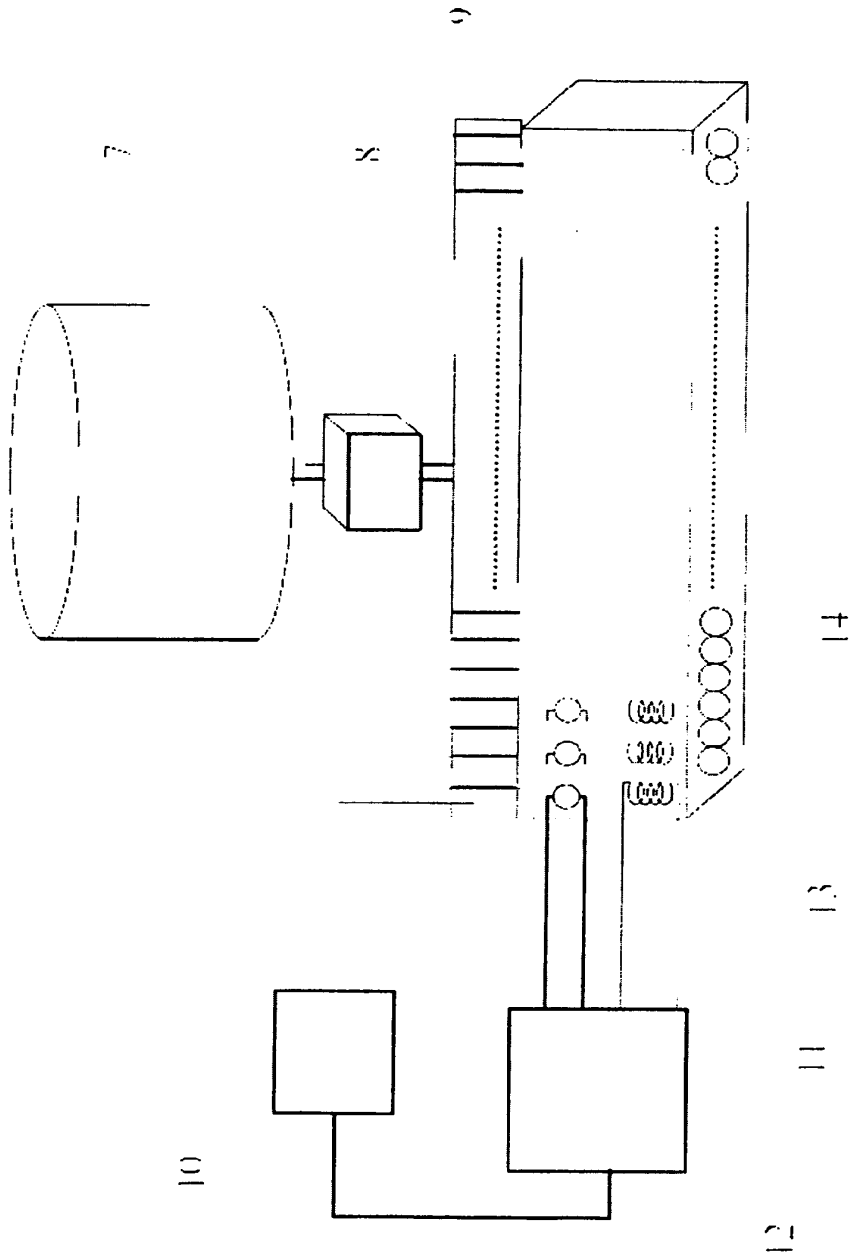

Figure 2

IFW

Docket No.: *1013-070* **PATENT**

OPAP IAP2 FEB 2 5 2010 PATENT & TRADEMARK OFFICE

IN THE UNITED STATES PATENT AND TRADEMARK OFFICE

In re Application of	:	
Edmond ABERGEL	:	
U.S. Patent Application No. 12/649,765	:	Group Art Unit: 2861
Filed: December 30, 2009	:	Examiner:

For: INK JET PRINTER AND METHOD FOR DEPOSITING A PROTECTIVE LAYER ON A SUBSTRATE

TRANSMITTAL OF CERTIFIED PRIORITY DOCUMENT

Commissioner for Patents
P.O. Box 1450
Alexandria, VA 22313-1450

Sir:

At the time the above application was filed, priority was claimed based on the following application(s):

FR Application No. 08 07500, filed December 30, 2008.

A copy of the priority application is enclosed. Acknowledgement is respectfully requested.

Respectfully submitted,

LOWE HAUPTMAN HAM & BERNER, LLP

Randy A. Noranbrock
Registration No. 42,940

1700 Diagonal Road, Suite 300
Alexandria, Virginia 22314
(703) 684-1111 AML/RAN/cjf
(703) 518-5499 Facsimile
Date: February 25, 2010

UNITED STATES PATENT AND TRADEMARK OFFICE

UNITED STATES DEPARTMENT OF COMMERCE
United States Patent and Trademark Office
Address: COMMISSIONER FOR PATENTS
P.O. Box 1450
Alexandria, Virginia 22313-1450
www.uspto.gov

APPLICATION NUMBER	FILING OR 371(C) DATE	FIRST NAMED APPLICANT	ATTY. DOCKET NO./TITLE
12/649,765	12/30/2009	Edmond ABERGEL	1013-070

CONFIRMATION NO. 6124

22429
LOWE HAUPTMAN HAM & BERNER, LLP
1700 DIAGONAL ROAD
SUITE 300
ALEXANDRIA, VA 22314

FORMALITIES LETTER

OC000000039690297

Date Mailed: 01/19/2010

NOTICE TO FILE MISSING PARTS OF NONPROVISIONAL APPLICATION

FILED UNDER 37 CFR 1.53(b)

Filing Date Granted

Items Required To Avoid Abandonment:

An application number and filing date have been accorded to this application. The item(s) indicated below, however, are missing. Applicant is given **TWO MONTHS** from the date of this Notice within which to file all required items and pay any fees required below to avoid abandonment. Extensions of time may be obtained by filing a petition accompanied by the extension fee under the provisions of 37 CFR 1.136(a).

- The oath or declaration is missing.
  A properly signed oath or declaration in compliance with 37 CFR 1.63, identifying the application by the above Application Number and Filing Date, is required.
  Note: If a petition under 37 CFR 1.47 is being filed, an oath or declaration in compliance with 37 CFR 1.63 signed by all available joint inventors, or if no inventor is available by a party with sufficient proprietary interest, is required.

The application is informal since it does not comply with the regulations for the reason(s) indicated below.

The required item(s) identified below must be timely submitted to avoid abandonment:

- Replacement drawings in compliance with 37 CFR 1.84 and 37 CFR 1.121(d) are required. The drawings submitted are not acceptable because:
  - The drawings must be reasonably free from erasures and must be free from alterations, overwriting, interlineations, folds, and copy marks. See Figure(s) All .

Applicant is cautioned that correction of the above items may cause the specification and drawings page count to exceed 100 pages. If the specification and drawings exceed 100 pages, applicant will need to submit the required application size fee.

The applicant needs to satisfy supplemental fees problems indicated below.

The required item(s) identified below must be timely submitted to avoid abandonment:

- To avoid abandonment, a surcharge (for late submission of filing fee, search fee, examination fee or oath or declaration) as set forth in 37 CFR 1.16(f) of $**65** for a small entity in compliance with 37 CFR 1.27, must be submitted with the missing items identified in this notice.

SUMMARY OF FEES DUE:

Total additional fee(s) required for this application is $**65** for a small entity
- $**65** Surcharge.

Replies should be mailed to:

Mail Stop Missing Parts
Commissioner for Patents
P.O. Box 1450
Alexandria VA 22313-1450

Registered users of EFS-Web may alternatively submit their reply to this notice via EFS-Web.
https://sportal.uspto.gov/authenticate/AuthenticateUserLocalEPF.html

For more information about EFS-Web please call the USPTO Electronic Business Center at **1-866-217-9197** or visit our website at http://www.uspto.gov/ebc.

If you are not using EFS-Web to submit your reply, you must include a copy of this notice.

/anguyen/

Office of Data Management, Application Assistance Unit (571) 272-4000, or (571) 272-4200, or 1-888-786-0101

UNITED STATES PATENT AND TRADEMARK OFFICE

UNITED STATES DEPARTMENT OF COMMERCE
United States Patent and Trademark Office
Address: COMMISSIONER FOR PATENTS
P.O. Box 1450
Alexandria, Virginia 22313-1450
www.uspto.gov

APPLICATION NUMBER	FILING or 371(c) DATE	GRP ART UNIT	FIL FEE REC'D	ATTY.DOCKET.NO	TOT CLAIMS	IND CLAIMS
12/649,765	12/30/2009	2861	670	1013-070	28	2

CONFIRMATION NO. 6124

22429
LOWE HAUPTMAN HAM & BERNER, LLP
1700 DIAGONAL ROAD
SUITE 300
ALEXANDRIA, VA 22314

FILING RECEIPT

OC000000039690296

Date Mailed: 01/19/2010

Receipt is acknowledged of this non-provisional patent application. The application will be taken up for examination in due course. Applicant will be notified as to the results of the examination. Any correspondence concerning the application must include the following identification information: the U.S. APPLICATION NUMBER, FILING DATE, NAME OF APPLICANT, and TITLE OF INVENTION. Fees transmitted by check or draft are subject to collection. Please verify the accuracy of the data presented on this receipt. **If an error is noted on this Filing Receipt, please submit a written request for a Filing Receipt Correction. Please provide a copy of this Filing Receipt with the changes noted thereon. If you received a "Notice to File Missing Parts" for this application, please submit any corrections to this Filing Receipt with your reply to the Notice. When the USPTO processes the reply to the Notice, the USPTO will generate another Filing Receipt incorporating the requested corrections**

Applicant(s)
Edmond ABERGEL, Paris, FRANCE;

Assignment For Published Patent Application
M.G.I. USA, Inc., Melbourne, FL

Power of Attorney: None

Domestic Priority data as claimed by applicant

Foreign Applications
FRANCE 08 07500 12/30/2008

If Required, Foreign Filing License Granted: 01/14/2010

The country code and number of your priority application, to be used for filing abroad under the Paris Convention, is **US 12/649,765**

Projected Publication Date: To Be Determined - pending completion of Missing Parts

Non-Publication Request: No

Early Publication Request: No
**** SMALL ENTITY ****

Title

INK JET PRINTER AND METHOD FOR DEPOSITING A PROTECTIVE LAYER ON A SUBSTRATE

Preliminary Class

347

PROTECTING YOUR INVENTION OUTSIDE THE UNITED STATES

Since the rights granted by a U.S. patent extend only throughout the territory of the United States and have no effect in a foreign country, an inventor who wishes patent protection in another country must apply for a patent in a specific country or in regional patent offices. Applicants may wish to consider the filing of an international application under the Patent Cooperation Treaty (PCT). An international (PCT) application generally has the same effect as a regular national patent application in each PCT-member country. The PCT process **simplifies** the filing of patent applications on the same invention in member countries, but **does not result** in a grant of "an international patent" and does not eliminate the need of applicants to file additional documents and fees in countries where patent protection is desired.

Almost every country has its own patent law, and a person desiring a patent in a particular country must make an application for patent in that country in accordance with its particular laws. Since the laws of many countries differ in various respects from the patent law of the United States, applicants are advised to seek guidance from specific foreign countries to ensure that patent rights are not lost prematurely.

Applicants also are advised that in the case of inventions made in the United States, the Director of the USPTO must issue a license before applicants can apply for a patent in a foreign country. The filing of a U.S. patent application serves as a request for a foreign filing license. The application's filing receipt contains further information and guidance as to the status of applicant's license for foreign filing.

Applicants may wish to consult the USPTO booklet, "General Information Concerning Patents" (specifically, the section entitled "Treaties and Foreign Patents") for more information on timeframes and deadlines for filing foreign patent applications. The guide is available either by contacting the USPTO Contact Center at 800-786-9199, or it can be viewed on the USPTO website at http://www.uspto.gov/web/offices/pac/doc/general/index.html.

For information on preventing theft of your intellectual property (patents, trademarks and copyrights), you may wish to consult the U.S. Government website, http://www.stopfakes.gov. Part of a Department of Commerce initiative, this website includes self-help "toolkits" giving innovators guidance on how to protect intellectual property in specific countries such as China, Korea and Mexico. For questions regarding patent enforcement issues, applicants may call the U.S. Government hotline at 1-866-999-HALT (1-866-999-4158).

LICENSE FOR FOREIGN FILING UNDER

Title 35, United States Code, Section 184

Title 37, Code of Federal Regulations, 5.11 & 5.15

GRANTED

The applicant has been granted a license under 35 U.S.C. 184, if the phrase "IF REQUIRED, FOREIGN FILING LICENSE GRANTED" followed by a date appears on this form. Such licenses are issued in all applications where the conditions for issuance of a license have been met, regardless of whether or not a license may be required as

set forth in 37 CFR 5.15. The scope and limitations of this license are set forth in 37 CFR 5.15(a) unless an earlier license has been issued under 37 CFR 5.15(b). The license is subject to revocation upon written notification. The date indicated is the effective date of the license, unless an earlier license of similar scope has been granted under 37 CFR 5.13 or 5.14.

This license is to be retained by the licensee and may be used at any time on or after the effective date thereof unless it is revoked. This license is automatically transferred to any related applications(s) filed under 37 CFR 1.53(d). This license is not retroactive.

The grant of a license does not in any way lessen the responsibility of a licensee for the security of the subject matter as imposed by any Government contract or the provisions of existing laws relating to espionage and the national security or the export of technical data. Licensees should apprise themselves of current regulations especially with respect to certain countries, of other agencies, particularly the Office of Defense Trade Controls, Department of State (with respect to Arms, Munitions and Implements of War (22 CFR 121-128)); the Bureau of Industry and Security, Department of Commerce (15 CFR parts 730-774); the Office of Foreign AssetsControl, Department of Treasury (31 CFR Parts 500+) and the Department of Energy.

NOT GRANTED

No license under 35 U.S.C. 184 has been granted at this time, if the phrase "IF REQUIRED, FOREIGN FILING LICENSE GRANTED" DOES NOT appear on this form. Applicant may still petition for a license under 37 CFR 5.12, if a license is desired before the expiration of 6 months from the filing date of the application. If 6 months has lapsed from the filing date of this application and the licensee has not received any indication of a secrecy order under 35 U.S.C. 181, the licensee may foreign file the application pursuant to 37 CFR 5.15(b).

PTO/SB/08a (05-07)
Approved for use through 09/30/2007. OMB 0651-0031
U.S. Patent and Trademark Office; U.S. DEPARTMENT OF COMMERCE
Under the Paperwork Reduction Act of 1995, no persons are required to respond to a collection of information unless it contains a valid OMB control number.

INFORMATION DISCLOSURE STATEMENT BY APPLICANT (**Not for submission under 37 CFR 1.99)**	Application Number	
	Filing Date	2009-12-30
	First Named Inventor	Edmond ABERGEL
	Art Unit	
	Examiner Name	
	Attorney Docket Number	1013-070

U.S.PATENTS						
Examiner Initial*	Cite No	Patent Number	Kind Code[1]	Issue Date	Name of Patentee or Applicant of cited Document	Pages,Columns,Lines where Relevant Passages or Relevant Figures Appear
	1	7614725		2009-11-10	Schulmeister	
	2	7451698		2008-11-18	Schneider et al.	
	3	4743924		1988-05-10	Scardovi	
	4	5502467		1996-03-26	Hoisington et al.	
	5	7332037		2009-02-19	Abergel et al.	US Equiv EP1749670
	6	7279506		2007-10-19	Sisler et al.	
If you wish to add additional U.S. Patent citation information please click the Add button.						
U.S.PATENT APPLICATION PUBLICATIONS						
Examiner Initial*	Cite No	Publication Number	Kind Code[1]	Publication Date	Name of Patentee or Applicant of cited Document	Pages,Columns,Lines where Relevant Passages or Relevant Figures Appear

INFORMATION DISCLOSURE STATEMENT BY APPLICANT (Not for submission under 37 CFR 1.99)	Application Number	
	Filing Date	2009-12-30
	First Named Inventor	Edmond ABERGEL
	Art Unit	
	Examiner Name	
	Attorney Docket Number	1013-070

	1	20040189732		2004-09-30	Usuda			
If you wish to add additional U.S. Published Application citation information please click the Add button.								
FOREIGN PATENT DOCUMENTS								
Examiner Initial*	Cite No	Foreign Document Number[3]	Country Code[2] ¡	Kind Code[4]	Publication Date	Name of Patentee or Applicant of cited Document	Pages,Columns,Lines where Relevant Passages or Relevant Figures Appear	T[5]
	1	1749670	EP		2007-02-07	MGI France		☐
	2	1621260	EP		2006-02-01	Toshiba Tec Kabushiki Kaisha		☐
	3	1186410	EP		2002-03-13	Seiko Epson Corporation		☐
If you wish to add additional Foreign Patent Document citation information please click the Add button								
NON-PATENT LITERATURE DOCUMENTS								
Examiner Initials*	Cite No	Include name of the author (in CAPITAL LETTERS), title of the article (when appropriate), title of the item (book, magazine, journal, serial, symposium, catalog, etc), date, pages(s), volume-issue number(s), publisher, city and/or country where published.						T[5]
	1							☐
If you wish to add additional non-patent literature document citation information please click the Add button								
EXAMINER SIGNATURE								
Examiner Signature						Date Considered		

*EXAMINER: Initial if reference considered, whether or not citation is in conformance with MPEP 609. Draw line through a citation if not in conformance and not considered. Include copy of this form with next communication to applicant.

EFS Web 2.0.1

INFORMATION DISCLOSURE STATEMENT BY APPLICANT (**Not for submission under 37 CFR 1.99)**	Application Number	
	Filing Date	2009-12-30
	First Named Inventor	Edmond ABERGEL
	Art Unit	
	Examiner Name	
	Attorney Docket Number	1013-070

[1] See Kind Codes of USPTO Patent Documents at www.USPTO.GOV or MPEP 901.04. [2] Enter office that issued the document, by the two-letter code (WIPO Standard ST.3). [3] For Japanese patent documents, the indication of the year of the reign of the Emperor must precede the serial number of the patent document. [4] Kind of document by the appropriate symbols as indicated on the document under WIPO Standard ST.16 if possible. [5] Applicant is to place a check mark here if English language translation is attached.

INFORMATION DISCLOSURE STATEMENT BY APPLICANT (**Not for submission under 37 CFR 1.99)**	Application Number	
	Filing Date	2009-12-30
	First Named Inventor	Edmond ABERGEL
	Art Unit	
	Examiner Name	
	Attorney Docket Number	1013-070

CERTIFICATION STATEMENT

Please see 37 CFR 1.97 and 1.98 to make the appropriate selection(s):

☐ That each item of information contained in the information disclosure statement was first cited in any communication from a foreign patent office in a counterpart foreign application not more than three months prior to the filing of the information disclosure statement. See 37 CFR 1.97(e)(1).

OR

☐ That no item of information contained in the information disclosure statement was cited in a communication from a foreign patent office in a counterpart foreign application, and, to the knowledge of the person signing the certification after making reasonable inquiry, no item of information contained in the information disclosure statement was known to any individual designated in 37 CFR 1.56(c) more than three months prior to the filing of the information disclosure statement. See 37 CFR 1.97(e)(2).

☐ See attached certification statement.

☐ Fee set forth in 37 CFR 1.17 (p) has been submitted herewith.

☒ None

SIGNATURE

A signature of the applicant or representative is required in accordance with CFR 1.33, 10.18. Please see CFR 1.4(d) for the form of the signature.

Signature	/Allan M. Lowe/	Date (YYYY-MM-DD)	2009-12-30
Name/Print	Allan M. Lowe	Registration Number	19641

This collection of information is required by 37 CFR 1.97 and 1.98. The information is required to obtain or retain a benefit by the public which is to file (and by the USPTO to process) an application. Confidentiality is governed by 35 U.S.C. 122 and 37 CFR 1.14. This collection is estimated to take 1 hour to complete, including gathering, preparing and submitting the completed application form to the USPTO. Time will vary depending upon the individual case. Any comments on the amount of time you require to complete this form and/or suggestions for reducing this burden, should be sent to the Chief Information Officer, U.S. Patent and Trademark Office, U.S. Department of Commerce, P.O. Box 1450, Alexandria, VA 22313-1450. DO NOT SEND FEES OR COMPLETED FORMS TO THIS ADDRESS. **SEND TO: Commissioner for Patents, P.O. Box 1450, Alexandria, VA 22313-1450.**

Privacy Act Statement

The Privacy Act of 1974 (P.L. 93-579) requires that you be given certain information in connection with your submission of the attached form related to a patent application or patent. Accordingly, pursuant to the requirements of the Act, please be advised that: (1) the general authority for the collection of this information is 35 U.S.C. 2(b)(2); (2) furnishing of the information solicited is voluntary; and (3) the principal purpose for which the information is used by the U.S. Patent and Trademark Office is to process and/or examine your submission related to a patent application or patent. If you do not furnish the requested information, the U.S. Patent and Trademark Office may not be able to process and/or examine your submission, which may result in termination of proceedings or abandonment of the application or expiration of the patent.

The information provided by you in this form will be subject to the following routine uses:

1. The information on this form will be treated confidentially to the extent allowed under the Freedom of Information Act (5 U.S.C. 552) and the Privacy Act (5 U.S.C. 552a). Records from this system of records may be disclosed to the Department of Justice to determine whether the Freedom of Information Act requires disclosure of these record s.

2. A record from this system of records may be disclosed, as a routine use, in the course of presenting evidence to a court, magistrate, or administrative tribunal, including disclosures to opposing counsel in the course of settlement negotiations.

3. A record in this system of records may be disclosed, as a routine use, to a Member of Congress submitting a request involving an individual, to whom the record pertains, when the individual has requested assistance from the Member with respect to the subject matter of the record.

4. A record in this system of records may be disclosed, as a routine use, to a contractor of the Agency having need for the information in order to perform a contract. Recipients of information shall be required to comply with the requirements of the Privacy Act of 1974, as amended, pursuant to 5 U.S.C. 552a(m).

5. A record related to an International Application filed under the Patent Cooperation Treaty in this system of records may be disclosed, as a routine use, to the International Bureau of the World Intellectual Property Organization, pursuant to the Patent Cooperation Treaty.

6. A record in this system of records may be disclosed, as a routine use, to another federal agency for purposes of National Security review (35 U.S.C. 181) and for review pursuant to the Atomic Energy Act (42 U.S.C. 218(c)).

7. A record from this system of records may be disclosed, as a routine use, to the Administrator, General Services, or his/her designee, during an inspection of records conducted by GSA as part of that agency's responsibility to recommend improvements in records management practices and programs, under authority of 44 U.S.C. 2904 and 2906. Such disclosure shall be made in accordance with the GSA regulations governing inspection of records for this purpose, and any other relevant (i.e., GSA or Commerce) directive. Such disclosure shall not be used to make determinations about individuals.

8. A record from this system of records may be disclosed, as a routine use, to the public after either publication of the application pursuant to 35 U.S.C. 122(b) or issuance of a patent pursuant to 35 U.S.C. 151. Further, a record may be disclosed, subject to the limitations of 37 CFR 1.14, as a routine use, to the public if the record was filed in an application which became abandoned or in which the proceedings were terminated and which application is referenced by either a published application, an application open to public inspections or an issued patent.

9. A record from this system of records may be disclosed, as a routine use, to a Federal, State, or local law enforcement agency, if the USPTO becomes aware of a violation or potential violation of law or regulation.

(19) Europäisches Patentamt
European Patent Office
Office européen des brevets

(11) EP 1 749 670 A1

(12) DEMANDE DE BREVET EUROPEEN

(43) Date de publication:
07.02.2007 Bulletin 2007/06

(51) Int Cl.:
B41J 11/00 (2006.01) *B41J 2/14* (2006.01)

(21) Numéro de dépôt: **06290969.2**

(22) Date de dépôt: **14.06.2006**

(84) Etats contractants désignés:
AT BE BG CH CY CZ DE DK EE ES FI FR GB GR HU IE IS IT LI LT LU LV MC NL PL PT RO SE SI SK TR
Etats d'extension désignés:
AL BA HR MK YU

(30) Priorité: **14.06.2005 FR 0505981**

(71) Demandeur: **MGI FRANCE**
94200 Ivry sur Seine (FR)

(72) Inventeurs:
- **Abergel, Edmond**
75012 Paris (FR)
- **Renaud, Raphaël**
Ivry sur Seine (FR)

(74) Mandataire: **Debay, Yves**
Cabinet Debay,
126 Elysée 2
78170 La Celle Saint Cloud (FR)

(54) **Machine numérique à jet pour la pose d'un revêtement sur un substrat**

(57) L'invention concerne une machine numérique d'impression sans contact pour des produits moyennement fluides, tels que du vernis, de la colle, de l'encre conductrice ou grattable, sur un substrat (13) d'épaisseur et de dimension variable. La machine comporte un dispositif spécial pour l'impression sans contact par projection. Les matières projetées sont des matières moyennement fluides ou composées par des molécules de grandes dimensions. Le procédé utilisé comprend un dispositif électro-acoustique de commande de la projection et une pluralité de buses (12) de projection chacune commandée individuellement.

La machine comporte d'autre part une chaîne de production avec différents postes de travail, dont le dispositif d'impression, commandés par un système (10) de gestion informatique. La chaîne de production permet une impression selon une certaine précision dans des zones déterminées repérées au court du traitement par un poste de travail approprié.

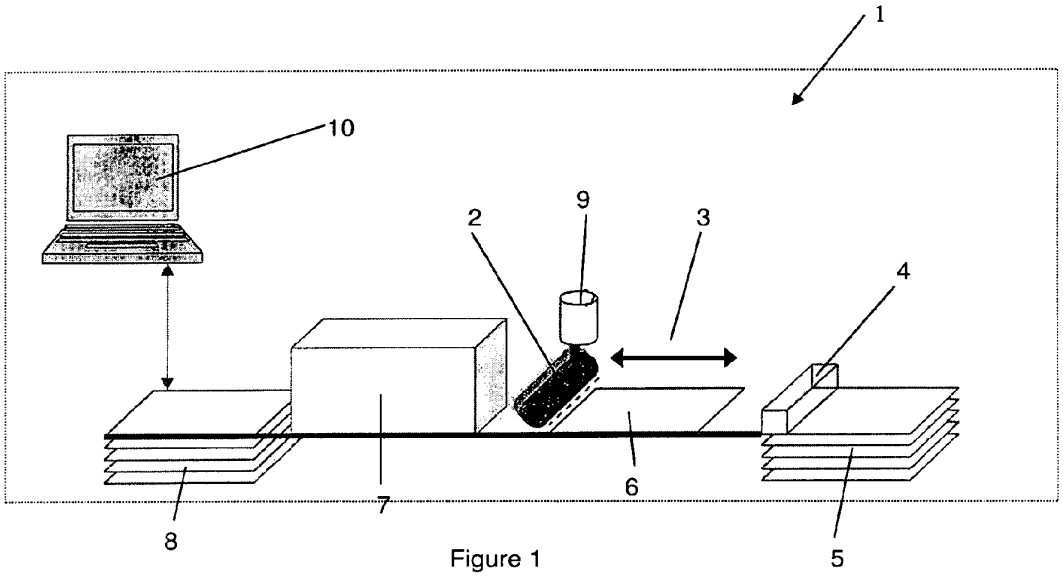

Figure 1

EP 1 749 670 A1

Printed by Jouve, 75001 PARIS (FR)

Description

[0001] L'invention concerne le domaine de l'impression sans contact physique avec un substrat dont au moins une face est en plastique et plus particulièrement une machine, indépendante d'un système d'impression, qui permet, avant ou après le système d'impression, la pose par jet de produit de viscosité, allant jusqu'à 1000 centipoises, et qualifiée de moyenne à importante, tels que du vernis, de la colle, de l'encre conductrice ou grattable, sur un substrat d'épaisseur et de dimension variable.

[0002] Il existe des systèmes d'impression à jet d'encre fonctionnant avec des encres dont la viscosité est faible et de l'ordre d'une dizaine de centipoises.

[0003] Les systèmes existant utilisent différentes techniques pour projeter une bulle d'encre sur le support. Selon une première technique l'encre contenue dans une buse est expulsée par une surpression créée par une bulle gazeuse formée au niveau d'une résistance de chauffage qui crée une réaction chimique en faisant passer l'encre à l'état gazeux. Une autre technique pour créer une surpression est d'utiliser un composant piézoélectrique qui va s'incurver sous l'effet d'une tension électrique, de façon à réduire le volume du réservoir d'encre. Une gouttelette d'encre est ainsi expulsée de la buse.

[0004] Ces systèmes sont toutefois limités à des encres ou des produits ayant une fluidité contrôlée et une viscosité faible ainsi que des molécules de très faible dimension. Par exemple il n'est pas possible avec les appareils existants de poser sans contact avec le support, des produits tels que du vernis, de l'encre grattable, de l'encre conductrice ou de la colle, notamment sur un substrat plastique ou la face plastique d'un substrat.

[0005] Jusqu'à présent la pose de tels produits sur des substrats, éventuellement plastique ou dont une face est plastifiée, s'effectuait par enduction et non par projection, ce qui rend complexe la pose sur seulement une portion de surface du substrat.

[0006] De plus il existe un réel besoin, notamment pour la personnalisation ou pour rendre des documents difficilement falsifiable, de pouvoir poser facilement sur un substrat, éventuellement avec une face plastique, d'une couche de produit dans une zone déterminée avant ou après impression du substrat

[0007] La présente invention a donc pour objet de palier un ou plusieurs inconvénients de l'art antérieur en créant une machine permettant de poser, sans contact sur une portion d'un substrat, des produits ou des encres ayant une fluidité moyenne, tels que du vernis, de la colle, de l'encre conductrice ou grattable, sur un substrat d'épaisseur et de dimension variable.

[0008] Cet objectif est atteint grâce à une machine numérique à jet de matière visqueuse pour pose d'un revêtement sur une face plastique d'un substrat comprenant un magasin d'entrée et un magasin de sortie, un moyen informatique de gestion des opérations sur chacun des postes de travail, un moyen de déplacement du substrat entre les différents postes de travail un moyen de préhension et de transfert du substrat, du magasin d'entrée vers le moyen de déplacement et du moyen de déplacement vers le magasin de sortie, caractérisé en ce qu'elle comporte au moins :

- un poste de lecture qui lit et détermine au moins une position du substrat et/ou de repères marqués sur le substrat,
- un poste de pose composé au moins d'une série de buses agencées selon une rampe, chaque buse étant pilotée séparément par des moyens de commandes, et alimentée par un réservoir contenant du produit à viscosité moyenne ou importante à projeter sur le substrat pendant un déplacement relatif entre le substrat et le poste de pose, pour effectuer la pose du produit dans une zone déterminée du substrat, les buses étant des aiguilles creuses mises en vibration chacune par un actionneur piézoélectrique collé sur un résonateur formé par le montage de l'aiguille creuse, l'excitation de l'actionneur en durée et puissance déterminant la dimension et la forme de la goutte de matière à viscosité moyenne à importante;
- un poste de séchage comportant un four de séchage à infra rouge ou à courant d'air chauffé ou UV ;

le contrôle des moyens de commande du poste de pose en fonction de la position du substrat, du poste de lecture et du poste de séchage et/ou la gestion des informations captées aux différents postes de travail pour coordonner les opérations étant effectué par les moyens informatiques de gestion en fonction d'un fichier de programmation établi.

[0009] Selon une autre particularité, la zone de pose est définie pour chaque substrat par un fichier de paramétrage concernant la forme de la zone, sa position sur le substrat par rapport aux repères du substrat, la quantité de produit à projeter, un logiciel de commande de la machine exploitant ces informations pour les traduire en paramètres de déplacement relatif du substrat et des buses, de commande sélective des buses et de réitération de passage décalé du substrat devant les buses pour produire si nécessaire des lignes jointives

[0010] Selon une autre particularité, la rampe dans laquelle sont agencées les buses est munie d'un moyen de déplacement par rapport au support.

[0011] Selon une autre particularité, le lieu de projection sur le substrat est défini par le déplacement relatif du substrat par rapport à la rampe dans laquelle sont agencées les buses.

[0012] Selon une autre particularité, le produit est une colle et le séchage est à courant d'air chauffé.

[0013] Selon une autre particularité, le produit est un vernis aqueux et le séchage est à infra rouge.

[0014] Selon une autre particularité, le produit est une encre opaque grattable et le séchage est à courant d'air chauffé.

[0015] Selon une autre particularité, la machine comporte un dispositif de mise en pression du produit à projeter.

[0016] Un autre but est de proposer une utilisation de cette machine dans un système de préparation de documents d'identification (carte d'identité, passeport, permis de conduire) ou de sécurité (badge d'accès, carte de paiement ou clé d'accès).

[0017] Ce but est atteint par l'utilisation d'une machine selon l'invention utilisée en amont ou en aval d'un poste autonome d'impression ou d'un poste de mise en place d'une puce électronique sur le substrat.

[0018] Selon une autre particularité, la machine selon l'invention est utilisée en amont du poste d'impression pour la pose de colle dans une zone différente de celle recevant l'impression et une deuxième machine est utilisée en aval du poste d'impression pour la pose d'un vernis sur la partie imprimée.

[0019] Selon une variante, la machine est utilisée en amont du poste d'impression pour la pose de vernis dans une zone différente de la zone recevant l'impression et une deuxième machine est utilisée en aval du poste d'impression pour la pose de colle dans une troisième zone.

[0020] Selon une variante, la machine est utilisée en amont du poste de mise en place d'une puce électronique sur le substrat pour la pose de colle dans la zone destinée à recevoir la puce.

[0021] L'invention, ses caractéristiques et ses avantages apparaîtront plus clairement à la lecture de la description faite en référence aux figures référencées ci-dessous :

La figure 1 représente un exemple de dispositif automatisé d'impression des supports;
La figure 2 représente un exemple de dispositif de projection;
La figure 3 représente des exemples de motifs de projection sur des supports;
La figure 4 représente schématiquement une configuration d'utilisation de deux machines selon l'invention.

[0022] Considérons maintenant la figure 1. La machine est contrôlée par un ordinateur de contrôle (10) qui commande les différents postes de travail et également qui collecte les informations des différents capteurs. Les capteurs donnent par exemple, des informations de positions des substrats (13), des informations de configurations des substrats (13) ou des informations de validation suite à une opération correctement effectuée ou non. Les substrats (13) en attente d'impression sont placés dans un magasin d'entrée (5) ayant une capacité définie en fonction de la nature du substrat (13) et des besoins pour l'impression. Dans un exemple de réalisation, le magasin d'entrée (5) est prévu pour accepter plusieurs milliers de substrats (13) de nature, d'épaisseur jusqu'à 800μm et de dimension variable (format carte de crédit jusqu'au format A0) et éventuellement dont au moins une face est en plastique. Une fois le processus de pose terminé, les substrats (13) sont stockés dans un magasin de sortie (8) ayant généralement la même capacité que le magasin d'entrée (5). Un dispositif de préhension (4) des substrats (13) permet de sortir les substrats (13) du magasin d'entrée (5) et de les disposer sur un convoyeur pour les déplacer le long d'une chaîne de travail comportant plusieurs postes de travail. Le premier poste de travail de la chaîne est un margeur (6) avec indexage du substrat (13) qui permet la mise en position par rapport à deux bords de référence ou la détection d'un repère imprimé sur le substrat (13). Un capteur va détecter les informations de positions et les transmettre à l'ordinateur par un réseau câblé ou sans fils. Ces informations stockées en mémoire dans l'ordinateur seront ensuite réutilisées à d'autres postes de travail, pilotés par l'ordinateur. Des contrôles sont également effectués afin de détecter la présence d'un substrat (13) unique à chaque poste du convoyeur.

[0023] Le poste de travail suivant est le dispositif de projection (2, 9) du produit à appliquer sur le support. Le dispositif de projection sans contact (2, 9) est détaillé sur la figure 2. Le dispositif de projection comporte un réservoir 9 qui contient le produit visqueux à projeter. Des exemples non limitatifs de produits contenus dans le réservoir sont du vernis, de l'encre grattable, de l'encre conductrice ou de la colle dont les viscosités moyennes sont comprises entre 100 et 1000 centipoises c'est à dire bien supérieures aux viscosités des encres d'impression qui sont normalement d'une dizaine de centipoises. L'alimentation du réservoir non représentée est effectuée, par exemple, manuellement ou automatiquement par un circuit d'alimentation ou encore de façon semi-automatique par un dispositif piloté par un opérateur. Le réservoir (9) est relié à un dispositif de mise en pression (10). Le système de projection nécessite en effet une pression déterminée pour avoir un bon fonctionnement. Le dispositif de mise en pression comporte donc un moyen de contrôler et de réguler la pression du produit envoyé vers les buses, de manière non limitative commandé par l'ordinateur. Les buses alimentées directement par le dispositif (10) de mise en pression, sont toutes pilotées individuellement par un dispositif de pilotage (11) des buses, de manière non limitative commandé par l'ordinateur. Les buses sont alignées et montées dans une rampe, formant ainsi une rampe de buses (12). Chaque buse est constituée par l'extrémité d'une aiguille creuse qui est mise en vibration par un actionneur piézoélectrique collé sur le résonateur formé par le montage de l'aiguille creuse en rampe. Le pilotage de chaque buse est un procédé électro-acoustique, c'est-à-dire que le produit est projeté par une vibration contrôlée par une excitation électrique. Les buses espacées de 0,1 à 0,5mm permettent ainsi de couvrir une surface précise.

[0024] La zone de pose est définie pour chaque substrat par un fichier de paramétrage contenu dans une zone mémoire de l'ordinateur, concernant la forme de la zone, sa position sur le substrat par rapport aux repères du

substrat, la quantité de produit à projeter, un logiciel de commande de la machine exploitant ces informations pour les traduire en paramètres de déplacement relatif du substrat et des buses, de commande sélective des buses et de réitération de passage décalé du substrat devant les buses pour produire si nécessaire de lignes jointives.

[0025] Le poste suivant de la machine de projection est le four (7) de séchage. Le four (7) permet de sécher complètement ou partiellement le produit projeté. Le séchage, en fonction du produit appliqué, peut être réalisé par un rayonnement infra rouge dans le cas d'un vernis aqueux ou par un courant d'air chauffé pour une colle ou une encre grattable ou par UV en fonction du produit projeté. Le séchage permet ensuite au substrat (13) d'être stocké dans le magasin (8) de sortie, sans que le produit projeté ne se transfère sur d'autres substrats (13) ou sur le magasin (8) avec lesquels le substrat (13) est en contact.

[0026] La figure 3 donne des exemples non limitatifs de poses réalisées par projection sur des substrats (13). Ainsi la pose d'une couche de vernis (14) est réalisé sur une face avant ou après une impression. Une couche de vernis occupe par exemple une zone sur le substrat quasiment rectangulaire, dont les coins sont arrondis. De manière non limitative, une marge non recouverte de produit projeté est laissée sur le pourtour de la face du substrat. Sur une zone (16, figure 3) d'un substrat une couche de colle réactivable thermiquement est réalisé, selon un motif, par exemple de petit rectangle arrondi en ses coins. Des motifs différents d'encre grattable (15) sont posés sur d'autres zones, comme par exemple une flèche, une étoile ou tout autre motif comportant, de manière non limitative, un contour formé d'angles et de lignes droites et/ou de courbes.

[0027] En référence à la figure 4, en disposant deux machines, l'une (1A) avant l'impression, l'autre (1 B) après l'impression et en chargeant les réservoirs de ces machines avec les produits visqueux appropriés différentes impressions sont réalisées, de manière non limitative, sur deux faces d'un substrat. Ces impressions sont, par exemple, des zones imprimées et protégées par un vernis, des zones imprimées et recouvertes d'une encre grattable ou des zones encollées ou encore une combinaison de ces différentes possibilités sur n'importe quelle face. L'impression sur les différentes faces est réalisée par un mécanisme de retournement (non représenté) entre une machine et la machine suivante ou précédente.

[0028] La commande électro-acoustique permet de régler la projection de matière en durée et en puissance. Les zones de pose sont alors définies par ce procédé numérique avec une précision de l'ordre de 0,1mm. La machine peut donc poser un point ou encore de recouvrir toute la surface d'un substrat. La zone de pose est définie pour chaque substrat par un fichier de paramétrage concernant la forme de la zone, sa position sur le substrat par rapport aux repères du substrat, la quantité de produit à projeter. Un logiciel de commande de la machine exploite ces informations pour les traduire en paramètres de déplacement relatif du substrat et des buses, en paramètres de commande sélective des buses et en paramètres de réitération de passage décalé du substrat devant les buses pour produire si nécessaire des lignes jointives.

[0029] Dans un autre exemple de réalisation, la chaîne de travail comporte d'autre poste de travail additionnel permettant par exemple l'assemblage de différentes pièces entre elles, dans le cas d'une application de colle sur des zones de contact déterminées.

[0030] Il doit être évident pour les personnes versées dans l'art que la présente invention permet des modes de réalisation sous de nombreuses autres formes spécifiques sans l'éloigner du domaine d'application de l'invention comme revendiqué. Par conséquent, les présents modes de réalisation doivent être considérés à titre d'illustration, mais peuvent être modifiés dans le domaine défini par la portée des revendications jointes, et l'invention ne doit pas être limitée aux détails donnés ci-dessus.

Revendications

1. Machine numérique à jet de matière visqueuse pour pose d'un revêtement sur une face plastique d'un substrat (13) comprenant un magasin d'entrée (5) et un magasin de sortie (8), un moyen informatique (10) de gestion des opérations sur chacun des postes de travail, un moyen de déplacement du substrat entre les différents postes de travail un moyen (4) de préhension et de transfert du substrat (13), du magasin d'entrée vers le moyen de déplacement et du moyen de déplacement vers le magasin de sortie, **caractérisé en ce qu'**elle comporte au moins :

   - un poste de lecture (6) qui lit et détermine au moins une position du substrat et/ou de repères marqués sur le substrat,
   - un poste de pose (2, 9, 10, 11, 12) composé au moins d'une série de buses (12) agencées selon une rampe, chaque buse étant pilotée séparément par des moyens de commandes, et alimentée par un réservoir (9) contenant du produit à viscosité moyenne ou importante à projeter sur le substrat pendant un déplacement relatif entre le substrat et le poste de pose, pour effectuer la pose du produit dans une zone déterminée du substrat, les buses étant des aiguilles creuses mises en vibration chacune par un actionneur piézoélectrique collé sur un résonateur formé par le montage de l'aiguille creuse, l'excitation de l'actionneur en durée et puissance déterminant la dimension et la forme de la goutte de matière à viscosité moyenne à importante;
   - un poste de séchage (7) comportant un four

de séchage à infra rouge ou à courant d'air chauffé ou UV ;

le contrôle des moyens de commande du poste de pose en fonction de la position du substrat, du poste de lecture et du poste de séchage et/ou la gestion des informations captées aux différents postes de travail pour coordonner les opérations étant effectué par les moyens informatiques de gestion en fonction d'un fichier de programmation établi.

2. Machine selon la revendication 1, **caractérisée en ce que** la zone de pose est définie pour chaque substrat par un fichier de paramétrage concernant la forme de la zone, sa position sur le substrat par rapport aux repères du substrat, la quantité de produit à projeter, un logiciel de commande de la machine exploitant ces informations pour les traduire en paramètres de déplacement relatif du substrat et des buses, de commande sélective des buses et de réitération de passage décalé du substrat devant les buses pour produire si nécessaire des lignes jointives

3. Machine selon la revendication 1 ou 2, **caractérisée en ce que** la rampe dans laquelle sont agencées les buses est munie d'un moyen de déplacement (3) par rapport au support.

4. Machine selon une des revendications 1 à 3, **caractérisée en ce que** le lieu de projection sur le substrat est défini par le déplacement relatif du substrat par rapport à la rampe dans laquelle sont agencées les buses.

5. Machine selon une des revendications 1 à 4, **caractérisée en ce que** le produit est une colle et le séchage est à courant d'air chauffé.

6. Machine selon une des revendications 1 à 4, **caractérisée en ce que**, le produit est un vernis aqueux et le séchage est à infra rouge.

7. Machine selon une des revendications 1 à 4, **caractérisée en ce que**, le produit est une encre opaque grattable et le séchage est à courant d'air chauffé.

8. Machine selon une des revendications 1 à 7, **caractérisée en ce qu'**elle comporte un dispositif de mise en pression du produit à projeter (10).

9. Utilisation d'une machine selon une des revendications précédentes, **caractérisée en ce qu'**elle est utilisée en amont ou en aval d'un poste autonome d'impression ou d'un poste de mise en place d'une puce électronique sur le substrat.

10. Utilisation d'une machine selon la revendication 9, **caractérisée en ce qu'**elle est utilisée en amont du poste d'impression pour la pose de colle dans une zone différente de celle recevant l'impression et une deuxième machine est utilisée en aval du poste d'impression pour la pose d'un vernis sur la partie imprimée.

11. Utilisation d'une machine selon la revendication 9, **caractérisée en ce qu'**elle est utilisée en amont du poste d'impression pour la pose de vernis dans une zone différente de la zone recevant l'impression et une deuxième machine est utilisée en aval du poste d'impression pour la pose de colle dans une troisième zone.

12. Utilisation d'une machine selon la revendication 9, **caractérisée en ce qu'**elle est utilisée en amont du poste de mise en place d'une puce électronique sur le substrat pour la pose de colle dans la zone destinée à recevoir la puce.

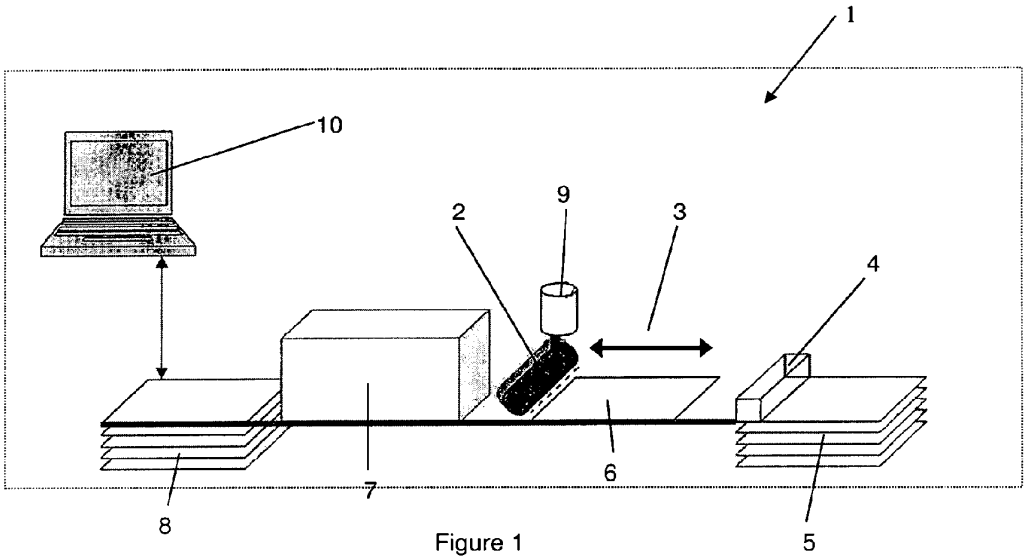

Figure 1

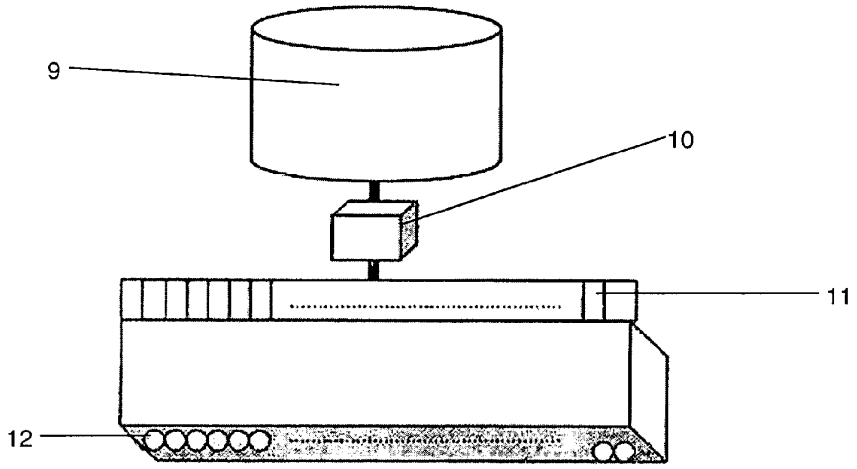

Figure 2

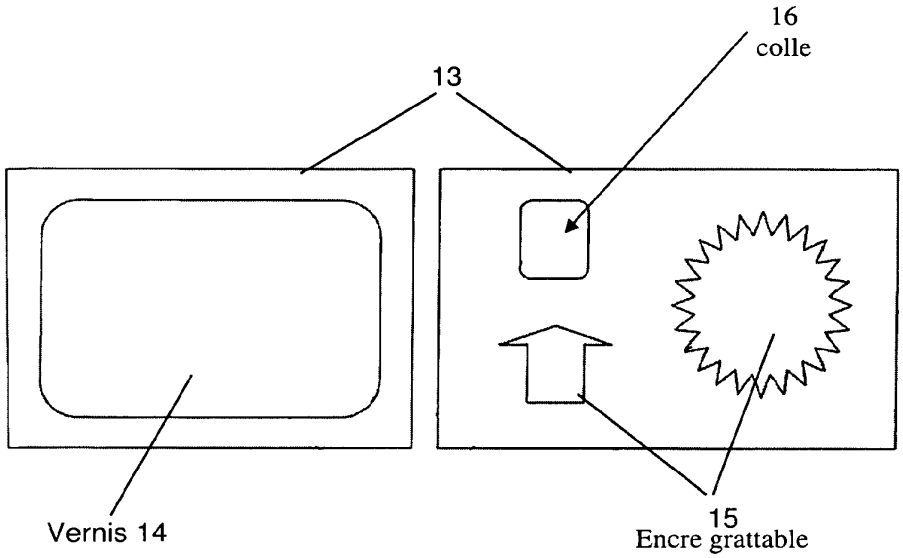

Figure 3

Figure 4

Office européen des brevets

RAPPORT DE RECHERCHE EUROPEENNE

Numéro de la demande
EP 06 29 0969

DOCUMENTS CONSIDERES COMME PERTINENTS

Catégorie	Citation du document avec indication, en cas de besoin, des parties pertinentes	Revendication concernée	CLASSEMENT DE LA DEMANDE (IPC)
Y	EP 1 442 892 A (FUJI PHOTO FILM CO., LTD) 4 août 2004 (2004-08-04)	1-4	INV. B41J11/00
A	* alinéa [0159] - alinéa [0179]; figure 7 *	5-12	B41J2/14
A	EP 1 063 096 A (EASTMAN KODAK COMPANY) 27 décembre 2000 (2000-12-27) * abrégé * * alinéa [0022] - alinéa [0023]; figure 3 *	1-12	
A	US 3 466 659 A (ENZO ASCOLI) 9 septembre 1969 (1969-09-09) * le document en entier *	1-12	
A	US 3 950 760 A (RAUCH ET AL) 13 avril 1976 (1976-04-13) * le document en entier *	1-12	
Y	US 4 868 583 A (DREINHOFF KARL H [DE] ET AL) 19 septembre 1989 (1989-09-19) * colonne 4, ligne 1 - ligne 12; figure 1 *	1-4	DOMAINES TECHNIQUES RECHERCHES (IPC) B41J
Y	EP 0 193 678 A1 (OLIVETTI & CO SPA [IT]) 10 septembre 1986 (1986-09-10) * page 2, ligne 13 - ligne 29; figure 1 *	1-4	

Le présent rapport a été établi pour toutes les revendications

Lieu de la recherche	Date d'achèvement de la recherche	Examinateur
Munich	13 novembre 2006	Urbaniec, Tomasz

CATEGORIE DES DOCUMENTS CITES

X : particulièrement pertinent à lui seul
Y : particulièrement pertinent en combinaison avec un autre document de la même catégorie
A : arrière-plan technologique
O : divulgation non-écrite
P : document intercalaire

T : théorie ou principe à la base de l'invention
E : document de brevet antérieur, mais publié à la date de dépôt ou après cette date
D : cité dans la demande
L : cité pour d'autres raisons
& : membre de la même famille, document correspondant

EPO FORM 1503 03.82 (P04C02)

ANNEXE AU RAPPORT DE RECHERCHE EUROPEENNE RELATIF A LA DEMANDE DE BREVET EUROPEEN NO. EP 06 29 0969

La présente annexe indique les membres de la famille de brevets relatifs aux documents brevets cités dans le rapport de recherche européenne visé ci-dessus.
Lesdits members sont contenus au fichier informatique de l'Office européen des brevets à la date du
Les renseignements fournis sont donnés à titre indicatif et n'engagent pas la responsabilité de l'Office européen des brevets.

13-11-2006

Document brevet cité au rapport de recherche		Date de publication	Membre(s) de la famille de brevet(s)			Date de publication
EP 1442892	A	04-08-2004	CN	1519112	A	11-08-2004
			JP	2004230709	A	19-08-2004
			US	2004183879	A1	23-09-2004
EP 1063096	A	27-12-2000	DE	19929323	A1	28-12-2000
US 3466659	A	09-09-1969	AT	275178	B	10-10-1969
			CH	425838	A	15-12-1966
			DE	1511379	B1	03-12-1970
			GB	1095689	A	20-12-1967
			JP	48021051	B	26-06-1973
			NL	6611873	A	30-03-1967
US 3950760	A	13-04-1976	CA	1013020	A1	28-06-1977
			DE	2361781	A1	19-06-1975
			FR	2271933	A1	19-12-1975
			GB	1458757	A	15-12-1976
			IT	1024374	B	20-06-1978
			JP	50092643	A	24-07-1975
			SE	393885	B	23-05-1977
			SE	7415375	A	13-06-1975
US 4868583	A	19-09-1989	DE	3729205	A1	09-03-1989
			EP	0305317	A1	01-03-1989
EP 0193678	A1	10-09-1986	DE	3569394	D1	18-05-1989
			IT	1182402	B	05-10-1987
			JP	61202851	A	08-09-1986
			US	4651174	A	17-03-1987

EPO FORM P0460

Pour tout renseignement concernant cette annexe : voir Journal Officiel de l'Office européen des brevets, No.12/82

(19) Europäisches Patentamt
European Patent Office
Office européen des brevets

(11) EP 1 621 260 A1

(12) **EUROPEAN PATENT APPLICATION**

(43) Date of publication:
01.02.2006 Bulletin 2006/05

(51) Int Cl.:
B05D 3/02 (2006.01) *B05D 3/06* (2006.01)

(21) Application number: **05014458.3**

(22) Date of filing: **04.07.2005**

(84) Designated Contracting States:
AT BE BG CH CY CZ DE DK EE ES FI FR GB GR HU IE IS IT LI LT LU LV MC NL PL PT RO SE SI SK TR
Designated Extension States:
AL BA HR MK YU

(30) Priority: **29.07.2004 JP 2004222191**

(71) Applicant: **Toshiba Tec Kabushiki Kaisha**
Tokyo 141-8664 (JP)

(72) Inventors:
- **Ohtsu, Kazuhiko**
  c/o Intell. Prop. Division
  Shinagawa-ku
  Tokyo 141-8664 (JP)
- **Ushirogouchi, Toru**
  c/o Intell. Prop. Division
  Shinagawa-ku
  Tokyo 141-8664 (JP)
- **Akiyama, Ryozo**
  c/o Intell. Prop. Division
  Shinagawa-ku
  Tokyo 141-8664 (JP)
- **Kiyomoto, Hiroshi**
  c/o Intell. Prop. Division
  Shinagawa-ku
  Tokyo 141-8664 (JP)
- **Ishibashi, Mitsuru**
  c/o Intell. Prop. Division
  Shinagawa-ku
  Tokyo 141-8664 (JP)
- **Hiroki, Masashi**
  c/o Intell. Prop. Division
  Shinagawa-ku
  Tokyo 141-8664 (JP)
- **Kawakami, Yukiko**
  c/o Intell. Prop. Division
  Shinagawa-ku
  Tokyo 141-8664 (JP)

(74) Representative: **Kramer - Barske - Schmidtchen**
Radeckestrasse 43
81245 München (DE)

(54) **Curing method of radiation-cure type liquid composition and inkjet recording apparatus**

(57) There is proposed a method of curing an electromagnetic radiation-curing type liquid composition comprising a solvent polymerizable in the presence of an acid, and a photo-acid generating agent which is dissolved in the solvent and capable of generating the acid when irradiated with electromagnetic radiation. This method comprises forming a layer of the electromagnetic radiation-curing type liquid composition on a recording medium, and irradiating electromagnetic radiation including a wavelength which can be absorbed by the photo-acid generating agent onto the composition layer to generate the acid from the photo-acid generating agent, thereby curing the composition layer, which is characterized in that the recording medium is heated on the occasion of forming the layer of the electromagnetic radiation-curing type liquid composition in such a manner that the temperature of the recording medium is increased higher than the temperature of the electromagnetic radiation-curing type liquid composition being delivered onto the recording medium.

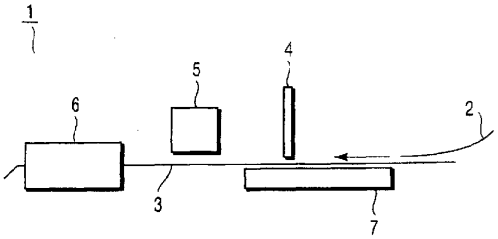

FIG. 1

EP 1 621 260 A1

Printed by Jouve, 75001 PARIS (FR)

Description

[0001] This invention relates to a method of curing an electromagnetic radiation-curing type liquid composition which is curable by an acid generated from the irradiation of the ink composition by electromagnetic radiation. This invention also relates to an inkjet recording apparatus.

[0002] In recent years, since it is possible to quickly cope with increasingly versatile needs and to reduce the quantity of stocks, on-demand printers are now increasingly employed. As specific examples of an on-demand printer, an electrophotographic printer which employs a toner or a liquid toner as well as an inkjet printer which is capable of achieving high-speedy and high-quality printing are expected to be useful. In the case of the inkjet printer, a solvent-type ink can be handled in a closed system until the ink is delivered to a printing surface (i.e. a surface to be printed). The ink to be employed therein is required to be sufficiently fluid for delivery, so that the concentration of the solvent in the ink is required to be sufficiently increased. Therefore, it is difficult, in the case of this solvent type ink, to solve the problem of pollution of the atmosphere by an organic solvent. Further, in the case of this solvent type ink, there is a possibility of generating a degraded printed surface which may occur in the process of drying the ink layer, thereby making it not necessarily easy to obtain printed matter of high quality.

[0003] With a view to solving the aforementioned problem originating from the employment of an organic solvent, there has been proposed the employment of an ink that can be cured by UV irradiation (hereinafter referred to as UV ink) and a printer system using the UV ink. As for the UV ink, one of representative examples thereof includes one comprising a radically polymerizable monomer, a photopolymerization initiator, and a pigment. According to this printer system using the UV ink, the UV ink that has been delivered onto a printing surface can be quickly photo-cured. Since the ink layer can be instantaneously non-fluidized as described above, it is possible to obtain printed matter of relatively high quality. Ordinary UV inks however are accompanied with a problem that if a printing surface is formed of an absorptive medium, it is difficult to quickly cure the UV ink existing deep inside the absorptive printing matter.

[0004] Recently, there has been proposed an inkjet recording apparatus which comprises an inkjet recording head for delivering an ink onto a recording medium to form an ink layer; means for transferring the recording medium; a light source for irradiating light onto the ink layer; and heating means for heating the ink layer. In the recording process using this recording apparatus, a photo-curable inkjet ink is employed, the photo-curable inkjet ink comprising a photo-acid generating agent which is capable of generating the acid as it is irradiated with electromagnetic radiation, a colorant component, and a solvent which is polymerizable in the presence of an acid, and electromagnetic radiation is irradiated onto the ink layer formed on the surface of a recording medium. As a result, an acid is generated from the photo-acid generating agent in the ink and this acid then diffuses into the ink layer as the ink layer is heated. Thus, the acid acts as a catalyst for the polymerization reaction of the ink, thereby making it possible to cure even the ink that has penetrated deep into the absorptive paper. However, this inkjet recording apparatus is accompanied with a problem that it is required to separately install a large heating means which is much larger in scale than that to be employed in an inkjet recording apparatus using the ordinary ink (acrylic photo-curable inkjet ink).

[0005] Since the acrylic photo-curable inkjet ink is higher in viscosity at normal temperature than that of the ordinary inkjet ink, a heating means is required to be installed at a supply passageway for feeding the UV ink into the recording head in order to lower the viscosity of the UV ink so as to enable the UV ink to be stably discharged. Further, there is also known an inkjet recording apparatus which is provided with a recording medium temperature-detecting means for detecting the temperature of a recording medium and with a recording medium temperature-controlling means for controlling the temperature of the recording medium to a target temperature, thereby making it possible to adjust the spreading of each dot on the recording medium which can be formed by a droplet of ink, thus ensuring high quality printing.

[0006] Moreover, there is also known an inkjet recording apparatus which is provided with a recording medium-selecting means for enabling printing to be performed on various kinds of recording mediums, with an inkjet nozzle temperature-controlling means, and a recording medium temperature-controlling medium, thereby making it possible to adjust the conditions suited to the recording medium, i.e., to adjust the temperature of ink as well as the temperature of the recording medium, thus ensuring high quality printing.

[0007] Since the conventional inkjet recording apparatuses mentioned above require a large scale heating means for heating the recording medium and the liquid composition for the UV ink, it is impossible to prevent the recording apparatus from becoming very large in scale. Further, the heat to be irradiated from the light-irradiating means together with electro-magnetic radiation such as ultraviolet rays as well as the heat from the heating means cannot necessarily be effectively utilized, thus allowing these heats to be taken away by the recording medium or the transferring means. As a result, it would be impossible to sufficiently heat the ink layer to enable the curing of the UV ink, thus resulting in insufficient heating. In that case, the diffusion of the acid which is deemed to be the lifeline of the chemical amplification mechanism of ink cannot be sufficiently executed, thus giving rise to insufficient curing of the ink.

[0008] An object of the present invention is to provide a method of effectively curing an electromagnetic radiation-curing type liquid composition comprising a solvent which is polymerizable in the presence of an acid, and a photo-acid generating agent which is dissolved in the solvent and capable of generating the acid as it is irradiated with electromagnetic radiation.

[0009] Another object of the present invention is to provide an apparatus which is capable of discharging an electromagnetic radiation-curing type liquid composition by inkjet so as to effectively perform recording, wherein the ink composition comprises a solvent which is polymerizable in the presence of an acid, and a photo-acid generating agent which is dissolved in the solvent and capable of generating the acid as it is irradiated with electromagnetic radiation.

[0010] According to one aspect of the present invention, there is provided a method of curing an electromagnetic radiation-curing type liquid composition comprising a solvent which is polymerizable in the presence of an acid, and a photo-acid generating agent which is dissolved in the solvent and capable of generating the acid as it is irradiated with electromagnetic radiation, the method comprising: forming a layer of the electromagnetic radiation-curing type liquid composition on a recording medium; and irradiating electromagnetic radiation including a wavelength which can be absorbed by the photo-acid generating agent onto the layer of the electromagnetic radiation-curing type liquid composition to generate the acid from the photo-acid generating agent, thereby curing the layer of the electromagnetic radiation-curing type liquid composition; wherein the recording medium is heated on the occasion of forming the layer of the electro-magnetic radiation-curing type liquid composition in such a manner that the temperature of the recording medium is increased higher than the temperature of the electromagnetic radiation-curing type liquid composition being delivered onto the recording medium.

[0011] According to another aspect of the present invention, there is provided an inkjet recording apparatus comprising: a delivering means delivering an electromagnetic radiation-curing type liquid composition onto the recording medium by an inkjet recording head, the ink composition comprising a solvent which is polymerizable in the presence of an acid, and a photo-acid generating agent which is dissolved in the solvent and capable of generating the acid as it is irradiated with electromagnetic radiation; a transferring means moving the recording medium and the inkjet recording head relative to each other; a heat source heating the recording medium at least until the ink composition is delivered from the inkjet recording head; and an irradiation source irradiating electromagnetic radiation including a wavelength that can be absorbed by the photo-acid generating agent to the electromagnetic radiation-curing type liquid composition that has been heated by the heat source.

[0012] This summary of the invention does not necessarily describe all necessary features so that the invention may also be a sub-combination of these described features.

[0013] The invention can be more fully understood from the following detailed description when taken in conjunction with the accompanying drawings, in which:

FIG. 1 is a block diagram schematically illustrating the inkjet recording apparatus according to one embodiment of the present invention;

FIG. 2 is a block diagram schematically illustrating the inkjet recording apparatus according to another embodiment of the present invention;

FIG. 3 is a block diagram schematically illustrating the inkjet recording apparatus according to a further embodiment of the present invention;

FIG. 4 is a plan view schematically illustrating a non-contact type converging halogen heater employed in the inkjet recording apparatus shown in FIG. 2;

FIG. 5 is a block diagram schematically illustrating the inkjet recording apparatus according to a further embodiment of the present invention;

FIG. 6 is a block diagram schematically illustrating the inkjet recording apparatus according to a further embodiment of the present invention;

FIG. 7 is a block diagram schematically illustrating the inkjet recording apparatus according to a further embodiment of the present invention;

FIG. 8 is a block diagram schematically illustrating the inkjet recording apparatus according to a further embodiment of the present invention; and

FIG. 9 is a block diagram schematically illustrating the inkjet recording apparatus according to a further embodiment of the present invention.

[0014] Next, various embodiments of the present invention will be explained.

[0015] In the method according to one embodiment of the present invention, there is employed an electromagnetic radiation-curing type liquid composition comprising a solvent which is polymerizable in the presence of an acid, a photo-acid generating agent which is capable of generating the acid as it is irradiated with light. The image-forming capability of this kind of liquid composition depends largely on the chemically amplification mechanism thereof. Namely, at first, when the liquid composition is irradiated with electromagnetic radiation such as ultraviolet rays (irradiation of light), an acid is generated from the photo-acid generating agent and this acid then diffuses into the layer of electromagnetic radiation-curing type liquid composition due to the heating thereof, thus the acid acts as a catalyst for the cross-linking reaction of the acid-polymerizable solvent. In this case, the electromagnetic radiation to be irradiated includes a wavelength that can be absorbed by the photo-acid generating agent. Due to this diffusion of the acid, it is now possible to

enable the acid to penetrate even into the deep region of the layer to which the light is incapable of being transmitted due to the obstruction by the coloring materials for example, thus making it possible to promote the curing throughout an extensive region of the layer.

[0016] In the curing method according to one embodiment of the present invention in particular, it is desirable that the viscosity of the liquid composition such as ink is adjusted to a predetermined value in order to enable the liquid composition to be stably delivered from a recording head. Specifically, it is desirable that the liquid composition has a fluidity which is confined within a predetermined range at normal temperature. For example, the viscosity of the liquid composition should be 50 cp or less, more preferably 30 cp or less at a temperature of 25°C.

[0017] In the liquid composition to be employed in the method according to one embodiment of the present invention, the solvent thereof which is polymerizable in the presence of an acid can be formed of at least one kind of compound selected from the group consisting of epoxy compounds having an alicyclic skeleton and/or an aliphatic skeleton, vinyl ether compounds, oxiran group-containing compound and oxetane ring-containing compound. In particular, an acid-polymerizable compound having an alicyclic skeleton and/or an aliphatic skeleton and exhibiting a viscosity of not more than 50 mPa·s at ordinary temperature and ordinary pressure and a boiling point of not less than 150°C is preferable for use as an acid-polymerizable solvent.

[0018] As for the photo-acid generating agent, it is possible to employ, for example, onium salts, diazonium salts, quinone diazide compounds, organic halides, aromatic sulfonate compounds, bisulfone compounds, sulfonyl compounds, sulfonate compounds, sulfonium compounds, sulfamide compounds, iodonium compounds, sulfonyl diazomethane compounds and mixtures thereof.

[0019] The mixing ratio of the photo-acid generating agent in the liquid composition may be confined within the range of 0.5 to 10 parts by weight in bulk per 100 parts by weight of the acid-polymerizable solvent. If the photo-acid generating agent is employed together with polycarbonate as a 1:1 mixture, the photo-acid generating agent can be employed at a ratio of about 1 to 20 parts by weight per 100 parts by weight of the acid-polymerizable solvent. A more preferable mixing ratio of the photo-acid generating agent in the liquid composition would be 1 to 12 parts by weight per 100 parts by weight of the acid-polymerizable solvent.

[0020] When a coloring component is incorporated in the liquid composition in addition to the aforementioned components, the liquid composition can be formulated into an electromagnetic radiation-curing type UV ink. As for the coloring component, it is possible to employ pigments which can be organic or inorganic. The mixing ratio of the coloring component in the liquid composition may be confined within the range of 0 to 20 parts by weight per 100 parts by weight of the acid-polymerizable compound. A more preferable mixing ratio of the coloring component in the liquid composition would be about 3 to 6 parts by weight per 100 parts by weight of the acid-polymerizable compound.

[0021] The electromagnetic radiation-curing type liquid composition to be employed in the method according to one embodiment of the present invention can be manufactured by a process wherein predetermined components are homogenously mixed together and then filtered using a PTFE filter for example to obtain the liquid composition.

[0022] Next, the inkjet recording apparatus according to one embodiment of the present invention will be explained with reference to the drawings.

[0023] FIG. 1 shows schematically the inkjet recording apparatus according to one embodiment of the present invention. This inkjet recording apparatus 1 is provided with transferring means 3. Along the moving direction of this transferring means 3, there are successively arrayed, from the upstream side to the downstream side, a recording medium temperature-controlling means 7, an inkjet type recording head 4, a light-irradiating means 5, and a heating means 6.

[0024] With respect to the recording medium 2, there is no any particular limitation on the kinds thereof as long as printing is enabled to be performed thereon. Namely, it is possible to employ, for example, various kinds of materials including paper, an OHP sheet, a resin film, non-woven fabric, a porous film, a plastic plate, a circuit board and a metallic substrate.

[0025] The transferring means 3 is constructed so as to enable the recording medium 2 to pass successively through the recording medium temperature-controlling means 7, the recording head 4, the light-irradiating means 5 and the front surface of heating means 6. In this case, the transferring means 3 is designed such that the recording medium 2 can be transferred from the right side to the left side in the drawing. This transferring means 3 can be constituted for example by a belt and/or a roller for transferring the recording medium 2, and a driving mechanism (not shown) for driving the belt and/or the roller. Further, this transferring means 3 may be further provided with a guiding member for assisting the transfer of the recording medium 2. Alternatively, this transferring means 3 may be formed of a stage structure which is designed to run slidably on a linear base so as to transfer the recording medium 2 of sheet-like configuration.

[0026] The recording head 4 delivers an electromagnetic radiation curing type UV ink onto the recording medium 2 according to image signals, thereby forming an ink layer. As already explained above, the electromagnetic radiation curing type UV ink is an electromagnetic radiation curing type liquid composition. As for the recording head 4, it is possible to employ, for example, a serial scanning type head mounted on a carriage or a line scanning type head having a width which is the same as or larger than the width of the recording medium 2. As far as high-speed printing is concerned, the latter is generally more advantageous as compared with the former. As for the manner of delivering the electromagnetic

radiation curing type UV ink from the recording head 4, there is no any particular limitation. For example, it is possible to employ a method where ink droplet will be ejected taking advantage of the pressure of vapor that can be generated by the heat of a heating element. Alternatively, the ink droplet may be ejected by taking advantage of a mechanical pressure pulse that can be generated by a piezoelectric element.

[0027] The light-irradiating means 5 as an irradiation source irradiates light to the ink layer formed on the recording medium 2, thus generating acid in the ink layer. As for the light-irradiating means 5, it is possible to employ, for example, a mercury lamp such as a low, medium or high pressure mercury lamp; a tungsten lamp; a xenon lamp; an arc lamp; an excimer lamp; an excimer laser; a semiconductor laser; a YAG laser; a laser system constituted by a combination of laser and non-linear optical crystal; a high-frequency induction ultraviolet generating apparatus; an electron beam irradiating apparatus; an X-ray irradiating apparatus; etc. Among them, the employment of the high-frequency induction ultraviolet generating apparatus, the high/low pressure mercury lamp and the semiconductor laser would be more preferable, since these devices are advantageous in simplifying the system involved. When ultraviolet rays are to be employed, the wavelength of the ultraviolet rays should preferably be confined within the range of 100 nm to 600 nm. The light to be irradiated from the light-irradiating means 5 may not be restricted to ultraviolet rays. Namely, the light can be optionally selected depending on the photosensitive wavelength of the photo-acid generating agent included in the electromagnetic radiation-curing type liquid composition or in the electromagnetic radiation-curing type UV ink. It is especially preferable to employ the light having a peak illuminance in the vicinity of 250 nm or 365 nm. The light-irradiating means 5 may be provided with a converging mirror or a sweep optical system.

[0028] The heating means (heat source) 6 is employed to heat the ink layer on the recording layer 2 so as to promote the cross-linking reaction using, as a catalyst, the acid that has been generated in the ink layer by the irradiation of electromagnetic radiation. As for the heating means 6, it is possible to employ an infrared lamp, a halogen heater, a far-infrared ceramic heater, a roller provided therein with a heating element (heat roller), a blower for blowing out hot air or heated air, etc. If a metallic recording medium is to be employed in a high-speed printing apparatus where the printing speed thereof is as high as several tens of meters per minute in particular, it is desirable that the surface temperature of the recording medium can be instantaneously risen. This can be realized by using a non-contact type converging halogen heater. Alternatively, the non-contact lamp type heating means 6 may be provided with a converging mirror.

[0029] On this occasion, the quantity of heat to be applied to the recording medium 2 for heating the UV ink layer formed on the recording medium 2 can be determined as follows irrespective of the kinds, quality and thickness of the recording medium, thereby making it possible to further enhance the curing efficiency. Namely, it is desired that the peak temperature of the surface of recording medium 2 is increased by at least about 90°C higher than the initial temperature (the initial temperature of the recording medium that has been preliminarily heated by the recording medium temperature-controlling means 7).

[0030] The recording medium temperature-controlling means 7 may be disposed on any side of the transferring means 3, i.e. below or over the transferring means 3, and may be of stationary type or mobile type. Further, the recording medium temperature-controlling means 7 may be of contact type or non-contact type. One example of the non-contact type inkjet recording apparatus is schematically shown in FIG. 2. In the inkjet recording apparatus shown in FIG. 2, the non-contact type recording medium temperature-controlling means 7 is disposed over the transferring means 3.

[0031] If the recording medium 2 is to be preliminarily heated, the recording medium temperature-controlling means 7 may not necessarily be installed in the inkjet recording apparatus 1. For example, as shown in FIG. 3, a recording medium preliminary heating stocker 14 can be disposed at a fore-stage of the transferring means 3 of the inkjet recording apparatus 1. The recording medium 2 placed inside the recording medium preliminary heating stocker 14 is collectively and preliminarily heated up to a predetermined temperature by the heating means (not shown) mounted in the recording medium preliminary heating stocker 14 and then transferred by the transferring means 3. This method is effective in the case where the recording medium has a large heat capacity and the surface temperature cannot be instantaneously lowered. In particular, this method is especially effective in the case where the recording is performed on the recording medium 2 made of a metal of high density or high specific gravity or made of a bulky material which is large in thickness for example.

[0032] In either cases, by using the recording medium temperature-controlling means 7, the recording medium 2 to be transferred by the transferring means 3 is preliminarily heated and then further heated up to a predetermined temperature until the recording medium 2 reaches the recording head 4. Further, due to the preliminary heating of the recording medium 2, it is possible to obtain the effect of promoting the heating by the heating means 6 to the ink layer formed on the recording medium 2.

[0033] As for the recording medium temperature-controlling means 7, it is possible to employ an infrared lamp, a halogen heater, a far-infrared ceramic heater, a roller provided therein with a heating element (heat roller), an IH heater, a blower for blowing out hot air or heated air, etc. When the recording medium 2 is made of metal and a non-contact type heating means as shown in FIG. 2 is to be employed, it is preferable to employ a far-infrared ceramic heater. Further, if it is required to employ a high-speed printing apparatus where the printing speed thereof is as high as several tens of meters per minute or if the surface temperature of recording medium is required to be instantaneously increased up to

a high temperature, the recording medium temperature-controlling means 7 in the non-contact type heating means shown in FIG. 2 should be constructed such that it can be instantaneously heated up. More specifically, the employment of a converging halogen heater is more effective in this case. FIG. 4 shows a cross-sectional view of one example of halogen heater which is useful in this case. As shown in FIG. 4, the halogen heater 22 is encircled by a reflection plate 23 and placed inside the housing 21. A focal point 24 is located at a predetermined point below the halogen heater 22, thereby enabling the light to converge at this point. Therefore, it is desired to set the halogen heater at a suitable location so as to enable the recording medium 2 to pass through this focal point 24.

[0034] Next, the method of performing printing (the formation of images) on the recording medium 2 by using the inkjet recording apparatus 1 shown in FIG. 1 will be explained in detail.

[0035] First of all, by using the transferring means 3, the recording medium 2 is transferred from the right side to the left side in the drawing. The speed of transferring the recording medium 2 can be suitably selected depending on the object of use. For example, the transferring speed can be controlled in the order of several tens meters per minute. As the recording medium 2 is being transferred, the recording medium 2 is preliminarily heated by the recording medium temperature-controlling means 7 disposed below the transferring means 3. The region in which the recording medium 2 is preliminarily heated by the recording medium temperature-controlling means 7 may be limited to the vicinity of the location where printing images are to be formed by the recording head 4 as shown in FIG. 1. Alternatively, the region in which the recording medium 2 is preliminarily heated may be limited to the vicinity of the location just before the heating means 6 where the recording medium 2 can be irradiated with electromagnetic radiation such as ultraviolet rays (the irradiation of light) by the light-irradiating means 5 as shown in FIG. 5.

[0036] A specific region for performing the preliminary heating can be suitably set by taking various factors into consideration such as the curing sensitivity of the electromagnetic radiation-curing type liquid composition or the UV ink, the transferring speed of the printing surface (the transferring speed of the recording medium 2), the kinds (the quality of material, thickness, etc.) of the recording medium 2, etc. However, it is required that the temperature of the recording medium 2 at the moment when the recording medium 2 has reached the recording head 4 is higher than the temperature of the ink being delivered from the recording head 4. The temperature of the ink to be delivered generally confined to the range of about 20 to 60°C, so that if the temperature of the recording medium 2 is the same with or lower than this range of temperature, it would be impossible to effectively cure the ink layer. Therefore, the optimal conditions for the irradiation of electromagnetic radiation (the irradiation of light) which are required for the curing of ink would be confined to a narrow range.

[0037] The temperature for the preliminary heating of the recording medium 2 to be transferred may be such that would not interfere with the effects to be derived from the heating by the heating means 6 as described hereinafter. Further, this temperature should preferably be as high as possible as long as it does not cause the deformation of the recording medium 2. It is also required that the heat emitted from the light-irradiating means can be effectively applied to the ink without being taken away, for example, by the transferring means of recording medium. It is preferable that the acid which is required for curing is sufficiently diffused into a deep portion of the ink layer and the recording medium 2 is preliminarily heated up to a temperature which makes it possible to perform uniform curing of ink prior to the irradiation of electromagnetic radiation (the irradiation of light). Therefore, the preliminarily heating of the recording medium 2 is performed to such an extent that the heating thereof is no longer required after the irradiation of light and that the uniform curing of the ink layer through the diffusion of the acid required for curing into a deep portion of ink layer can be effectively exhibited. Actually, it is desirable to perform a preliminary experiment for the assessment of the curing characteristics of ink, thereby determining the conditions for the preliminary heating of the recording layer. More specifically, the preliminary heating can be performed at a temperature ranging from 35 to 120°C, more preferably from 50 to 70°C though it depends on the composition of ink, the temperature of ink, the quality of material of the recording medium, etc.

[0038] At the moment when the recording medium 2 is transferred to the front of recording head 4, an electromagnetic radiation-curing type UV ink is delivered from the recording head 4 in conformity with the signals of images. As a result, an ink layer can be formed on the recording medium 2.

[0039] The recording medium 2 having the ink layer formed thereon is transferred to the front of the light-irradiating means 5. As the recording medium 2 is being permitted to pass through the front of the light-irradiating means 5, light is irradiated onto the ink layer from the light-irradiating means 5 to generate an acid in the ink layer. The intensity of the radiation at the location of the surface of ink layer may be generally confined within the range of several mW/cm^2 to 10 W/cm^2, though it differs depending on the wavelength of light source to be employed. Preferably, the intensity of the radiation may be confined within the range of several tens of mW/cm^2 to 5 W/cm^2 or so. The quantity of exposure to be applied to the ink layer can be optionally set in conformity with the sensitivity of ink as well as with the moving speed of printing surface (the transferring speed of the recording medium 2).

[0040] Then, the recording medium 2 is transferred into or in the vicinity of the heating means 6. As the recording medium 2 passes through the interior of the heating means 6 or passes in the vicinity of the heating means 6, the ink layer formed on the recording medium 2 is heated by the heating means 6 to promote the cross-linking reaction in the ink layer. Incidentally, in the case of the inkjet recording apparatus shown in FIG. 1, the heating time by the heating

means 6 is generally relatively short, i.e., ranging from less than one second to several tens of seconds. Therefore, if it is desired to enable the ink layer to be substantially completely cured by the heating means 6, the heating should preferably be performed in such a manner that the maximum ultimate temperature becomes relatively high, for example about 200°C or less, especially about 80 to 200°C. Alternatively, the heating may be performed with the maximum ultimate temperature being confined within the range of about 60 to 180°C.

[0041] The heating by the heating means 6 may be omitted through the optimization of the composition of ink, or the optimization of the aforementioned preliminary heating and of the irradiating conditions of electro-magnetic radiation. Thereafter, the recording medium 2 is transferred into the stocker (or a container) (not shown), thereby accomplishing the printing.

[0042] The heating means for heating the ink layer is not necessarily limited to the heating means 6 which is disposed on the downstream side of the light-irradiating means 5 as shown in FIG. 1. For example, it is possible to employ a stocker 15 provided with the heating means as shown in FIG. 6. A plurality of recording mediums 2 that have been subjected to exposure process can be accommodated in this stocker 15 provided with the heating means to perform the heating en bloc of these recording mediums 2. Alternatively, the light-irradiating means 5 may be moved close to the recording medium 2 to such an extent that would not cause any damage to the printing surface on the occasion of performing the exposure of the ink layer, thereby utilizing the light-irradiating means 5 as a heating source. It is also possible to utilize the light source as a heating source by not attaching any heat-removing mechanism such as a cold mirror to the light source. If a high-output bulb of several hundreds watts is to be employed, since the bulb is provided with a cooling mechanism in advance, it is possible to partially modify this cooling mechanism so as to make up a mechanism which makes it possible to intentionally utilize the heat of the bulb for the heating of the recording medium 2. By doing so, the ink layer can be heated by using the heat generated from the light-irradiating means 5.

[0043] More specifically, it is possible to employ the light-irradiating means 5 having an output of not less than one hundred watts and provided with a mechanism which is designed such that an air stream employed for cooling the light-irradiating means 5 is enabled to re-introduce into the recording medium 2 or into the transferring/holding mechanism, thereby making it possible to utilize the air stream for the heating of the ink layer. The ultimate temperature of the recording medium 2, which can be derived from the utilization of the heat from the light-irradiating means 5, may be such that makes it possible to obtain the same degree of effects as obtainable from the heating by the aforementioned heating means 6. Although a preferable range of temperature may differ depending on the period of heating time, the temperature should be at least 60°C or more in general, more preferably 80-100°C. Further, when the velocity of exposure is as high as several meters per second, the temperature may be as high as 180°C or so, since the ink layer is required to be instantaneously heated.

[0044] When, for example, a light-irradiating means which is capable of emitting infrared ray in addition to the visible light is employed as the light-irradiating means 5, it is possible to perform the heating concurrently with the irradiation of light. In this case, the curing of the ink layer can be preferably promoted.

[0045] Incidentally, if the electromagnetic radiation-curing type UV ink to be delivered from the recording head 4 contains a very small quantity of coloring component, it can be deemed as being an electromagnetic radiation-curing type liquid composition excellent in transparency. Therefore, the electromagnetic radiation such as ultraviolet rays to be irradiated from the light-irradiating means 5 (irradiated light) would be enabled to easily reach a deep portion of the liquid composition. As a result, it is possible to reduce the irradiating output of the light-irradiating means 5. Further, it is possible to lower the temperature (output: quantity of heat required) of the heating means 6, thus leading to the miniaturization of heating means 6. Furthermore, depending on the conditions, the layer of the liquid composition can be sufficiently cured by the radiant heat to be emitted, concurrently with the light, from the light-irradiating means 5 in addition to the preliminary heating thereof by the recording medium temperature-controlling means 7. In this case, the heating of the layer of the liquid composition may not necessarily be performed after the irradiation of light and hence the heating means 6 as shown in FIG. 7 or FIG. 8 can be omitted. As a result, the inkjet recording apparatus 1 can be miniaturized.

[0046] If an electromagnetic radiation-curing type UV ink containing a coloring component is employed, the electromagnetic radiation to be irradiated from the light-irradiating means 5 can hardly penetrate into a deep portion of the liquid composition as compared with the aforementioned electromagnetic radiation-curing type liquid composition which is excellent in transparency. In the case where the layer of the liquid composition to be formed is relatively large in thickness, it would become more difficult to enable the light to reach a deep portion of the liquid composition, so that it would be required to study the quantity of the photo-acid generating agent to be included in the UV ink. In the case of the recording apparatus according to one embodiment of the present invention, the recording medium 2 is preliminarily heated by the recording medium temperature-controlling means 7, thereby allowing the acid required for the curing the ink layer to be sufficiently diffused into a deep portion of the ink layer. As a result, it is possible to lower the temperature (output: quantity of heat required) of the heating means 6, thus leading to the miniaturization of heating means 6. Furthermore, depending on the conditions, the layer of the electromagnetic radiation-curing type UV ink can be sufficiently cured by only the radiant heat to be emitted, concurrently with the light, from the light-irradiating means 5 in addition to the preliminary heating thereof by the recording medium temperature-controlling means 7. In this case, the heating of

the layer of the UV ink may not necessarily be performed after the irradiation of light and hence the heating means 6 as shown in FIG. 7 or FIG. 8 can be omitted as in the case of the electromagnetic radiation-curing type liquid composition excellent in transparency. In this case, as explained with reference to FIG. 7 or FIG. 8, the inkjet recording apparatus 1 can be miniaturized.

[0047] The inkjet recording apparatus 1 according to one embodiment of the present invention may be a flat bed type inkjet recording apparatus. One example thereof is schematically illustrated in FIG. 9. In the inkjet recording apparatus shown in FIG. 9, while the recording medium 2 is fixed, the inkjet recording head 4 and the light-irradiating means 5 are enabled to move to form an image. Below a recording medium-fixing stage, there is disposed the recording medium temperature-controlling means 7, by which the recording medium 2 is entirely subjected to preliminary heating to perform the formation of image.

[0048] This inkjet recording apparatus 1 comprises the inkjet recording head 4, the light-irradiating means 5, and the heating means 6, thereby constituting an inkjet recording unit. In the execution of printing, the recording head 4 is serially and reciprocatively moved over the recording medium 2 which is fixed to the recording medium-fixing stage.

[0049] This inkjet recording unit is fixed as one unit by a couple of guides 8 and 9 positioned on the opposite sides of the inkjet recording unit and is constructed such that it is placed on a couple of front and rear rails 10 and 11 which are disposed parallel to each other and that it is enabled to move reciprocatively in the directions indicated by the white arrow and the black arrow shown in the drawing. As for the method of moving the inkjet recording unit, it is possible to employ a wire which is attached, in a stretched state, to a stepping motor, etc. so as to enable the inkjet recording unit to be pulled by the wire. Alternatively, it is also possible to construct the inkjet recording unit just like a linear slider so as to enable the inkjet recording unit to move by itself.

[0050] The front and rear rails 10 and 11 are fixed in parallel and designed to be moved in the direction of the arrow along a couple of left and right rails 12 and 13 disposed parallel to each other, both being positioned respectively on the outer sides of the recording medium 2.

[0051] On the occasion of performing inkjet recording by using the inkjet recording apparatus which is constructed as described above, the inkjet recording unit is transferred in the direction of the white arrow as shown in the drawing, in the course of which images are formed on the recording medium 2. After finishing the formation of the images during this one-way transferring of the inkjet recording unit, the inkjet recording unit is moved in the direction of the black arrow along the left and right rails 12 and 13 disposed parallel to each other, thereby shifting the inkjet recording unit to an unrecorded portion of the recording medium 2 in the course of the backward movement of the inkjet recording unit in the direction indicated by the black arrow. Then, in the same manner as described above, the inkjet recording unit is transferred in the direction of the white arrow, in the course of which images are formed on the recording medium 2. These operations are repeated, thereby making it possible to form images on a large recording medium 2.

[0052] Even in the case of the aforementioned flat bed type inkjet recording apparatus, the recording medium 2 is preliminarily heated by the recording medium temperature-controlling means 7 in the same manner as in the case of the aforementioned inkjet recording apparatus, thereby making it possible to expect the effects of miniaturizing the heating means 6.

[0053] Next, the embodiment of the present invention will be explained in detail with reference to specific examples.

[0054] An electromagnetic radiation-curing type liquid composition and an electromagnetic radiation-curing type UV ink were prepared to investigate the curing properties thereof. In the preparation of these compositions, two kinds of epoxy compounds Ep1 and Ep2 both represented by the following chemical formulas were mixed together at a mixing ratio of 7:1 (weight ratio) to obtain an acid-polymerizable composition (epoxy composition) "a".

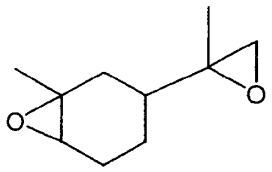

Ep1

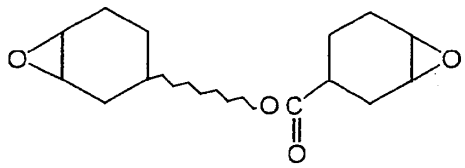

Ep2

Ep1: 1,2:8,9 diepoxylimonene;
Ep2: ε-caprolactone-modified 3,4-epoxycyclohexylmethyl 3',4'-epoxycyclohexane carboxylate.

[0055] Carbon black pigment employed as a coloring component (5% by weight) was mixed with acrylic resin and kneaded. This kneaded mixture and 200 ppm of nonionic surfactant (Sumitomo 3M Co., Ltd.) were added to the aforementioned epoxy composition "a". Thereafter, the resultant mixture was subjected to dispersion treatment a whole day and night by a paint shaker to obtain a black color composition "a(B)".

[0056] This black color composition "a(B)" was then mixed with a photo-acid generating agent at the ratios shown in the following Table 1 and stirred. The resultant mixture was then subjected to filtration using a 5 μm PTFE filter to prepare sample compositions (1) and (2). The sample composition (1) was an electromagnetic radiation-curing type liquid composition, while the sample composition (2) was an electromagnetic radiation-curing type UV ink (hereinafter referred to as UV ink).

Table 1

Composition No.	Black composition	Photo-acid generating agent (wt%)
1	None	PAG3(8%)
2	a(B)	PAG3(8%)

[0057] The PAG3 employed herein as a photo-acid generating agent was a propylene carbonate solution comprising, at a concentration of 50% by weight, a 1:1 mixture of the compounds PAG1 and PAG2 represented by the following chemical formulas. Further, this PAG3 was available in the market, the trademark thereof being UVACURE 1591 (Daicel UCB Co., Ltd.).

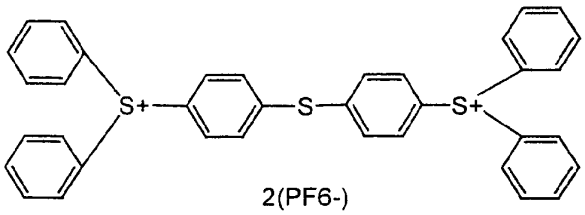

PAG 1

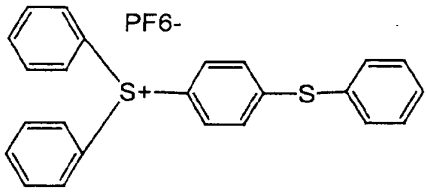

PAG 2

[0058] By using the inkjet recording apparatus 1 shown in FIG. 1, the printing was performed by using the sample compositions (1) and (2) and the curing properties thereof were investigated. The components of the inkjet recording apparatus 1 were respectively prepared as follows. As for the transferring means 3, a metallic endless belt excellent in heat resistance and low in heat capacity was employed and disposed in a tensioned manner between a driving roller and a follower roller. As for the recording head 4, an inkjet recording head CB1 (trademark; Toshiba TEC Co., Ltd.) was employed. As for the light-irradiating means 5, a UV irradiation system HP-6 (D bulb: peak wavelength=350-390 nm; Fusion UV Systems Japan Co., Ltd.) was employed. As for the heating means 6, a far-infrared ceramic heater PLC-33 series (Noritake Co., Ltd.) was employed. The recording medium temperature-controlling means 7 was constituted by a structure comprising a silicone rubber heater (OM Heater Co., Ltd.) which was stuck to a heat-resistive resin plate of low heat conductivity such as a POM plate, the recording medium temperature-controlling means 7 being disposed immediately below the transferring means 3 and along a region extending from the medium-feeding point to the location of the light-irradiating means 5.

[0059] All of the samples were printed under the following conditions.

Resolving power of recording head 4: 600 dpi;
Volume of delivered ink: 42 pL/each nozzle;
Printing speed (moving velocity of the belt employed as a recording medium transferring means): 25 m/min.;
Output of irradiation (large): 2600 mW/cm^2;
Output of irradiation (small): 1800 mW/cm^2;
Heating temperature (surface temp. of recording medium): 100°C (passing time: about 5 sec.)
Preliminary heating temperature: 60°C

[0060] The output of irradiation denotes the illuminance of ultraviolet rays, which was measured by using an ultraviolet ray dosimeter (an industrial UV checker of Topcon Corporation; UVR-T1). This illuminance was adjusted by using an output adjusting thumbscrew (volume) of a UV irradiation system HP6 (Fusion UV Systems Japan Co., Ltd.).

[0061] Under the conditions described above, each of the compositions was printed on a PET sheet (200 μm in thickness) employed as a recording medium and the hardness of the printed images after the curing thereof was also measured by pencil hardness testing method. The measurement of the curability (hardness) of the printed images was performed according to JIS K5600-5-4 (Mitsu-Bishi pencils 2B-2H were employed) and the hardness was judged based on the following four levels, i.e. A, B, C and D. The results obtained on the sample compositions (1) and (2) are respectively summarized in the following Tables 2 and 3.

A: H or more
B: F
C: B and HB
D: 2B

Table 2

		Irradiation output (large)		Irradiation Output (small)	
		Heating		Heating	
		Yes	No	Yes	No
Preliminary heating	No	A	B	B	C
	Yes	A	A	A	B

Table 3

		Irradiation output (large)		Irradiation Output (small)	
		Heating		Heating	
		Yes	No	Yes	No
Preliminary heating	No	B	D	C	D
	Yes	A	B	B	C

[0062] As shown in Table 2, in the case of the electro-magnetic radiation-curing type liquid composition, it was possible, through the preliminary heating of the liquid composition formed on the surface of recording medium, to effectively apply the heat emitted from the light-irradiating means to the ink while making it possible to prevent the heat from being taken away by the transferring means of the recording medium, etc. As a result, it was possible to enable the acid required for the curing of ink to sufficiently diffuse into a deep portion of the ink layer and to perform uniform curing of the ink layer, thus not necessitating the heating of the ink layer after the irradiation thereof.

[0063] In the case of the UV ink also, it was possible, through the preliminary heating of the UV ink, to effectively apply the heat from the heating means to the UV ink layer while making it possible to prevent the heat from being taken away by the transferring means of the recording medium, etc., as shown in Table 3. In this manner, it was possible to enable the acid required for the curing of ink to sufficiently diffuse into a deep portion of the ink layer and to perform uniform curing of the ink layer. As a result, it was possible to simplify or miniaturize the heating means to be employed subsequent to the irradiation of light or to decrease the output of the heating means. Under certain circumstances, the heating means to be employed subsequent to the irradiation of light may be omitted.

[0064] As described above, since the recording medium is preliminarily heated, thereby heating the layer of electro-magnetic radiation-curing type liquid composition, it is possible to utilize, to a maximum degree, the energy (ordinary, light and heat) to be emitted from the light-irradiating means for irradiating electromagnetic radiation as well as the heat to be derived from the heating means. Namely, the inkjet recording apparatus is only required to be provided with a small-scale preliminary heating means, thereby not necessitating the provision of a large-scale heating means, thus leading to the miniaturization of the apparatus. Further, the preliminary heating is effective in lowering the viscosity of the ink adhered onto the recording medium, thus enhancing the wettability of the ink to the recording medium, thereby enhancing the adhesion between the ink layer and the recording medium.

[0065] Further, a UV ink was prepared to investigate the curing properties thereof under various conditions.

[0066] In the preparation of the UV ink, the aforementioned epoxy compound Ep1 (1,2:8,9 diepoxylimonene) and an epoxy compound Ep3 represented by the following chemical formula (neopentylglycol diglycidyl ether) were mixed together at a mixing ratio of 1:1 (weight ratio) to obtain an acid-polymerizable composition (epoxy composition) "b". Incidentally, the epoxy compound Ep1 was formed of Celloxide 3000 (Daicel Chemicals Co., Ltd.) and the epoxy compound Ep3 was formed of SR-NPG (Sakamoto Yakuhin Co., Ltd.).

Ep3

[0067] Carbon black pigment employed as a coloring component (4% by weight) was mixed with acrylic resin and kneaded. This kneaded mixture and 200 ppm of nonionic surfactant (Sumitomo 3M Co., Ltd.) were added to the aforementioned epoxy composition "b". Thereafter, the resultant mixture was subjected to dispersion treatment a whole day and night by a paint shaker to obtain a black color composition "b(B)".

[0068] This black color composition "a(B)" was then mixed with a photo-acid generating agent at the ratios shown in the following Table 4 and stirred. The resultant mixture was then subjected to filtration using a 5 μm PTFE filter to prepare sample composition (3). The sample composition (3) was a UV ink.

Table 4

Composition No.	Black composition	Photo-acid generating agent (wt%)
3	b(B)	PAG6(10%)

[0069] The PAG6 employed herein as a photo-acid generating agent was a propylene carbonate solution comprising, at a concentration of 50% by weight, a 1:1 mixture of the compounds PAG4 and PAG5 represented by the following chemical formulas. Further, this PAG6 was available on the market, the trademark thereof being ESACURE 1064 (Lamberty Co., Ltd.).

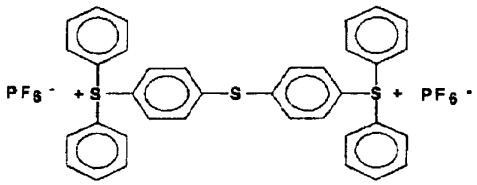

PAG4

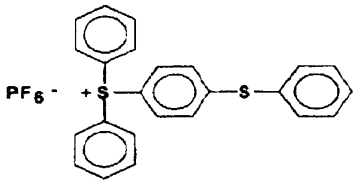

PAG5

[0070] By using the inkjet recording apparatus 1 shown in FIG. 1, the printing was performed by using the sample composition (3) and the curing properties thereof were investigated. The components of the inkjet recording apparatus 1 were respectively prepared as follows. As for the transferring means 3, a metallic endless belt excellent in heat resistance and low in heat capacity was employed and disposed in a tensioned manner between a driving roller and a follower roller. This transferring means 3 was constructed such that the recording medium 2 could be secured to a surface portion of the driving roller only when the printing was performed on the recording medium 2. As for the recording head 4, an inkjet recording head CB1 (trademark; Toshiba TEC Co., Ltd.) was employed. As for the light-irradiating means 5, a converging type UV irradiation system LP-6 (D bulb: peak wavelength=350-390 nm, standard reflection mirror; Fusion UV Systems Japan Co., Ltd.) was employed and positioned at a location which was spaced away from the recording head 4 by a distance of about 417 mm in the transferring direction.

[0071] As for the heating means 6, a halogen heater unit NIL series (gold-plated converging mirror surface; Infridge Industries Co., Ltd.) was employed. A single or a plurality of heating means 6 were disposed at a location which was spaced away from the light-irradiating means 5 by a distance of about 417 mm in the transferring direction. The heating means employed herein was a halogen heater as shown in cross-section in FIG. 4 and was disposed so as to enable the light to converge at the focal point 24 which was located 25 mm below this heating means. The recording medium temperature-controlling means 7 was constituted by a structure comprising a silicone rubber heater (OM Heater Co., Ltd.) which was stuck to a heat-resistive resin plate of low heat conductivity such as a POM plate, the recording medium temperature-controlling means 7 being disposed immediately below the transferring means 3 and along a region extending from the medium-feeding point to the location of the light-irradiating means 5, thereby making it possible to preliminarily heat the recording medium 2.

[0072] As for the recording medium temperature-controlling means 7, it may not necessarily be constructed as described above, but may be of non-contact type utilizing radiant heat or of a hot air-blowing type. Such a non-contact type recording medium temperature-controlling means may be formed of a halogen heater unit NIL series (gold-plated converging mirror surface; Infridge Industries Co., Ltd.) employing the heating means 6. If the recording medium 2 is formed of a metal such as iron, a self-exothermal heater utilizing, for example, electromagnetic induction heating may be employed as a recording medium temperature-controlling means.

[0073] The printing conditions (conditions for forming a cured ink film) in this example were as follows.

Resolving power of recording head 4: 600 dpi;
Volume of delivered ink: 42 pL/each nozzle;
Ink delivery temperature from recording head 4: about 40°C;
Printing speed (transferring velocity of the recording medium by recording medium-transferring means 3): 25 m/min.

[0074] As for the light-irradiating means 5, ultraviolet ray having a peak at a wavelength of around 365 nm was employed and the output thereof was suitably altered within the following ranges.

Illuminance of irradiation: 263-2429 mW/cm^2;
Integrated quantity of light: 4-236 mJ/cm^2.

[0075] The heating conditions by the heating means 6 were set in such a manner that the heater output per 1 cm in the longitudinal direction of halogen lamp was suitably changed within the range of 0.117-0.936 KW/cm.

[0076] By using the inkjet recording apparatus 1 constructed as described above and the sample composition (3), a cured solid image was formed on a stainless metal plate (100 μm in thickness). In this printing, the recording medium 2 was transferred at a velocity of 25 m/min and conditions such as the illuminance of irradiation and the quantity of light in the operation of the light-irradiating means 5 and the heater output of the heating means 6 were variously changed.

[0077] The irradiation output (illuminance of ultraviolet rays/integrated quantity of light) of the light-irradiating means 5 was a value which was measured by using an ultraviolet ray dosimeter (an industrial UV checker of Topcon Corporation; UVR-T1, light-detecting portion: UD-T36; peak sensitive wavelength: about 350 nm). Further, the output of the irradiation of light was adjusted within the range of 25-100 % by using an output adjusting thumbscrew of the aforementioned UV irradiation system.

[0078] The curing property of the cured material on the recording medium 2 was investigated respectively on the case where the preliminary heating of the recording medium 2 by the recording medium temperature-controlling means 7 of the inkjet recording apparatus was not performed (temperature of the recording medium 2: about 30°C) and on the case where the aforementioned preliminary heating of the recording medium 2 was performed (temperature of the recording medium 2: about 50°C). For the assessment of the curing property, the tack-free property and pencil hardness were measured.

[0079] Tack-free property herein means the probabilities of the retro-transcription of ink onto the rear surface of the recording medium 2 that has been superimposed on another recording medium 2 when a plurality of recording mediums 2 each bearing printed images thereon are piled on one another. Thus, tack-free means the case wherein even if a plurality of recording mediums 2 each bearing printed images thereon were piled on one another, there is no possibility that the ink formed on the surface of one of the recording mediums 2 can be transcribed onto the rear surface of overlying recording medium 2. More specifically, the tack-free property of cured ink film can be determined by subjecting the cured ink film formed on the recording medium 2 to rubbing several times by using a paper wiper (Chymwipe; Cresia Co., Ltd.). The tack-free property of cured ink film was assessed based on the following criteria.

O: Tack-free (even if the cured ink film was rubbed five times with the employment of Chymwipe, the ink was not scraped off)
Δ: Somewhat tack-free (when the cured ink film was rubbed five times with the employment of Chymwipe, the adhesion of the ink to the Chymwipe was admitted)
X: Not tack-free (when the cured ink film was rubbed once with the employment of Chymwipe, the adhesion of the ink to the Chymwipe was admitted; i.e. not sufficiently cured)

[0080] Namely, if the ink layer is tack-free, it can be determined that the UV ink layer on the recording medium 2 has been substantially completely cured.

[0081] The measurement of the pencil hardness of the printed image was performed according to JIS K5600-5-4 (Mitsu-Bishi pencils 2B-2H were employed). In the combination of the UV ink employed in this example with the recording medium 2 (stainless metal plate), the pencil hardness of the printed image is required to be "H" or more.

[0082] Table 5 shows the results of samples on which the preliminary heating was not performed and Table 6 shows the results of samples on which the preliminary heating was performed. The upper line of each column denotes the tack-free property of the cured ink film, and the lower line of each column denotes the pencil hardness of the cured ink film. When the tack-free property was "O" and the pencil hardness was "H" or more in the determination of curing conditions, it can be said as being an appropriate range of curing conditions.

Table 5

Illuminance (mW/cm^2)	Quantity of light (mJ/cm^2)	Output of heater (kW/cm)									
		0.117	0.146	0.195	0.234	0.293	0.390	0.468	0.585	0.702	0.936
263	4	× <2B	× <2B	× <2B	× <2B	× <2B	× <2B	× <2B	× <2B	× <2B	× <2B
572	37	× <2B	× <2B	× <2B	× <2B	× <2B	× <2B	× <2B	× <2B	× <2B	× <2B
881	70	△ 2B	△ 2B	△ 2B	△ 2B	△ 2B	△ B	△ HB	△ HB	△ HB	△ HB
1191	104	△ 2B	△ 2B	△ 2B	△ 2B	△ 2B	△ B	△ HB	△ HB	△ F	△ HB
1500	137	△ 2B	△ 2B	△ 2B	△ 2B	△ 2B	△ HB	△ F	△ F	△ HB	△ F
1810	170	△ B	△ B	△ B	△ B	△ HB	△ F	△ F	△ F	△ F	△ F
2119	203	△ B	△ B	○ HB	○ HB	○ HB	○ F	○ H	○ H	○ H	○ H
2429	236	△ B	△ HB	○ F	○ F	○ F	○ F	○ H	○ H	○ H	○ H

Table 6

Illuminance (mW/cm^2)	Quantity of light (mJ/cm^2)	Output of heater (kW/cm)									
		0.117	0.146	0.195	0.234	0.293	0.351	0.468	0.585	0.702	0.936
263	4	× <2B	× <2B	× <2B	× <2B	× <2B	× <2B	× <2B	× <2B	× <2B	× <2B
572	37	× <2B	× <2B	× <2B	× B	× B	× B	× B	× B	× B	× B
881	70	△ 2B	△ 2B	△ HB	△ F	△ F	△ F	△ F	△ F	△ F	△ F
1191	104	△ HB	△ F	△ F	○ H	○ H	○ H	○ H	○ H	○ H	○ H
1500	137	△ F	○ F	○ H	○ H	○ H	○ H	○ H	○ H	○ H	○ H
1810	170	○ F	○ F	○ H	○ H	○ H	○ H	○ H	○ H	○ H	○ H
2119	203	○ F	○ F	○ H	○ H	○ H	○ H	○ H	○ H	○ H	○ H
2429	236	○ F	○ H	○ H	○ H	○ H	○ H	○ H	○ H	○ H	○ H

[0083] As shown in Table 5, if the recording medium 2 is not subjected to preliminary heating, it is required, in order to secure a tack-free property of: "O", that the illuminance and the quantity of light of the light-irradiating means 5 is set

to not less than 2119 mW/cm^2 and not less than 203 mJ/cm^2, respectively, and the heater output of the heating means 6 is set to 0.195 KW/cm or more. Further, in order to secure the pencil hardness of "H" or more, it is required that the illuminance and the quantity of light of the light-irradiating means 5 is set to not less than 2119 mW/cm^2 and not less than 203 mJ/cm^2, respectively, and the heater output of the heating means 6 is set to 0.468 KW/cm or more. Thus, if the recording medium 2 is not subjected to preliminary heating, the appropriate conditions for obtaining excellently cured substance would be confined to a narrow range.

[0084] Whereas, if the recording medium 2 is subjected to preliminary heating at a temperature ranging from 35 to 120°C, it would be possible to greatly expand the aforementioned range of appropriate conditions as shown in FIG. 6. Namely, if it is desired to secure a tack-free property of: "O", it is only required that the illuminance and the quantity of light of the light-irradiating means 5 is set to not less than 1191 mW/cm^2 and not less than 104 mJ/cm^2, respectively, and the heater output of the heating means 6 is set to 0.117 KW/cm or more. Further, if it is desired to secure the pencil hardness of "H" or more, it is only required that the heater output of the heating means 6 is set to 0.146 KW/cm or more.

[0085] As described above, it has been confirmed that when the surface temperature of the recording medium 2 is subjected to preliminary heating at a temperature of not lower than the temperature of the ink being delivered from the head 4, it is possible to greatly expand the appropriate conditions for curing as compared with the case where the recording medium 2 is not subjected to preliminary heating. In this example, the temperature (surface temperature) of the recording medium 2 was around 30°C, i.e., approximately the same as the normal temperature of the inkjet recording apparatus, and the temperature of the UV ink being delivered from the inkjet recording head 4 was about 40°C. As seen from the aforementioned results, it is possible to obtain sufficient effects by increasing the temperature (surface temperature) of the recording medium 2 by about 20°C, for example up to 50°C.

[0086] When it is compared with the conditions of irradiation being kept the same, even if the output of the heating means 6 is increased so as to make the peak temperature of the surface of recording medium 2 the same as each other, it would be impossible to expect any prominent effects. Namely, it is only possible, through the preliminary heating of the recording medium 2 so as to increase the surface temperature of recording medium 2 up to the same with or higher than the temperature of ink being delivered from the head 4, to promote the curing of ink. This cure-promoting effect can be realized even if the ultimate surface temperature of the recording medium 2 is the same.

[0087] As far as the illuminance and the quantity of light of the light-irradiating means 5 is set to not less than 1191 mW/cm^2 and not less than 104 mJ/cm^2, respectively, as the conditions for irradiation, it is possible to obtain the same cure-promoting effect as described above as long as the peak surface temperature of the recording medium 2 to be preliminarily heated by the recording medium temperature-controlling means 7 is confined within the range of 35 to 120°C. Although it would be more or less influenced by the temperature of the UV ink being delivered from the recording head 4, when the surface temperature of the recording medium 2 to be preliminarily heated by the recording medium temperature-controlling means 7 was made higher than the delivering temperature of the UV ink, it was possible to obtain excellent curing property as long as the temperature of preliminary heating was confined within the range of 35 to 120°C.

[0088] If the temperature of preliminary heating is lower than 35°C, it would be impossible to sufficiently obtain the effects of preliminary heating of the recording medium 2. On the other hand, if the temperature of preliminary heating is higher than 120°C, the recording medium 2, the UV ink and the inkjet recording apparatus 1 would be more likely damaged and, moreover, images to be formed on the recording medium 2 would be badly affected, generating an irregular image, etc. Further, the energy consumption of the apparatus to be employed for the preliminary heating would be increased, thus generating another problem.

[0089] If the temperature of the UV ink being delivered from the recording head 4 is about 40°C, it would be possible to obtain more excellent effects as far as the temperature of preliminary heating of the recording medium 2 by the recording medium temperature-controlling means 7 is confined within the range of 50 to 70°C. It has been confirmed that if the temperature of preliminary heating of the recording medium 2 by the recording medium temperature-controlling means 7 is confined within the range of about 50 to 70°C in view of preventing damage to the quality of the image and recording medium 2, it is possible to obtain more excellent curing properties of the UV ink layer formed on the recording medium 2.

[0090] It is also possible to expect the following effects through the preliminary heating of the recording medium 2. For example, if the temperature of the UV ink is 40°C, it is possible to lower the viscosity of the ink by preliminary heating the recording medium 2 up to the range of 50 to 70°C by the recording medium temperature-controlling means 7. When the viscosity of the ink is lowered to 20 mPa·s(cp) or less for example, the acid generated in the ink layer would be more effectively diffused, leading to the enhancement of curability of the ink layer. Furthermore, it is possible, through the lowering of viscosity of the ink, to enhance the wettability thereof with the surface of recording medium 2 and to enhance the adhesion between the cured layer and the surface of recording medium 2.

[0091] A total quantity of heat required for increasing the temperature of the UV ink or the recording medium 2 for securing the tack-free property "O" can be determined as follows. Namely, a PET sheet having a thickness of 100 μm is required to be increased in temperature from the initial temperature to a high temperature which is required at least

for the curing thereof by using entire heating sources including the preliminary heating by the recording medium temperature-controlling means 7, the heating by the light-irradiating means 5 and heating by the heating means 6. Herein, the initial temperature of the PET sheet is 50°C or so, and the temperature which is required at least for the curing thereof is 90°C or so.

[0092] The material of the recording medium indirectly employed for the measurement of the surface temperature in the aforementioned example was PET, so that if the specific gravity (m) is assumed as being 1.3, and specific heat (c) is assumed as being 1.3 (J/g°C), the quantity of heat Q required for raising the temperature thereof by about 40°C (90-50°C) per 1 g of PET can be calculated as follows based on Q = mct.

$$Q = 1.3 \times 1.3 \times 40 = 67.6 \text{ J}$$

[0093] If the thickness of the PET sheet is 100 μm, a required quantity of heat Q' per 1 cm^2 of the sheet can be represented by Q' = 0.676 (J/cm^2). Therefore, the minimum conditions required for the curing of the UV ink film on the recording medium 2 would be at least 1000 mW/cm^2 or so in illuminance, at least 100 mJ/cm^2 or so in quantity of light, and at least 0.676 J/cm^2 or so in quantity of heat.

[0094] However, if the thickness of the recording medium 2 is larger than 1 mm, a far large quantity of heat would be required for raising the temperature of the recording medium since the heat which is required for the curing of the ink film on the recording medium would diffuse in the direction of the thickness of the recording medium. Namely, it would be required to supply the ink film with a sufficient quantity of heat which is necessary for increasing the temperature of ink film from the initial temperature of the recording medium 2 (about 50°C) to the temperature (about 90°C) which is at least required for the curing thereof by using entire heating sources including the preliminary heating by the recording medium temperature-controlling means 7, the heating by the light-irradiating means 5 and heating by the heating means 6.

[0095] Further, the curing process of the UV ink according to this embodiment of the present invention depends largely on the chemically amplification mechanism of the ink. Namely, at first, when the ink is irradiated with electromagnetic radiation such as ultraviolet rays (irradiation of light), an acid is generated from the photo-acid generating agent in the UV ink and this acid then diffuse into the ink layer due to the heating of the ink layer, thus acting the acid as a catalyst for the cross-linking reaction of the ink layer. Due to this diffusion of the acid, it is now possible to enable the acid to penetrate even into the deep region of the ink layer to which the light is incapable of being transmitted due to the obstruction by the coloring materials for example, thus making it possible to promote the curing throughout an extensive region of the ink layer.

[0096] If a UV ink which is high in viscosity is to be employed, the UV ink is generally heated in the inkjet recording head 4 to lower the viscosity thereof in order to make the viscosity thereof optimal for the delivery thereof, thus adjusting the viscosity of the UV ink to an optimal viscosity. When the UV ink thus heated in the inkjet recording head 4 is ejected to reach the surface of the recording medium 2 which is lower in temperature than the UV ink, the UV ink is cooled, thereby increasing the viscosity of the UV ink. Therefore, even if the acid is subsequently generated from the photo-acid generating agent by the irradiation of electromagnetic radiation (irradiation of light), the acid is prevented from effectively diffusing into the ink layer. As a result, the curing efficiency of the ink layer is degraded, thus necessitating a large quantity of heat for the re-diffusion of the acid through the subsequent heating.

[0097] Therefore, it is desired that a maximum ultimate temperature of the surface of the recording medium on the occasion of heating the recording medium in the heating step after the irradiation of electromagnetic radiation to the layer of UV ink is higher than a maximum ultimate temperature of the surface the recording medium on the occasion of irradiating the electromagnetic radiation to the ink layer. In this case, the acid that has been generated from the photo-acid generating agent by the irradiation of light can be more effectively diffused, thus making it possible to further enhance the curing efficiency of the UV ink layer. The method according to this embodiment of the present invention makes it possible to realize the aforementioned effects through the preliminary heating of the recording medium.

[0098] According to one aspect of the present invention, there is provided a method of effectively curing an electromagnetic radiation-curing type liquid composition comprising a solvent which is polymerizable in the presence of an acid, and a photo-acid generating agent which is dissolved in the solvent and capable of generating the acid as it is irradiated with electromagnetic radiation.

[0099] According to another aspect of the present invention, there is provided an apparatus which is capable of discharging an electromagnetic radiation-curing type liquid composition by an inkjet so as to effectively perform recording, wherein the ink composition comprises a solvent which is polymerizable in the presence of an acid, and a photo-acid generating agent which is dissolved in the solvent and capable of generating the acid as it is irradiated with electromagnetic radiation.

[0100] It is explicitly stated that all features disclosed in the description and/or the claims are intended to be disclosed separately and independently from each other for the purpose of original disclosure as well as for the purpose of restricting

the claimed invention independent of the composition of the features in the embodiments and/or the claims. It is explicitly stated that all value ranges or indications of groups of entities disclose every possible intermediate value or intermediate entity for the purpose of original disclosure as well as for the purpose of restricting the claimed invention, in particular as limits of value ranges.

Claims

1. A method of curing an electromagnetic radiation-curing type liquid composition comprising a solvent which is polymerizable in the presence of an acid, and a photo-acid generating agent which is dissolved in the solvent and capable of generating the acid as it is irradiated with electromagnetic radiation, the method **characterized by** comprising:

   forming a layer of the electromagnetic radiation-curing type liquid composition on a recording medium; and
   irradiating electromagnetic radiation including a wavelength which can be absorbed by the photo-acid generating agent onto the layer of the electromagnetic radiation-curing type liquid composition to generate the acid from the photo-acid generating agent, thereby curing the layer of the electromagnetic radiation-curing type liquid composition;
   wherein the recording medium is heated on the occasion of forming the layer of the electromagnetic radiation-curing type liquid composition in such a manner that the temperature of the recording medium is increased higher than the temperature of the electro-magnetic radiation-curing type liquid composition being delivered onto the recording medium.

2. The method according to claim 1, **characterized in that** the electromagnetic radiation-curing type liquid composition additionally contains pigment as a coloring component.

3. The method according to claim 1 or 2, **characterized in that** a maximum ultimate temperature of the surface of the recording medium after the irradiation of electromagnetic radiation to the layer of the electro-magnetic radiation-curing type liquid composition is higher than a maximum ultimate temperature of the surface of the recording medium on the occasion of irradiating the layer of the electromagnetic radiation-curing type liquid composition with the electromagnetic radiation.

4. The method according to any one of claims 1 to 3, **characterized in that** heat is applied to the layer of the electro-magnetic radiation-curing type liquid composition formed on the recording medium, the heat being at least sufficient to cause a diffusion of the acid generated from the photo-acid generating agent included in the electromagnetic radiation-curing type liquid composition into the layer of the electromagnetic radiation-curing type liquid composition, thereby curing the layer of the electromagnetic radiation-curing type liquid composition.

5. The method according to any one of claims 1 to 4, **characterized in that** the heating of the recording medium is performed by using a non-contact type heating means

6. The method according to any one of claims 1 to 5, **characterized in that** the recording medium is formed of a metallic substance.

7. An inkjet recording apparatus **characterized by** comprising:

   a delivering means (4) delivering an electro-magnetic radiation-curing type liquid composition onto the recording medium by an inkjet recording head, the ink composition comprising a solvent which is polymerizable in the presence of an acid, and a photo-acid generating agent which is dissolved in the solvent and capable of generating the acid as it is irradiated with electromagnetic radiation;
   a transferring means (3) moving the recording medium and the inkjet recording head relative to each other;
   a heat source (7) heating the recording medium at least until the ink composition is delivered from the inkjet recording head; and
   an irradiation source (5) irradiating electromagnetic radiation including a wavelength that can be absorbed by the photo-acid generating agent to the electromagnetic radiation-curing type liquid composition that has been heated by the heat source.

8. The inkjet recording apparatus according to claim 7, **characterized in that** the electromagnetic radiation-curing

type liquid composition additionally contains pigment as a coloring component.

9. The inkjet recording apparatus according to claim 7 or 8, **characterized in that** a maximum ultimate temperature of the surface of the recording medium after the irradiation of electromagnetic radiation to the layer of the electro-magnetic radiation-curing type liquid composition is higher than a maximum ultimate temperature of the surface of the recording medium on the occasion of irradiating the layer of the electro-magnetic radiation-curing type liquid composition with the electromagnetic radiation.

10. The inkjet recording apparatus according to any one of claims 7 to 9, **characterized in that** the heat source applies heat to the layer of the electromagnetic radiation-curing type liquid composition formed on the recording medium, the heat being at least sufficient to cause a diffusion of the acid generated from the photo-acid generating agent included in the electromagnetic radiation-curing type liquid composition into the layer of the electromagnetic radiation-curing type liquid composition, thereby curing the layer of the electro-magnetic radiation-curing type liquid composition.

11. The inkjet recording apparatus according to any one of claims 7 to 10, **characterized in that** the heating of the recording medium is performed by using a non-contact type heating means.

12. The inkjet recording apparatus according to any one of claims 7 to 11, **characterized in that** the recording medium is formed of a metallic substance.

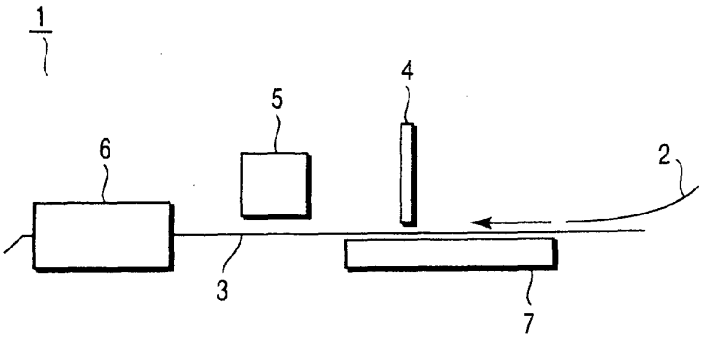

FIG. 1

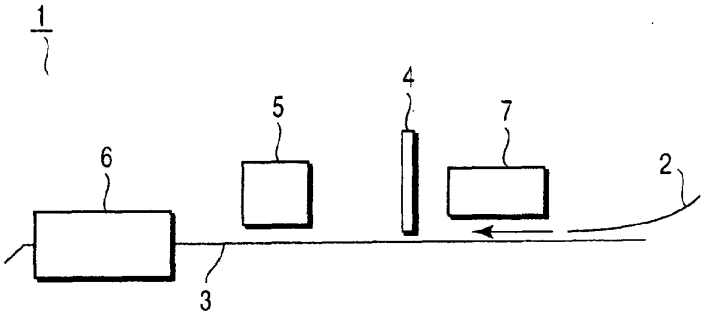

FIG. 2

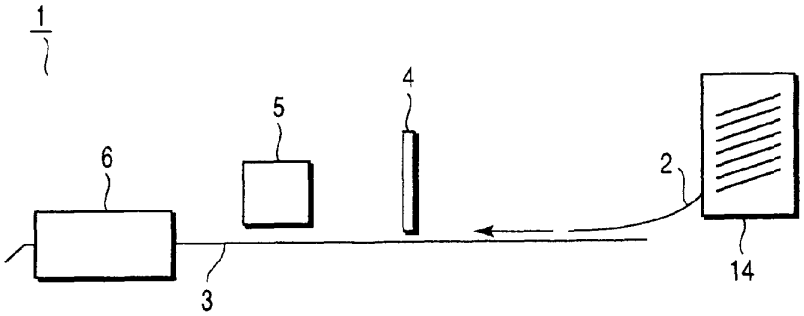

FIG. 3

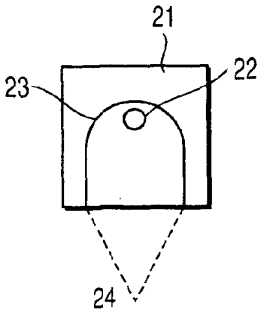

FIG. 4

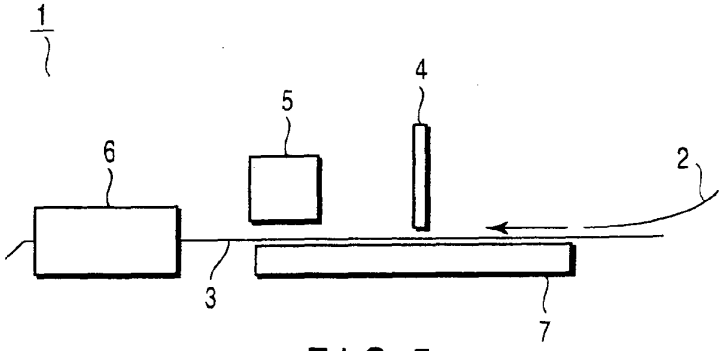

FIG. 5

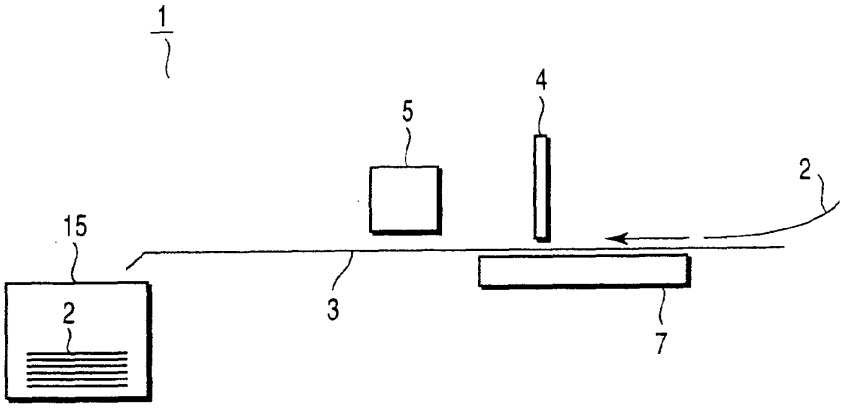

FIG. 6

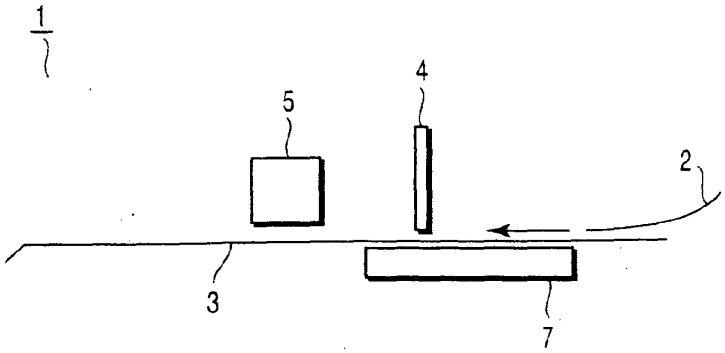

FIG. 7

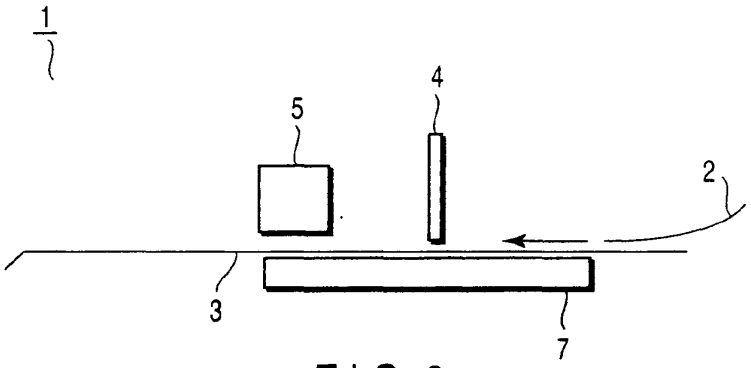

FIG. 8

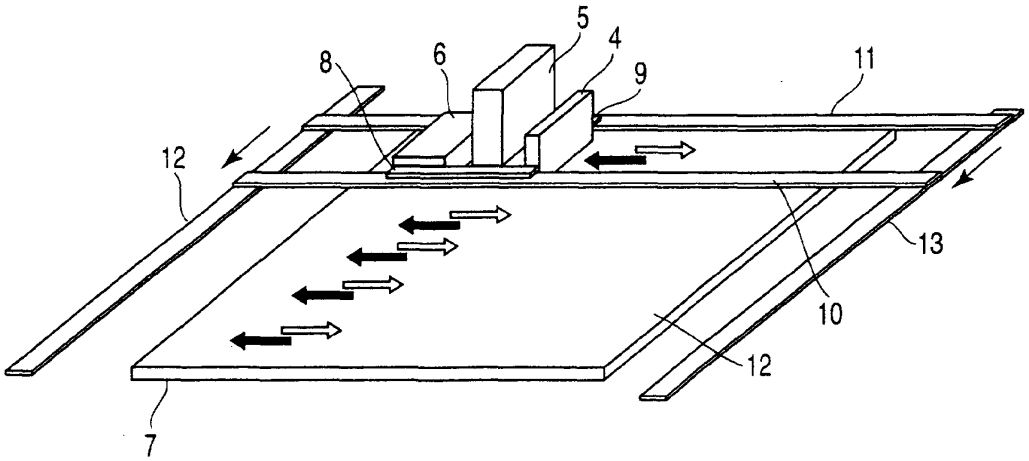

FIG. 9

European Patent Office

EUROPEAN SEARCH REPORT

Application Number
EP 05 01 4458

DOCUMENTS CONSIDERED TO BE RELEVANT

Category	Citation of document with indication, where appropriate, of relevant passages	Relevant to claim	CLASSIFICATION OF THE APPLICATION (Int.Cl.7)
X	EP 1 357 159 A (TOSHIBA TEC KABUSHIKI KAISHA; KABUSHIKI KAISHA TOSHIBA) 29 October 2003 (2003-10-29) * paragraph [0167]; claim 28 * -----	1-12	B05D3/02 B05D3/06
X	WO 02/078958 A (L & P PROPERTY MANAGEMENT COMPANY; CODOS, RICHARD, N; COLLAN, WILLIAM,) 10 October 2002 (2002-10-10) * page 6, lines 27-40 * * page 19, paragraph 2; figure 3 * -----	7-11	
X	PATENT ABSTRACTS OF JAPAN vol. 2002, no. 09, 4 September 2002 (2002-09-04) & JP 2002 137375 A (RISO KAGAKU CORP), 14 May 2002 (2002-05-14) * abstract * -----	1-12	

TECHNICAL FIELDS SEARCHED (Int.Cl.7)

B05D

The present search report has been drawn up for all claims

Place of search	Date of completion of the search	Examiner
Munich	23 September 2005	Connor, M

CATEGORY OF CITED DOCUMENTS

X : particularly relevant if taken alone
Y : particularly relevant if combined with another document of the same category
A : technological background
O : non-written disclosure
P : intermediate document

T : theory or principle underlying the invention
E : earlier patent document, but published on, or after the filing date
D : document cited in the application
L : document cited for other reasons

& : member of the same patent family, corresponding document

EPO FORM 1503 03.82 (P04C01)

ANNEX TO THE EUROPEAN SEARCH REPORT ON EUROPEAN PATENT APPLICATION NO. EP 05 01 4458

This annex lists the patent family members relating to the patent documents cited in the above-mentioned European search report.
The members are as contained in the European Patent Office EDP file on
The European Patent Office is in no way liable for these particulars which are merely given for the purpose of information.

23-09-2005

Patent document cited in search report	Publication date	Patent family member(s)	Publication date
EP 1357159 A	29-10-2003	CN 1453317 A	05-11-2003
		JP 2004002668 A	08-01-2004
		US 2003231234 A1	18-12-2003
WO 02078958 A	10-10-2002	CA 2442429 A1	10-10-2002
		EP 1381515 A1	21-01-2004
		JP 2004532750 T	28-10-2004
JP 2002137375 A	14-05-2002	NONE	

EPO FORM P0459

For more details about this annex : see Official Journal of the European Patent Office, No. 12/82

(19) Europäisches Patentamt
European Patent Office
Office européen des brevets

(11) EP 1 186 410 A2

(12) **EUROPEAN PATENT APPLICATION**

(43) Date of publication:
13.03.2002 Bulletin 2002/11

(51) Int Cl.7: **B41J 2/045**

(21) Application number: **01120767.7**

(22) Date of filing: **07.09.2001**

(84) Designated Contracting States:
AT BE CH CY DE DK ES FI FR GB GR IE IT LI LU MC NL PT SE TR
Designated Extension States:
AL LT LV MK RO SI

(30) Priority: **08.09.2000 JP 2000273749**
29.08.2001 JP 2001259216

(71) Applicant: **SEIKO EPSON CORPORATION**
Tokyo-to (JP)

(72) Inventor: **Chang, Junhua**
Suwa-shi, Nagano-ken (JP)

(74) Representative: **HOFFMANN - EITLE**
Patent- und Rechtsanwälte
Arabellastrasse 4
81925 München (DE)

(54) **Liquid jet apparatus and method for driving the same**

(57) A driving signal generation unit (83) generates a plurality of kinds of driving pulses and a minute vibration pulse to be applied to a pressure generation element (25) so as to finely vibrate a meniscus of liquid. A pulse generation unit (72,73,74,75) generates the minute vibration pulse and the driving pulses by selecting a part of the driving signal. The driving signal includes a plurality of waveform elements used to generate the driving pulses and a connection element used to connect the waveform elements between different voltage levels and not used to generate the driving pulses. The pulse generation unit generates the minute vibration pulse by a combination of at least a part of the waveform elements and at least a part of the connection element. A plurality of driving pulses for ejecting a plurality of kinds of ink drops and a minute vibration pulse for causing minute vibrations to a meniscus of liquid can be efficiently put in a driving signal of one driving period.

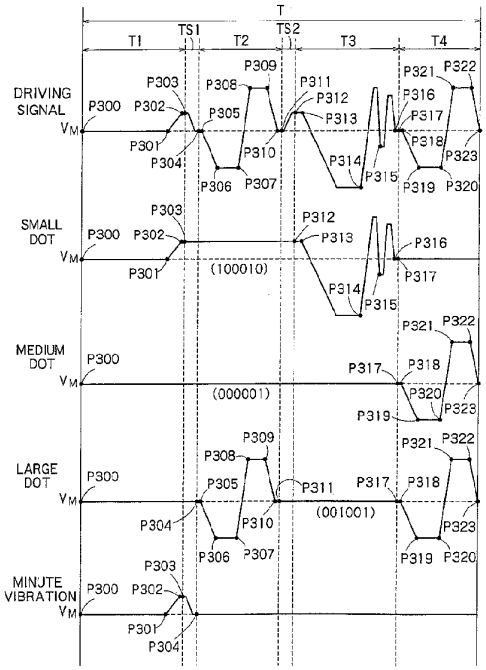

F I G. 4

EP 1 186 410 A2

Printed by Jouve, 75001 PARIS (FR)

Description

BACKGROUND OF THE INVENTION

Field of the Invention

[0001] The present invention relates to a liquid jet apparatus for ejecting liquid drops of a plurality of kinks different in volume from the same nozzle opening and a method for driving the same.

Description of the Related Art

[0002] An ink jet recorder which is an example of a liquid jet apparatus has a recording head having many nozzle openings formed in a row, a carriage mechanism for moving the recording head in the main scanning direction (the width direction of recording paper), and a paper feed mechanism for moving a recording paper in the sub-scanning direction (the paper feeding direction).

[0003] The recording head has a plurality of pressure chambers each interconnected to each of the nozzle openings and a plurality of pressure generation elements each for changing the ink pressure in each of the pressure chambers. In the recording head, a driving pulse is fed to the pressure generation element, thereby the ink pressure in the pressure chamber is changed, and then, an ink drop is ejected from the nozzle opening.

[0004] The carriage mechanism moves the recording head in the main scanning direction. During this movement, the recording head ejects ink drops in the timing specified dot pattern data. When the recording head reaches the terminal of the movement range, the paper feed mechanism moves the recording paper in the sub-scanning direction. When the movement of the recording paper is finished, the carriage mechanism moves the recording head in the main scanning direction again and the recording head ejects ink drops during movement.

[0005] By performing the aforementioned operation repeatedly, an image on the basis of the dot pattern data is recorded on the recording paper.

[0006] The recorder records an image depending on whether or not to eject ink drops, that is, existence of dots. Therefore, in this recorder, a method for representing the intermediate gradation by representing one pixel by a plurality of dots such as 4x4 and 8x8 is adopted. To record a high-quality image by this method, it is necessary to eject ink drops with an extremely small volume from the recording head.

[0007] With the foregoing in view, to satisfy conflicting requests of improvement of the image quality and improvement of the recording speed, an art for ejecting ink drops different in size from the same nozzle is proposed. For example, by supplying a plurality of pulse signals capable of generating minute ink drops, a plurality of minute ink drops are ejected from the same nozzle, and the respective ink drops are joined before reaching on the recording paper, and a large ink drop is generated.

[0008] However, in this art, the number of ink drops to be joined before reaching on the recording paper is limited, so that the size of ink drops is limited and the variable range of size is narrowed. Furthermore, since a plurality of ink drops must be joined before reaching on the recording paper, the control is inevitably difficult.

[0009] Therefore, an art for generating a driving signal connecting a plurality of kinds of driving pulses in series depending on the volume of ink drops to be ejected and supplying a driving pulse obtained from this driving signal to the pressure generation element can be considered.

[0010] However, in the aforementioned art, when a plurality of kinds of driving pulses are connected simply in series, the driving period (the period of the driving signal) necessary to record one dot becomes inevitably longer. Namely, in this art, it is necessary to connect driving pulses in correspondence to the number of the kinds of ink volumes to be ejected and the driving period becomes longer in correspondence to the number of connected driving pulses. And, when the driving period becomes longer, the recording speed becomes slower.

[0011] Further, at the nozzle openings of the recording head, the meniscus, that is, the free surface of ink exposed at the nozzle openings is exposed to the air, so that an ink solvent (for example, water) evaporates gradually. When the ink viscosity of ink at the nozzle openings rises due to evaporation of the ink solvent, a fault such as a splash of ejected ink drops in a direction shifted from the normal direction may be caused.

[0012] Therefore, in the ink jet recorder, ink is stirred by minute vibration of the meniscus and an increase in ink viscosity at the nozzle openings is prevented. At the time of stirring by the minute vibration, a minute vibration pulse is applied to the pressure generation element so as to cause a pressure change in the pressure chamber and the meniscus is slightly moved or vibrated in the ejection and pull-in directions.

[0013] However, when driving pulses for ejecting ink drops from the nozzle openings and a minute vibration pulse for generating minute vibration in the meniscus are simply connected in series so as to form the aforementioned driving signal, the time of one driving period becomes longer and the printing speed is reduced.

[0014] The present invention was developed with the foregoing in view and is intended to efficiently put a plurality of driving pulses for ejecting a plurality of kinds of ink drops different in ink volume and a minute vibration pulse for causing minute vibration to the meniscus in a driving signal of one driving period.

SUMMARY OF THE INVENTION

[0015] To solve the aforementioned problems, a liquid jet apparatus according to the present invention comprises: a pressure generation element installed in correspondence to a pressure chamber interconnected to a nozzle opening, said pressure generation element

adapted to be applied with a driving pulse thereby causing a pressure change to a liquid in said pressure chamber to eject a liquid drop from said nozzle opening; driving signal generation unit to generate a driving signal to be used for generating a plurality of kinds of said driving pulses for ejecting said liquid drop and a minute vibration pulse to be applied to said pressure generation element so as to finely vibrate a meniscus of said liquid; and pulse generation unit to generate said minute vibration pulse and said driving pulses by selecting a part of said driving signal, wherein said driving signal includes a plurality of waveform elements to be used to generate a plurality of kinds of said driving pulses and a connection element connecting said waveform elements between different voltage levels and not to be used to generate said driving pulses, and wherein said pulse generation means generates said minute vibration pulse by a combination of at least a part of said waveform elements and at least a part of said connection element.

[0016] Preferably, said driving pulses eject a plurality of kinds of said liquid drops different in volume, said driving pulse for ejecting said liquid drop of a smallest volume being generated by a combination of a plurality of said waveform elements, and said minute vibration pulse is generated by a combination of a part of a plurality of said waveform elements for ejecting said liquid drop of a smallest volume and at least a part of said connection element for connecting said part of a plurality of said waveform elements for ejecting said liquid drop of a smallest volume to another said waveform element.

[0017] Preferably, a part of said waveform elements for ejecting said liquid drop of a smallest volume is formed in a step shape, said connection element for connecting said part of a plurality of said waveform elements for ejecting said liquid drop of a smallest volume to another said waveform element is formed in a step shape, and

said minute vibration pulse is generated by a combination of a half of said waveform element of a step shape and a half of said connection element of a step shape.

[0018] Preferably, said connection element follows said part of a plurality of said waveform elements for ejecting said liquid drop of a smallest volume, and said connection element expands or contracts said pressure chamber in the same direction as said part of a plurality of said waveform elements for ejecting said liquid drop of a smallest volume does and then contracts or expands said pressure chamber in the opposite direction.

[0019] Preferably, said part of a plurality of said waveform elements used for generating said minute vibration pulse is a preparatory waveform element which contracts said pressure chamber of waiting condition without ejecting said liquid drop.

[0020] Preferably, a single pulse of said minute vibration pulse is generated in a single period of said driving signal.

[0021] Preferably, said minute vibration pulse is generated from said at least a part of said waveform elements and said at least a part of said connection element following said at least a part of said waveform elements.

[0022] Preferably, said plurality of waveform elements include ejection waveform elements for operating said pressure generation element so as to eject said liquid drops from said nozzle opening and charging waveform elements for operating said pressure generation element so as to charge said pressure chamber with said liquid, and said pulse generation means generates said plurality of kinds of said driving pulses depending on timing for selecting said ejection waveform elements and said charging waveform elements.

[0023] Preferably, said plurality of kinds of said driving pulses eject a plurality of kinds of said liquid drops different in volume, and said plurality of waveform elements include a pair of said ejection waveform elements for ejecting said liquid drop of a largest volume and said ejection waveform element, disposed between said pair of said ejection waveform elements, for ejecting said liquid drop of a smallest volume.

[0024] Preferably, said pressure generation element comprises a piezo-electric vibrator of a deflection vibration mode.

[0025] Preferably, said pressure generation element comprises a piezo-electric vibrator of a longitudinal vibration mode.

[0026] To solve the aforementioned problems, a method according to the present invention for driving a liquid jet apparatus with a pressure generation element installed in correspondence to a pressure chamber interconnected to a nozzle opening, said pressure generation element adapted to be applied with a driving pulse thereby causing a pressure change to a liquid in said pressure chamber to eject a liquid drop from said nozzle opening, comprises the steps of: generating a driving signal to be used for generating a plurality of kinds of said driving pulses for ejecting said liquid drop and a minute vibration pulse to be applied to said pressure generation element so as to finely vibrate a meniscus of said liquid; and

generating one of said minute vibration pulse and said driving pulses by selecting a part of said driving signal, wherein said driving signal includes a plurality of waveform elements to be used to generate a plurality of kinds of said driving pulses and a connection element connecting said waveform elements between different voltage levels and not to be used to generate said driving pulses, and wherein said minute vibration pulse is generated by a combination of at least a part of said waveform elements and at least a part of said connection element.

[0027] Preferably, said driving pulses eject a plurality of kinds of said liquid drops different in volume, said driving pulse for ejecting said liquid drop of a smallest volume being generated. by a combination of a plurality of said waveform elements, and said minute vibration

pulse is generated by a combination of a part of a plurality of said waveform elements for ejecting said liquid drop of a smallest volume and at least a part of said connection element for connecting said part of a plurality of said waveform elements for ejecting said liquid drop of a smallest volume to another said waveform element.

[0028] Preferably, a part of said waveform elements for ejecting said liquid drop of a smallest volume is formed in a step shape, said connection element for connecting said part of a plurality of said waveform elements for ejecting said liquid drop of a smallest volume to another said waveform element is formed in a step shape, and said minute vibration pulse is generated by a combination of a half of said waveform element of a step shape and a half of said connection element of a step shape.

[0029] Preferably, said connection element follows said part of a plurality of said waveform elements for ejecting said liquid drop of a smallest volume, and said connection element expands or contracts said pressure chamber in the same direction as said part of a plurality of waveform elements for ejecting said liquid drop of a smallest volume does and then contracts or expands said pressure chamber in the opposite direction.

[0030] Preferably, said part of a plurality of said waveform elements used for generating said minute vibration pulse is a preparatory waveform element which contracts said pressure chamber of waiting condition without ejecting said liquid drop.

[0031] Preferably, a single pulse of said minute vibration pulse is generated in a single period of said driving signal.

[0032] Preferably, said minute vibration pulse is generated from said at least a part of said waveform elements and said at least a part of said connection element following said at least a part of said waveform elements.

[0033] Preferably, said plurality of waveform elements include ejection waveform elements for operating said pressure generation element so as to eject said liquid drops from said nozzle opening and charging waveform elements for operating said pressure generation element so as to charge said pressure chamber with said liquid, and said pulse generation means generates said plurality of kinds of said driving pulses depending on timing for selecting said ejection waveform element and said charging waveform element.

[0034] Preferably, said plurality of kinds of said driving pulses eject a plurality of kinds of said liquid drops different in volume, and said plurality of waveform elements include a pair of said ejection waveform elements for ejecting said liquid drop in a largest volume and said ejection waveform element, disposed between said pair of said ejection waveform elements, for ejecting said liquid drop of a smallest volume.

[0035] Preferably, said pressure generation element comprises a piezo-electric vibrator of a deflection vibration mode.

[0036] Preferably, said pressure generation element comprises a piezo-electric vibrator of a longitudinal vibration mode.

BRIEF DESCRIPTION OF THE DRAWINGS

[0037] The present invention will be understood more fully from the detailed description given hereunder and from the accompanying drawings of the preferred embodiments of the invention. However, the drawings are not intended to imply limitations of the invention to a specific embodiment, but are for explanations and understandings only.

[0038] In the drawings:

Fig. 1 is a sectional view showing the structure of a recording head of an ink jet recorder as an embodiment of a liquid jet apparatus according to the present invention;

Fig. 2 is a block diagram of the ink jet recorder as the embodiment of the liquid jet apparatus according to the present invention;

Fig. 3 is a block diagram showing the essential section of a driving signal generation circuit of the ink jet recorder as the embodiment of the liquid jet apparatus according to the present invention;

Fig. 4 is a drawing showing a driving signal, various driving pulses, and a minute vibration pulse of the embodiment according to the present invention;

Fig. 5 is a drawing showing a driving signal, various driving pulses, and a minute vibration pulse of a first modification of the embodiment according to the present invention;

Fig. 6 is a drawing showing a driving signal, various driving pulses, and a minute vibration pulse of a second modification of the embodiment of the present invention;

Fig. 7 is a sectional view showing the structure of another recording head applicable to the present invention.

DETAILED DESCRIPTION OF THE PREFERRED EMBODIMENTS

[0039] An embodiment of the present invention will be explained hereunder with reference to the accompanying drawings.

[0040] Fig. 1 shows the structure of a recording head of an ink jet recorder as an embodiment of a liquid jet apparatus of the present invention. A recording head shown in Fig. 1 is a recording head 1 having piezo-electric vibrators 25 of a deflection vibration mode.

[0041] The recording head 1 has an actuator unit 32 in which a plurality of pressure chambers 31 are formed, a flow path unit 34 in which nozzle openings 13 and common ink chambers 33 are formed, and the piezo-electric vibrators 25. On the front of the actuator unit 32, the flow path unit 34 is joined and on the back of the actuator

unit 32, the piezo-electric vibrators 25 are arranged.

[0042] The pressure chambers 31 are expanded and contracted in correspondence to deformations of the piezo-electric vibrators 25 to change the ink pressure in the pressure chambers 31. Ink drops (liquid drops) are ejected from the nozzle openings 13 due to changes in the ink pressure in the pressure chambers 31. For example, when the pressure chamber 31 is contracted suddenly, the pressure chamber 31 is internally pressurized and an ink drop is ejected from the nozzle opening 13.

[0043] The actuator unit 32 is composed of a pressure chamber forming substrate 35 in which air spaces for forming the pressure chambers 31 are formed, a cover member 36 joined on the front of the pressure chamber forming substrate 35, and a diaphragm 37 joined on the back of the pressure chamber forming substrate 35 so as to block the opening surfaces of the air spaces. In the cover member 36, first ink flow paths 38 for interconnecting the common ink chambers 33 and the pressure chambers 31 and second ink flow paths 39 for interconnecting the pressure chambers 31 and the nozzle openings 13 are formed.

[0044] The flow path unit 34 is composed of an ink chamber forming substrate 41 in which air spaces for forming the common ink chambers 33 are formed, a nozzle plate 42 joined on the front of the ink chamber forming substrate 41, and a feed port forming plate 43 joined on the back of the ink chamber forming substrate 41.

[0045] In the ink chamber forming substrate 41, nozzle interconnection ports 44 interconnecting to the nozzle openings 13 are formed. In the feed port forming plate 43, ink feed ports 45 for interconnecting the common ink chambers, 33 and the first ink flow paths 38 and interconnection ports 46 for interconnecting the nozzle interconnection ports 44 and the second ink flow paths 39 are bored.

[0046] Therefore, in the recording head 1, a series of ink flow paths are formed between the common ink chambers 33 and the nozzle openings 13 via the pressure chambers 31.

[0047] The piezo-electric vibrators 25 are formed on the opposite side of the pressure chambers 31 with respect to the diaphragm 37. The piezo-electric vibrators 25 are in a flat-plate shape, and lower electrodes 48 are formed on the front of each of the piezo-electric vibrators 25, and upper electrodes 49 are formed on the back of each of the piezo-electric vibrators 25 so as to cover the piezo-electric vibrators 25.

[0048] At both ends of the actuator unit 32, connection terminals 50 of which the end parts are conducted to the upper electrodes 49 of the respective piezo-electric vibrators 25 are formed. The end faces of the connection terminals 50 are formed higher than the piezo-electric vibrators 25. To the end faces of the connection terminals 50, a flexible circuit substrate 51 is joined and a driving waveform is supplied to the piezo-electric vibrators 25 via the connection terminals 50 and the upper electrodes 49.

[0049] The numbers of the pressure chambers 31, the piezo-electric vibrators 25, and the connection terminals 50 shown in the drawing are just two respectively, though many units are installed in correspondence with the nozzle openings 13.

[0050] In the recording head 1, when a driving pulse is input, a voltage difference occurs between the upper electrode 49 and the lower electrode 48. By this voltage difference, the piezo-electric vibrator 25 is contracted perpendicularly to the electric field. In this case, the part of the piezo-electric vibrator 25 on the side of the lower electrode 48 which is joined to the diaphragm 37 is not contracted and only the part on the side of the upper electrode 49 is contracted, so that the piezo-electric vibrator 25 and the diaphragm 37 is deflected so as to project on the side of the pressure chamber 31 and the volume of the pressure chamber 31 is contracted.

[0051] When an ink drop is to be ejected from the nozzle opening 13, for example, the pressure chamber 31 is contracted suddenly. Namely, when the pressure chamber 31 is contracted suddenly, the ink pressure in the pressure chamber 31 increases and an ink drop is ejected from the nozzle opening 13 in correspondence to the pressure rise. Further, when the voltage difference between the upper electrode 49 and the lower electrode 48 is eliminated, the piezo-electric vibrator 25 and the diaphragm 37 are returned to their original conditions. By doing this, the contracted pressure chamber 31 is expanded internally and ink is fed into the pressure chamber 31 from the common ink chamber 33 via the ink feed port 45.

[0052] Fig. 2 is a block diagram of the ink jet recorder of this embodiment. As shown in Fig. 2, the recorder has a printer controller 61 and a print engine 62. The printer controller 61 has an interface 63 for receiving print data from the host computer (not shown in the drawing), a RAM 64 for storing various data, a ROM 65 for storing control routines for various data processes, a controller 82 composed of a CPU, an oscillation circuit 66, a driving signal generation circuit (driving signal generation means) 83 for generating a driving signal to be supplied to the recording head 1, and an interface 67 for transmitting print data expanded to dot pattern data (bitmap data) and a driving signal to the print engine 62.

[0053] In addition to this, the printer controller 61 holds a memory card 76 which is a kind of recording medium in a removable state and has a card slot 77 for functioning as a recording medium holding part and a card interface 78 for transmitting information recorded in the memory card 76 to the controller 82. In the memory card 76, data concerning the waveforms of driving signals is recorded. As a recording medium other than the memory card 76, for example, a floppy disk, a hard disk, or a photoelectromagnetic disk may be used.

[0054] The controller 82 is a kind of computer and controls ejection of ink drops by referring to the wave-

form data of driving signals recorded in the memory card 76 and the control routine recorded in the ROM 65.

[0055] The interface 63 receives print data composed of, for example, any one data of a character code, a graphic function, and image data or a plurality of data from the host computer. Further, the interface 63 can output a busy (BUSY) signal or an acknowledge (ACK) signal to the host computer.

[0056] The RAM 64 may be used as a receiving buffer, an intermediate buffer, an output buffer, or a work memory (not shown in the drawing). In the receiving buffer, print data from the host computer is stored temporarily, and in the intermediate buffer, intermediate code data is stored, and in the output buffer, dot pattern data is expanded.

[0057] The ROM 65 stores various control routines executed by the controller 82, font data, and graphic functions.

[0058] In the ROM 65, the control routine (control program) continuously used without being changed is stored. Data concerning the waveforms of driving signals which are expected to be upgraded or changed are stored in the memory card 76.

[0059] The controller 82 controls the driving signal generation circuit 83 on the basis of the data concerning the waveforms of driving signals read from the memory card 76 and generates a predetermined driving signal which will be described later in detail.

[0060] The print engine 62 is composed of a stepping motor 80, a paper feed motor 81, and an electric driving system 71 for the recording head 1. The electric driving system 71 for the recording head 1 has a shift register 72, a latch circuit 73, a level shifter 74, a switch 75, and piezo-electric vibrators 25. The shift register 72, the latch circuit 73, the level shifter 74, and the switch 75 function as pulse generation means of the present invention.

[0061] Fig. 3 shows an example of the driving signal generation circuit 83 including a waveform generation circuit 91 and a current amplifier circuit 92.

[0062] The waveform generation circuit 91 has a waveform memory 93, a first waveform latch circuit 94, a second waveform latch circuit 95, an adder 96, a digital-analog converter 97, and a voltage amplifier circuit 98.

[0063] The waveform memory 93 functions as a variation data storage unit to individually store a plurality of kinds of voltage variation data output from the controller 82. The first waveform latch circuit 94 is electrically connected to the waveform memory 93. The first waveform latch circuit 94 holds voltage variation data stored at a predetermined address of the waveform memory 93 in synchronization with a first timing signal. To the adder 96, output of the first waveform latch circuit 94 and output of the second waveform latch circuit 95 are input, and to the output side of the adder 96, the second waveform latch circuit 95 is electrically connected. The adder 96 functions as a variation data adding means and adds and outputs output signals.

[0064] The second waveform latch circuit 95 is an output data holding unit to hold data (voltage information) output from the adder 96 in synchronization with a second timing signal. The D-A converter 97 is electrically connected to the output side of the second waveform latch circuit 95 and converts an output signal held by the second waveform latch circuit 95 to an analog signal. The voltage amplifier circuit 98 is electrically connected to the output side of the D-A converter 97 and amplifies the analog signal converted by the D-A converter 97 up to the voltage of a driving signal.

[0065] The current amplifier circuit 92 is electrically connected to the output side of the voltage amplifier circuit 98 and amplifies the current of a signal amplified in voltage by the voltage amplifier circuit 98 and outputs it as a driving signal (COM).

[0066] In the driving signal generation circuit 83 having the aforementioned constitution, prior to generation of a driving signal, a plurality of variation data indicating voltage variations are individually stored in the storage area of the waveform memory 93. For example, the controller 82 outputs variation data and address data corresponding to this variation data to the waveform memory 93. And, the waveform memory 93 stores the variation data in the storage area designated by the address data. The variation data is composed of data including positive and negative information (increase and decrease information) and the address data is composed of a 4-bit address signal.

[0067] When a plurality of kinds of variation data is stored in the waveform memory 93 in this way, a driving signal can be generated.

[0068] A driving signal is generated by setting variation data in the first waveform latch circuit 94 and adding the variation data set in the first waveform latch circuit 94 to the output voltage from the second waveform latch circuit 95 every predetermined update period.

[0069] As a computer other than the controller 82, for example, a host computer directly connected to the recorder independently or one among many computers connected via a network may be cited.

[0070] In the recording head 1 shown in Fig. 1, it can be controlled whether or not to input a driving signal to the piezo-electric vibrators 25 by print data. For example, during a period of print data of "1", the switch 75 is in a connection state, so that the driving signal (COM) is supplied to the piezo-electric vibrators 25. The piezo-electric vibrators 25 are deformed by the supplied driving signal. Further, during a period of print data of "0", the switch 75 is in a non-connection state, so that the supply of the driving signal to the piezo-electric vibrators 25 is interrupted. During the period of print data of "0", each of the piezo-electric vibrators 25 holds the preceding charge and the preceding deformation condition is maintained.

[0071] Next, the driving method for the ink jet recorder in this embodiment will be explained. The ink jet record-

er in this embodiment ejects large ink drops for forming large dots, medium ink drops for forming medium dots, and small ink drops for forming small dots from the same nozzle opening 13. Here, "large dots" typically means comparatively large dots formed from large ink drops of about 20 pL (picoliter) in volume. "Medium dots" typically means medium dots formed from medium ink drops of about 8 pL in volume. "Small dots" typically means comparatively small dots formed from small ink drops of about 4 pL in volume.

[0072] In this embodiment, two large dot ejection waveform elements constituting a large dot driving pulse are formed in the same shape and the large dot ejection waveform elements are arranged every constant period in the driving signal. Furthermore, a small dot ejection waveform element is arranged between the large dot ejection waveform elements in the driving signal.

[0073] Fig. 4 is a drawing showing the waveform of a driving signal generated by the driving signal generation circuit 83 together with driving pulses for large, medium, and small dots and a minute vibration pulse generated from this driving signal. In this case, "minute vibration" pulse is a pulse to be applied to the piezo-electric vibrators 25 for finely vibrating the meniscus of ink (liquid) at the nozzle opening 13 of the recording head 1 without ejecting an ink drop. On the other band, pulses to be applied to the piezo-electric vibrators 25 so as to eject large, medium, and small dots are called driving pulses.

[0074] In the driving signal shown in Fig. 4, the part of the period T1 (P300 to P303) is the first waveform element and the part of the period T2 (P304 to P311) is the second waveform element. The part of the period T3 (P312 to P317) is the third waveform element and the part of the period T4 (P317 to P323) is the fourth waveform element. The part of the period TS1 (P303 to P304) is the first connection element and the part of the period TS2 (P311 to P312) is the second connection element.

[0075] In this case, "connection element" is a signal element for connecting a plurality of waveform elements between different voltage levels and is not used to generate a driving pulse for ejecting an ink drop. on the other hand, "waveform element" is a signal element used to generate a driving pulse for ejecting an ink drop. As described hereunder, at least a part of the connection element is used to generate a minute vibration pulse.

[0076] The aforementioned first waveform element includes a contraction waveform element (P301 to P302). This contraction waveform element is a preparatory waveform element which contracts the pressure chamber 31 of waiting condition without ejecting an ink drop. The second waveform element includes a first charge waveform element (P305 to P307), a first ejection waveform element (P307 to P309), and a first vibration damping waveform element (P309 to P310). The third waveform element includes a second charge waveform element (P313 to P314), a second ejection waveform element (P314 to P315), and a second vibration damping waveform element (P315 to P316). The fourth waveform element includes a third charge waveform element (P318 to P320), a third ejection waveform element (P320 to P322), and a third vibration damping waveform element (P322 to P323). The end point (P323) of the third vibration damping waveform element is the start point (P300) of the first waveform element in the next driving period T.

[0077] In this case, the "contraction waveform element" is a signal element for operating the piezo-electric vibrators 25 so as to reduce the volume of the pressure chambers 31. The "ejection waveform element" is a signal element for operating the piezo-electric vibrators 25 so as to eject ink drops from the nozzle openings 13. The "vibration damping waveform element" is a signal element for operating the piezo-electric vibrators 25 so as to suppress the vibration of the meniscus after ejection of ink drops.

[0078] To generate a small dot driving pulse from the aforementioned driving signal, the pulse generation means (that is, the shift register 72, the latch circuit 73, the level shifter 74, and the switch 75) selects the first waveform element and the third waveform element and connects the selected waveform elements. Concretely, the pulse generation means selects waveform elements on the basis of the print data set in "100010".

[0079] Further, when a medium dot driving pulse is to be generated, the pulse generation means selects the fourth waveform element on the basis of the print data set in "000001". Namely, the fourth waveform element constitutes a medium dot driving pulse independently.

[0080] Furthermore, when a large dot driving pulse is to be generated, the pulse generation means selects the second waveform element and the fourth waveform element on the basis of the print data set in "001001" and connects them. In the large dot driving pulse, the first ejection waveform element (P307 to P309) of the second waveform element and the third ejection waveform element (P320 to P322) of the fourth waveform element are large dot ejection waveform elements.

[0081] With respect to the two large dot ejection waveform elements constituting this large dot driving pulse, the former large dot ejection waveform element (P305 to P310) and the latter large dot ejection waveform element (P318 to P323) are the same in the waveform shape. Further, the time from the start point (P300) of the driving period T to the start point (P305) of the former large dot ejection waveform element and the time from the end point (P310) of the former large dot ejection waveform element to the start point (P318) of the latter large dot ejection waveform element are made equal to each other. Namely, the time from the end point of the large dot ejection waveform element to the start point of the next large dot ejection waveform element is set to a fixed time. Furthermore, between the large dot ejection waveform elements, the small dot ejection waveform (P313 to P316) constituting the small dot driving pulse is arranged.

[0082] Further, when a minute vibration pulse is to be generated from the driving signal, the pulse generation means selects the first waveform element (P300 to P303) and the first connection element (P303 to P304). Like this, the minute vibration pulse is generated by a combination of a waveform element and a connection element.

[0083] As mentioned above, according to the ink jet recorder of this embodiment, a minute vibration pulse is generated by a combination of a waveform element and a connection element, so that a plurality of driving pulses for generating a plurality of kinds of ink drops different in the ink volume and a minute vibration pulse for causing minute vibration to the meniscus can be set efficiently in a driving signal in one driving period free of reduction in the printing speed, that is, without extending the driving period T.

[0084] Moreover, in the present embodiment, a minute vibration pulse is generated from the contraction waveform element (P301 to P302) constituting a preparatory part of a small dot driving pulse and the first connection element (P303 to P304) following the contraction waveform element (P301 to P302). Generally, a contraction waveform element constituting a preparatory part of a small dot driving pulse has a relatively high wave height. Therefore, according to the present embodiment, although a single minute vibration pulse is generated in a single driving period, a sufficient ink stirring effect can be obtained.

[0085] Furthermore, according to the present embodiment, a minute vibration pulse is generated by selecting the waveform element (P301 to P302) which contracts the pressure chamber 31 and the connection element (P303 to P304) which expands the pressure chamber 31, following the waveform element (P301 to P302). Since the pressure chamber 31 is contracted and then expanded, an ink stirring effect can be enhanced comparing to the case that the pressure chamber 31 is expanded and then contracted.

[0086] Further, in the aforementioned driving signal, the large dot ejection waveform elements are arranged before and after the small dot ejection waveform element, so that, in two-way printing like printing in both forth motion and back motion of the recording head 1 (that is, the carriage), large ink drops are positioned on the basis of the ejection position of small inks drop ejected by the small dot driving pulse, so that the ejection positions of small ink drops and large ink drops can be aligned with each other.

[0087] Further, the former large dot ejection waveform element and the latter large dot ejection waveform element are formed in the same waveform and the volume of an ink drop ejected by the former large dot ejection waveform element can be made equal to the volume of an ink drop ejected by the latter large dot ejection waveform element.

[0088] Furthermore, since a large dot ejection waveform element is generated every fixed period in the driving period T, in a case of two-way printing, the same recording condition can be realized in both forth motion and back motion.

[0089] As mentioned above, in this embodiment, particularly in a constitution of two-way printing, an image of good quality can be recorded.

[0090] Next, the first modification of the aforementioned embodiment will be explained by referring to Fig. 5.

[0091] Fig. 5 is a drawing showing a driving signal, various driving pulses, and a minute vibration pulse in this modification. Differences between the driving signal shown in Fig. 5 and the driving signal shown in Fig. 4 are that, in the first waveform element of the part (P300 to P303) of the period T1, a step-shaped part (P330 included) is formed between P301 and P302 and also, in the first connection element of the part (P303 to P304) of the period TS1, a step-shaped part (P331 included) is formed. The period TS1 is divided into a period TS1A and a period TS1B at the point of P331.

[0092] The step-shaped part (P330 included) in the first waveform element and the step-shaped part (P331 included) in the first connection element are formed at the same voltage level.

[0093] When a minute vibration pulse is to be generated from the driving signal, the pulse generation means selects the part of P300 to P301 and the first half (P301 to P330) of the step-shaped part of the first waveform element (P300 to P303) and the latter half (P331 to P304) of the first connection element (P303 to P304) formed in a step shape.

[0094] As mentioned above, in this modification, the minute vibration pulse is generated by a combination of at least a part of waveform elements and at least a part of a connection element. Accordingly, some part of a connection element may not be used to generate a minute vibration pulse, as is true with the signal element (P303 to P331) of TS1A.

[0095] Moreover, when an ink of high viscosity is used, the pulse generation means selects the whole of the first waveform element (P300 to P303) and the whole of the first connection element (P303 to P304) to generate a minute vibration pulse of relatively high wave height.

[0096] As mentioned above, also in this modification, a minute vibration pulse can be generated by a combination of a waveform element and a connection element, so that the same effect as that of the aforementioned embodiment can be obtained.

[0097] In addition, according to this modification, since the step-shaped part (P330 included) is formed in the contraction waveform element (P301 to P302) constituting a preparatory part of a small dot driving pulse and the step-shaped part (P331 included) is formed in the first connection element (P303 to P304) following the contraction waveform element (P301 to P302), a wave height of a minute vibration pulse can be Set at two level selectively for the sake of these step-shaped

parts. Therefore, it is possible to generate a minute vibration pulse of relatively high wave height when an ink of high viscosity is used, and to generate a minute vibration pulse of relatively low wave height when an ink of low viscosity is used. Since minute vibrations of a suitable level of intensity can be applied to an ink in accordance with its viscosity, a generation of an ink mist due to an excessive vibration can be prevented, and also an insufficient stirring of an ink due to too little vibration can be prevented.

[0098] Moreover, from the another point of view, when a wave height of a waveform element, which is intended to be used as a part of minute vibration pulse, is too high, a minute vibration pulse of a desired wave height can be generated by forming step-shaped parts having the same voltage level at the waveform element and a connection element following the waveform element, respectively, in accordance with this modification.

[0099] Next, the second modification of the aforementioned embodiment will be explained by referring to Fig. 6.

[0100] Fig. 6 is a drawing showing a driving signal, various driving pulses, and a minute vibration pulse in this modification. Differences between the driving signal shown in Fig. 6 and the driving signal shown in Fig. 4 are that a step-shaped part (P330 included) is formed between P301 and P302, a step-shaped part (P331 included) is preferably formed between P303 and P304, and the height of the part of P312 to P313 included in the third waveform element (P312 to P317) of the period T3 is set slightly lower than that of the driving signal shown in Fig. 4, in correspondence to the height of P330 included in the step-shaped part.

[0101] As explained above, the step-shaped part including P330, the step-shaped part including P331 and the part P312 to P313 of the third waveform element are formed at the same voltage level.

[0102] Moreover, in this modification, the part of P330 to P303 of the driving signal constitutes not a waveform element, but a connection element. Namely, The part of P300 to P330 of the driving signal constitutes a first waveform element of a period T1', and the part P330 to P304 of the driving signal constitutes a first connection element of a period TS1'.

[0103] To generate a small dot driving pulse from the driving signal, the pulse generation means selects the whole of the first waveform element (P300 to P330) and the third waveform element (P312 to P317).

[0104] Further, when a minute vibration pulse is to be generated from the driving signal, the pulse generation means selects the first waveform element (P300 to P330) and the first connection element (P330 to P304).

[0105] Moreover, when an ink of low viscosity is used, the pulse generation means selects the whole of the first waveform element (P300 to P330) and the latter half (P331 to P304) of the first connection element (P330 to P304) to generate a minute vibration pulse of relatively low wave height.

[0106] As mentioned above, also in this modification, a minute vibration pulse can be generated by a combination of a waveform element and a connection element, so that the same effect as that of the aforementioned embodiment can be obtained.

[0107] In addition, according to this modification, since it is possible to generate a minute vibration pulse having a wave height that is higher than the height of the contraction waveform element (P301 to P330) constituting a preparatory part of a small dot driving pulse, a sufficient stirring effect for an ink can be obtained even for an ink of high viscosity. Moreover, since it is possible to generate a minute vibration pulse of relatively low wave height when an ink of low viscosity is used, a generation of an ink mist due to an excessive vibration can be prevented.

[0108] In the aforementioned embodiment and the modifications thereof, the recording head 1 using the piezo-electric vibrators 25 of the deflection vibration mode as pressure generation elements is shown as an example. However, as shown in Fig. 7, the present invention can be also applied to a recording head 162 using piezo-electric vibrators 161 in the longitudinal vibration mode.

[0109] This recording head 162 has a synthetic-resin base pedestal 163 and a flow path unit 164 attached to the front (on the left of the drawing) of the base pedestal 163. The flow path unit 164 is composed of a nozzle plate 166 having a bored nozzle opening 165, a diaphragm 167, and a flow path forming plate 168.

[0110] The base pedestal 163 is a block-shaped member having a storage space 169 opened on the front and back. In the storage space 169, the piezo-electric vibrators 161 fixed to a fixing base plate 170 are stored.

[0111] The nozzle plate 166 is a thin laminar member having many bored nozzle openings 165 along the sub-scanning direction. The respective nozzle openings 165 are formed at a predetermined pitch corresponding to the dot forming density. The diaphragm 167 is a laminar member having an island part 171 as a thick part with which the piezo-electric vibrators 161 are in contact and an elastic thin part 172 formed so as to surround the island part 171.

[0112] Many island parts 171 are formed in a predetermined pitch so that one island part 171 corresponds to one nozzle opening 165.

[0113] The flow path forming plate 168 has an opening for forming a pressure chamber 173, a common ink chamber 174, and an ink feed path 175 for interconnecting the pressure chamber 173 and the common ink chamber 174.

[0114] The nozzle plate 166 is arranged on the front of the flow path forming plate 168, and the diaphragm 167 is arranged on the back side, and the nozzle plate 166 and the diaphragm 167 are integrated by adhesion in a state that the flow path forming plate 168 is held between them, and the flow path unit 164 is formed.

[0115] In the flow path unit 164, the pressure cham-

bers are formed on the back side of the nozzle openings 165 and the island parts 171 of the diaphragm 167 are positioned on the back side of the pressure chambers 173. The pressure chambers 173 and the common ink chamber 174 are interconnected by the ink feed path 175.

[0116] The ends of the piezo-electric vibrators 161 are in contact with the back side of the island parts 171 and the piezo-electric vibrators 161 are fixed to the base pedestal 163 in the contact state. To the piezo-electric vibrators 161, a driving signal (COM) and print data (SI) are supplied via a flexible cable.

[0117] The piezo-electric vibrator 161 of the longitudinal vibration mode has a characteristic that when charged, it is contracted perpendicularly to the electric field, and when discharged, it is expanded perpendicularly to the electric field. Therefore, in the recording head 162, the piezo-electric vibrator 161 is contracted backward by charging, and the island part 171 is pulled backward in correspondence to the contraction, and the contracted pressure chamber 173 is expanded. In correspondence to this expansion, ink in the common ink chamber 174 flows into the pressure chamber 173 via the ink feed path 175. On the other hand, the piezo-electric vibrator 161 is expanded forward by discharging, and the island part 171 of the elastic plate is pressed forward, thus the pressure chamber 173 is contracted. In correspondence to this contraction, the ink pressure in the pressure chamber 173 increases.

[0118] As mentioned above, in the recording head 162, the relation between the voltage level and the expansion and contraction of the pressure chamber 173 due to charge and discharge of the piezo-electric vibrator 161 is inverse to that in each of the aforementioned embodiment and modifications. Therefore, when the recording head 162 is to be used, a driving signal and a driving waveform in which the driving signal and driving waveform indicated in the preceding embodiment are interchanged in positive and negative of voltage with respect to a boundary of the intermediate voltage. Namely, in the recording head 162, the pressure chamber 173 is filled with ink by increasing the voltage. In the same way, ink drops are ejected by decreasing the voltage. Even when the recording head 162 is used, the same operation effect as that of the aforementioned embodiment is obtained.

[0119] As mentioned above, according to the present invention, a minute vibration pulse is generated by a combination of a waveform element and a connection element, so that a plurality of driving pulses for generating a plurality of kinds of ink drops different in the ink volume and a minute vibration pulse for causing minute vibration to the meniscus can be set efficiently in a driving signal in one driving period free of reduction in the printing speed, that is, without extending the driving period.

[0120] Although the invention has been described in its preferred embodiments with a certain degree of particularity, obviously many changes and variations are possible therein. It is therefore to be understood that the present invention may be practiced otherwise than as specifically described herein

Claims

1. A liquid jet apparatus comprising:

a pressure generation element installed in correspondence to a pressure chamber interconnected to a nozzle opening, said pressure generation element adapted to be applied with a driving pulse thereby causing a pressure change to a liquid in said pressure chamber to eject a liquid drop from said nozzle opening;
driving signal generation unit to generate a driving signal to be used for generating a plurality of kinds of said driving pulses for ejecting said liquid drop and a minute vibration pulse to be applied to said pressure generation element so as to finely vibrate a meniscus of said liquid; and
pulse generation unit to generate said minute vibration pulse and said driving pulses by selecting a part of said driving signal,

wherein said driving signal includes a plurality of waveform elements to be used to generate a plurality of kinds of said driving pulses and a connection element connecting said waveform elements between different voltage levels and not to be used to generate said driving pulses, and

wherein said pulse generation means generates said minute vibration pulse by a combination of at least a part of said waveform elements and at least a part of said connection element.

2. A liquid jet apparatus according to claim 1, wherein said driving pulses eject a plurality of kinds of said liquid drops different in volume, said driving pulse for ejecting said liquid drop of a smallest volume being generated by a combination of a plurality of said waveform elements, and

wherein said minute vibration pulse is generated by a combination of a part of a plurality of said waveform elements for ejecting said liquid drop of a smallest volume and at least a part of said connection element for connecting said part of a plurality of said waveform elements for ejecting said liquid drop of a smallest volume to another said waveform element.

3. A liquid jet apparatus according to claim 2, wherein a part of said waveform elements for ejecting said liquid drop of a smallest volume is formed in a step shape,

wherein said connection element for connecting said part of a plurality of said waveform elements for ejecting said liquid drop of a smallest volume to another said waveform element is formed in a step shape, and

wherein said minute vibration pulse is generated by a combination of a half of said waveform element of a step shape and a half of said connection element of a step shape.

4. A liquid jet apparatus according to claim 2 or 3, wherein said connection element follows said part of a plurality of said waveform elements for ejecting said liquid drop of a smallest volume, and

wherein said connection element expands or contracts said pressure chamber in the same direction as said part of a plurality of said waveform elements for ejecting said liquid drop of a smallest volume does and then contracts or expands said pressure chamber in the opposite direction.

5. A liquid jet apparatus according to any of claims 2 to 4, wherein said part of a plurality of said waveform elements used for generating said minute vibration pulse is a preparatory waveform element which contracts said pressure chamber of waiting condition without ejecting said liquid drop.

6. A liquid jet apparatus according to any of claims 2 to 5, wherein a single pulse of said minute vibration pulse is generated in a single period of said driving signal.

7. A liquid jet apparatus according to any of the preceding claims, wherein said minute vibration pulse is generated from said at least a part of said waveform elements and said at least a part of said connection element following said at least a part of said waveform elements.

8. A liquid jet apparatus according to any of the preceding claims, wherein said plurality of waveform elements include ejection waveform elements for operating said pressure generation element so as to eject said liquid drops from said nozzle opening and charging waveform elements for operating said pressure generation element so as to charge said pressure chamber with said liquid, and

wherein said pulse generation means generates said plurality of kinds of said driving pulses depending on timing for selecting said ejection waveform elements and said charging waveform elements.

9. A liquid jet apparatus according to claim 8, wherein said plurality of kinds of said driving pulses eject a plurality of kinds of said liquid drops different in volume, and

wherein said plurality of waveform elements include a pair of said ejection waveform elements for ejecting said liquid drop of a largest volume and said ejection waveform element, disposed between said pair of said ejection waveform elements, for ejecting said liquid drop of a smallest volume.

10. A liquid jet apparatus according to any of the preceding claims, wherein said pressure generation element comprises a piezo-electric vibrator of a deflection vibration mode.

11. A liquid jet apparatus according to any of claims 1 to 9, wherein said pressure generation element comprises a piezo-electric vibrator of a longitudinal vibration mode.

12. A method for driving a liquid jet apparatus with a pressure generation element installed in correspondence to a pressure chamber interconnected to a nozzle opening, said pressure generation element adapted to be applied with a driving pulse thereby causing a pressure change to a liquid in said pressure chamber to eject a liquid drop from said nozzle opening, comprising the steps of:

generating a driving signal to be used for generating a plurality of kinds of said driving pulses for ejecting said liquid drop and a minute vibration pulse to be applied to said pressure generation element so as to finely vibrate a meniscus of said liquid; and
generating one of said minute vibration pulse and said driving pulses by selecting a part of said driving signal,

wherein said driving signal includes a plurality of waveform elements to be used to generate a plurality of kinds of said driving pulses and a connection element connecting said waveform elements between different voltage levels and not to be used to generate said driving pulses, and

wherein said minute vibration pulse is generated by a combination of at least a part of said waveform elements and at least a part of said connection element.

13. A method for driving a liquid jet apparatus according to claim 12, wherein said driving pulses eject a plurality of kinds of said liquid drops different in volume, said driving pulse for ejecting said liquid drop of a smallest volume being generated by a combination of a plurality of said waveform elements, and

wherein said minute vibration pulse is generated by a combination of a part of a plurality of said waveform elements for ejecting said liquid drop of a smallest volume and at least a part of said connection element for connecting said part of a plural-

ity of said waveform elements for ejecting said liquid drop of a smallest volume to another said waveform element.

14. A method for driving a liquid jet apparatus according to claim 13, wherein a part of said waveform elements for ejecting said liquid drop of a smallest volume is formed in a step shape,

wherein said connection element for connecting said part of a plurality of said waveform elements for ejecting said liquid drop of a smallest volume to another said waveform element is formed in a step shape, and

wherein said minute vibration pulse is generated by a combination of a half of said waveform element of a step shape and a half of said connection element of a step shape.

15. A method for driving a liquid jet apparatus according to claim 13 or 14, wherein said connection element follows said part of a plurality of said waveform elements for ejecting said liquid drop of a smallest volume, and

wherein said connection element expands or contracts said pressure chamber in the same direction as said part of a plurality of waveform elements for ejecting said liquid drop of a smallest volume does and then contracts or expands said pressure chamber in the opposite direction.

16. A method for driving a liquid jet apparatus according . to any of claims 13 to 15, wherein said part of a plurality of said waveform elements used for generating said minute vibration pulse is a preparatory waveform element which contracts said pressure chamber of waiting condition without ejecting said liquid drop.

17. A method for driving a liquid jet apparatus according to any of claims 13 to 16, wherein a single pulse of said minute vibration pulse is generated in a single period of said driving signal.

18. A method for driving a liquid jet apparatus according to any of claims 12 to 17, wherein said minute vibration pulse is generated from said at least a part of said waveform elements and said at least a part of said. connection element following said at least a part of said waveform elements.

19. A method for driving a liquid jet apparatus according to any of claims 12 to 18, wherein said plurality of waveform elements include ejection waveform elements for operating said pressure generation element so as to eject said liquid drops from said nozzle opening and charging waveform elements for operating said pressure generation element so as to charge said pressure chamber with said liquid, and

wherein said pulse generation means generates said plurality of kinds of said driving pulses depending on timing for selecting said ejection waveform element and said charging waveform element.

20. A method for driving a liquid jet apparatus according claim 19, wherein said plurality of kinds of said driving pulses eject a plurality of kinds of said liquid drops different in volume, and

wherein said plurality of waveform elements include a pair of said ejection waveform elements for ejecting said liquid drop in a largest volume and said ejection waveform element, disposed between said pair of said ejection waveform elements, for ejecting said liquid drop of a smallest volume.

21. A method for driving a liquid jet apparatus according to any of claims 12 to 20, wherein said pressure generation element comprises a piezo-electric vibrator of a deflection vibration mode.

22. A method for driving a liquid jet apparatus according to any of claims 12 to 20, wherein said pressure generation element comprises a piezo-electric vibrator of a longitudinal vibration mode.

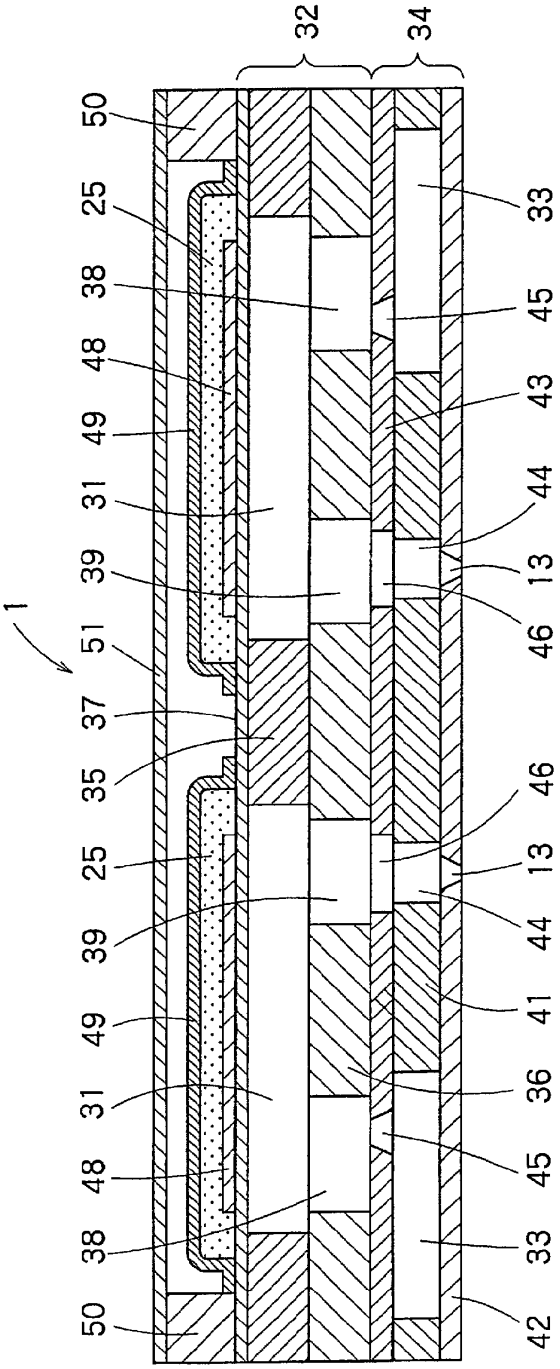
1
50
25
38
48
49
31
39
51
37
35
25
39
49
31
48
38
50
32
34
33
45
43
44
13
46
46
13
44
41
36
45
33
42

FIG. 1

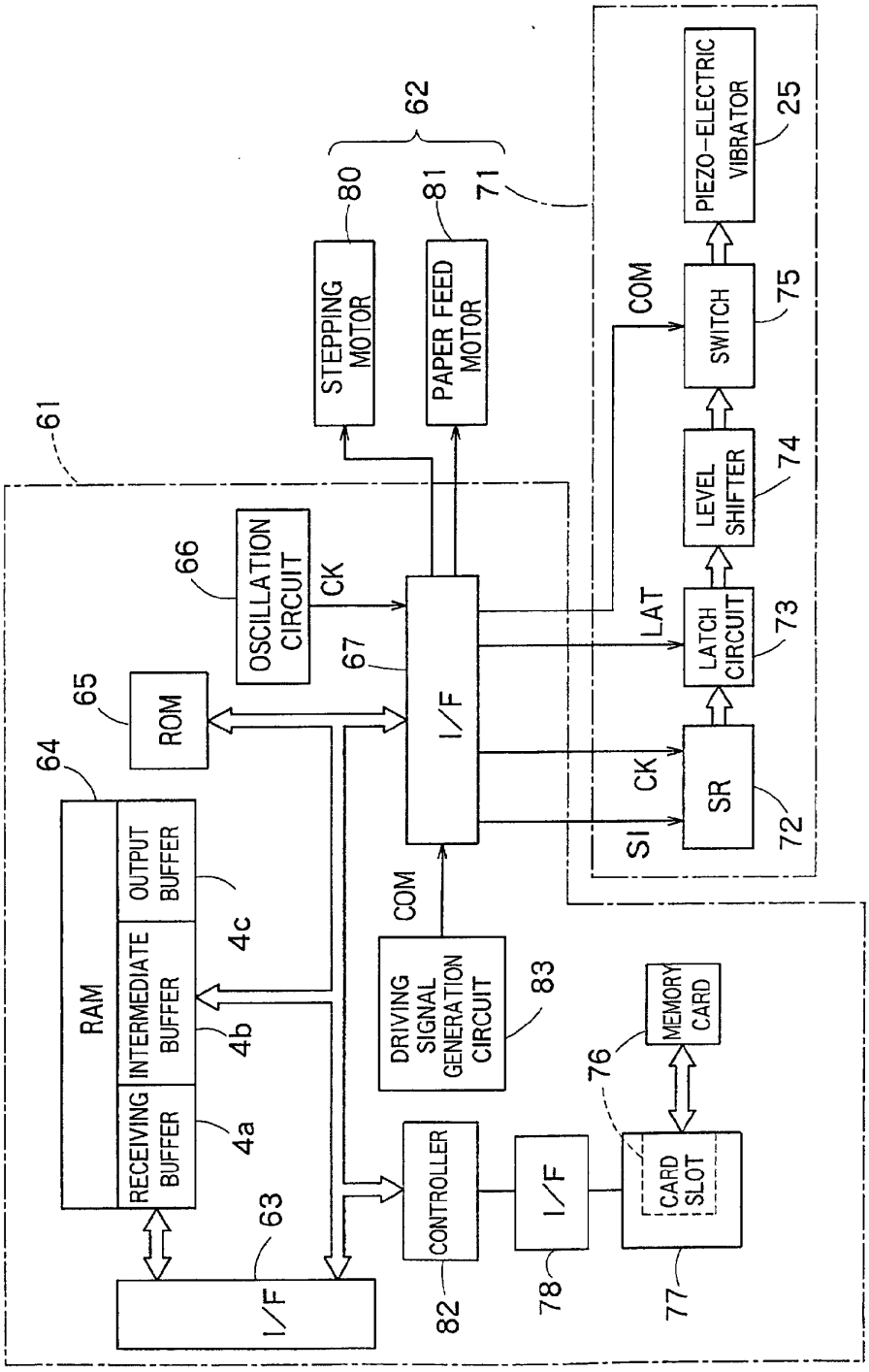
61
62
80
81
71
STEPPING MOTOR
PAPER FEED MOTOR
PIEZO-ELECTRIC VIBRATOR
25
COM
SWITCH
75
LEVEL SHIFTER
74
LATCH CIRCUIT
73
SR
72
LAT
CK
SI
66
OSCILLATION CIRCUIT
CK
67
I/F
65
ROM
64
RAM
OUTPUT BUFFER
INTERMEDIATE BUFFER
RECEIVING BUFFER
4c
4b
4a
63
I/F
COM
DRIVING SIGNAL GENERATION CIRCUIT
83
CONTROLLER
82
I/F
78
76
MEMORY CARD
CARD SLOT
77

FIG. 2

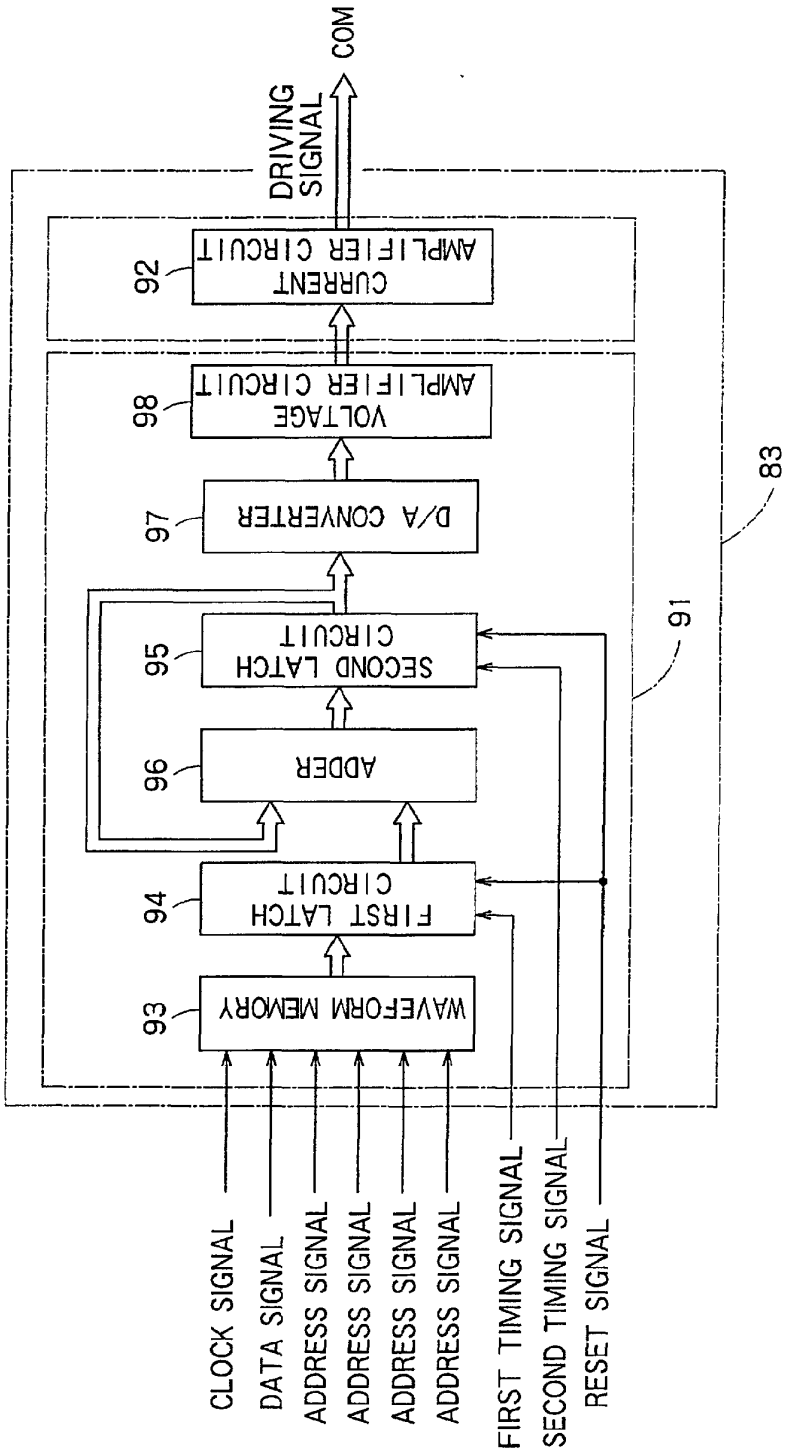
CLOCK SIGNAL
DATA SIGNAL
ADDRESS SIGNAL
ADDRESS SIGNAL
ADDRESS SIGNAL
ADDRESS SIGNAL
FIRST TIMING SIGNAL
SECOND TIMING SIGNAL
RESET SIGNAL
93
WAVEFORM MEMORY
94
FIRST LATCH CIRCUIT
96
ADDER
95
SECOND LATCH CIRCUIT
97
D/A CONVERTER
98
VOLTAGE AMPLIFIER CIRCUIT
92
CURRENT AMPLIFIER CIRCUIT
DRIVING SIGNAL
COM
91
83

FIG. 3

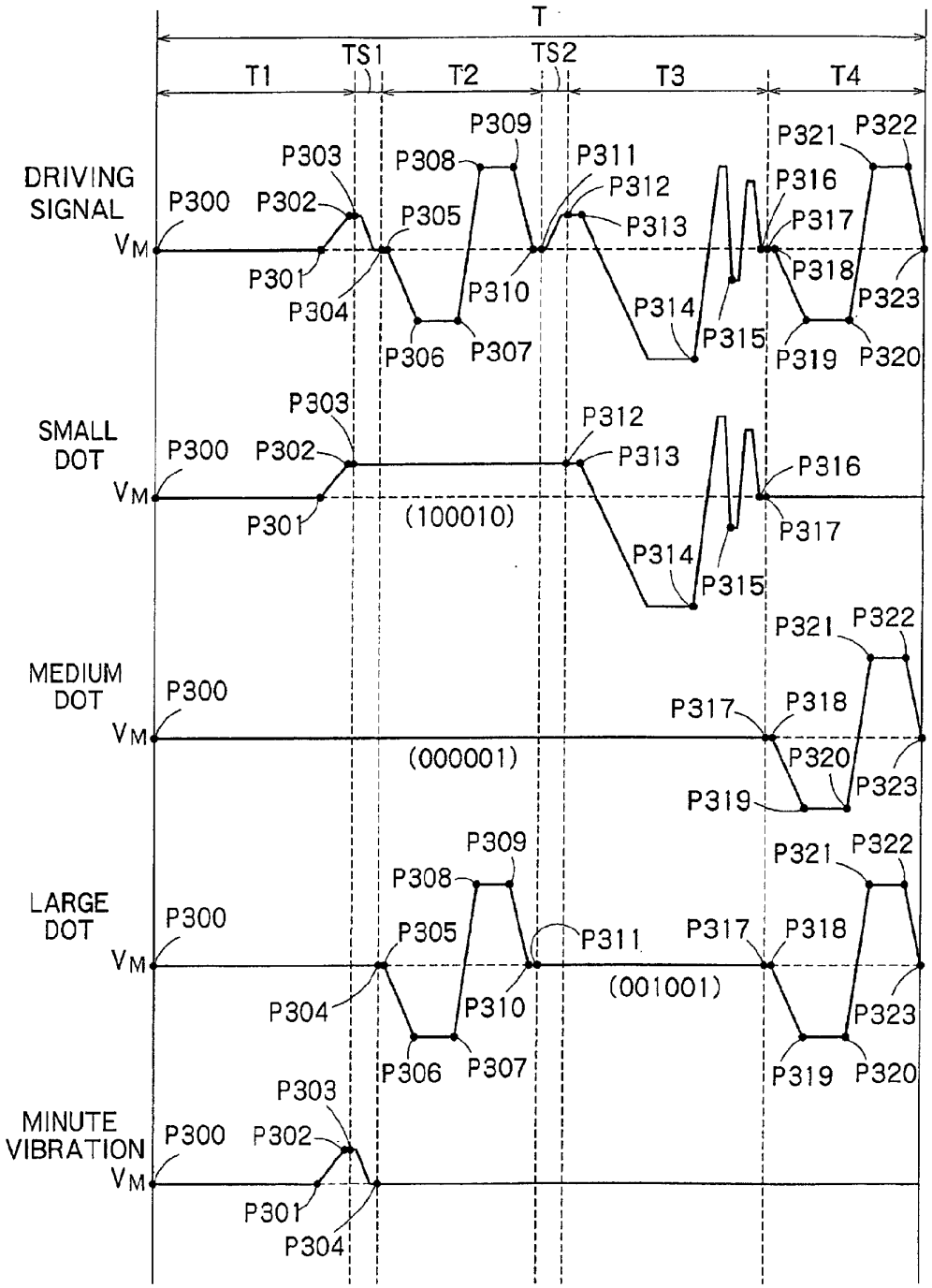
T
TS1
TS2
T1
T2
T3
T4
DRIVING SIGNAL
SMALL DOT
MEDIUM DOT
LARGE DOT
MINUTE VIBRATION
VM
P300
P301
P302
P303
P304
P305
P306
P307
P308
P309
P310
P311
P312
P313
P314
P315
P316
P317
P318
P319
P320
P321
P322
P323
(100010)
(000001)
(001001)

F I G. 4

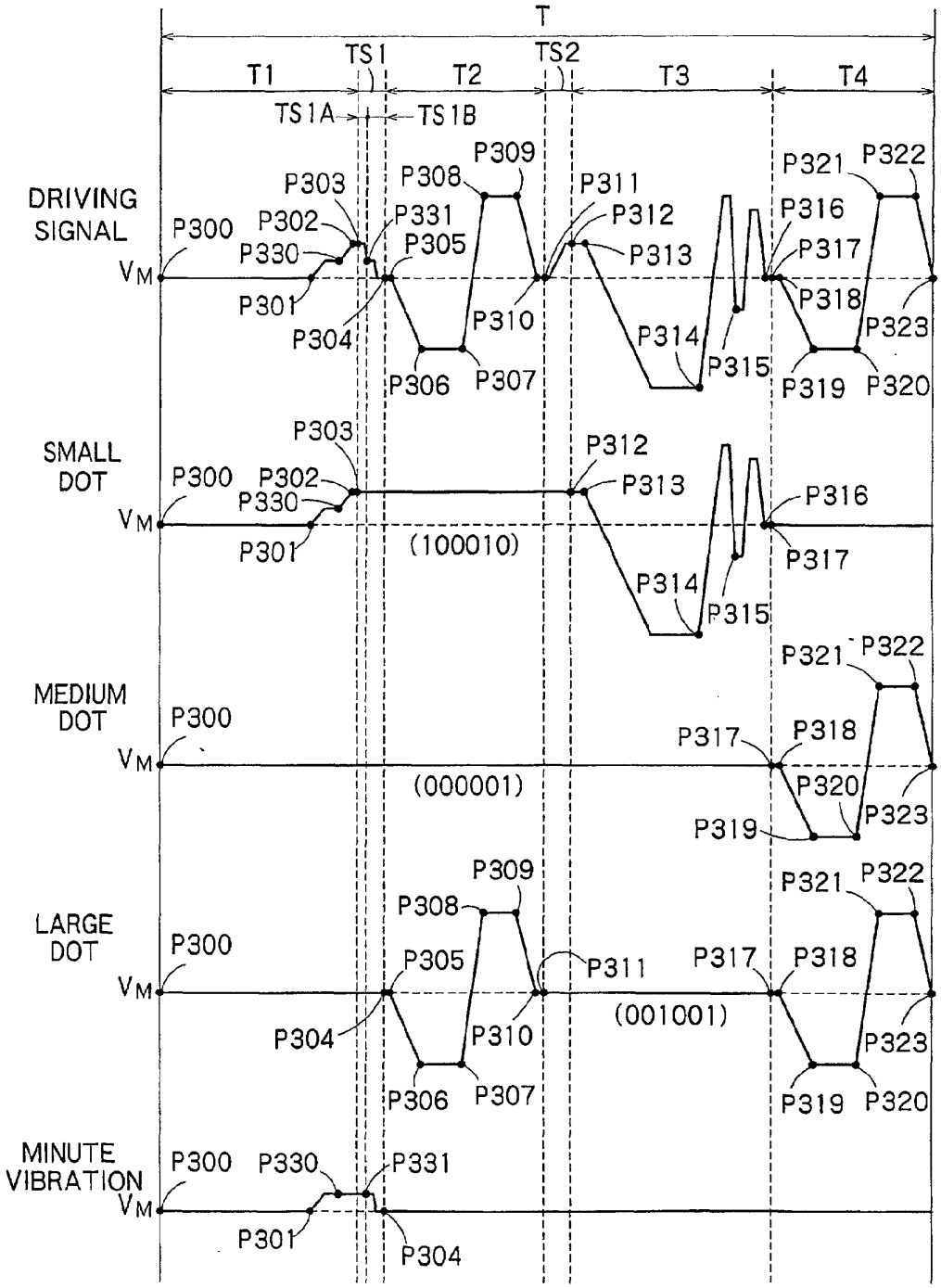
T
T1
TS1
T2
TS2
T3
T4
TS1A
TS1B
DRIVING SIGNAL
SMALL DOT
MEDIUM DOT
LARGE DOT
MINUTE VIBRATION
VM
P300
P301
P302
P303
P304
P305
P306
P307
P308
P309
P310
P311
P312
P313
P314
P315
P316
P317
P318
P319
P320
P321
P322
P323
P330
P331
(100010)
(000001)
(001001)

FIG. 5

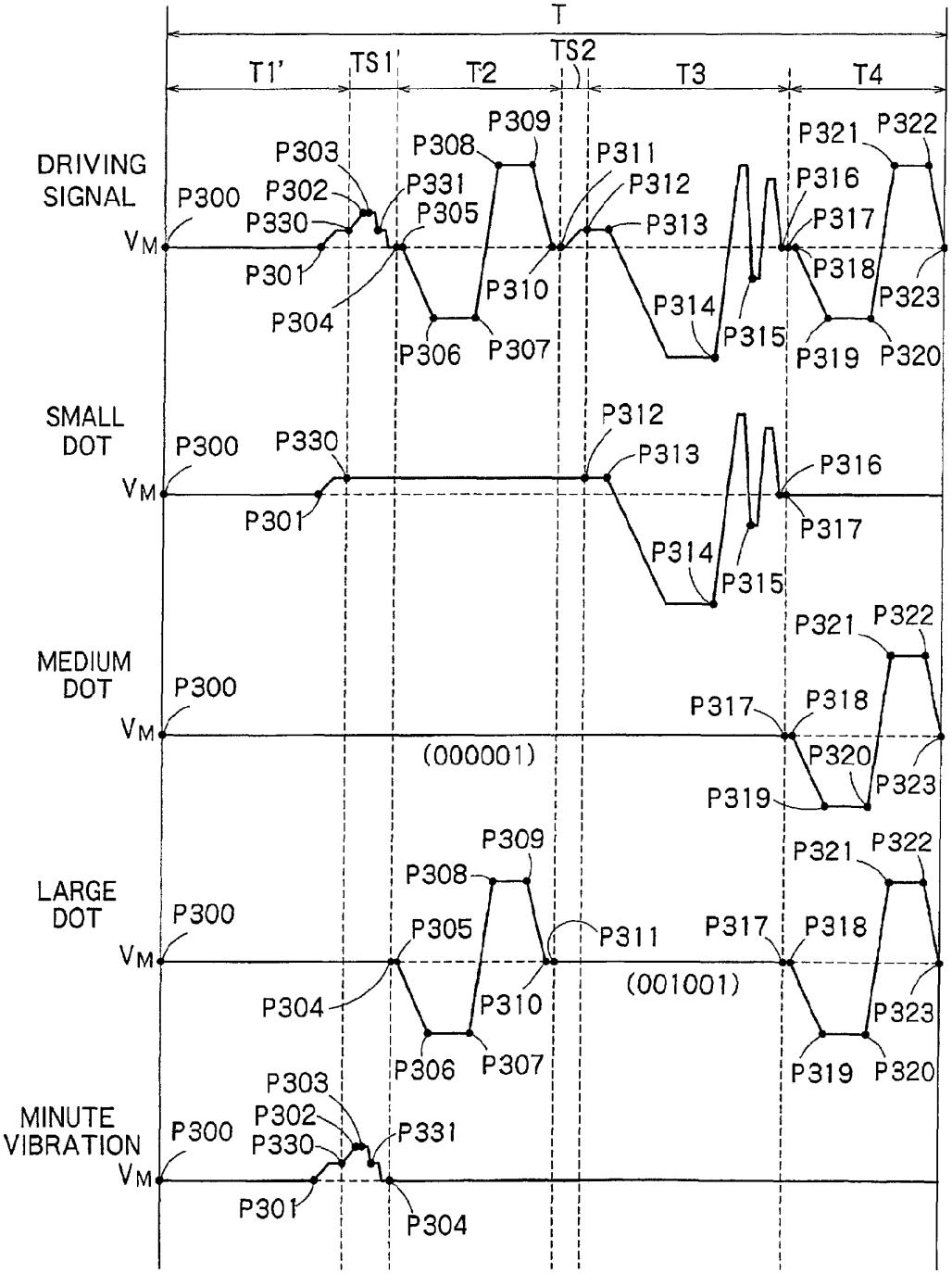
T
T1'
TS1'
T2
TS2
T3
T4
DRIVING SIGNAL
SMALL DOT
MEDIUM DOT
LARGE DOT
MINUTE VIBRATION
VM
P300
P301
P302
P303
P304
P305
P306
P307
P308
P309
P310
P311
P312
P313
P314
P315
P316
P317
P318
P319
P320
P321
P322
P323
P330
P331
(000001)
(001001)

FIG. 6

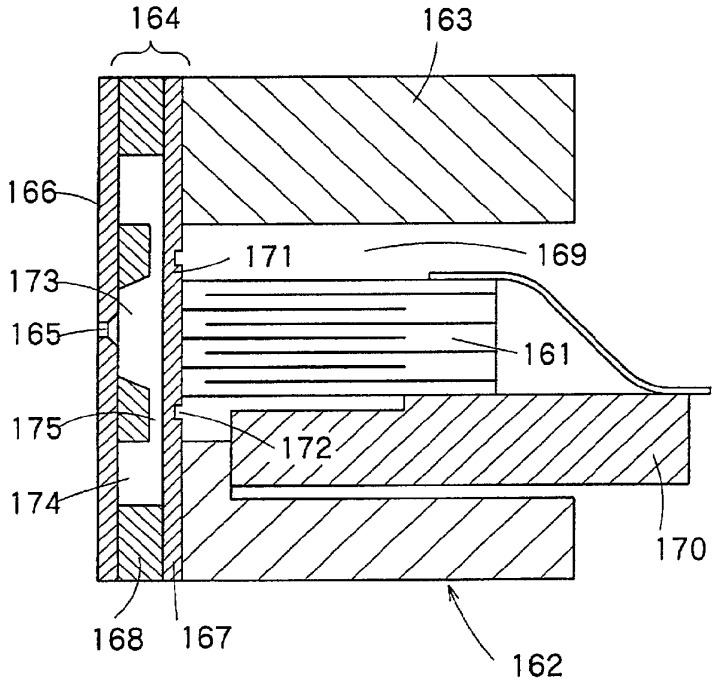

F I G. 7

Electronic Patent Application Fee Transmittal

Application Number:	
Filing Date:	
Title of Invention:	INK JET PRINTER AND METHOD FOR DEPOSITING A PROTECTIVE LAYER ON A SUBSTRATE
First Named Inventor/Applicant Name:	Edmond ABERGEL
Filer:	Allan M. Lowe/Christina Frye
Attorney Docket Number:	1013-070

Filed as Small Entity

Utility under 35 USC 111(a) Filing Fees

Description	Fee Code	Quantity	Amount	Sub-Total in USD($)
Basic Filing:				
Utility filing Fee (Electronic filing)	4011	1	82	82
Utility Search Fee	2111	1	270	270
Utility Examination Fee	2311	1	110	110
Pages:				
Claims:				
Claims in excess of 20	2202	8	26	208
Miscellaneous-Filing:				
Petition:				

Description	Fee Code	Quantity	Amount	Sub-Total in USD($)
Patent-Appeals-and-Interference:				
Post-Allowance-and-Post-Issuance:				
Extension-of-Time:				
Miscellaneous:				
			Total in USD ($)	**670**

Electronic Acknowledgement Receipt

EFS ID:	6728039
Application Number:	12649765
International Application Number:	
Confirmation Number:	6124
Title of Invention:	INK JET PRINTER AND METHOD FOR DEPOSITING A PROTECTIVE LAYER ON A SUBSTRATE
First Named Inventor/Applicant Name:	Edmond ABERGEL
Customer Number:	22429
Filer:	Allan M. Lowe/Christina Frye
Filer Authorized By:	Allan M. Lowe
Attorney Docket Number:	1013-070
Receipt Date:	30-DEC-2009
Filing Date:	
Time Stamp:	14:30:41
Application Type:	Utility under 35 USC 111(a)

Payment information:

Submitted with Payment	yes
Payment Type	Credit Card
Payment was successfully received in RAM	$670
RAM confirmation Number	550
Deposit Account	
Authorized User	

File Listing:

Document Number	Document Description	File Name	File Size(Bytes)/ Message Digest	Multi Part /.zip	Pages (if appl.)

1	Transmittal of New Application	2009-12-30ApplnXmtl.pdf	29549 f92faa54eb7dcc2a91583c14986819b2108445e3	no	1
Warnings:					
Information:					
2		2009-12-30SpecClmsAbst.pdf	100279 b56b250aefe334d15c387b491fbbca45d7a0b7bc	yes	20
	Multipart Description/PDF files in .zip description				
	Document Description		**Start**	**End**	
	Specification		1	15	
	Claims		16	19	
	Abstract		20	20	
Warnings:					
Information:					
3	Drawings-only black and white line drawings	2009-12-30Drawings.pdf	38500 bf312fb67444f2a0706ebfcb7c4b072d4af4696f	no	2
Warnings:					
Information:					
4	Application Data Sheet	2009-12-30ADS.pdf	47696 4fef75232bad2b3337cce3939e8c117eb23b9a9b	no	4
Warnings:					
Information:					
This is not an USPTO supplied ADS fillable form					
5	Information Disclosure Statement (IDS) Filed (SB/08)	2009-12-30IDS.pdf	39853 07ff1bf5f750ec0e01661cff19a0f120b0bd0277	no	5
Warnings:					
Information:					
This is not an USPTO supplied IDS fillable form					
6	Foreign Reference	EP1749670A1.pdf	491063 2e2c9f8a6d1ed88e2dc07dd35df64c11563fb7cb	no	9
Warnings:					
Information:					
7	Foreign Reference	EP1621260A1.pdf	1468228 6a29da28374448cf75b9489d847359e721ea9fce	no	24

Warnings:					
Information:					
8	Foreign Reference	EP1186410A2.pdf	1223753 af6930e872088fb72605b1c413b442a050500bea	no	19
Warnings:					
Information:					
9	Fee Worksheet (PTO-875)	fee-info.pdf	36701 c80b3ac5563a9dc38f50b4132a24203efe7fc209	no	2
Warnings:					
Information:					
		Total Files Size (in bytes):	3475622		

This Acknowledgement Receipt evidences receipt on the noted date by the USPTO of the indicated documents, characterized by the applicant, and including page counts, where applicable. It serves as evidence of receipt similar to a Post Card, as described in MPEP 503.

<u>New Applications Under 35 U.S.C. 111</u>
If a new application is being filed and the application includes the necessary components for a filing date (see 37 CFR 1.53(b)-(d) and MPEP 506), a Filing Receipt (37 CFR 1.54) will be issued in due course and the date shown on this Acknowledgement Receipt will establish the filing date of the application.

<u>National Stage of an International Application under 35 U.S.C. 371</u>
If a timely submission to enter the national stage of an international application is compliant with the conditions of 35 U.S.C. 371 and other applicable requirements a Form PCT/DO/EO/903 indicating acceptance of the application as a national stage submission under 35 U.S.C. 371 will be issued in addition to the Filing Receipt, in due course.

<u>New International Application Filed with the USPTO as a Receiving Office</u>
If a new international application is being filed and the international application includes the necessary components for an international filing date (see PCT Article 11 and MPEP 1810), a Notification of the International Application Number and of the International Filing Date (Form PCT/RO/105) will be issued in due course, subject to prescriptions concerning national security, and the date shown on this Acknowledgement Receipt will establish the international filing date of the application.

Commissioner for Patents
P.O. Box 1450
Alexandria, VA 22313-1450

ATTORNEY DOCKET NUMBER: 1013-070

Sir:

Transmitted herewith for filing is the Utility patent application of:

INVENTOR (S):	**Edmond ABERGEL**
FOR:	**INK JET PRINTER AND METHOD FOR DEPOSITING A PROTECTIVE LAYER ON A SUBSTRATE**

Enclosed are:

- ☒ 20 pages of Specification, Claims and Abstract
- ☒ 2 sheet(s) of formal drawings
- ☒ Application Data Sheet enclosed including Claim of Priority under 35 U.S.C. § 119
- ☒ Information Disclosure Statement - PTO/SB/08A and Reference(s)

The filing fee is calculated as shown below:

	NO. FILED		NO. EXTRA	RATE	AMOUNT
Total Claims	28	MINUS 20	8	x $26 =	$ 208.00
Independent Claims	2	MINUS 3	0	x $ 110 =	$ 0.00
If multiple dependent claims are presented, add $ 390.00					$ 0.00
Basic Fee					$ 82.00
Search Fee					$ 270.00
Examination Fee					$ 110.00
☒ Applicant claims small entity status. See 37 CFR 1.27. The fees indicated above are reduced by ½.					
Total of above calculations					$670.00
☐ Assignment and Recording Fee					$ 0.00
TOTAL FEE					$670.00

☒ Credit card authorization to cover the filing fees filed via EFS.

☒ The Commissioner is hereby authorized to charge any additional fees associated with this communication, including patent application filing fees and processing fees under 37 C.F.R. § 1.16 and 1.17, or credit any overpayment to **Deposit Account Number 07-1337**.

Kindly use the attorneys' address associated with the following Customer Number for future correspondence.

Customer No.
22429
PATENT TRADEMARK OFFICE

Respectfully submitted,

LOWE HAUPTMAN HAM & BERNER, LLP (22429)

/Allan M. Lowe/

Allan M. Lowe
Registration No. 19,641

1700 Diagonal Road, Suite 300
Alexandria, Virginia 22314
(703) 684-1111 AML/cjf
(703) 518-5499 Facsimile
Date: **December 30, 2009**

Ink Jet Printer and Method for Depositing a Protective Layer on a Substrate

RELATED APPLICATION

The present application is based on, and claims priority from, FR Application Number 08 07500, filed December 30, 2008, the disclosure of which is hereby incorporated by reference herein in its entirety.

FIELD OF INVENTION

The present invention relates to ink jet printers and methods for depositing a protective layer on a substrate and more particularly to such a printer and method wherein a voltage waveform particularly adapted to the ink is applied to a piezoelectric actuator for an ink jet nozzle arrangement. The protective layer is formed from a material referred to herein as a varnish or ink.

BACKGROUND ART

During printing, ink is deposited on the surface of a substrate, made, for example, of paper or plastic. It is then common to cover the printed surface of the substrate with a protective layer. This protective layer completes the fixation of the printed image on the substrate while protecting

the print against certain external aggressions such as projections, and/or light, heat and humidity. The protective layer is typically formed of an ink like material that enables creation of different visual effects by printing the ink like material as patterns on certain areas. Deposition of this protective layer on a printed substrate is generally performed by flexographic, offset, screen printing. It is also possible to customize the protective layer by causing some areas of the substrate to have varnish patterns and other areas to not have any varnish.

Patent application EP 1749670 relates to a digital ink jet machine for laying a coating with medium viscosity on a variable coating substrate by using ink jet nozzles including hollow needles set into vibration by a piezoelectric actuator adhesively bonded to a resonator including an assembly of the hollow needles. The size and the shape of a droplet of material (i.e., an ink or varnish) deposited by each nozzle on the surface of the substrate, depend on the duration and amplitude of an electric wave driving the actuator. However, such a device, if it is able to deposit varnish drops with medium or high viscosities (which are of the order of about a thousand centipoises), is not suitable for optimum ejection of varnishes with much lower viscosity.

A goal of the present invention is to overcome one or more drawbacks of the prior art by providing a suitable device for optimal deposition of a protective ink layer on a surface of a substrate independently of the ink viscosity and the substrate to be covered.

SUMMARY OF THE INVENTION

An aspect of the invention relates to a method of applying a protective layer to a substrate moving relative to an ink jet nozzle arrangement having a piezoelectric actuator, wherein the ink jet nozzle arrangement applies to the substrate ink droplets that form the protective coating. The method comprises controlling the shapes of the droplets by controlling the shape of an electric waveform applied to the piezoelectric

actuator. The shape of the electric waveform is controlled in response to at least one of the following parameters: viscosity of the ink droplets, temperature of the ink droplets, temperature of the substrate, desired thickness of the layer, type of substrate surface to which the droplets are applied, temperature of the substrate, and relative speed of the substrate and the ink jet nozzle array.

Another aspect of the invention relates to an apparatus for applying a protective layer to a substrate, wherein the apparatus comprises an ink jet nozzle arrangement having a piezoelectric actuator, and a transport mechanism for causing relative movement between the substrate and the ink jet nozzle arrangement. The ink jet nozzle arrangement is arranged for applying to the substrate droplets that form the protective coating. An electric source applies an electric waveform to the piezoelectric actuator. The waveform is arranged for controlling the shapes of the droplets. The electric source is arranged so the electric waveform has a shape determined by at least one of the following parameters: viscosity of the ink droplets, temperature of the ink droplets, temperature of the substrate, desired thickness of the layer, type of substrate surface to which the droplets are applied, temperature of the substrate, and relative speed of the substrate and the ink jet nozzle arrangement.

In one embodiment, a first polarity portion of the waveform has a rising portion with one or more intermediate plateaus, between a neutral potion of the waveform, where the nozzle is at rest, and a maximum plateau of the waveform where ink is expelled from the nozzle. The amplitude and duration of the intermediate plateau are determined by the ink viscosity. In another embodiment, the rising waveform portion has a duration and amplitude having an increasing continuous progression.

A memory of a control computer for the apparatus preferably includes at least one data base correlating at least one predefined temperature of the ink applied to the nozzle with the ink viscosity and /or with the composition of the ink to be deposited.

One type of ink includes a polymer photoinitiator, in which case a UV lamp is positioned downstream of the nozzles, to derive UV radiation that is incident on the ink applied to the substrate and having a wavelength and intensity to activate the photoinitiator.

Preferably an infrared drying lamp arrangement is positioned (1) to face the substrate and (2) upstream of the UV lamp to pre-dry and stretch ink deposited on the substrate. The optimum distance between the ink jet nozzles and the UV source depends on characteristics of the substrate and/or the composition of the deposited varnish.

At least one wavelength of the infrared lamp provides a pre-drying of the ink and optimum stretching of the ink on the substrate, depending on the characteristics of the substrate and/or the composition of the deposited ink.

Preferably, there are at least two infrared lamps for emitting IR radiation in different wavelength ranges. The respective power of each of the lamps is controlled and monitored by a device for managing a combination of radiations from the infrared lamps that pre-dry depending on the substrate on which the ink is deposited and/or on the composition of the deposited ink.

The substrate can be displaced before reaching at least one infrared lamp so the substrate is a determined distance from the at least one IR lamp, based on the substrate speed, the type of substrate on which the ink is deposited and/or of composition of the deposited ink.

It is also possible to provide a system for correcting at least one lateral shift of the printing by the device.

The invention with its characteristics and advantages will become more clearly apparent upon reading the description made with reference to the appended drawings.

BRIEF DESCRIPTION OF THE DRAWING

Fig. 1 is a top schematic view of a preferred embodiment of an ink jet device for applying a protective layer to a substrate, and

Fig. 2 is a diagram of an exemplary voltage waveform applied to the piezoelectric actuator of Fig. 1, for controlling the shape of ink droplets supplied by the ink-jet nozzles of Fig. 1 to form the protective layer on the substrate for expelling coverage ink, generated by the piezoelectric actuator of at least one nozzle of the printing device of the invention.

DETAILED DESCRIPTION OF THE DRAWING

In the present document, the terms of “covering ink”, “viscous product” and “varnish” are synonyms.

The apparatus of Fig. 1 is a printing device for depositing ink from ink container 36 onto the surface of substrate 23 independently of the viscosity of the ink. The deposited ink forms a protective layer for the substrate.

The printing device is controlled by computer 50 which controls different work stations and collects information from various sensors. These sensors, for example, provide information about the position of the substrates, information about the configuration of the substrates and validation information indicating whether an operation was properly or improperly performed, as well as conditions (particularly viscosity and temperature) of the ink. Computer 50 includes CPU 52 having interface 54 responsive to (1) key board 56 and (2) sensors 58 and 60 for the viscosity and temperature of the varnish flowing from container 36, respectively, as well as sensors 62 and 64 for the temperature and forward speed of substrate 23, respectively. Computer 50 also includes memory 66 which responds to signals gathered by interface 54 to derive various control signals that are supplied to the CPU, thence via interface 54 to various actuators and controllers.

The substrates awaiting printing (i.e., to have a protective layer deposited thereon) are placed in an input tray 22 having a capacity based on

the nature of the substrate and to the printing needs. In an exemplary embodiment, the input tray 22 accepts (at one time) several thousand substrates, each having a thickness up to 800 µm and variable sizes, for example between the format of a credit card up to an A0 format, and possibly including at least one face which is plastic. After the protective layer has been deposited, the substrates are stored in output tray 36, generally having the same capacity as the input tray. A device (not shown) for gripping the substrates extracts the substrates (e.g., substrate 23) from input tray 22 and positions the substrates on a conveyor belt 24 which is driven longitudinally by roller 26, in turn driven by motor 28 to displace the substrates along a working chain including several work stations.

The first work station is a sheet feeder 49 which indexes the substrate to position two reference edges relative to each other or for detecting a mark printed on the substrate. A sensor detects the information on positions and transmits the information to computer 50 via a wired or wireless network. This information stored in memory 66 is then be reused at other work stations driven by computer 50. Inspections are also carried out in order to detect the presence of a single substrate at each station of the conveyer.

The second work station 70 projects the ink which forms the protective layer on substrate 23. Second work station 70 includes ink container 36, pipes 40 and 42 and pump 38 for supplying the ink or varnish in container 36 under pressure to manifold 44 which distributes the ink to ink jet nozzles of nozzle array 46. Each nozzle of nozzle array 46 includes a passageway containing one of resistance heaters 45 and is vibrated by its individual piezoelectric actuator of actuator array 47. Manifold 44, nozzle array 46 and actuator array 47 extend between opposite edges of substrate 23 to enable the ink to form a protective coating across the entire width of the substrate. Alternatively, at a particular time, only some or none of actuators 47 apply energy to only some or none of the nozzles of array 46, as substrate 23 is moving past the nozzles, in which case, a protective coating is formed

on only a portion or portions of the substrate aligned with the nozzles that are responsive to energy from actuators 47. The centers of the nozzles of array 46 are typically spaced from each other by one tenth to several thousandths of a millimetre, preferably between 0.01 and 0.1 mm.

Non-limiting examples of inks in container 36 are varnish, scratch-off ink, conducting ink, printing ink or adhesive with typical average viscosities in the range of 100 to 1,000 centipoises, but which may have viscosities as low as about ten centipoises. Container 36 may be fed, for example, manually or automatically by a feeding circuit or semi-automatically by a device controlled by an operator. The outlet of container 36 is connected in fluid flow relation by pipe 40 to a pressurization device (pump) 38 which applies sufficient pressure to the material flowing from container 36 to nozzles 46 to enable the nozzles to operate properly. The pressurization device 38 therefore includes a detector (not shown) for monitoring and regulating the pressure of the ink sent towards nozzle 46; computer 50 can be part of this pressure regulation.

The area covered by the ink droplets is defined for each substrate by a parameterization file contained in memory 66 of computer 50. The file contains data relating to the shape of the substrate area to be covered, the position on the substrate relative to the marks on the substrate, and the amount of ink to be projected in each droplet. Memory 66 also has a software package for controlling the machine of figure 1 so the machine can exploit this information, and for expressing this information in parameters indicative of relative displacement of the substrate 23 and nozzle array 46, and of selective control of the nozzles of array 46, e.g., to control the shapes of the droplets, and of reiteration of the shifted passage of substrate 23 in front of nozzles of array 46 in order to produce joined lines if required.

Downstream of the projection station 70 is drying station or oven 34. Drying station 34 completely or partly dries the ink projected onto substrate 23 by nozzle array 46. The drying, depending on the applied ink, is achieved with infrared radiation in the case of an aqueous varnish or with a stream of heated air for an adhesive or a scratch-off ink or with UV depending on the

projected ink. After substrate 23 has been dried, some substrates are transferred to output tray 36, without the projected ink being transferred to other substrates or on the tray with which the substrate is in contact.

A protective varnish layer can be applied to a face of the substrate before or after printing. A protective varnish layer can, for example, occupy a quasi rectangular area on the substrate, the corners of which are rounded. A margin not covered with the protective layer can be left on the perimeter of the face of the substrate. A thermally re-activatable adhesive layer can be applied to an area of a substrate, according to a pattern that is, for example, a small rectangle rounded at its corners. Various patterns of scratch-off ink can be laid on other areas, and have various shapes, such as an arrow, a star or any other pattern including, in a non-limiting way, a contour formed of angles and straight and/or curved lines.

Two machines of the type illustrated in Fig. 1 can be provided for applying protective layers to different faces of a single substrate. One of the machines can be before printing, the other after printing. The ink containers of these two machines can be loaded with suitable inks so various patterns can be made on both faces of a substrate. These print materials are, for example, printed on areas protected by a varnish, a scratch-off ink or sized areas or a combination of these various possibilities on any face. Printing on the various faces is achieved by a reversal mechanism between a machine and the following or preceding machine.

With the piezoelectric control, it is possible to adjust the duration and intensity of the ink projected by nozzles of array 46 onto substrate 23. The protected areas are specified by data loaded into memory 66, which in turn activates interface 54 that controls piezoelectric actuator array 46 and nozzle array 46 to provide a digital process having accuracy of the order of 0.05 mm. The protective layer may therefore cover only a point or the whole surface of a substrate. The area of the protected layer is defined for each substrate by a file in memory 66 relating to the shape of the area, its position on the substrate relative to reference marks on the substrate, and the amount

of product to be projected. A software package in memory 66 controls the machine of figure 1 to exploit this information by expressing the information in parameters of relative displacement of substrate 23 and nozzle array 46, in parameters for selectively controlling the nozzles and in parameters for reiterating a shifted passage of the substrate in front of the nozzles in order to produce joined lines if required.

In other exemplary embodiments, the machine of Fig. 1 can be modified to include additional work stations which, for example, assemble various parts together, e.g., applying an adhesive on determined contact areas of the substrates.

Each of the ink-jet nozzles of array 46 is electro-acoustically driven by a piezoelectric actuator of array 47. The piezoelectric actuators are activated by a particular electric waveshape derived by electric source 80, in turn responsive to an output of interface 54 which indicates the shape of a voltage wave that source 80 applies to the piezoelectric actuators. The shape of the voltage wave and the droplet depend on the waveform information stored in memory 66 which is read out to electric source 80 in response to at least one of the following parameters: viscosity of the ink droplets, temperature of the ink droplets, temperature of the substrate, desired thickness of the layer, type of substrate surface to which the droplets are applied, temperature of the substrate, and relative speed of the substrate and the ink jet nozzle array.

The shape of the voltage wave which source 80 applies to actuator array 47 ensures expulsion of the correct quantity of ink and its deposition on substrate 23. The voltage wave (Fig. 2) has a rising portion 82 from a neutral voltage value 84, corresponding to a rest condition of a nozzle, to a peak positive value which forms a phase plateau 86. Plateau 86 corresponds with the ejection phase of the ink loaded in the nozzle. The intensity of the actuator of array 47 which drives the nozzle then changes in proportion to the voltage amplitude of plateau 86 above neutral value 84. During plateau 86 the volume of the nozzle expands by an amount proportional to the amplitude

of plateau 86; the expansion is for a period substantially equal to the duration of plateau 86 so that the diameter and duration of the droplet are controlled. As a result the droplet shape and therefore droplet volume are controlled.

The voltage derived by source 80 then has a polarity inversion 88 to a voltage having a negative polarity relative to neutral value 84. The negative polarity voltage has a plateau 90 having an amplitude and duration enabling the nozzle to be reloaded with ink from manifold 44. The duration and amplitude of both of plateaus 86 and 90 are usually the same and in the range of 1 to 100 microseconds and 5 to 100 volts (preferably 10 to 50 volts) to achieve optimum operation. According to a preferred embodiment, the duration of plateau 90, during which the ink is reloaded from manifold 44 into the nozzle, is equal to that of plateau 86, during which the ink is ejected from the nozzle. Upon completion of plateau 90, the voltage source has a rising edge 92 so the voltage source 80 returns to neutral value 84. Data stored in memory 66 are such that the amplitude and/or duration of plateaus 86 are greater for inks having high viscosity than for ink having low viscosity. As ink temperature increases the inks usually become less viscous, so that the data stored in memory 66 are such that as ink temperature increases there are decreases in the amplitude and/or duration of plateaus 86.

Rising voltage waveform portion 82 preferably has an intermediate amplitude at plateau 94 between the amplitudes of neutral value 84 and plateau 86. Plateau 94 enables the ink to be prepared for ejection before the actual expulsion during plateau 86. According to a particular embodiment, the voltage amplitude of intermediate plateau 94 is typically about one-half the voltage amplitude of plateau 86 and the duration of plateau 94 is in the range of 60 nanoseconds to 10 microseconds (preferably between 100 nanoseconds and 1 microsecond). The voltage amplitude and duration of plateau 94 depend on the viscosity of the ink so that increases in viscosity are accompanied by increases in voltage amplitude and duration of plateaus 94.. Plateau 94 enables reloading of the varnish in the nozzle by providing

pauses during the loading to avoid an upward flow of air into the nozzle from its expulsion orifice.

According to one embodiment, the rising portion 82 can have several intermediate plateaus for loading ink. The number, voltage amplitude and duration of each of these plateaus are a function of the ink viscosity. According to a particular embodiment, the succession of intermediate plateaus have progressively reduced durations, leading to the formation of an increasing, continuous and gradual loading of the varnish in the nozzle, which may have the aspect of a curve or of a straight line. Ideally, the varnish used has a viscosity from 4 to 100 mPa.s. According to another particularity, the voltage amplitude(s) of the plateau(s) are also determined by the type of detected substrate used during deposition by nozzles of the protective layer.

CPU 52 monitors and adjusts the values and durations of the different plateaus of the wave that source 80 derives and therefore of the shape of the ink droplet depending on at least one printing parameter, for example a characteristic of the substrate or of the ink intended to be deposited on the substrate surface. This characteristic may for example be the viscosity of the ink, as derived in detector 58; the temperature of the ink, as derived by detector 60 or of the substrate, as derived by detector 62; the type of surface on which the ink is projected (e.g., the stiffness and/or chemical composition of the substrate), the sought final quality; or the velocity of the substrate passing under the nozzle, as derived by detector 64. The outputs of one or more of detectors 58, 60, 62 and 64 can be supplied to interface 54 to provide partial or completely automatic control of the shape of the wave that source 80 derives. Alternatively, outputs of the detectors can be observed by an operator who loads them via keyboard 56 into memory 66 via interface 54. As a further alternative, the operator can, in certain instances, assume that viscosity and some other parameters will not be subject to change and enter predetermined values into memory 66 via keyboard 56. .

Memory 66 has one or more databases including information about the waveforms source 80 derives, such as the voltage amplitudes and durations of the plateau(s), the numbers of plateaus, and/or possible ratios of the heights of these plateaus, including the values of these characteristics which are correlated with one or more of the printing parameters. According to a preferred embodiment, the parameters which are mainly taken into account for regulating the foregoing characteristics of the waveforms are the viscosity and/or the composition of the ink used and/or of the substrate intended to be covered.

Each of the nozzles of array 46 includes a resistive heater 46 which is connected to temperature controller 96, in turn responsive to an output of interface 54 indicative of the ink viscosity. Consequently, the temperature of the ink drops is controlled and regulated, and is therefore based on its viscosity. A resistive heater 45 is housed in each of the nozzles of array 46 upstream of the ejection orifice of the nozzle. Memory 66 also has a database including at least one predefined temperature value for each resistive heater 45 to obtain a particular viscosity value of the ink at the outlet of the nozzle. This temperature value depends on the composition of the ink to be deposited, which is pre-recorded in memory 66. This correlation between a temperature value required for the resistive heater 45 and the composition of a particular ink can be obtained, for example, via memory 66 storing a table based on a mathematical function relating the viscosity of the ink having a determined composition to a temperature value. This temperature in the nozzles is typically between 10 and 50°C.

Memory 66 can be pre-programmed by an operator via keyboard 56 and interface 54 through which the operator defines the ink and/or the substrate used. Alternatively, information about the ink and/or substrate can be read into memory 66 in response to outputs of detectors 58-64 which conduct measurements enabling detection of one or more parameters required for selecting the shape or a characteristic of the waveform that source 80 derives. As a further alternative, memory 66 stores desired values

for the temperatures to which resistive heaters 54 heat the ink in the nozzles, so that the ink has a viscosity in a defined range or even at a particular value. Detectors 58 and 60 can be replaced by individual detectors in flow paths in manifold 44 leading directly to each of the nozzles in array 46 so the detectors are positioned immediately upstream of the resistive heater 45 in each nozzle relative to the direction of displacement of the ink in the printing nozzles. Positioning the temperature and viscosity detectors downstream of the resistive heaters 45 would only allow adjustment of the wave derived by source 80 after a first deposition of ink has already been carried out. Positioning the temperature and viscosity detectors upstream of the resistive heaters allows adjustments of the wave derived by source 80 without the need of carrying out a first "test" deposition of ink.

The printing device of Fig. 1 is likely to employ inks which include in their composition at least one photo-initiator for activating polymerization of the ink. Such photoinitiators are generally activated by radiation having one or more particular wavelengths which cause formation of one or more free radicals. The activating wavelengths are typically of ultraviolet (UV) radiation. The machine of Fig. 1 therefore includes one or more UV lamps 32 located downstream of the printing nozzles of array 47 in the displacement direction of substrate 23. Preferentially, the wavelengths of the UV lamp are of the order of 200-400 nm. The wavelength depends on the type of photo-initiator(s) in the composition of the ink deposited on substrate 23.

The printing device of figure 1also comprises a drying station 34 with one or more infrared (IR) radiation lamps which carry out pre-drying of the deposited ink. Drying station 34 is downstream of nozzle array 46 and upstream of UV source 34 at a position determined by the expected forward speed of substrate 23. Station 34 is transversely spaced from the substrate at predefined optimum distance depending on at least one characteristic of the deposited ink and on the type of substrate to be covered. These pre-drying parameters are stored in a memory 66.

The IR lamps of drying station 34 have emissions in different wavelength regions. The power for each of the lamps is controlled and regulated by a device adapted for managing the combination of the radiations of the lamps. The managing device is associated with CPU 50 and memory 66 that includes programming of the radiation specific to each lamp depending on the type of covered substrate and/or at least one characteristic of the deposited ink. According to a particular embodiment, the lamps of drying station 34 irradiate the substrate with wavelengths between 0.5 and 8 µm.

If station 34 derives a pair of wavelengths, short wavelengths, between 0.5 and 3.2 µm, and medium wavelengths, between 1.6 and 8 µm, are incident on substrate 23. The combination of the wavelengths for a substrate of the printed paper type relies on a power of the order of 100% for the medium wavelengths and on a power of the order of 50% for the short wavelengths. Also, the combination of IR wavelengths for a plastic type substrate requires a power of the order of 80% for medium wavelengths and on very low or even zero power for short wavelengths.

Fig. 1 also includes a system 98 for checking the plotting of the areas intended to be printed. System 98, which includes a readout station (not shown) which reads and determines the position of the areas to be covered, is driven by electromechanical processes so that a rectification guide follows a rectification line and ensures substantially perfect location between the printed substrate and a new printed area. This rectification line has a strong contrast, is ideally black, and printed with the printing pattern of the substrate, that is, so-called background printing. The readout station uses this rectification line as a reference for computing a side shift relative to the direction of displacement of the substrate relative to the nozzles which deposit the ink. From the measured shift, the rectification guide corrects the trajectory by modifying it accordingly so that the rectification line remains strictly centred with the readout system.

It should be obvious for persons skilled in the art that the present invention allows embodiments under many other specific forms without departing from the field of application of the invention as claimed. Therefore, the present embodiments have to be considered as an illustration but they may be modified within the field defined by the scope of the appended claims. For example, the ink-jet nozzle arrangement can be one or more ink-jet nozzles that scan from edge to edge or the illustrated stationary array of ink-jet nozzles.

CLAIMS

1. A method of applying a protective layer to a substrate moving relative to an ink jet nozzle arrangement having a piezoelectric actuator, the ink jet nozzle arrangement applying to the substrate ink droplets that form the protective coating, the method comprising controlling the shapes of the droplets by controlling the shape of an electric waveform applied to the piezoelectric actuator, controlling the shape of the electric waveform in response to at least one of the following parameters: viscosity of the ink droplets, temperature of the ink droplets, temperature of the substrate, desired thickness of the layer, type of substrate surface to which the droplets are applied, and relative speed of the substrate and the ink jet nozzle array.

2. The method of claim 1 wherein the parameter includes viscosity of the ink droplets.

3. The method of claim 2 wherein the viscosity of the ink droplets is determined by detecting the viscosity of the ink as the ink flows to the nozzle.

4. The method of claim 1 wherein the parameter includes temperature of the ink droplets.

5. The method of claim 1 wherein the parameter includes temperature of the substrate.

6. The method of claim 1 wherein the parameter includes thickness of the layer.

7. The method of claim 1 wherein the parameter includes relative speed of the substrate and the ink jet array.

8. The method of claim 1 wherein the parameter includes type of substrate surface to which the droplets are applied.

9. The method of claim 8 wherein the substrate surface type parameter includes chemical composition of the substrate.

10. The method of claim 8 wherein the substrate surface type parameter includes stiffness of the substrate.

11. The method of claim 8 wherein the waveform has (a) neutral value associated with the nozzle arrangement being at rest, (b) a first polarity relative to the neutral value for causing the nozzle arrangement to have a volume greater than the neutral value, and (c) a second polarity relative to the neutral value for causing the nozzle arrangement to have a volume less than the neutral value; the waveform first polarity having an intermediate substantially constant amplitude between the neutral value and a peak value, each peak value causing a droplet to be expelled from the nozzle arrangement, the intermediate value having an amplitude and/or duration dependent on the viscosity of the ink droplet.

12. The method of claim 1 further including maintaining the temperature of the droplets at a predetermined temperature.

13. The method of claim 1 wherein the ink includes a photoinitiator and further including irradiating the ink applied to the substrate with radiation that activates the photoinitiator.

14. Apparatus for applying a protective layer to a substrate comprising an ink jet nozzle arrangement having a piezoelectric actuator, a transport mechanism for causing relative movement between the substrate and the ink jet nozzle arrangement, the ink jet nozzle arrangement being arranged for applying to the substrate droplets that form the protective coating; an electric source for applying an electric waveform to the piezoelectric actuator, the waveform being arranged for controlling the shapes of the droplets, the electric source being arranged so the electric waveform has a shape determined by at least one of the following parameters: viscosity of the ink droplets, temperature of the ink droplets, temperature of the substrate, desired thickness of the layer, type of substrate surface to which the droplets are applied, and relative speed of the substrate and the ink jet nozzle arrangement.

15. The apparatus of claim 14 wherein the parameter includes viscosity of the ink droplets.

16. The apparatus of claim 15 further including a detector for detecting the viscosity of the ink as the ink flows to the nozzle.

17. The apparatus of claim 14 wherein the parameter includes temperature of the ink droplets, and further including a detector for detecting temperature of the ink droplets .

18. The apparatus of claim 17 wherein the parameter includes temperature of the substrate, and further including a detector for detecting temperature of the substrate..

19. The apparatus of claim 14 wherein the parameter includes desired thickness of the layer.

20. The apparatus of claim 14 wherein the parameter includes relative speed of the substrate and the ink jet array.

21. The apparatus of claim 14 wherein the parameter includes type of substrate surface to which the droplets are applied.

22. The apparatus of claim 21 wherein the substrate surface type parameter includes chemical composition of the substrate.

23. The apparatus of claim 14 wherein the substrate surface type parameter includes stiffness of the substrate.

24. The apparatus of claim 14 wherein the waveform has (a) neutral value associated with the nozzle arrangement being at rest, (b) a first polarity relative to the neutral value for causing the nozzle arrangement to have a volume greater than the neutral value, and (c) a second polarity relative to the neutral value for causing the nozzle arrangement to have a volume less than the neutral value; the waveform first polarity having an intermediate substantially constant amplitude between the neutral value and a peak value, each peak value causing a droplet to be expelled from the nozzle arrangement, the intermediate value having an amplitude and/or duration dependent on the viscosity of the ink droplet.

25. The apparatus of claim 14 further including a temperature detector for the ink flowing to the ink jet nozzle arrangement, and a temperature controller responsive to the temperature detector, the temperature controller being arranged for controlling the temperature of the ink flowing in the ink jet nozzle arrangement.

26. The apparatus of claim 14 further including a memory storing information associated with the shapes of a plurality of the waveforms, an interface for controlling readout of said information in the memory in response to at least one of the parameters being entered into the interface, and a controller arranged to be responsive to the information readout of said memory for controlling the electric source for causing the electric source to derive a waveform having a shape determined by the readout information.

27. The apparatus of claim 26 wherein the interface includes an operator memory interface for enabling an operator to enter at least one of the parameters into the interface.

28. The apparatus of claim 26 wherein the interface includes a detector machine interface for enabling a detector arrangement for at least one of the following parameters to enter at least one of the following parameters into the interface; viscosity of the ink droplets, temperature of the ink droplets, temperature of the substrate, and relative speed of the substrate and the ink jet nozzle arrangement.

.

ABSTRACT

A protective layer is applied to a substrate moving relative to an ink jet nozzle array. Each nozzle responds to a piezoelectric actuator. Shapes of ink droplets deposited by the nozzles on the substrate, to form the protective layer, are controlled by shapes of electric waveforms applied to the actuators. Shapes of the waveforms respond to at least one of: droplet viscosity and temperature, temperature of the substrate, desired thickness of the layer, type of substrate surface to which the droplets are applied, and relative speed of the substrate and the ink jet nozzle array.

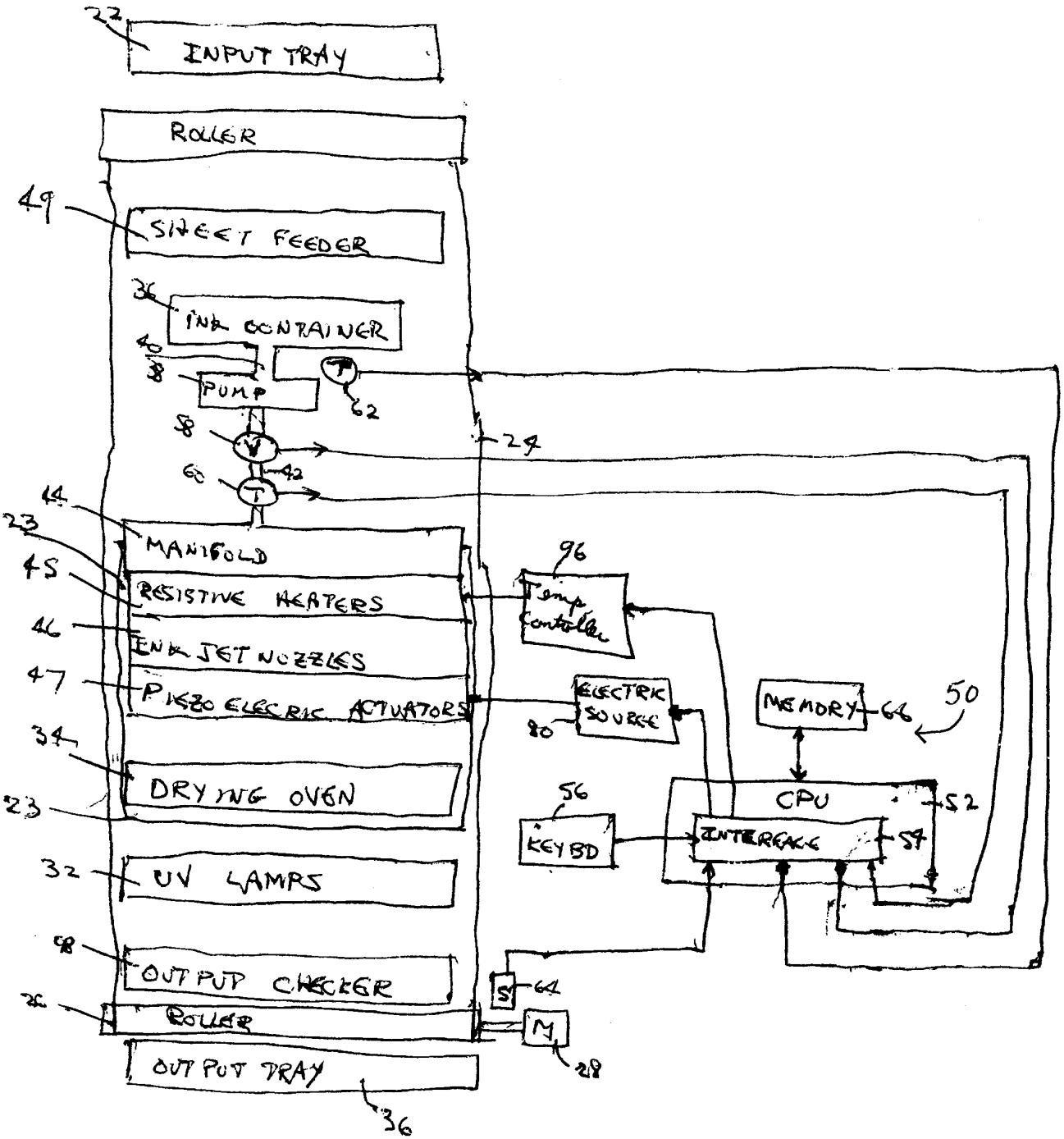
22
INPUT TRAY
ROLLER
49
SHEET FEEDER
36
INK CONTAINER
40
38
PUMP
T
62
58
V
24
60
42
T
14
23
MANIFOLD
45
RESISTIVE HEATERS
46
INK JET NOZZLES
47
PIEZO ELECTRIC ACTUATORS
34
DRYING OVEN
23
32
UV LAMPS
68
OUTPUT CHECKER
26
ROLLER
OUTPUT TRAY
36
96
Temp Controller
ELECTRIC SOURCE
80
MEMORY
66
50
56
KEYBD
CPU
52
INTERFACE
54
S
64
M
28

Fig. 1

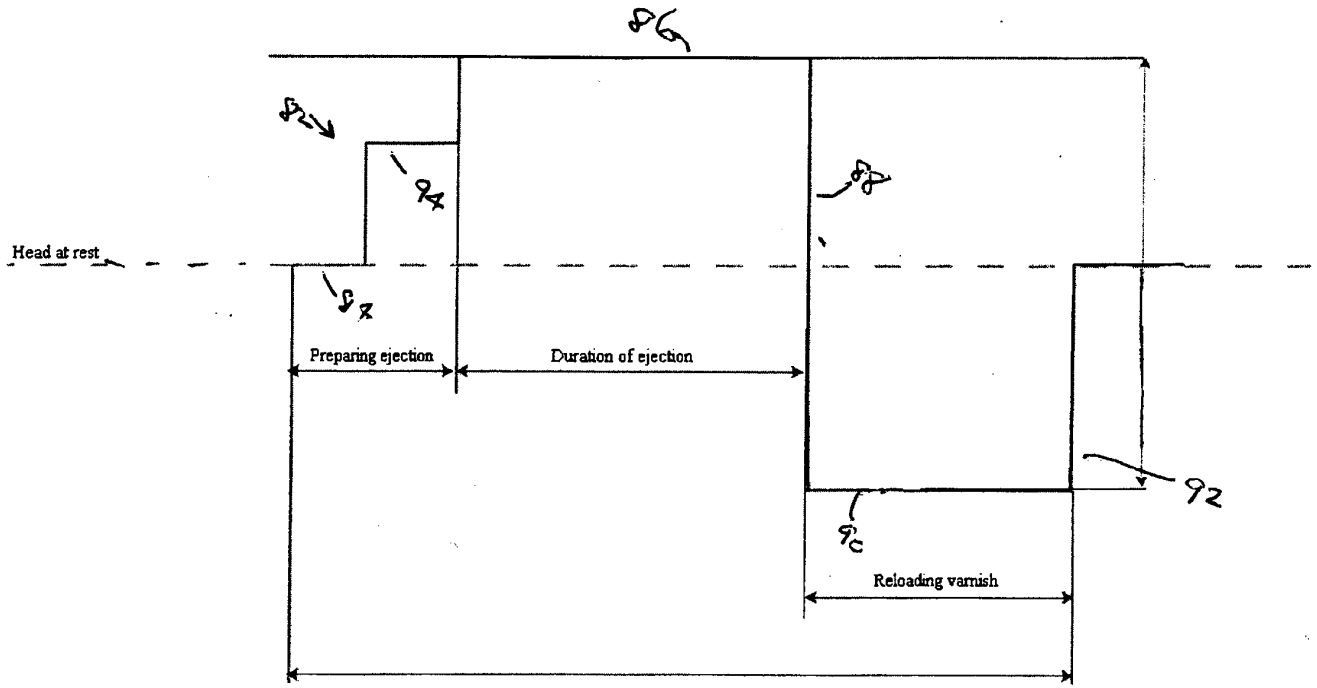
Head at rest
Preparing ejection
Duration of ejection
Reloading varnish

Fig. 2

PTO/SB/14 (08-05)
Approved for use through 07/31/2006. OMB 0651-0032
U.S. Patent and Trademark Office; U.S. DEPARTMENT OF COMMERCE
Under the Paperwork Reduction Act of 1995, no persons are required to respond to a collection of information unless it contains a valid OMB control number.

Application Data Sheet 37 CFR 1.76	Attorney Docket Number	1013-070
	Application Number	
Title of Invention	INK JET PRINTER AND METHOD FOR DEPOSITING A PROTECTIVE LAYER ON A SUBSTRATE	

The application data sheet is part of the provisional or nonprovisional application for which it is being submitted. The following form contains the bibliographic data arranged in a format specified by the United States Patent and Trademark Office as outlined in 37 CFR 1.76.
This document may be completed electronically and submitted to the Office in electronic format using the Electronic Filing System (EFS) or the document may be printed and included in a paper filed application.

Secrecy Order 37 CFR 5.2

☐ Portions or all of the application associated with this Application Data Sheet may fall under a Secrecy Order pursuant to 37 CFR 5.2 (Paper filers only. Applications that fall under Secrecy Order may not be filed electronically.)

Applicant Information:

Applicant 1

Applicant Authority ◉ Inventor ◯ Legal Representative under 35 U.S.C. 117 ◯ Party of Interest under 35 U.S.C. 118

Prefix	**Given Name**	**Middle Name**	**Family Name**	**Suffix**
	Edmond		ABERGEL	

Residence Information (Select One) ◯ US Residency ◉ Non US Residency ◯ Active US Military Service

City	Paris	**Country Of Residence** i	FR
Citizenship under 37 CFR 1.41(b) i	FR		

Mailing Address of Applicant:

Address 1	86, Cours de Vincennes		
Address 2			
City	Paris	**State/Province**	
Postal Code	75012	**Country** i	FR

All Inventors Must Be Listed - Additional Inventor Information blocks may be generated within this form by selecting the **Add** button. Add

Correspondence Information:

Enter either Customer Number or complete the Correspondence Information section below.
For further information see 37 CFR 1.33(a).

☐ **An Address is being provided for the correspondence Information of this application.**

Customer Number	22429		
Email Address		Add Email	Remove Email

Application Information:

Title of the Invention	INK JET PRINTER AND METHOD FOR DEPOSITING A PROTECTIVE LAYER ON A SUBSTRATE		
Attorney Docket Number	1013-070	**Small Entity Status Claimed**	☒
Application Type	Nonprovisional		
Subject Matter	Utility		
Suggested Class (if any)		**Sub Class (if any)**	
Suggested Technology Center (if any)			
Total Number of Drawing Sheets (if any)	2	**Suggested Figure for Publication (if any)**	

PTO/SB/14 (08-05)
Approved for use through 07/31/2006. OMB 0651-0032
U.S. Patent and Trademark Office; U.S. DEPARTMENT OF COMMERCE
Under the Paperwork Reduction Act of 1995, no persons are required to respond to a collection of information unless it contains a valid OMB control number.

Application Data Sheet 37 CFR 1.76	Attorney Docket Number	1013-070
	Application Number	
Title of Invention	INK JET PRINTER AND METHOD FOR DEPOSITING A PROTECTIVE LAYER ON A SUBSTRATE	

Publication Information:	
☐	Request Early Publication (Fee required at time of Request 37 CFR 1.219)
☐	Request Not to Publish. I hereby request that the attached application not be published under 35 U.S.C. 122(b) and certify that the invention disclosed in the attached application has not been and will not be the subject of an application filed in another country, or under a multilateral agreement, that requires publication at eighteen months after filing.

Representative Information:

Representative information should be provided for all practitioners having a power of attorney in the application. Providing this information in the Application Data Sheet does not constitute a power of attorney in the application (see 37 CFR 1.32).
Enter either Customer Number or complete the Representative Name section below. If both sections are completed the Customer Number will be used for the Representative Information during processing.

Please Select One:	◉ Customer Number	○ US Patent Practitioner	○ US Representative (37 CFR 11.9)
Customer Number	22429		

Domestic Priority Information:

This section allows for the applicant to claim benefit under 35 U.S.C. 119(e), 120, 121, or 365(c). Providing this information in the application data sheet constitutes the specific reference required by 35 U.S.C. 119(e) or 120, and 37 CFR 1.78(a)(2) or CFR 1.78(a)(4), and need not otherwise be made part of the specification.

Prior Application Status			Remove
Application Number	Continuity Type	Prior Application Number	Filing Date (YYYY-MM-DD)

Additional Domestic Priority Data may be generated within this form by selecting the **Add** button.

Foreign Priority Information:

This section allows for the applicant to claim benefit of foreign priority and to identify any prior foreign application for which priority is not claimed. Providing this information in the application data sheet constitutes the claim for priority as required by 35 U.S.C. 119(b) and 37 CFR 1.55(a).

			Remove
Application Number	Country[i]	Parent Filing Date (YYYY-MM-DD)	Priority Claimed
08 07500	FR	2008-12-30	◉ Yes ○ No

Additional Foreign Priority Data may be generated within this form by selecting the **Add** button.

Assignee Information:

Providing this information in the application data sheet does not substitute for compliance with any requirement of part 3 of Title 37 of the CFR to have an assignment recorded in the Office.

Assignee 1

If the Assignee is an Organization check here. ☒

PTO/SB/14 (08-05)
Approved for use through 07/31/2006. OMB 0651-0032
U.S. Patent and Trademark Office; U.S. DEPARTMENT OF COMMERCE
Under the Paperwork Reduction Act of 1995, no persons are required to respond to a collection of information unless it contains a valid OMB control number.

Application Data Sheet 37 CFR 1.76	Attorney Docket Number	1013-070
	Application Number	
Title of Invention	INK JET PRINTER AND METHOD FOR DEPOSITING A PROTECTIVE LAYER ON A SUBSTRATE	

Organization Name	M.G.I. USA, Inc.		
Mailing Address Information:			
Address 1	3143 Skyway Circle		
Address 2			
City	Melbourne	**State/Province**	FL
Country	US	Postal Code	32934
Phone Number		Fax Number	
Email Address			
Additional Assignee Data may be generated within this form by selecting the **Add** button.			

Signature:

A signature of the applicant or representative is required in accordance with 37 CFR 1.33 and 10.18. Please see 37 CFR 1.4(d) for the form of the signature.					
Signature	/Allan M. Lowe/			Date (YYYY-MM-DD)	2009-12-30
First Name	Allan	Last Name	Lowe	Registration Number	19641

This collection of information is required by 37 CFR 1.76. The information is required to obtain or retain a benefit by the public which is to file (and by the USPTO to process) an application. Confidentiality is governed by 35 U.S.C. 122 and 37 CFR 1.14. This collection is estimated to take 23 minutes to complete, including gathering, preparing, and submitting the completed application data sheet form to the USPTO. Time will vary depending upon the individual case. Any comments on the amount of time you require to complete this form and/or suggestions for reducing this burden, should be sent to the Chief Information Officer, U.S. Patent and Trademark Office, U.S. Department of Commerce, P.O. Box 1450, Alexandria, VA 22313-1450. DO NOT SEND FEES OR COMPLETED FORMS TO THIS ADDRESS. **SEND TO: Commissioner for Patents, P.O. Box 1450, Alexandria, VA 22313-1450.**

Privacy Act Statement

The Privacy Act of 1974 (P.L. 93-579) requires that you be given certain information in connection with your submission of the attached form related to a patent application or patent. Accordingly, pursuant to the requirements of the Act, please be advised that: (1) the general authority for the collection of this information is 35 U.S.C. 2(b)(2); (2) furnishing of the information solicited is voluntary; and (3) the principal purpose for which the information is used by the U.S. Patent and Trademark Office is to process and/or examine your submission related to a patent application or patent. If you do not furnish the requested information, the U.S. Patent and Trademark Office may not be able to process and/or examine your submission, which may result in termination of proceedings or abandonment of the application or expiration of the patent.

The information provided by you in this form will be subject to the following routine uses:

1. The information on this form will be treated confidentially to the extent allowed under the Freedom of Information Act (5 U.S.C. 552) and the Privacy Act (5 U.S.C. 552a). Records from this system of records may be disclosed to the Department of Justice to determine whether the Freedom of Information Act requires disclosure of these records.

2. A record from this system of records may be disclosed, as a routine use, in the course of presenting evidence to a court, magistrate, or administrative tribunal, including disclosures to opposing counsel in the course of settlement negotiations.

3. A record in this system of records may be disclosed, as a routine use, to a Member of Congress submitting a request involving an individual, to whom the record pertains, when the individual has requested assistance from the Member with respect to the subject matter of the record.

4. A record in this system of records may be disclosed, as a routine use, to a contractor of the Agency having need for the information in order to perform a contract. Recipients of information shall be required to comply with the requirements of the Privacy Act of 1974, as amended, pursuant to 5 U.S.C. 552a(m).

5. A record related to an International Application filed under the Patent Cooperation Treaty in this system of records may be disclosed, as a routine use, to the International Bureau of the World Intellectual Property Organization, pursuant to the Patent Cooperation Treaty.

6. A record in this system of records may be disclosed, as a routine use, to another federal agency for purposes of National Security review (35 U.S.C. 181) and for review pursuant to the Atomic Energy Act (42 U.S.C. 218(c)).

7. A record from this system of records may be disclosed, as a routine use, to the Administrator, General Services, or his/her designee, during an inspection of records conducted by GSA as part of that agency's responsibility to recommend improvements in records management practices and programs, under authority of 44 U.S.C. 2904 and 2906. Such disclosure shall be made in accordance with the GSA regulations governing inspection of records for this purpose, and any other relevant (i.e., GSA or Commerce) directive. Such disclosure shall not be used to make determinations about individuals.

8. A record from this system of records may be disclosed, as a routine use, to the public after either publication of the application pursuant to 35 U.S.C. 122(b) or issuance of a patent pursuant to 35 U.S.C. 151. Further, a record may be disclosed, subject to the limitations of 37 CFR 1.14, as a routine use, to the public if the record was filed in an application which became abandoned or in which the proceedings were terminated and which application is referenced by either a published application, an application open to public inspections or an issued patent.

9. A record from this system of records may be disclosed, as a routine use, to a Federal, State, or local law enforcement agency, if the USPTO becomes aware of a violation or potential violation of law or regulation.

PTO/SB/06 (12-04)

Filing Date: **12/30/09**

Approved for use through 7/31/2006. OMB 0651-0032
U.S. Patent and Trademark Office; U.S. DEPARTMENT OF COMMERCE

Under the Paperwork Reduction Act of 1995, no persons are required to respond to a collection of information unless it displays a valid OMB control number.

PATENT APPLICATION FEE DETERMINATION RECORD

Substitute for Form PTO-875

Application or Docket Number: 12/649,765

APPLICATION AS FILED – PART I

FOR	(Column 1) NUMBER FILED	(Column 2) NUMBER EXTRA	SMALL ENTITY RATE ($)	SMALL ENTITY FEE ($)	OR	OTHER THAN SMALL ENTITY RATE ($)	OTHER THAN SMALL ENTITY FEE ($)
BASIC FEE (37 CFR 1.16(a), (b), or (c))	N/A	N/A	N/A	82		N/A	
SEARCH FEE (37 CFR 1.16(k), (i), or (m))	N/A	N/A	N/A	270		N/A	
EXAMINATION FEE (37 CFR 1.16(o), (p), or (q))	N/A	N/A	N/A	110		N/A	
18 (37 CFR 1.16(i))	28	8	26	208	OR	52	
INDEPENDENT CLAIMS (37 CFR 1.16(h))	2		110			220	
APPLICATION SIZE FEE (37 CFR 1.16(s))	If the specification and drawings exceed 100 sheets of paper, the application size fee due is $250 ($125 for small entity) for each additional 50 sheets or fraction thereof. See 35 U.S.C. 41(a)(1)(G) and 37 CFR 1.16(s).						
MULTIPLE DEPENDENT CLAIM PRESENT (37 CFR 1.16(j))			180			360	
			TOTAL	670		TOTAL	0

* If the difference in column 1 is less than zero, enter "0" in column 2.

APPLICATION AS AMENDED – PART II

AMENDMENT A

	(Column 1) CLAIMS REMAINING AFTER AMENDMENT		(Column 2) HIGHEST NUMBER PREVIOUSLY PAID FOR	(Column 3) PRESENT EXTRA	SMALL ENTITY RATE ($)	SMALL ENTITY ADDI-TIONAL FEE ($)	OR	OTHER THAN SMALL ENTITY RATE ($)	OTHER THAN SMALL ENTITY ADDI-TIONAL FEE ($)
Total (37 CFR 1.16(i))	*	Minus	**	=	x =		OR	x =	
Independent (37 CFR 1.16(h))	*	Minus	***	=	x =		OR	x =	
Application Size Fee (37 CFR 1.16(s))									
FIRST PRESENTATION OF MULTIPLE DEPENDENT CLAIM (37 CFR 1.16(j))					N/A		OR	N/A	
					TOTAL ADD'T FEE		OR	TOTAL ADD'T FEE	

AMENDMENT B

	(Column 1) CLAIMS REMAINING AFTER AMENDMENT		(Column 2) HIGHEST NUMBER PREVIOUSLY PAID FOR	(Column 3) PRESENT EXTRA	RATE ($)	ADDI-TIONAL FEE ($)	OR	RATE ($)	ADDI-TIONAL FEE ($)
Total (37 CFR 1.16(i))	*	Minus	**	=	x =		OR	x =	
Independent (37 CFR 1.16(h))	*	Minus	***	=	x =		OR	x =	
Application Size Fee (37 CFR 1.16(s))									
FIRST PRESENTATION OF MULTIPLE DEPENDENT CLAIM (37 CFR 1.16(j))					N/A		OR	N/A	
					TOTAL ADD'T FEE		OR	TOTAL ADD'T FEE	

* If the entry in column 1 is less than the entry in column 2, write "0" in column 3.

** If the "Highest Number Previously Paid For" IN THIS SPACE is less than 20, enter "20".

*** If the "Highest Number Previously Paid For" IN THIS SPACE is less than 3, enter "3".

The "Highest Number Previously Paid For" (Total or Independent) is the highest number found in the appropriate box in column 1.

This collection of information is required by 37 CFR 1.16. The information is required to obtain or retain a benefit by the public which is to file (and by the USPTO to process) an application. Confidentiality is governed by 35 U.S.C. 122 and 37 CFR 1.14. This collection is estimated to take 12 minutes to complete, including gathering, preparing, and submitting the completed application form to the USPTO. Time will vary depending upon the individual case. Any comments on the amount of time you require to complete this form and/or suggestions for reducing this burden, should be sent to the Chief Information Officer, U.S. Patent and Trademark Office, U.S. Department of Commerce, P.O. Box 1450, Alexandria, VA 22313-1450. DO NOT SEND FEES OR COMPLETED FORMS TO THIS ADDRESS. **SEND TO: Commissioner for Patents, P.O. Box 1450, Alexandria, VA 22313-1450.**

If you need assistance in completing the form, call 1-800-PTO-9199 and select option 2.