US 20030067424A1

(19) United States

(12) Patent Application Publication

(10) Pub. No.: US 2003/0067424 A1

(43) Pub. Date: Apr. 10, 2003

Akimoto et al.

(54) IMAGE DISPLAY DEVICE

(76) Inventors: **Hajime Akimoto**, Ome (JP); **Yoshirou Mikami**, Hitachiota (JP); **Kiyoshige Kinugawa**, Mutsuzawa (JP); **Shigeyuki Nishitani**, Mobara (JP); **Takeo Shiba**, Kodaira (JP)

Correspondence Address:
REED SMITH LLP
Suite 1400
3110 Fairview Park Drive
Falls Church, VA 22042 (US)

(21) Appl. No.: **10/212,046**

(22) Filed: **Aug. 6, 2002**

(30) **Foreign Application Priority Data**

Oct. 10, 2001 (JP) P2001-312116

Publication Classification

(51) **Int. Cl.**[7] **G09G 3/20**

(52) **U.S. Cl.** **345/55**

(57) **ABSTRACT**

The invention provides an image display device that has an especially satisfactory display quality for animated images, and sufficiently suppresses the irregularities of display quality among pixels. The image display device includes a light emitting drive means that drives a light emitting means, based on an analog display signal inputted to the pixels, and a light emitting control switch for controlling a light-on or light-off of the light emitting means on one end of the light emitting drive means in each pixel.

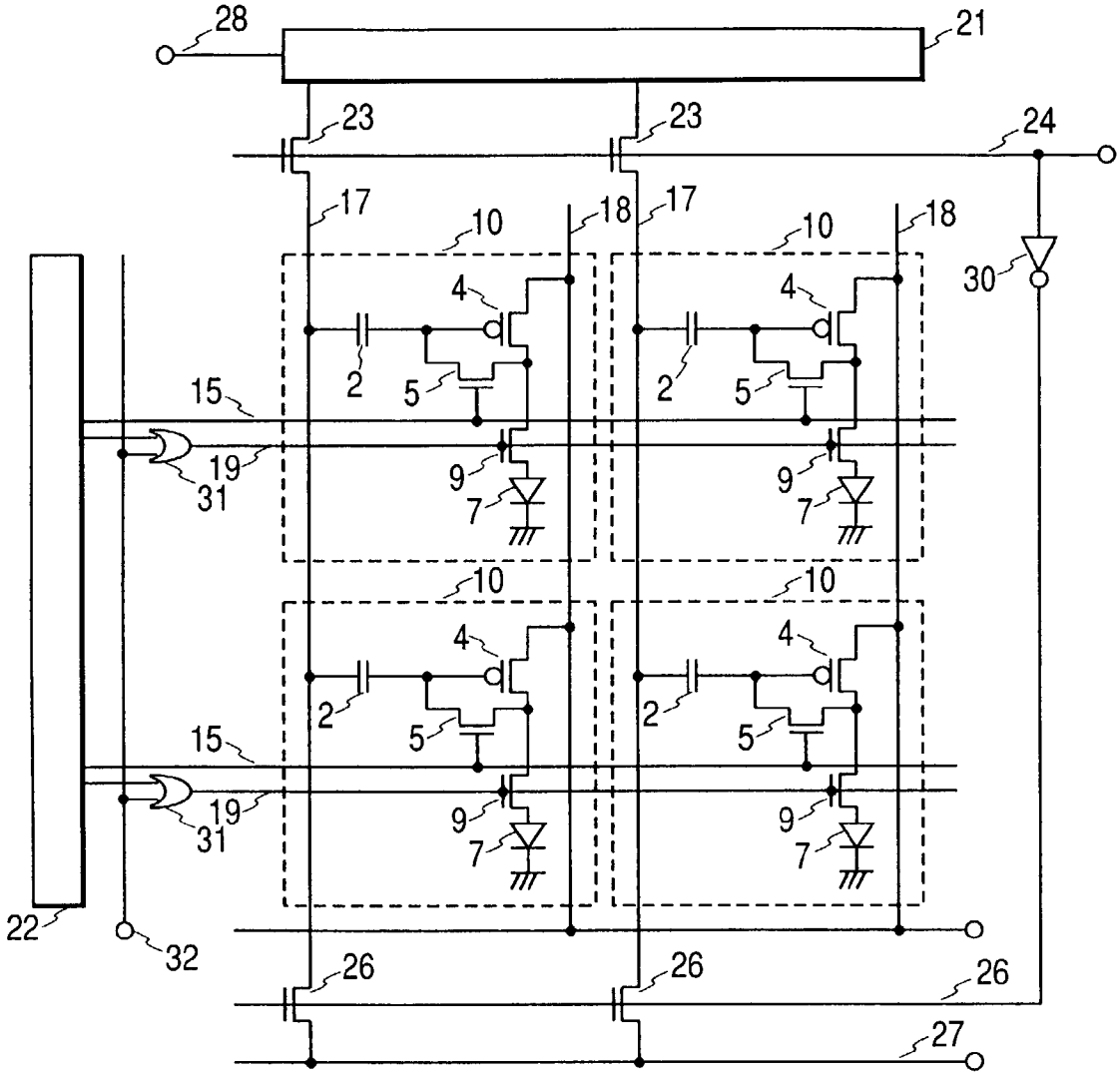

FIG. 1

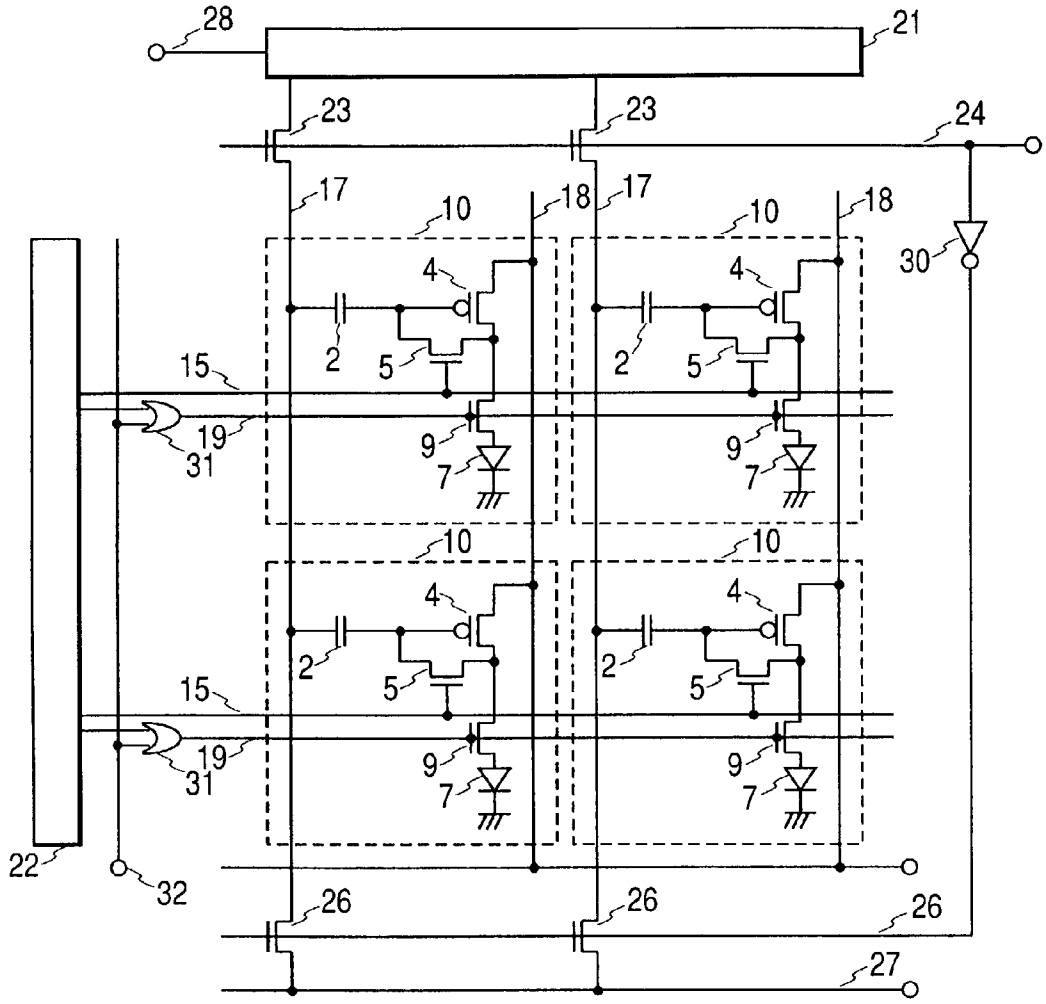
28
21
23
23
24
17
10
18
17
10
18
30
4
4
2
5
2
5
15
19
31
9
7
9
7
10
10
4
4
2
5
2
5
15
19
31
9
7
9
7
22
32
26
26
26
27

FIG. 2

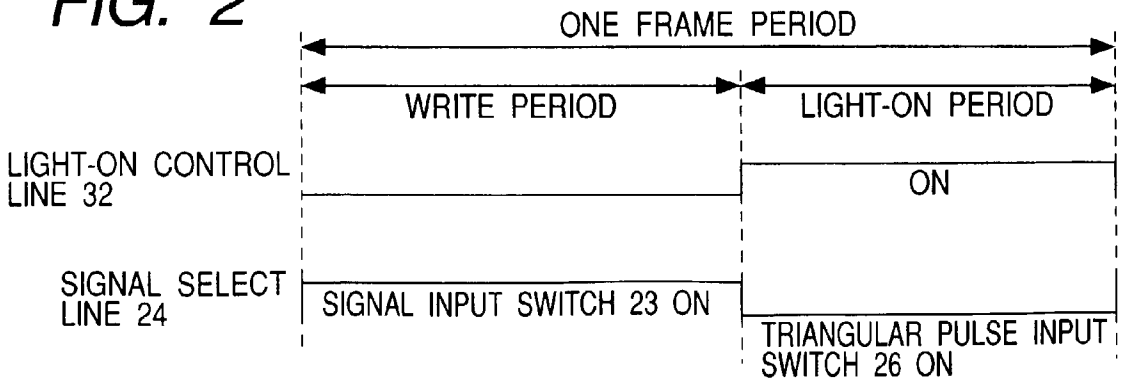
ONE FRAME PERIOD
WRITE PERIOD
LIGHT-ON PERIOD
LIGHT-ON CONTROL LINE 32
ON
SIGNAL SELECT LINE 24
SIGNAL INPUT SWITCH 23 ON
TRIANGULAR PULSE INPUT SWITCH 26 ON

FIG. 3

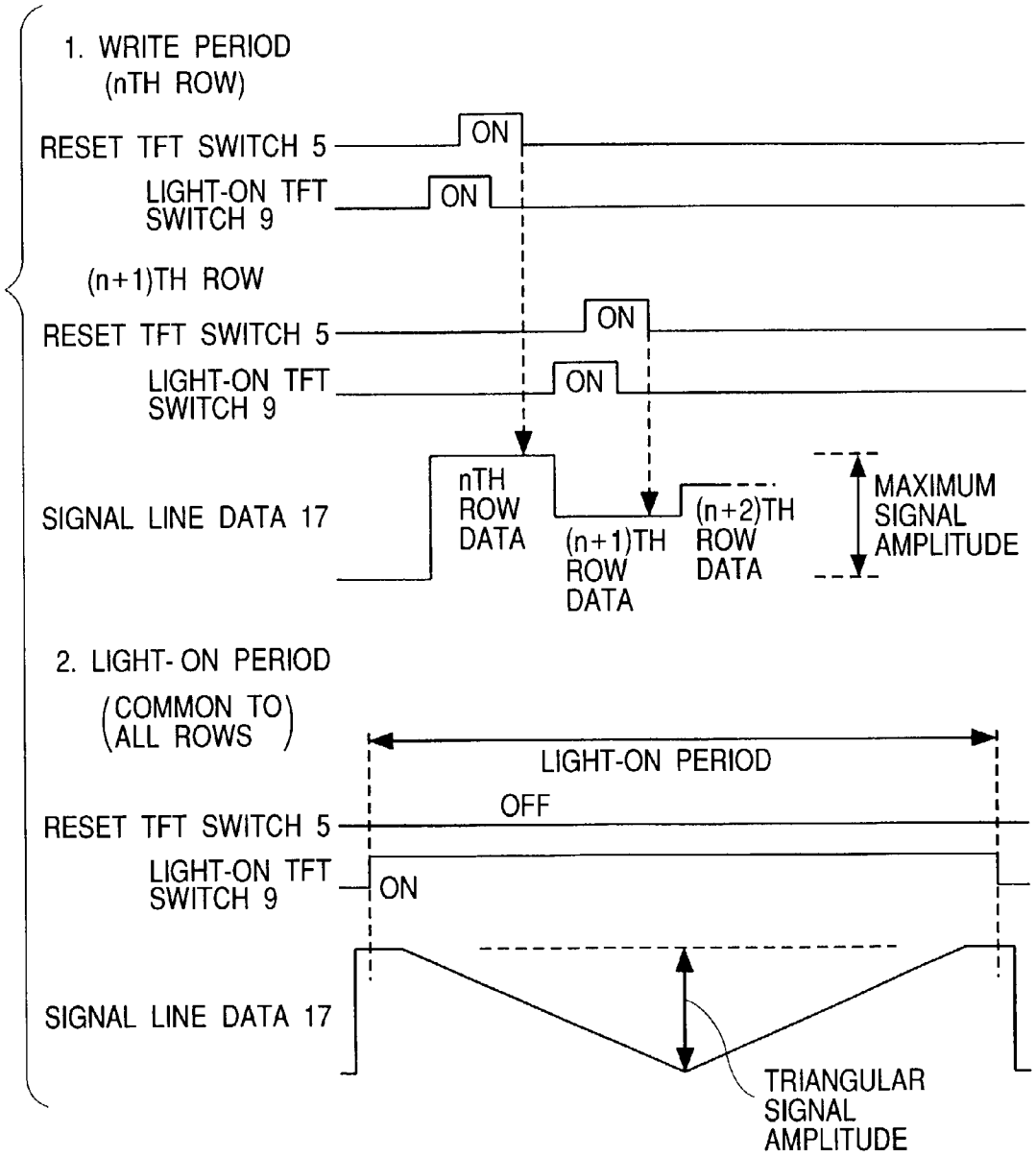
1. WRITE PERIOD
(nTH ROW)
RESET TFT SWITCH 5
ON
LIGHT-ON TFT SWITCH 9
ON
(n+1)TH ROW
RESET TFT SWITCH 5
ON
LIGHT-ON TFT SWITCH 9
ON
SIGNAL LINE DATA 17
nTH ROW DATA
(n+1)TH ROW DATA
(n+2)TH ROW DATA
MAXIMUM SIGNAL AMPLITUDE
2. LIGHT-ON PERIOD
(COMMON TO ALL ROWS)
LIGHT-ON PERIOD
RESET TFT SWITCH 5
OFF
LIGHT-ON TFT SWITCH 9
ON
SIGNAL LINE DATA 17
TRIANGULAR SIGNAL AMPLITUDE

FIG. 4

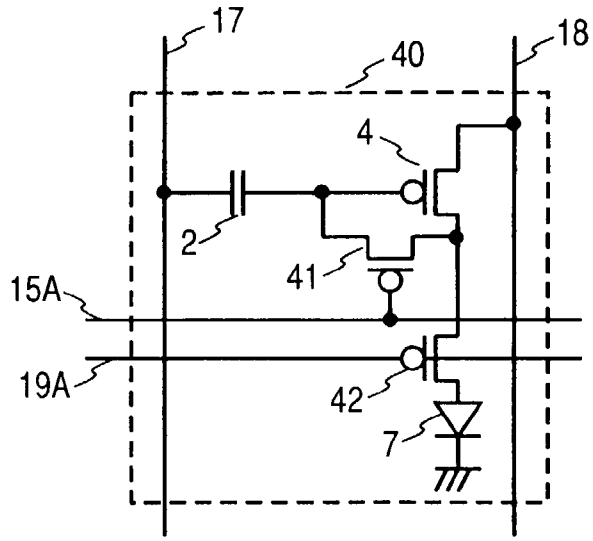

FIG. 5(a)

STRUCTURE OF RESET TFT SWITCH 41

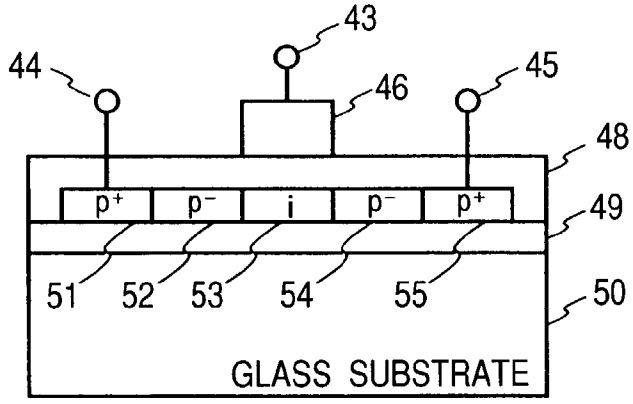

FIG. 5(b)

STRUCTURE OF OLED DRIVE TFT 4 AND LIGHT-ON TFT SWITCH 42

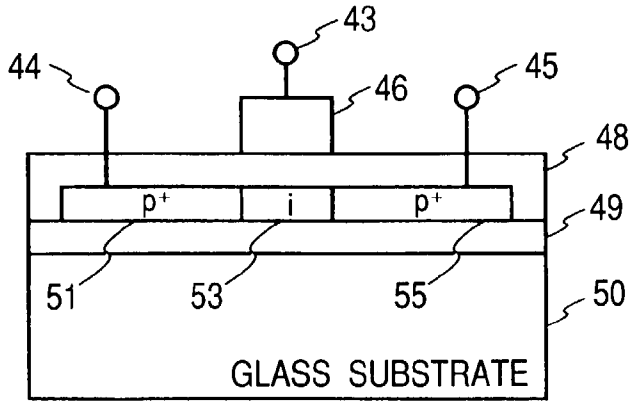

FIG. 6

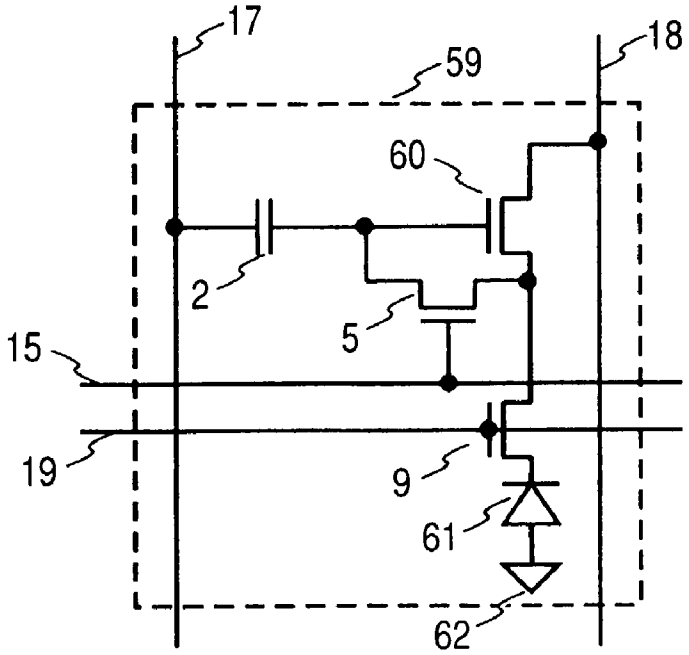

FIG. 7

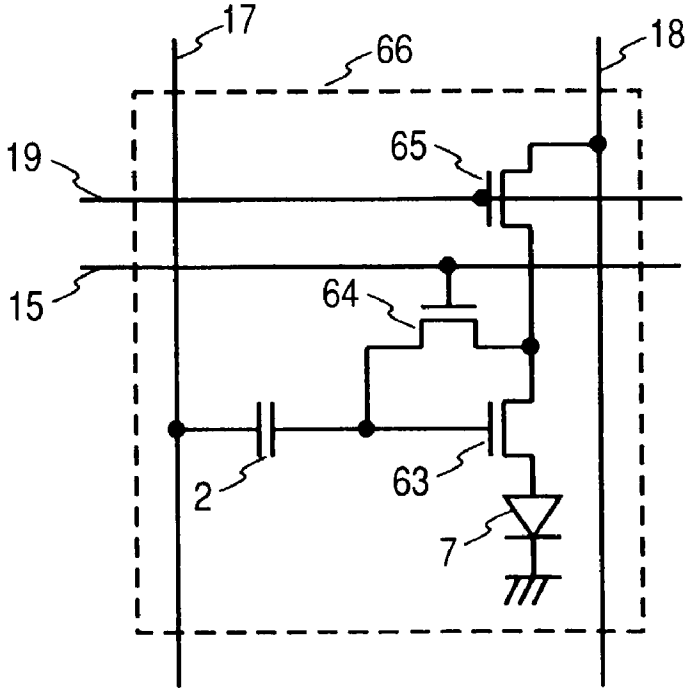

FIG. 8

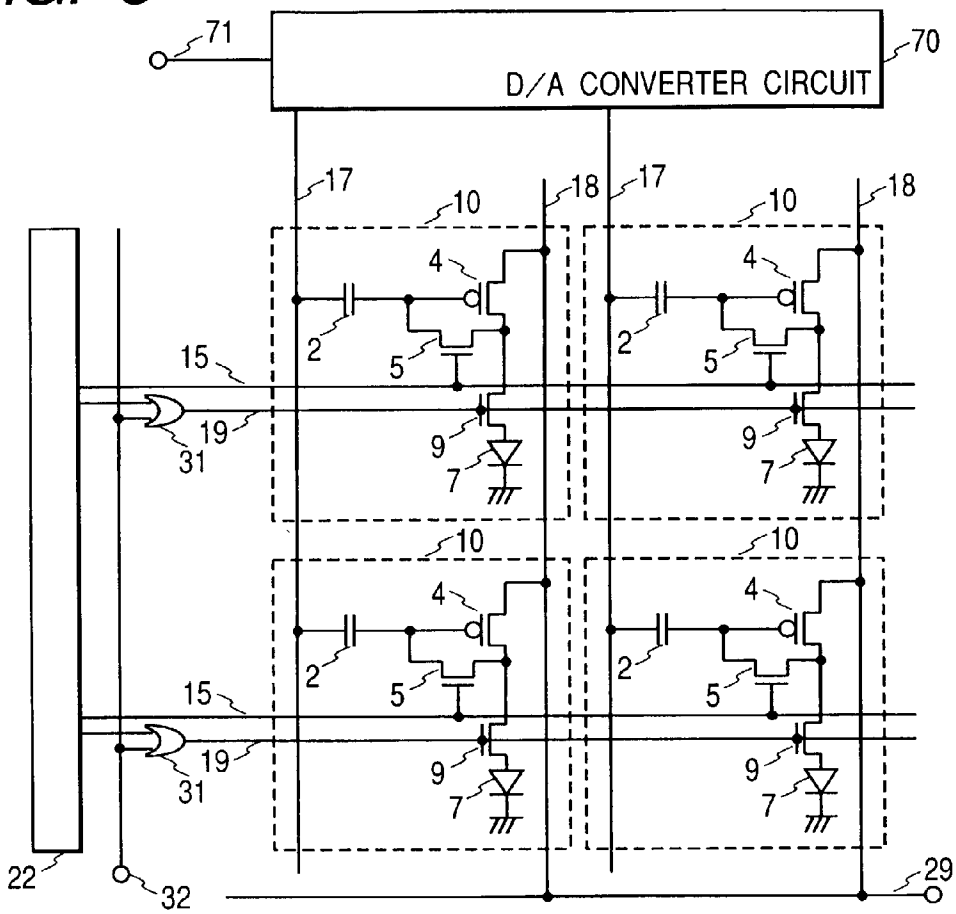
71
D/A CONVERTER CIRCUIT
70
17
18
10
4
2
5
15
19
31
9
7
22
32
29

FIG. 9

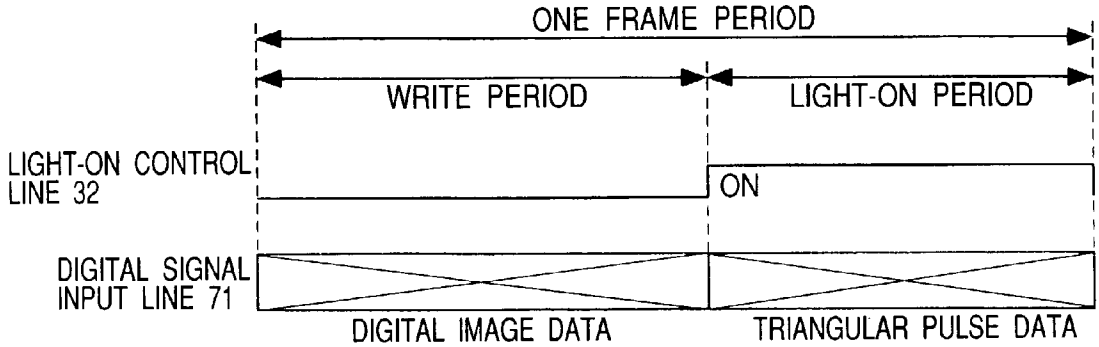
ONE FRAME PERIOD
WRITE PERIOD
LIGHT-ON PERIOD
LIGHT-ON CONTROL LINE 32
ON
DIGITAL SIGNAL INPUT LINE 71
DIGITAL IMAGE DATA
TRIANGULAR PULSE DATA

FIG. 10

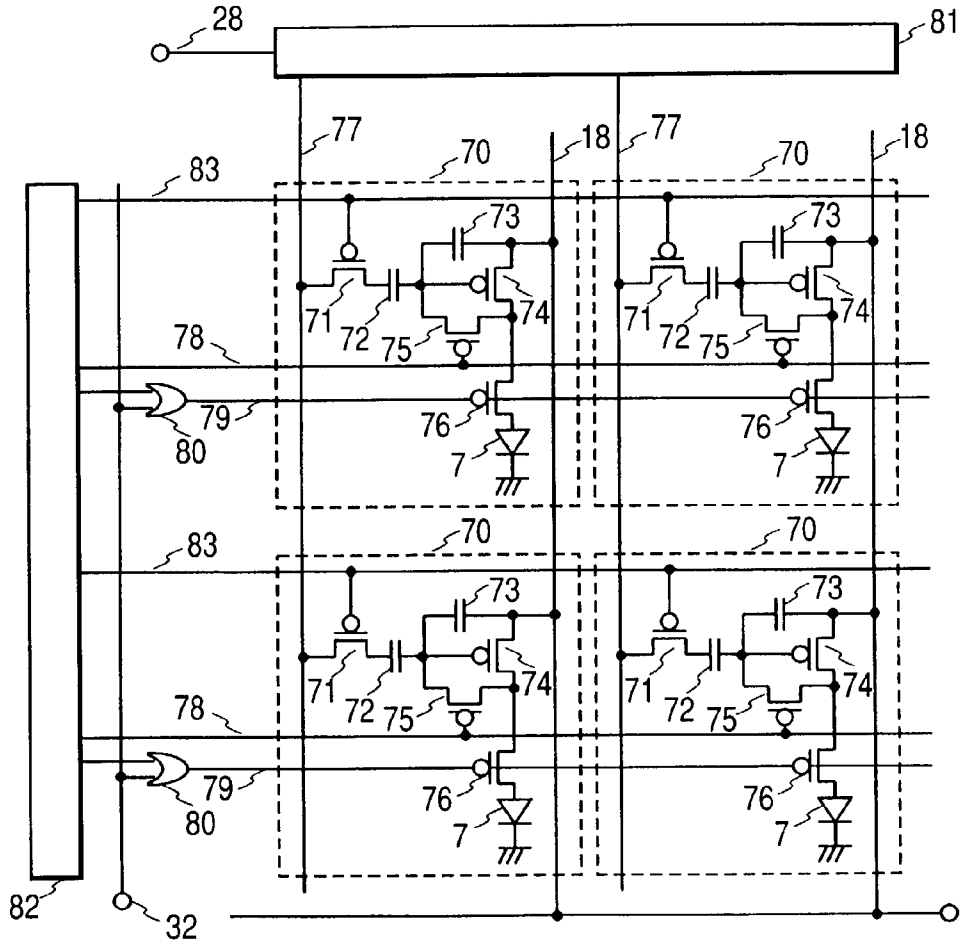
28
81
77
70
18
83
73
71
72
75
74
78
79
80
76
7
82
32

FIG. 11

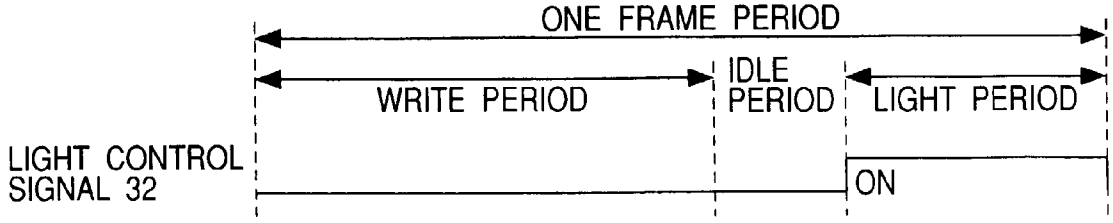
ONE FRAME PERIOD
WRITE PERIOD
IDLE PERIOD
LIGHT PERIOD
LIGHT CONTROL SIGNAL 32
ON

FIG. 12

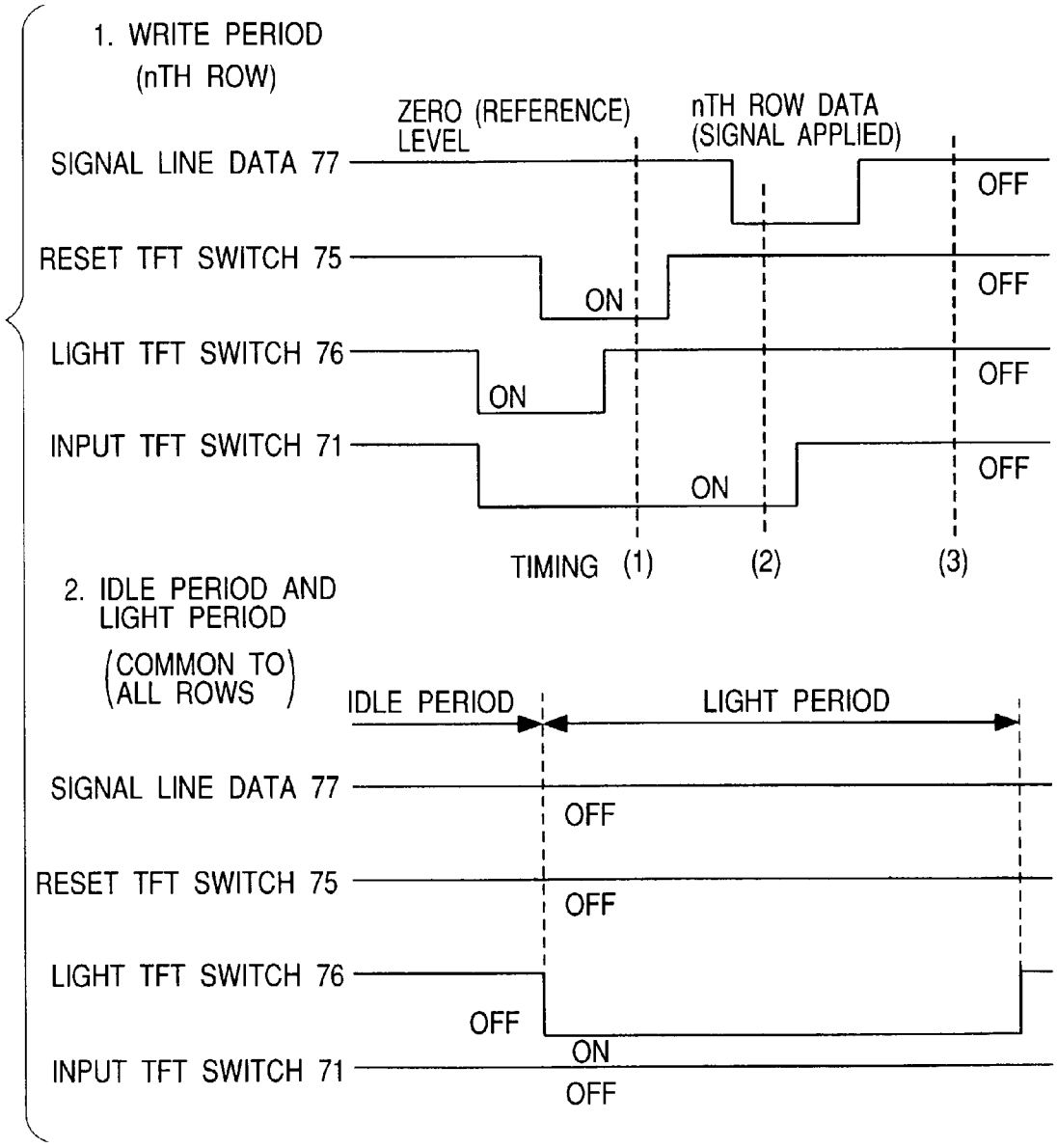
1. WRITE PERIOD
(nTH ROW)
ZERO (REFERENCE) LEVEL
nTH ROW DATA (SIGNAL APPLIED)
SIGNAL LINE DATA 77
OFF
RESET TFT SWITCH 75
ON
OFF
LIGHT TFT SWITCH 76
ON
OFF
INPUT TFT SWITCH 71
ON
OFF
TIMING (1) (2) (3)
2. IDLE PERIOD AND LIGHT PERIOD
(COMMON TO ALL ROWS)
IDLE PERIOD
LIGHT PERIOD
SIGNAL LINE DATA 77
OFF
RESET TFT SWITCH 75
OFF
LIGHT TFT SWITCH 76
OFF
ON
INPUT TFT SWITCH 71
OFF

FIG. 13

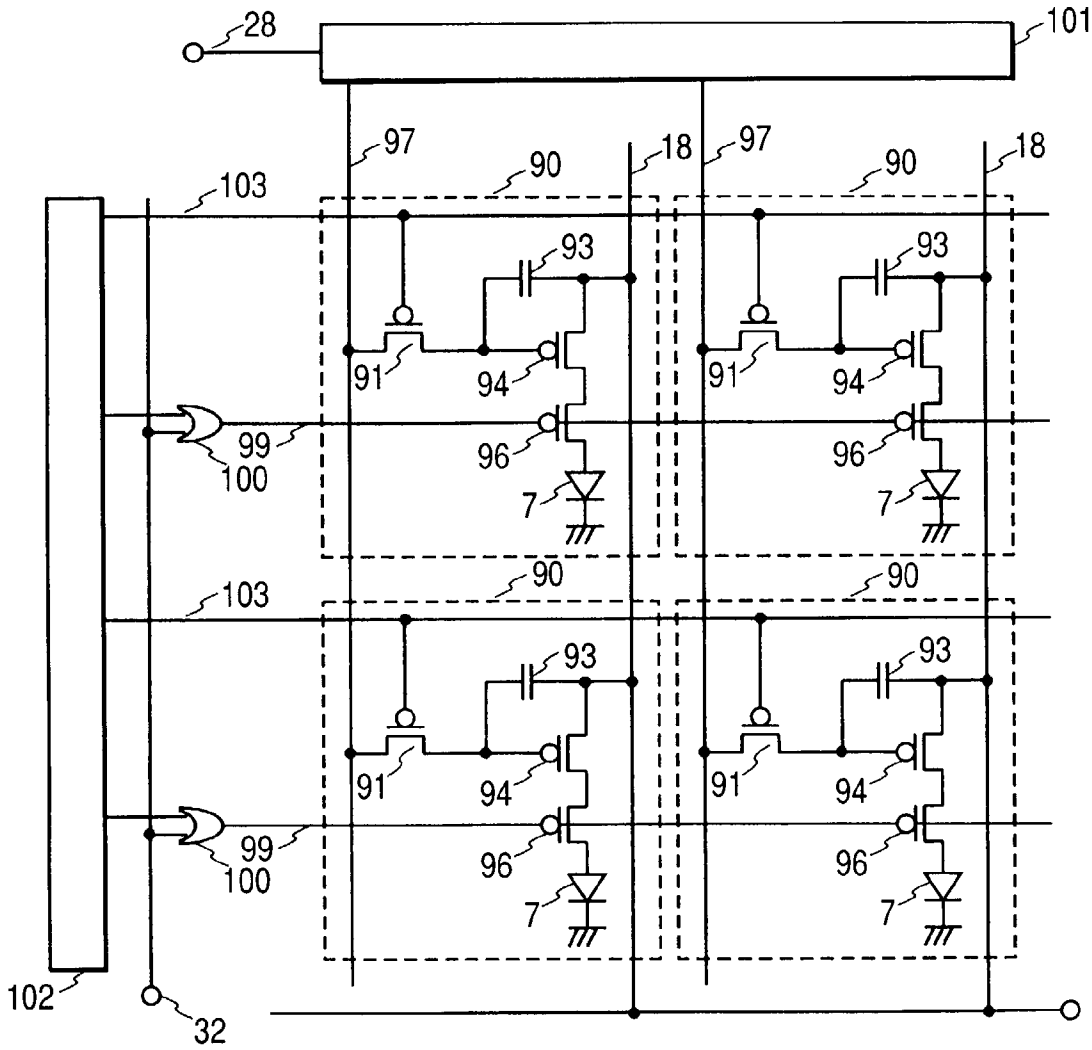
28
101
97
90
18
97
90
18
103
93
93
91
94
91
94
99
100
96
96
7
7
90
90
103
93
93
91
94
91
94
99
100
96
96
7
7
102
32

FIG. 14

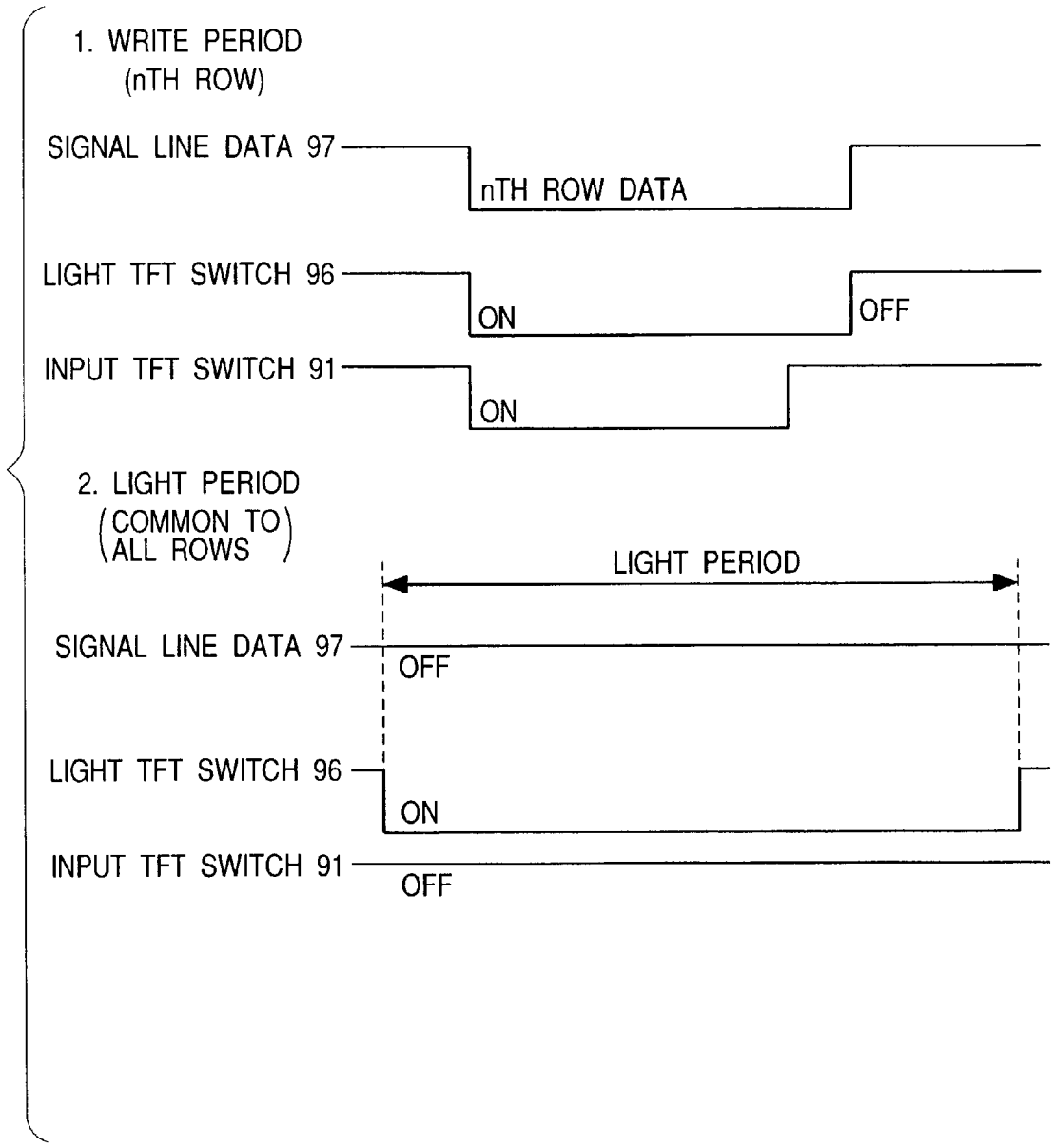
1. WRITE PERIOD
(nTH ROW)
SIGNAL LINE DATA 97
nTH ROW DATA
LIGHT TFT SWITCH 96
ON
OFF
INPUT TFT SWITCH 91
ON
2. LIGHT PERIOD
(COMMON TO ALL ROWS)
LIGHT PERIOD
SIGNAL LINE DATA 97
OFF
LIGHT TFT SWITCH 96
ON
INPUT TFT SWITCH 91
OFF

FIG. 15

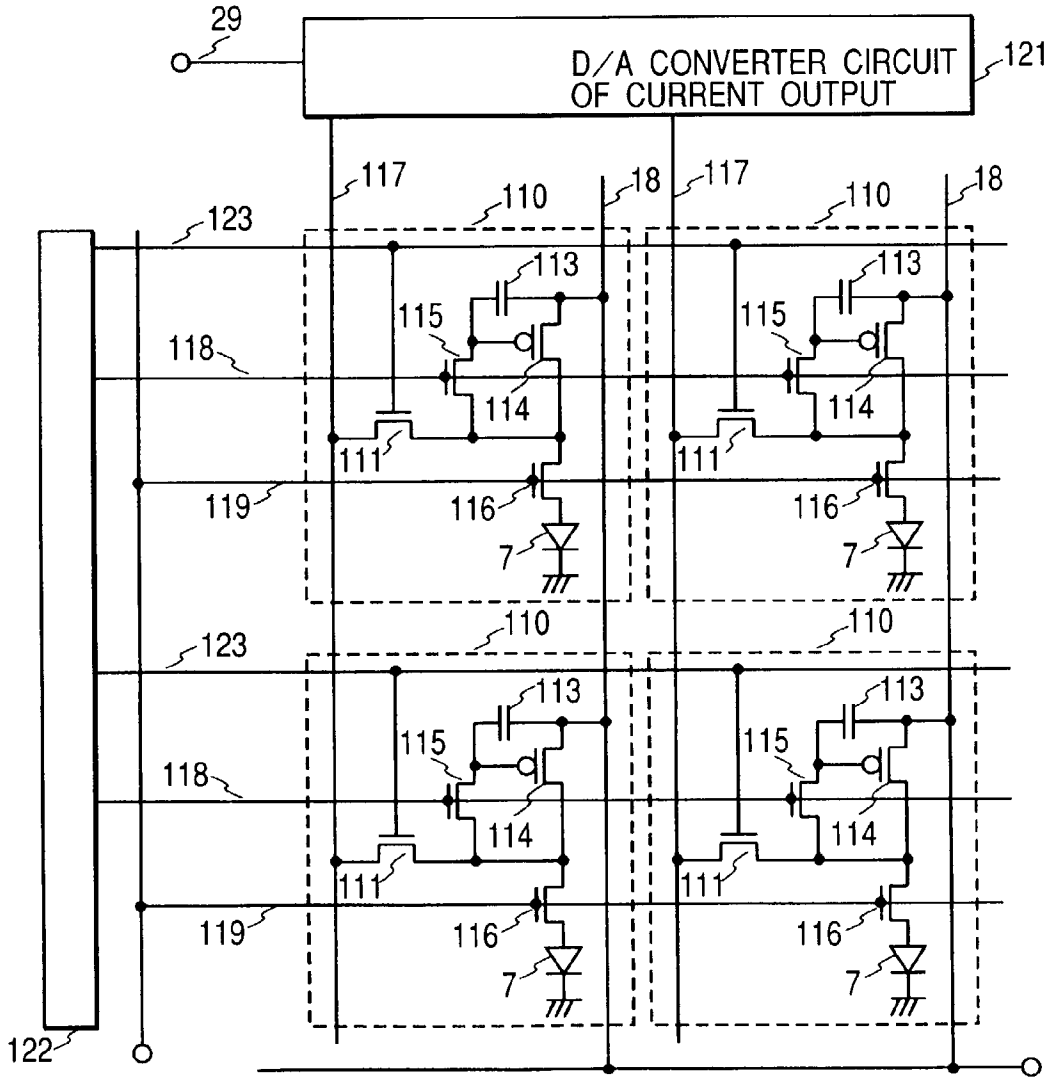
29
D/A CONVERTER CIRCUIT
OF CURRENT OUTPUT
121
117
110
18
123
113
115
118
114
111
119
116
7
122

FIG. 16

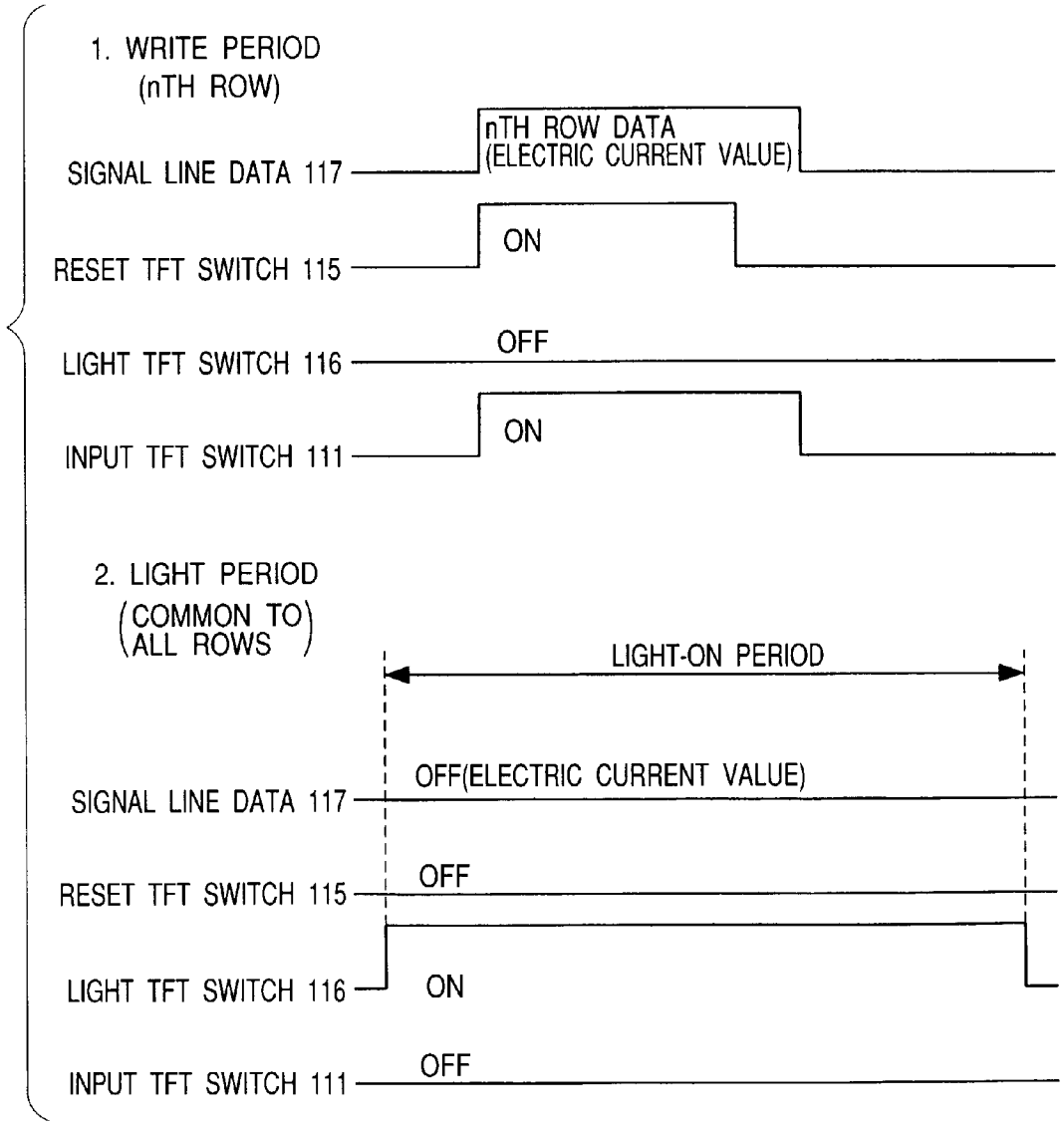
1. WRITE PERIOD
(nTH ROW)
SIGNAL LINE DATA 117
nTH ROW DATA
(ELECTRIC CURRENT VALUE)
RESET TFT SWITCH 115
ON
LIGHT TFT SWITCH 116
OFF
INPUT TFT SWITCH 111
ON
2. LIGHT PERIOD
(COMMON TO ALL ROWS)
LIGHT-ON PERIOD
SIGNAL LINE DATA 117
OFF(ELECTRIC CURRENT VALUE)
RESET TFT SWITCH 115
OFF
LIGHT TFT SWITCH 116
ON
INPUT TFT SWITCH 111
OFF

FIG. 17

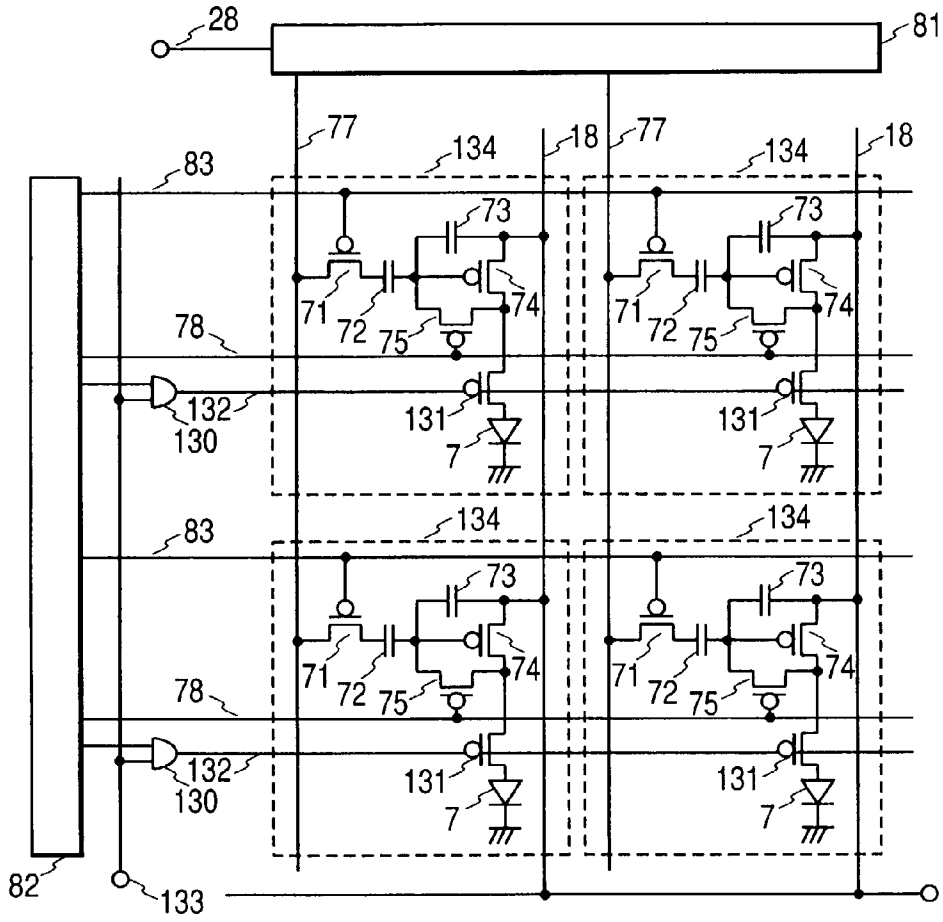
28
81
77
134
18
77
134
18
83
73
73
71
72
75
74
71
72
75
74
78
132
130
131
131
7
7
83
134
134
73
73
71
72
75
74
71
72
75
74
78
132
130
131
131
7
7
82
133

FIG. 18

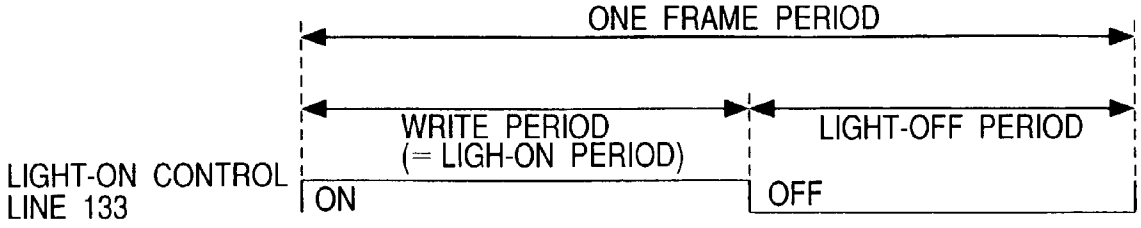
ONE FRAME PERIOD
WRITE PERIOD
(= LIGH-ON PERIOD)
LIGHT-OFF PERIOD
LIGHT-ON CONTROL
LINE 133
ON
OFF

FIG. 19

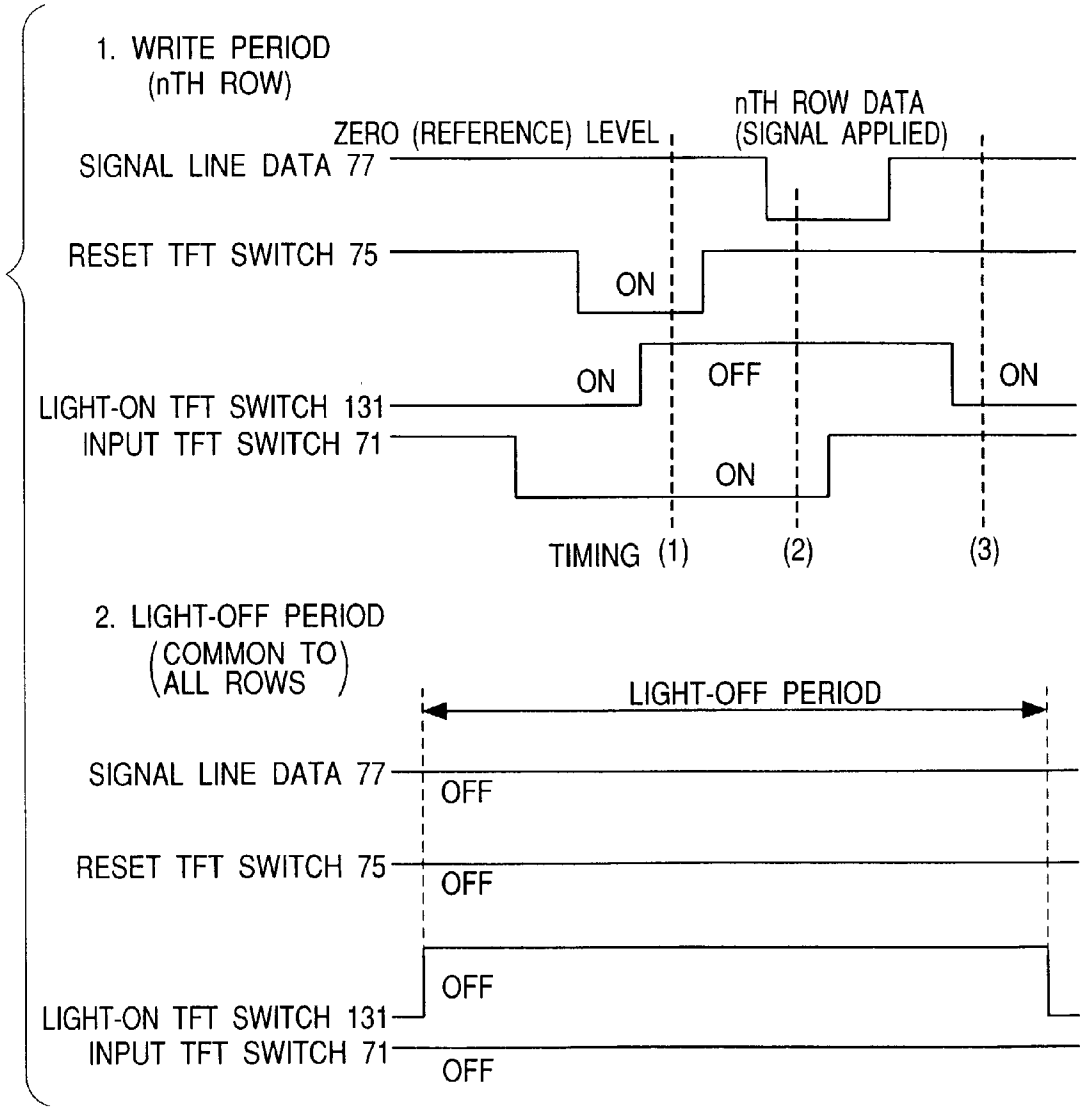
1. WRITE PERIOD
(nTH ROW)
ZERO (REFERENCE) LEVEL
nTH ROW DATA
(SIGNAL APPLIED)
SIGNAL LINE DATA 77
RESET TFT SWITCH 75
ON
LIGHT-ON TFT SWITCH 131
ON
OFF
ON
INPUT TFT SWITCH 71
ON
TIMING (1)
(2)
(3)
2. LIGHT-OFF PERIOD
(COMMON TO ALL ROWS)
LIGHT-OFF PERIOD
SIGNAL LINE DATA 77
OFF
RESET TFT SWITCH 75
OFF
OFF
LIGHT-ON TFT SWITCH 131
INPUT TFT SWITCH 71
OFF

FIG. 20

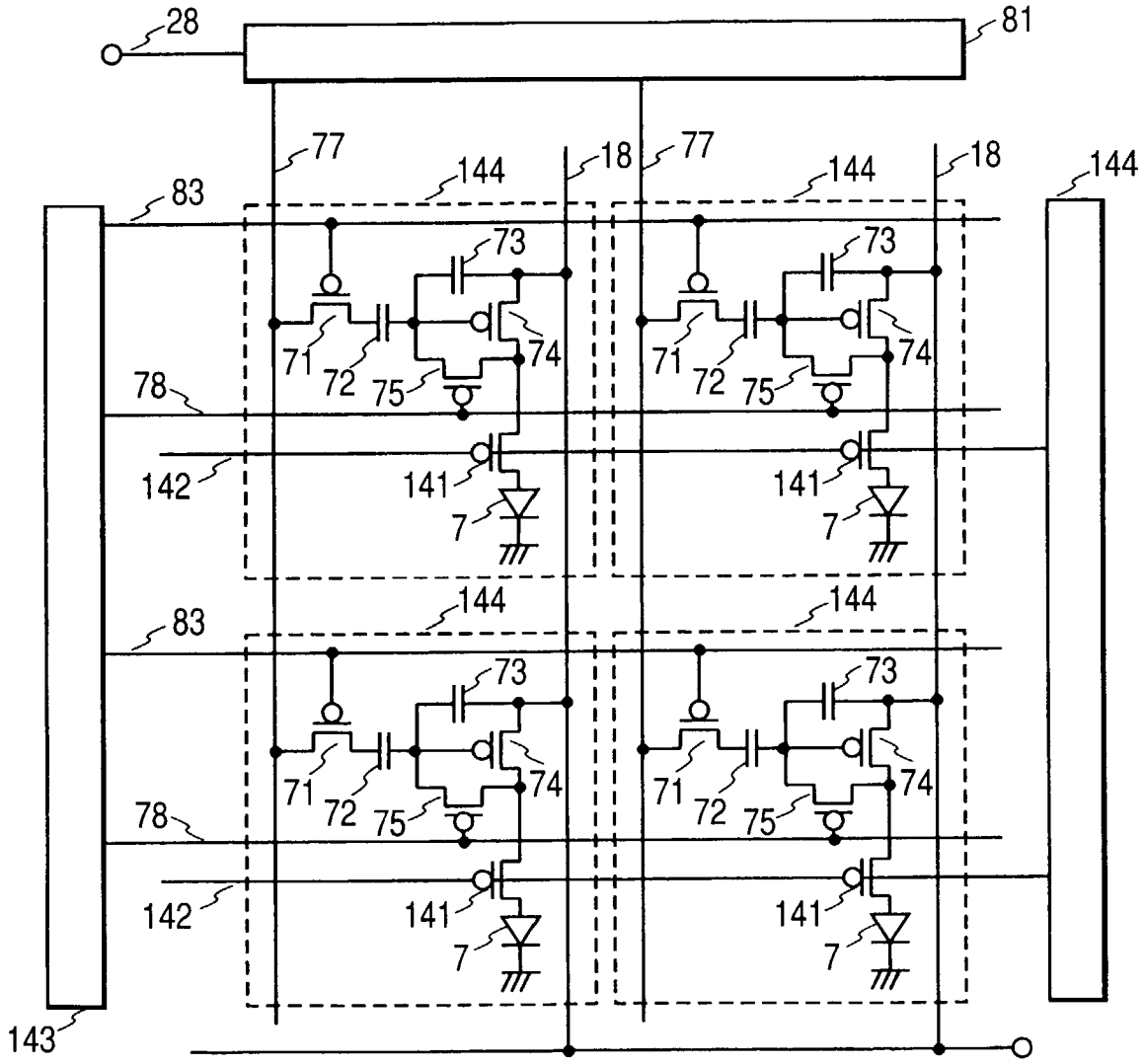
28
81
77
144
18
77
144
18
144
83
73
73
71
72
75
74
71
72
75
74
78
142
141
141
7
7
144
144
83
73
73
71
72
75
74
71
72
75
74
78
142
141
141
7
7
143

FIG. 21

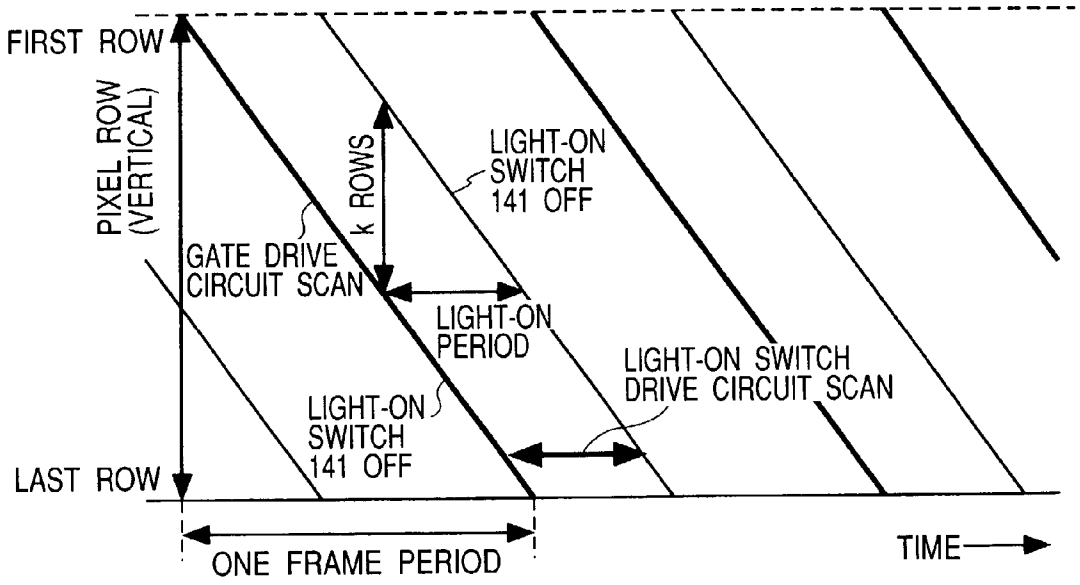
FIRST ROW
PIXEL ROW (VERTICAL)
k ROWS
LIGHT-ON SWITCH 141 OFF
GATE DRIVE CIRCUIT SCAN
LIGHT-ON PERIOD
LIGHT-ON SWITCH DRIVE CIRCUIT SCAN
LIGHT-ON SWITCH 141 OFF
LAST ROW
ONE FRAME PERIOD
TIME

FIG. 22

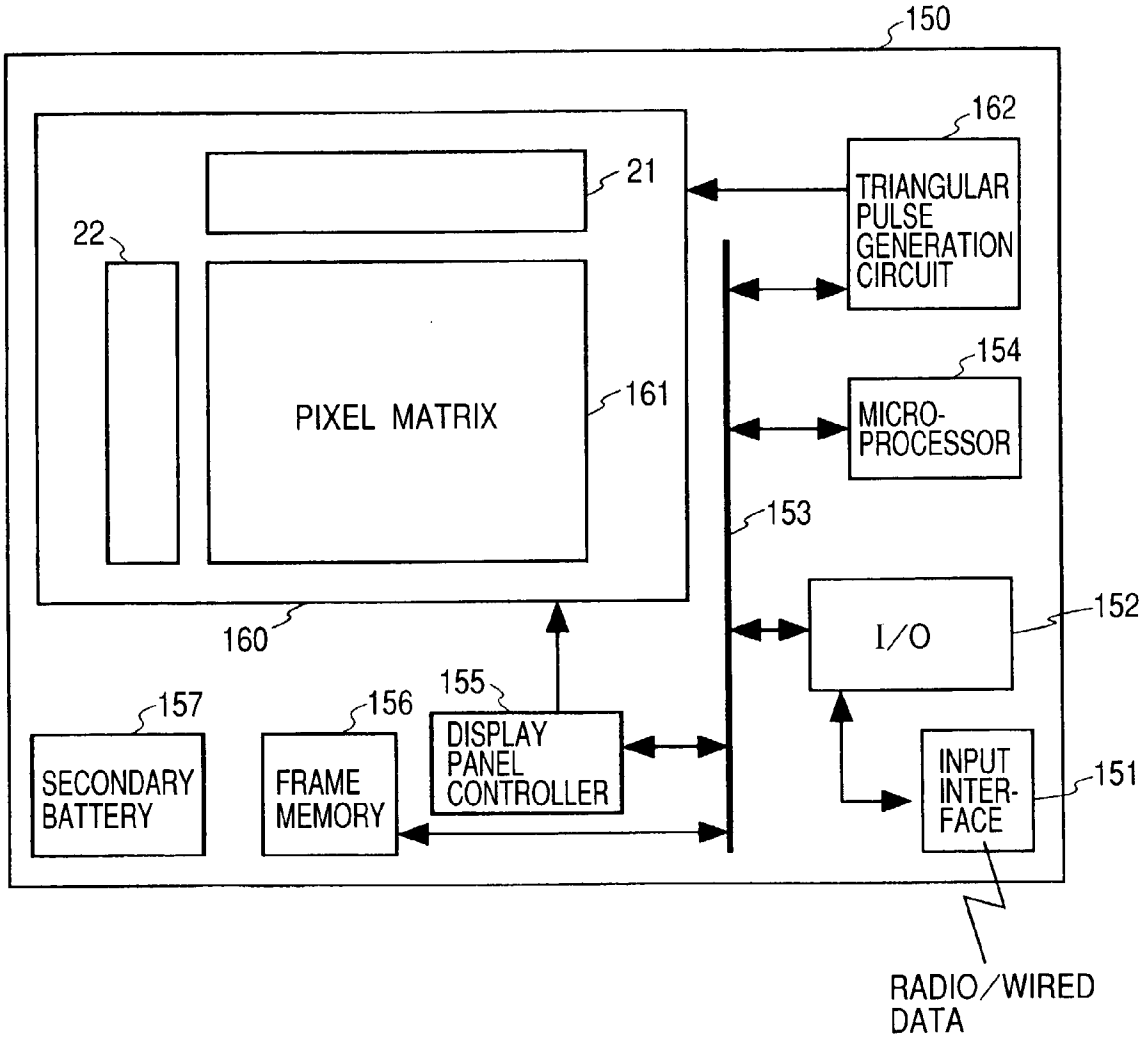
150
162
TRIANGULAR PULSE GENERATION CIRCUIT
21
22
PIXEL MATRIX
161
154
MICRO-PROCESSOR
153
160
I/O
152
155
157
156
DISPLAY PANEL CONTROLLER
SECONDARY BATTERY
FRAME MEMORY
INPUT INTER-FACE
151
RADIO/WIRED DATA

FIG. 23
PRIOR ART

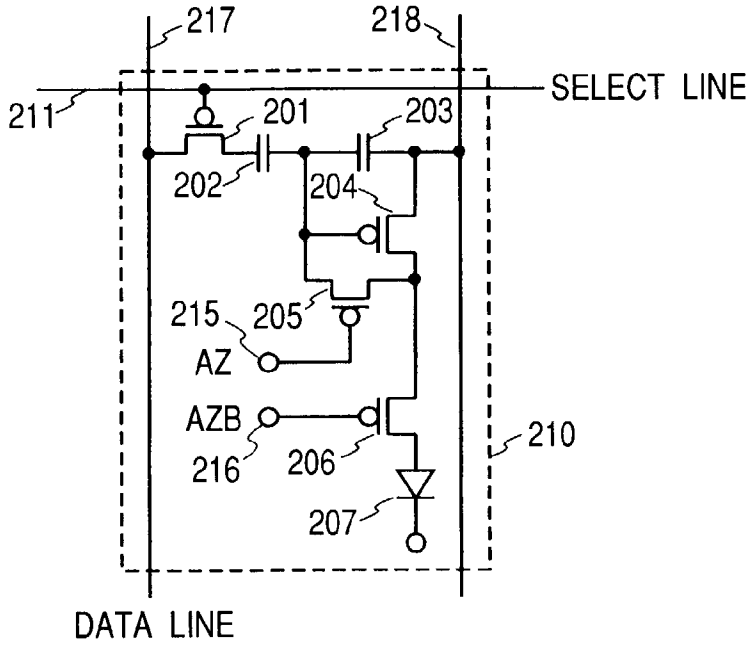

FIG. 24
PRIOR ART

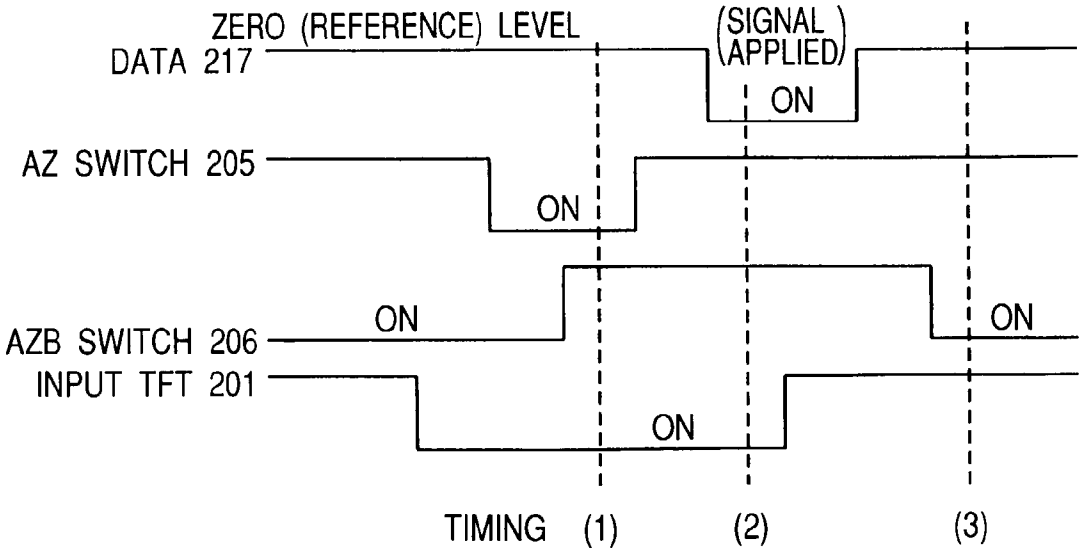

IMAGE DISPLAY DEVICE

FIELD OF THE INVENTION

[0001] The present invention relates to an image display device that provides a high quality image display. The invention specifically relates to an image display device that possesses an especially satisfactory display quality of animated images of the like and sufficiently suppresses the irregularities of display quality between pixels.

BACKGROUND OF THE INVENTION

[0002] A conventional technique will be described with reference to **FIG. 23** and **FIG. 24**.

[0003] **FIG. 23** illustrates a pixel configuration of a polysilicon TFT light emitting display device that uses the conventional technique. Pixels each having an organic light emitting diode (OLED) **207** as a pixel luminous object are arrayed on a display unit in a matrix form. However, **FIG. 23** illustrates only one pixel in order for simplification. The pixel **210** is connected to an external drive circuit through a selection line **211**, a data line **217**, a power supply line **218**, and so forth. In the pixel **210**, the data line **217** is connected to one end of a canceling capacitor **202** through an input TFT **201**. The other end of the canceling capacitor **202** is connected to the gate of a drive TFT **204**, one end of a storage capacitor **203**, and one end of an AZ switch **205**. The other end of the storage capacitor **203** and one end of the drive TFT **204** are commonly connected to the power supply line **218**. The other ends of the drive TFT **204** and the AZ switch **205** are commonly connected to one end of an AZB switch **206**. The other end of the AZB switch **206** is connected to a common power supply through the OLED **207**. Here, the AZ switch **205** and the AZB switch **206** are formed on the TFT, and the gates of these switches are connected to an AZ line **215** and an AZB line **216**.

[0004] Next, the operation of this conventional example is explained with reference to **FIG. 24**. **FIG. 24** illustrates the drive waveforms of the data line **217**, the AZ switch **205**, the AZB switch **206**, and the input TFT **201**, when a display signal is inputted to the pixel. Since the pixel is composed of the p-channel TFTs, the upper (high voltage) side of the drive waveforms in **FIG. 24** corresponds to the TFT being OFF, and the lower (low voltage) side corresponds to the TFT being ON.

[0005] First, at the timing **(1)** shown in **FIG. 24**, the input TFT **201** is turned ON, the AZ switch **205** is turned ON, and the AZB switch **206** is turned OFF. Thereby, the zero (reference) level signal voltage that has been inputted to the data line **217** is inputted to one end of the canceling capacitor **202**. At the same time, the voltage across the gate and source of the drive TFT **204** being put into a diode connection by the AZ switch **205** (turned ON) is reset to the voltage of the power supply line **218**+Vth. Here, the Vth represents the threshold voltage of the drive TFT **204**. When the zero level signal voltage is inputted, this operation automatically brings the pixel into the zero bias such that the gate voltage of the drive TFT **204** becomes just the threshold voltage.

[0006] Next, at the timing **(2)** shown in **FIG. 24**, the AZ switch **205** is turned OFF, and a signal voltage of a specific analog level is inputted to the data line **217**. Thereby, the specific level signal voltage is inputted to one end of the canceling capacitor **202**. By this operation, the gate voltage of the drive TFT **204** varies by an additional amount over the specific level of signal, in comparison to the condition at the timing of the automatic zero bias.

[0007] Next, at the timing **(3)** shown in **FIG. 24**, the input TFT **201** is turned OFF, the AZB switch **206** is turned ON. Thereby, the specific level of signal that has been applied by the input TFT **201** being ON is stored into the canceling capacitor **202**. By this operation, the gate of the drive TFT **204** is fixed to a state that the voltage thereof varies by an amount that the specific level of signal is added to the threshold voltage. Further, the signal current (driven by the drive TFT **206**) drives the OLED **207** to emit at a brightness corresponding to the specific voltage level of the inputted signal. The conventional technique of this sort is disclosed in detail, for example, in the Digest of Technical Papers, SID 98, pp.11 through 14, etc.

[0008] The conventional technique can not provide an especially satisfactory display quality of animated images or sufficiently suppresses the irregularities of display quality between pixels. The conventional example described with **FIG. 23** and **FIG. 24** introduces the canceling capacitor **202** and the AZ switch **205**, and the AZB switch **206** to absorb the Vth irregularities of the drive TFT **204** into the voltage across the canceling capacitor **202**. Thus, the conventional example realizes an analog display with reduced irregularities of brightness in the OLED **207**. The conventional example does not concern a satisfactory display quality of animated images. That is, the emission of the OLED **207** starts from the moment of the AZB switch **206** being turned ON, which is illustrated before the timing **(3)** in **FIG. 24**, and is continued for virtually one frame, till the moment of the input TFT **201** being turned ON before the timing **(1)** in the next frame. However, in such a display method, the human eyes are apt to detect the images for continuing two frames so as to visually superimpose them, owing to the afterimage effect of the visual property, which will present unnatural animated images referred as frame retaining.

[0009] Although the conventional technique is able to cancel the Vth irregularities of the drive TFT **204** as mentioned above, the characteristic irregularities of the drive TFT **204** are not limited to the Vth irregularities. The conventional technique attains the drive current of the OLED **207** by the current output of the drive TFT **204**. This means that the conventional technique also produces brightness unevenness like gain irregularities in each of the pixels, even if the Vth irregularities of the drive TFT **204** can be cancelled (if there are the irregularities of current drive capability due to the irregularities of mobility in the drive TFT **204**). Generally, there are large irregularities between individual devices of the TFTs, and it is very difficult to suppress the irregularities between the individual devices, especially when multiple TFTs are packed in a pixel. In case of the low temperature polycrystalline silicon TFT process, for example, the irregularities of mobility are known to appear in about ten percents. Therefore, the conventional technique can not sufficiently suppress the generation of brightness unevenness due to irregularities of display quality between the pixels.

SUMMARY OF THE INVENTION

[0010] The foregoing problem that animated images present unnaturally, such as the frame retaining, can be

solved by an image display device includes: a display unit composed of plural pixels each having a light emitting means, a signal line for inputting an analog display signal to the pixels, a light emitting drive means for driving,the light emitting means based on the analog display signal, and a light emitting control switch means for controlling a light-on or a light-off of the light emitting means disposed between the light emitting drive means and the light emitting means in each of the pixels.

[0011] The light emitting control switch means makes it can set a non-emission period of light between two consecutive frames by controlling a light-on time of the light emitting means in one frame. By setting an appropriate non-emission period of light, the afterimage effect that had appeared on the human visual property will lessen sufficiently within this non-emission period of light. Accordingly, the images for continuing two frames will not be superposed visually as mentioned above, which permits a smooth animated image display.

[0012] The problem that it is difficult to sufficiently suppress the generation of brightness unevenness due to the irregularities of display quality between the pixels can be solved by an image display device including a display unit composed of plural pixels each having a light emitting means, a signal line for inputting an analog display signal to the pixels, and a light emitting drive means for driving the light emitting means based on the analog display signal. The light emitting drive means provided to each of the pixels is a field effect transistor. The signal line is connected to the gate of the field effect transistor through at least one capacitance means. One of the source or the drain of the field effect transistor is connected to a power supply means through a switch, and the other of the source and the drain is directly connected to one of the light emitting means and the power supply means. The field effect transistor is contracted to apply one of the analog display signal and a virtually triangular pulse signal to the gate thereof through the capacitance means.

[0013] This construction controls a light-on period of the light emitting means at a point of time by the value of the analog signal voltage written in the capacitance means of each pixel so as to achieve a gradation display for animated images or the like. Therefore, it is possible to sufficiently suppress the irregularities of display quality between the pixels, which was the problem for the conventional technique that attains a gradation display by analogously controlling the emission intensity of the light emitting means.

BRIEF DESCRIPTION OF THE DRAWINGS

[0014] The foregoing and additional features and characteristics of the present invention will become more apparent from the following detailed description considered with reference to the accompanying drawings in which like reference numerals designate like elements and wherein:

[0015] **FIG. 1** is a structure configuration of an OLED display panel in the first embodiment of the present invention;

[0016] **FIG. 2** shows the waveforms of the light-on control line and a signal select line of the first embodiment;

[0017] **FIG. 3** shows a waveform timing chart of the drives to the switches and the inputs of the signal line data of the first embodiment;

[0018] **FIG. 4** shows a pixel configuration in the second embodiment of the present invention;

[0019] FIGS. **5**(*a*) and **5**(*b*) illustrate the cross-sectional structures of the switches of the second embodiment;

[0020] **FIG. 6** shows a pixel configuration in the third embodiment of the present invention;

[0021] **FIG. 7** shows a pixel configuration in the fourth embodiment of the present invention;

[0022] **FIG. 8** is a structure configuration of an OLED display panel in the fifth embodiment of the present invention;

[0023] **FIG. 9** shows the waveforms of the light-on control line and a digital signal input line in the fifth embodiment;

[0024] **FIG. 10** is a structure configuration of an OLED display panel in the sixth embodiment of the present invention;

[0025] **FIG. 11** shows a waveform of the light-on control line in the sixth embodiment;

[0026] **FIG. 12** shows a waveform timing chart of the drives to the switches and the inputs of the signal line data in the sixth embodiment;

[0027] **FIG. 13** is a structure configuration of an OLED display panel in the seventh embodiment of the present invention;

[0028] **FIG. 14** shows a waveform timing chart of the drives to the switches and the inputs of the signal line data in the seventh embodiment;

[0029] **FIG. 15** is a structure configuration chart of an OLED display panel in the eighth embodiment of the present invention;

[0030] **FIG. 16** shows a waveform timing chart of the drives to the switches and the inputs of the signal line data in the eighth embodiment;

[0031] **FIG. 17** is a structure configuration of an OLED display panel in the ninth embodiment of the present invention;

[0032] **FIG. 18** shows a waveform of the light-on control line in the ninth embodiment;

[0033] **FIG. 19** shows a waveform timing chart of the drives to the switches and the inputs of the signal line data in the ninth embodiment;

[0034] **FIG. 20** is a structure configuration of an OLED display panel in the tenth embodiment of the present invention;

[0035] **FIG. 21** is a typical scanning pattern of the gate drive circuit and the light-on switch drive circuit in the tenth embodiment;

[0036] **FIG. 22** is a structure configuration of an animation display system in the eleventh embodiment of the present invention;

[0037] **FIG. 23** shows a pixel configuration of a light emitting display device using a conventional technique; and

[0038] **FIG. 24** shows a waveform timing chart of the light emitting display device using the conventional technique.

DETAILED DESCRIPTION OF THE PREFERRED EMBODIMENTS

[0039] First Embodiment

[0040] The first embodiment of the invention is described with reference to **FIG. 1** through **FIG. 3**.

[0041] First, the total construction of this embodiment is discussed with reference to **FIG. 1**.

[0042] **FIG. 1** illustrates a configuration of an OLED (Organic Light Emitting Diode) display panel of the first embodiment. Pixels **10**, each having an OLED **7** as a pixel luminous object, are arrayed in a matrix form on a display unit. Each pixel is connected to the drive circuits furnished surrounding the display unit through a reset line **15**, signal line **17**, and a light-on switch line **19**, etc. The reset line **15** is connected to the scanning output of a gate drive circuit **22**, the signal line **17** is connected to a signal drive circuit **21** through a signal input switch **23**, and to a triangular pulse input line **27** through a triangular pulse input switch **26**. To the signal drive circuit **21** is connected a signal input line **28** that inputs an analog signal voltage. Since the signal drive circuit **21** is an analog signal voltage distribution circuit configured with generally known shift registers and analog switches, its details are omitted here.

[0043] The signal input switch **23** is alternated by a signal select line **24**, and the triangular pulse input switch **26** is alternated by an inverted signal select line **25** (being the inverted output of the signal line **24** by an inverter circuit **30**) such that the two switches are turned on alternately. The light-on switch line **19** is outputted from a light-on switch OR gate **31**. To the light-on switch OR gate **31** are inputted the scanning output of the gate drive circuit **22** and a light-on control line **32**. Since the gate drive circuit **22** is made up with generally known shift registers, its details thereof are omitted. Here, all the circuits of the pixel **10**, the gate drive circuit **22**, and the signal drive circuit **21**, etc., illustrated in **FIG. 1** are formed on a glass substrate by using the generally known low temperature polycrystalline silicon TFTs. In each pixel, the signal line **17** is connected through a pixel capacitor **2** to the gate of an OLED drive TFT **4** being a p-channel MOS transistor. The source of the OLED drive TFT **4** is connected to a power supply line **18**. The drain of the OLED drive TFT **4** is connected by way of a light-on TFT switch **9** controlled by the light-on switch line **19** to one end of the OLED **7**. The other end of the OLED **7** is connected to the common ground. Further, a reset TFT switch **5** that is controlled by the reset line **15** is furnished across the gate and the drain of the OLED drive TFT **4**.

[0044] Next, the operation of this embodiment is discussed with reference to **FIG. 2** and **FIG. 3**.

[0045] **FIG. 2** illustrates the operation waveform of the light-on control line **32** and the signal select line **24** in one frame period in this embodiment. The one frame period is predetermined as 1/60 second in this embodiment, which is divided into "write period" (i.e., light-off period or non-emission period of light) in the first half and "light-on period" in the latter half. The rate of this division is specified, for example, 10%-90% to the "write period and 90%-10% to the "light-on period", or preferably as 50% each to the "write period" and the "light-on period." The light-on control line **32** is turned OFF during the "write period," but it is turned ON during the "light-on period." Thereby, the light-on control line **32** fixes the light-on TFT switches **9** of all the pixels into the ON state simultaneously through the light-on switch lines **19**. Further, the signal select line **24** is turned ON during the "write period," and is turned OFF during the "light-on period." Thereby, the signal select line **24** turns the signal input switches **23** into ON during the "write period" and OFF during the "light-on period," and turns the triangular pulse input switches **26** into OFF during the "write period" and ON during the "light-on period". Thus, into the signal lines **17** is written the analog signal voltage during the "write period" through the signal drive circuit **21**, and is written the triangular pulse voltage during the "light-on period" through the triangular pulse input line **27**.

[0046] **FIG. 3** illustrates the waveform timing of drive of the reset TFT switch **5**, of the light-on TFT switch **9**, and of the data input on the signal line **17** in each pixel during the "write period" and the "light-on period."

[0047] During the "write period" being the first half of one frame, the gate drive circuit **22** sequentially scans the pixels by each row. Synchronously, the signal drive circuit **21** writes the analog signal voltage into the signal lines **17** as signal data. In particular, in the pixel on the n-th row selected by the gate drive circuit **22**, the light-on TFT switch **9** is turned ON first, and then the reset TFT switch **5** is turned ON. As both the switches are turned ON, the OLED drive TFT **4** is put into a diode connection with the same potential applied across the gate and the drain therein. Accordingly, applying a specific voltage to the power supply line **18** in advance will put the OLED drive TFT **4** and the OLED **7** into the conductive state. Next, as the light-on TFT switch **9** is turned OFF, the OLED drive TFT **4** and the OLED **7** are forcibly put into the OFF state. At this moment, since the gate and the drain of the OLED drive TFT **4** are short-circuited through the reset TFT switch **5**, the gate voltage of the OLED drive TFT **4** whose gate is connected to one end of the pixel capacitor **2** is automatically reset to a voltage lower by the threshold voltage Vth than the voltage of the power supply line **18**. At this moment, the analog signal voltage is inputted as the signal line **17** data to the other end of the pixel capacitor **2**. Next, as the reset TFT switch **5** is turned OFF, the potential difference between both ends of the pixel capacitor **2** is stored to remain intact in the pixel capacitor **2**. In other words, when a voltage equal to the analog signal voltage is inputted to one end of the pixel capacitor **2** on the side of the signal line **17**, the gate voltage of the OLED drive TFT **4** is forcibly set to a voltage lower by the threshold voltage Vth than a voltage of the power supply line **18**. At this time, if a voltage level inputted to one end of the pixel capacitor **2** on the side of the signal line **17** is higher than the analog signal voltage, the OLED drive TFT **4** is OFF, and if the voltage level is lower than the analog signal voltage, the OLED drive TFT **4** is ON. However, during the period of scanning the pixels of the other rows, the light-on TFT switch **9** of the concerned pixel is always OFF. Accordingly, the OLED **7** will not light up regardless of the high or low of the data voltage on the signal line **17**. In this manner, the writing of the analog signal voltage into the pixels is carried out sequentially by each row, and the "write period" in the first half of one frame ends at the time when the writing into all the pixels is completed.

[0048] Next, during the "light-on period" being the latter half of one frame, the gate drive circuit **22** is suspended, and the light-on control line **32** turns ON simultaneously the light-on TFT switches **9** of all the pixels by way of the light-on switch OR gates **31** and the light-on switch lines **19**. At this moment, the triangular pulse input line **27** inputs the triangular pulse as illustrated in **FIG. 3** as the signal line data into the signal lines **17** through the triangular pulse input switches **26**. As mentioned above, each pixel capacitor **2** is reset such that the OLED drive TFT **4** is turned ON or OFF according to whether the voltage of the signal line **17** is higher or lower than the analog signal voltage written in advance. Since the light-on TFT switch **9** is always ON in the "light-on period," the OLED **7** of each pixel is driven by the OLED drive TFT **4** according to the relation between the analog signal voltage written in advance and the triangular pulse voltage applied to the signal line **17**. Now, if the mutual conductance (gm) (the current drive capability) of the OLED drive TFT **4** is sufficiently high, the OLED **7** can be regarded as being driven ON/OFF digitally. That is, the OLED **7** continues to light up with a virtually constant intensity only for the period that is dependent on the analog signal voltage written in advance. The modulation of this light emission period is visually recognized as a multi-gradation light emission. This recognition is not basically changed by any influences, even if the characteristic of the OLED drive TFT **4** is uneven. Now, it is preferable to make the amplitude of the triangular pulse shown in **FIG. 3** substantially coincident with the amplitude of the analog signal voltage. In regard to the waveform of the triangular pulse, various changes are possible within the gist of the invention. This embodiment takes on the triangular waveform of bilateral symmetry such that the center of the emitting period does not depend upon the gradation of light emission. However, it is possible to use an asymmetrical triangular waveform, a non-linear triangular waveform equivalent to the gamma characteristic modulation, or plural triangular waveforms, etc. to attain different visual characteristics.

[0049] According to the aforementioned embodiment, it is possible to set a non-emission period of light between two consecutive frames by controlling the light-on time of a light emitting means in one frame equal to the "light-on period." This embodiment achieves a smooth animated image display. Further, according to this embodiment, the value of the analog signal voltage written in a capacitance means of each pixel controls the light-on period of the light emitting means without unevenness in different points of time, whereby the gradation display can be achieved. Thus, the irregularities between pixels of display quality can be reduced significantly.

[0050] In the foregoing embodiment, various modifications and changes are possible without departing from the spirit of the invention. For example, this embodiment employs the glass substrate as a TFT substrate; however, it can be replaced by other transparent insulating substrates, such as a quartz substrate or a transparent plastic substrate. Or, a non-transparent substrate can be used, if the OLED **7** is made to emit toward the upper side of the substrate.

[0051] With regard to the TFT switches, this embodiment takes on simply structured single channel analog switches; however, these analog switches can be made up with a CMOS configuration. In the description of this embodiment, the number of pixels, the panel size, and so forth are not described specifically because that the invention will not be restricted by their specifications or formats. In this embodiment, the display signal voltage is assumed as the analog voltage which may be replaced by a discrete gradation voltage, for example, of 64 gradations (6 bits). The number of signal voltage gradations is not limited to a specific value. Further, the triangular waveform can be made into a discrete form confirming with the signal voltage gradations. Also, the common terminal voltage of the OLED **7** is assumed as the ground voltage; however, this voltage can naturally be varied under a specific condition.

[0052] Further, the peripheral drive circuits composed of the gate drive circuit **22**, the signal drive circuit **21**, and so forth are made up with the low temperature polycrystalline silicon TFT circuits. However, these peripheral drive circuits or part of them can be formed and packaged with single crystal LSI circuits.

[0053] In this embodiment, the OLED **7** is adapted as the light emitting means. However, in replacement of this, a general light emitting means including the other inorganic diodes or illuminants can implement the present invention.

[0054] Further, in case of providing the OLED **7** respectively for each color of red, green, and blue for colorization, it is preferable to vary the conditions of the area in conjunction with the drive voltage of the OLED **7** in order to attain the color balance. Here, in case of varying the drive voltage, it is possible in this embodiment to vary and adjust the applied voltage of the power supply line **18** for each color. In this case, it is preferable to array the three colors in stripes to simplify the wiring. Although this embodiment takes the ground voltage as the common terminal voltage of the OLED **7**, it is also possible to separate the terminal of the OLED **7** for each color of red, green, and blue, and to drive each by an appropriate voltage. Further, adjusting the drive voltage appropriately by the display conditions or the display patterns will also correct the color temperature.

[0055] Further, the ratio of the "write period" and the "light-on period" is set to 50% each; however, this ratio can be varied in accordance with the conditions. For example, if the "light-on period" is shortened, the movement of animated images becomes smooth, but the screen is apt to become dark to the same degree. From consideration of these factors, the "light-on period" can appropriately be set to 70%, 30%, 10% of a frame period.

[0056] The various modifications and changes mentioned above can be applied to the other embodiments, which will be described hereunder.

[0057] Second Embodiment

[0058] The second embodiment of the invention is described with reference to **FIG. 4** and FIGS. **5**(*a*) and **5**(*b*).

[0059] **FIG. 4** illustrates the configuration of a pixel **40** in the second embodiment.

[0060] The whole construction and the operation of this embodiment are basically the same as those of the first embodiment, except for a reset TFT switch **41** and a light-on TFT switch **42** being composed of p-channel MOS transistors. Accordingly, the description of the whole construction and the operation is omitted, and the reset TFT switch **41** and

light-on TFT switch **42**, the distinctive features of this embodiment, is explained hereunder.

[**0061**] **FIG. 5**(*a*) illustrates the cross-sectional structure of the reset TFT switch **41**, and **FIG. 5**(*b*) illustrates the cross-sectional structure of the OLED drive TFT **4** and the light-on TFT switch **42**. As described in the first embodiment, both the TFTs are formed by means of the low temperature polycrystalline silicon TFT process. First, on a glass substrate **50** an i (impurity non-introduction)-type polycrystalline silicon thin film **53** is formed through a buffer film **49**. On the i-type poly-Si thin film **53**, p+(high concentration p-type) regions **51** and **55** that serve as the drain and source electrodes are formed. And, a gate electrode **46** is formed on a gate insulating film **48** that overlies the film **53**. Further, the gate electrode **46**, the drain electrode **51**, and the source electrode **55** each have terminal **43**, **44**, **45** connected. Here, the difference between the reset TFT switch **41** shown in **FIG. 5** (*a*) and the light-on TFT switch **42** shown in **FIG. 5**(*b*) lies in that the former adapts the so-called LDD (lightly Doped Drain) transistor structure having p−(low concentration p-type) regions **52**, **54** formed on the poly-Si thin film **53** near the gate. Since it is required to hold the charge corresponding to a signal stored in the pixel capacitor **2**, the OFF-current of the reset TFT switch **41** has to be sufficiently low. On the other hand, the OLED drive TFT **4** has to have a high mutual conductance (gm) to attain a sharp ON/OFF operation of the OLED **7**, and the light-on TFT switch **42** has to make the irregularity of the voltage drop invisible, which results from the OLED **7** drive current and the parasitic resistance. Therefore, the light-on TFT switch **42** does not adapt the LDD transistor structure. The LDD transistor has the advantage of achieving a still lower leak current during OFF; however, it has a higher parasitic resistance during ON, which means that it has a trade-off to equivalently lower the mutual conductance (gm).

[**0062**] In this embodiment, since the pixel **40** is composed of only the p-channel MOS transistors, the layout of the pixel unit is simplified so as to achieve a high definition and high yield. Further, if all the TFTs constituting the pixel peripheral circuits are made up with the p-channel MOS transistors by using, for example, LSI mounting circuits, the process is simplified (by excluding n-channel MOS transistors) thereby reducing production cost.

[**0063**] In this embodiment, the reset TFT switch **41** and the light-on TFT switch **42** use the p-channel MOS transistors, and the positive and negative directions of the drive waveforms of both switches are reverse to those in the first embodiment.

[**0064**] Third Embodiment

[**0065**] The third embodiment of the invention is described with reference to **FIG. 6**.

[**0066**] **FIG. 6** illustrates the configuration of a pixel **59** in the third embodiment.

[**0067**] The whole construction and the operation of this embodiment are basically the same as those of the first embodiment, except for an OLED drive TFT **60** being composed of an n-channel MOS transistor, and the cathode and anode of an OLED **61** being connected in reverse. Accordingly, the description of the common construction and the operation is omitted. The OLED drive TFT **60**, the OLED **61**, and the distinctive features of this embodiment are explained hereunder.

[**0068**] To an electrode **62** opposite to the OLED **61** is applied with a higher voltage than that of the power supply line **18**, and the source of the OLED drive TFT **60** is connected to the power supply line **18** (the same circuit connection as that of the first embodiment). However, since the OLED drive TFT **60** is the n-channel MOS transistor, the upper/lower relation of the analog signal voltage and the triangular pulse become reversed. That is, when the voltage of the triangular pulse is higher than the analog signal voltage written in advance, the OLED drive TFT **60** is turned ON, and when the voltage of the triangular pulse is lower than the analog signal voltage written in advance, the OLED drive TFT **60** is turned OFF. Therefore, the white/black relation of the analog signal voltage is reversed, and the others are the same as the first embodiment.

[**0069**] In this embodiment, since the pixel **59** is composed of only the n-channel MOS transistors, the layout of the pixel unit is simplified to achieve a high definition and high yield. Further, if all the TFTs constituting the pixel peripheral circuits are made up with the n-channel MOS transistors by using, for example, LSI mounting circuits, the process is simplified by excluding p-channel MOS transistors thereby reducing production cost.

[**0070**] Fourth Embodiment

[**0071**] The fourth embodiment of the invention is described with reference to **FIG. 7**.

[**0072**] **FIG. 7** illustrates the configuration of a pixel **66** in the fourth embodiment.

[**0073**] The whole construction and the operation of this embodiment are basically the same as those of the first embodiment, except for an OLED drive TFT **63** being composed of an n-channel MOS transistor. And accompanied with this, the locations of a reset TFT switch **64** and a light-on TFT switch **65** being changed. Accordingly, the description of the common construction and the operation is omitted. The OLED drive TFT **63**, the reset TFT switch **64**, the light-on TFT switch **65**, and the distinctive features of this embodiment are explained hereunder.

[**0074**] Since the OLED drive TFT **63** is the n-channel MOS transistor, the electrode connected to the OLED **7** is the source. Accordingly, the light-on TFT switch **65** is placed between the power supply line **18** and the OLED drive TFT **63**. The reset TFT switch **64** is connected across the drain and the gate of the OLED drive TFT **63**, which is opposite to the OLED **7** as shown in **FIG. 7**. In this embodiment, the construction of the pixel is changed but the basic operation is the same as the third embodiment, and also the merits are the same as the third embodiment. However, since the OLED **7** acts as the source resistor of the OLED drive TFT **63** in this embodiment, the characteristic irregularities of the OLED drive TFT **63** are apt to become visible, as compared with the other embodiments.

[**0075**] Fifth Embodiment

[**0076**] The fifth embodiment of the invention is described with reference to **FIG. 8** and **FIG. 9**.

[**0077**] **FIG. 8** illustrates a configuration of an OLED (Organic Light Emitting Diode) display panel in this embodiment. The construction and the operation of this embodiment are basically the same as those of the first embodiment, except for the signal input switch **23**, the signal

drive circuit **21**, the triangular pulse input switch **26**, and the triangular pulse input line **27** being removed from the upper and lower parts of the signal line **17**, and a 6-bit DA converter circuit **70** having a digital signal input line **71** being provided in replacement of these. Accordingly, the description of the common construction and the operation is omitted. The DA converter circuit **70** and the distinctive features of this embodiment are explained hereunder.

[**0078**] **FIG. 9** illustrates the operation waveform of the light-on control line **32** and the digital signal input line **71** in one frame period in this embodiment. The one frame period is predetermined as 1/60 second in this embodiment, which is divided into the "write period" in the first half and the "light-on period" in the latter half. The light-on control line **32** is turned OFF during the "write period," but it is turned ON during the "light-on period." Thereby, the light-on control line **32** fixes the light-on TFT switches **9** of all the pixels into the ON state simultaneously through the light-on switch lines **19**. And, to the digital signal input line **71**, digital image data is inputted during the "write period," and triangular pulse data is inputted during the "light-on period." Thereby, the analog signal voltage is outputted during the "write period," and the triangular pulse voltage is outputted during the "light-on period" to the signal line **17** through the DA converter circuit **70**. That is, in this embodiment, the employment of the DA converter circuit **70** makes the digital input possible. In addition, it makes the switching operations of the signal input switches **23** and triangular pulse input switches **26** needless. Therefore, the drive signals to the OLED display panel can be simplified.

[**0079**] In this embodiment, the DA converter circuit **70** is also formed integrally on a glass substrate by using the low temperature polycrystalline silicon TFTs to reduce production cost. The DA converter circuit **70** can be also implemented by mounting an LSI. In the latter case, the LSI is mounted as a component which incurs the mounting cost. However, it becomes easily to implement a higher performance 8-bit DA converter circuit.

[**0080**] Sixth Embodiment

[**0081**] The sixth embodiment of the invention is described with reference to **FIG. 10** through **FIG. 12**.

[**0082**] First, the total construction of this embodiment is discussed with **FIG. 10**.

[**0083**] **FIG. 10** illustrates a configuration of an OLED (Organic Light Emitting Diode) display panel in this embodiment. Pixels **70** each having the OLED **7** as a pixel luminous object are arrayed in a matrix form on a display unit. Each pixel is connected to the drive circuits furnished surrounding the display unit through a reset line **78**, a signal line **77**, a light-on switch line **79**, and an input switch line **83**, etc. The reset line **78** and the input switch line **83** are connected to the scanning output of a gate drive circuit **82**. The signal line **77** is connected to a signal drive circuit **81**. To the signal drive circuit **81** is connected the signal input line **28** that inputs the analog signal voltage. Since the signal drive circuit **81** is an analog signal voltage distribution circuit configured with generally known shift registers and analog switches, its details thereof are omitted. The light-on switch line **79** is outputted from a light-on switch OR gate **80**. To the light-on switch OR gate **80** are inputted the scanning output of the gate drive circuit **82** and the light-on control line **32**. Since the gate drive circuit **82** is made up with generally known shift registers, its details thereof are omitted. Here, all the circuits of the pixel **70**, the gate drive circuit **82**, and the signal drive circuit **81**, etc., illustrated in **FIG. 10** are formed on a glass substrate by using the generally known low temperature polycrystalline silicon TFTs. In each pixel, the signal line **77** is connected through an input TFT switch **71** (controlled by the input switch line **83** and a pixel capacitor **72**) to the gate of an OLED drive TFT **74** (a p-channel MOS transistor). The source of the OLED drive TFT **74** is connected to the power supply line **18**. The drain of the OLED drive TFT **74** is connected by way of a light-on TFT switch **76** (controlled by the light-on switch line **79**) to one end of the OLED **7**. The other end of the OLED **7** is connected to the common ground. Further, across the gate and the drain of the OLED drive TFT **74** is furnished a reset TFT switch **75** that is controlled by the reset line **78**. Across the gate and the source of the OLED drive TFT **74** is furnished a retention capacitor **73**.

[**0084**] Next, the operation of this embodiment is explained with **FIG. 11** and **FIG. 12**.

[**0085**] **FIG. 11** illustrates the operation waveform of the light-on control line **32** in one frame period in this embodiment. The one frame period is predetermined as 1/60 second in this embodiment, which is divided into a "write period" in the first half, as well as an "idle period" and a "light-on period" in the latter half. The light-on control line **32** is turned OFF during the "write period" and the "idle period," but turned ON during the "light-on period." Thereby, the light-on control line **32** fixes the light-on TFT switches **76** of all the pixels into the ON state simultaneously through the light-on switch lines **79**. Further, during the "write period," the gate drive circuit **82** scans the reset line **78**, the light-on switch line **79**, and the input switch line **83** The analog signal voltage is sequentially inputted to the signal line **77**. During the "idle period" and the "light-on period," the gate drive circuit **82** is put into pause, and the signal input to the signal line **77** is put into pause.

[**0086**] **FIG. 12** illustrates the waveform timing of the reset TFT switch **75**, of the light-on TFT switch **76**, of the input TFT switch **71**, and of the data input on the signal line **77** in each pixel according to the "write period", and as well as the "idle period", and the "light-on period."

[**0087**] During the "write period" (being the first half of one frame), the gate drive circuit **82** sequentially scans each of the pixel rows. Synchronously, the signal drive circuit **81** writes the analog signal voltage into the signal lines **77** as signal data. In particular, in the pixel on the n-th row selected by the gate drive circuit **82**, the light-on TFT switch **76** and the input TFT switch **71** are turned ON first, and then the reset TFT switch **75** is turned ON. As these switches are turned ON, the OLED drive TFT **74** is put into a diode connection with the same potential applied across the gate and the drain thereof. Accordingly, applying a specific voltage to the power supply line **18** in advance will put the OLED drive TFT **74** and the OLED **7** into the conductive state. Next, as the light-on TFT switch **76** is turned OFF (timing (**1**)), the OLED drive TFT **74** and the OLED **7** are forcibly put into the OFF state. At this moment, since the gate and the drain of the OLED drive TFT **74** are short-circuited through the reset TFT switch **75**, the gate voltage of the OLED drive TFT **74** (whose gate is connected to one

end of the pixel capacitor **72**) is automatically reset to a voltage lower by the threshold voltage Vth than the voltage of the power supply line **18**. At this moment, the analog signal voltage of zero (reference) level is inputted as the signal line **77** data to the other end of the pixel capacitor **72** through the input TFT switch **71**.

[**0088**] Next, as the reset TFT switch **75** is turned OFF, the potential difference between both ends of the pixel capacitor **72** is stored to remain intact in the pixel capacitor **72**. Next, as the specific analog signal voltage is applied as the signal line **77** data (timing (**2**)), the voltage across both the ends of the pixel capacitor **72** is shifted by a voltage equivalent to a difference between the zero (reference) level analog signal voltage and the analog signal voltage. Also, to the gate of the OLED drive TFT **74** is applied the voltage shifted by the voltage equivalent to the difference from the previous reset voltage, and this voltage is held by the retention capacitor **73**. Thereafter, the input TFT switch **71** is turned OFF, and the signal line **77** data is returned to the zero (reference) level (timing (**3**)) thereby completing the signal writing to the pixels on the n-th row. Thereafter, during the period of scanning the pixels on the other rows, the light-on TFT switch **76** of the concerned pixel is always OFF. Accordingly, the OLED **7** will not light up regardless of a level of the analog signal voltage written into the gate of the OLED drive TFT **74**. In this manner, the writing of the analog signal voltage into the pixels is carried out sequentially by each row. The "write period" in the first half of a frame ends at the time when the write into all the pixels is completed.

[**0089**] Next, the gate drive circuit **82** is put into pause in the latter half of a frame. During the "idle period," all the switches shown in **FIG. 12** are turned OFF, and the states of the pixels are not changed. During the subsequent "light-on period," the light-on control line **32** turns ON simultaneously the light-on TFT switches **76** of all the pixels by way of the light-on switch OR gates **80** and the light-on switch lines **79**. Here, as mentioned above, since the voltage corresponding to the analog signal voltage written into each pixel is applied to the gate of the OLED drive TFT **74**, a signal current corresponding to this voltage flows through the OLED **7** of each pixel to perform a gradation emission. As such, the unevenness of the threshold voltage Vth of the gate of the OLED drive TFT **74** is cancelled.

[**0090**] According to the aforementioned embodiment, it is possible to set a non-emission period of light between two consecutive frames by controlling the light-on time of a light emitting means in one frame equal to the "light-on period." This embodiment achieves a smooth animated image display. And, since the "idle period" is newly provided, it becomes possible to easily vary the "light-on period" with the clock frequency of the gate drive circuit **82** maintained to a constant. In this embodiment, only an adjustment of the timing signal of the light-on control line **32** will easily vary the visual characteristic and the visual display intensity of animated images.

[**0091**] Seventh Embodiment

[**0092**] The seventh embodiment of the invention is described with reference to **FIG. 13** and **FIG. 14**.

[**0093**] First, the total construction of this embodiment is discussed with **FIG. 13**.

[**0094**] **FIG. 13** illustrates a configuration of an OLED (Organic Light Emitting Diode) display panel in this embodiment. Pixels **90** each having the OLED **7** as a pixel luminous object are arrayed in a matrix form on a display unit. Each pixel is connected to the drive circuits furnished surrounding the display unit through a signal line **97**, a light-on switch line **99**, and an input switch line **103**, etc. The input switch line **103** is connected to the scanning output of a gate drive circuit **102**. The signal line **97** is connected to a signal drive circuit **101**. To the signal drive circuit **101** is connected the signal input line **28** that inputs the analog signal voltage. Since the signal drive circuit **101** is an analog signal voltage distribution circuit configured with generally known shift registers and analog switches, its details thereof are omitted here. The light-on switch line **99** is outputted from a light-on switch OR gate **100**. To the light-on switch OR gate **100** are inputted the scanning output of the gate drive circuit **102** and the light-on control line **32**. Since the gate drive circuit **102** is made up with generally known shift registers, its details thereof are omitted. Here, all the circuits of the pixel the gate drive circuit **102**, and the signal drive circuit **101**, etc., illustrated in **FIG. 13** are formed on a glass substrate by using the generally known low temperature polycrystalline silicon TFTs. In each pixel, the signal line **97** is connected through an input TFT switch **91** controlled by the input switch line **103** to the gate of an OLED drive TFT **94** (a p-channel MOS transistor). The source of the OLED drive TFT **94** is connected to the power supply line **18**. The drain of the OLED drive TFT **94** is connected by way of a light-on TFT switch **96** controlled by the light-on switch line **99** to one end of the OLED **7**. The other end of the OLED **7** is connected to the common ground. Further, across the gate and source of the OLED drive TFT **94** is furnished a retention capacitor **93**.

[**0095**] Next, the operation of this embodiment is explained with **FIG. 14**.

[**0096**] **FIG. 14** illustrates the waveform timing of the light-on TFT switch **96**, of the input TFT switch **91**, and of the data input on the signal line **97** in each pixel according to the "write period" and the "light-on period."

[**0097**] During the "write period" (being the first half of one frame), the gate drive circuit **102** sequentially scans each of the pixel rows. Synchronously, the signal drive circuit **101** writes the analog signal voltage into the signal lines **97** as a signal data. In particular, in the pixel on the n-th row selected by the gate drive circuit **102**, the light-on TFT switch **96** and the input TFT switch **91** are turned ON, and the analog signal voltage is applied to the pixel as the signal line **97** data. Here, applying a specific, voltage to the power supply line **18** in advance will put the OLED drive TFT **94** and the OLED **7** into the conductive state, and the OLED **7** will emit with a brightness corresponding to the analog signal voltage. Next, as the input TFT switch **91** is turned OFF, the analog signal voltage at this moment is stored in the retention capacitor **93**, and then the light-on TFT switch **96** is turned OFF, which immediately stops the emission of the OLED **7**. Thereafter, during the period of scanning the pixels of the other rows, the light-on TFT switch **96** of the concerned pixel is always OFF. Accordingly, the OLED **7** will not light up regardless of a level of the analog signal voltage written into the gate of the OLED drive TFT **94**. In this manner, the writing of the analog signal voltage into the pixels is carried out sequentially by each row, and the "write period" in the first half of one frame ends at the time when the writing into all the pixels is completed.

[0098] Next, the gate drive circuit **102** is put into pause in the "light-on period" (in the latter half of one frame), and the light-on control line **32** turns ON simultaneously the light-on TFT switches **96** of all the pixels by way of the light-on switch OR gates **100** and the light-on switch lines **99**. Here, as mentioned above, since the analog signal voltage written into each pixel is stored in the gate of the OLED drive TFT **94**, a signal current corresponding to this voltage flows through the OLED **7** of each pixel to perform a gradation emission.

[0099] According to the aforementioned embodiment, it is possible to set a non-emission period of light between two consecutive frames by controlling the light-on time of a light emitting means in one frame equal to the "light-on period." This embodiment achieves a smooth animated image display.

[0100] Eighth Embodiment

[0101] The sixth embodiment of the invention is described with reference to **FIG. 15** and **FIG. 16**.

[0102] First, the total construction of this embodiment is discussed with **FIG. 15**.

[0103] **FIG. 15** illustrates a configuration of an OLED (Organic Light Emitting Diode) display panel in this embodiment. Pixels **110** each having the OLED **7** as a pixel luminous object are arrayed in a matrix form on a display unit Each pixel is connected to the drive circuits furnished surrounding the display unit through a reset line **118**, a signal line **117**, a light-on switch line **119**, and an input switch line **123**, etc. The reset line **118** and the input switch line **123** are connected to the scanning output of a gate drive circuit **122**. The signal line **117** is connected to a current output DA converter circuit **121**. To the current output DA converter circuit **121** is connected a digital signal input line **29** that inputs a digital signal. Here, the current output DA converter circuit **121** has the same configuration as the general voltage output DA converter circuit, except for the output being a gradation current. The light-on switch line **119** is connected commonly to all the pixels. Since the gate drive circuit **122** is made up with generally known shift registers, its details thereof are omitted. Here, all the circuits of the pixel **110**, the gate drive circuit **122**, and the current output DA converter circuit **121**, etc., illustrated in **FIG. 15** are formed on a glass substrate by using the generally known low temperature polycrystalline silicon TFTs. In each pixel, the signal line **117** is connected through an input TFT switch **111** (controlled by the input switch line **123**) to the drain of an OLED drive TFT **114** (being a p-channel MOS transistor). The source of the OLED drive TFT **114** is connected to the power supply line **18**. Further, the drain of the OLED drive TFT **114** is connected by way of a light-on TFT switch **116** (controlled by the light-on switch line **119**) to one end of the OLED **7**. The other end of the OLED **7** is connected to the common ground. Further, across the gate and drain of the OLED drive TFT **114** is furnished a reset TFT switch **115** controlled by the reset line **118**. Across the gate and source of the OLED drive TFT **114** is furnished a retention capacitor **113**.

[0104] Next, the operation of this embodiment is explained with **FIG. 16**.

[0105] **FIG. 16** illustrates the waveform timing of the reset TFT switch **115**, of the light-on TFT switch **116**, of the input TFT switch **111**, and of the data input on the signal line **117** in each pixel according to the "write period" and the "light-on period."

[0106] During the "write period" (being the first half of one frame), the gate drive circuit **122** sequentially scans each of the pixel rows. Synchronously, the current output DA converter circuit **121** writes the analog signal current into the signal lines **117** as signal data. In particular, in the pixel on the n-th row selected by the gate drive circuit **122**, the input TFT switch **111** and the reset TFT switch **115** are turned ON. As these switches are turned ON, the OLED drive TFT **114** is put into a diode connection with the same potential applied across the gate and drain thereof, and the analog signal current flows toward the power supply line **18** by way of the OLED drive TFT **114**. At this moment, across the source and drain of the OLED drive TFT **114** appears a gate voltage corresponding to the analog signal current. Next when the reset TFT switch **115** is turned OFF, the gate voltage corresponding to the analog signal current is stored in the retention capacitor **113**. Thereafter, the analog signal current on the signal line **117** is cut off and the input TFT switch **111** is turned OFF thereby completing the signal writing to the pixels on the n-th row. Here, during the "write period," the light-on TFT switch **116** is always OFF. Accordingly, the OLED **7** will not light up regardless of a voltage level written in the retention capacitor **113**, namely, the gate of the OLED drive TFT **114**. In this manner, the writing of the analog signal voltage into the pixels is carried out sequentially by each row, and the "write period" in the first half of a frame ends at the time when the writing into all the pixels is completed.

[0107] Next, the gate drive circuit **122** is put into pause in the "light-on period" (in the latter half of one frame) and the light-on switch line **119** turns ON simultaneously the light-on TFT switches **116** of all the pixels. Here, as mentioned above, since, at the gate of the OLED drive TFT **114**, the gate voltage corresponding to the analog signal current inputted to each pixel is held by the retention capacitor **113**, a current equivalent to the analog signal current flows through the OLED **7** of each pixel to perform a gradation emission. Therefore, the characteristic irregularities of the OLED drive TFT **114** are cancelled.

[0108] According to the aforementioned embodiment, it is possible to set a non-emission period of light between two consecutive frames by controlling the light-on time of a light emitting means in one frame equal to the "light-on period." This embodiment achieves a smooth animated image display.

[0109] Ninth Embodiment

[0110] The ninth embodiment of the invention is described with reference to **FIG. 17** through **FIG. 19**. The construction and the operation of this embodiment are basically the same as those of the sixth embodiment, except that a light-on TFT switch **131** furnished on each pixel is scanned through a light-on switch line **132** by a light-on switch AND gate **130**. Accordingly, the description of the common construction and the operation is omitted. The light-on TFT switch **131** and the distinctive features of this embodiment are explained hereunder.

[0111] **FIG. 17** illustrates a configuration of an OLED (Organic Light Emitting Diode) display panel in this

embodiment. As mentioned above, the light-on TFT switch **131** furnished on each pixel is connected to the light-on switch AND gate **130** through the light-on switch line **132**. And, the light-on switch AND gate **130** has the scanning output from the gate drive circuit **82** and a light-on control line **133** inputted.

[**0112**] Next, the operation of this embodiment is explained.

[**0113**] **FIG. 18** illustrates the operation waveform of the light-on control line **133** in one frame period in this embodiment. The light-on control line **133**, being turned ON during the "write period" in the first half, lights up the OLED **7** of a specific pixel. Being turned OFF during the "light-off period" in the latter half, it turns OFF the light-on TFT switch **131** of each pixel thereby forcibly lighting OFF all the pixels of the OLED **7**.

[**0114**] **FIG. 19** illustrates the waveform timing of the reset TFT switch **75**, of the light-on TFT switch **131**, of the input TFT switch **71**, and of the data input on the signal line **77** in each pixel according to the "write period" and the "light-off period." The basic operation is the same as the foregoing sixth embodiment; however, it differs in that the light-on TFT switch **131** is always ON while the concerned row in the write period is not selected, and that the light-on TFT switch **131** is always OFF during the light-off period. Thereby in this embodiment, it is possible to set a non-emission period of light between two consecutive frames by setting the "light-on period" equal to the lighting of a light emitting means in one frame. This embodiment achieves a smooth animated image display.

[**0115**] Tenth Embodiment

[**0116**] The tenth embodiment of the invention is described with reference to **FIG. 20** and **FIG. 21**. The construction and the operation of this embodiment are basically the same as those of the sixth embodiment, except that a light-on TFT switch **141** furnished on each pixel is scanned through a light-on switch line **142** by a light-on switch drive circuit **144**. Accordingly, the description of the common construction and the operation is omitted. The light-on TFT switch **141** and the distinctive features of this embodiment are explained hereunder.

[**0117**] **FIG. 20** illustrates a configuration of an OLED (Organic Light Emitting Diode) display panel in this embodiment. As mentioned above, the light-on TFT switch **141** furnished on each pixel is connected to the light-on switch drive circuit **144** through the light-on switch line **142**. And, the gate drive circuit **143** is connected only to the reset line **78** and the input switch line **83**.

[**0118**] Next, the operation of this embodiment is explained.

[**0119**] **FIG. 21** typically illustrates the scanning pattern of the gate drive circuit **143** and the light-on switch drive circuit **144** on each pixel row. In the same manner as the sixth embodiment, the gate drive circuit **143** sequentially scans and drives the reset TFT switch **75** and the input TFT switch **71**. The light-on switch drive circuit **144** sequentially scans and drives the light-on TFT switch **141** from the first row to the last row of the pixels.

[**0120**] Now, the gate drive circuit **143** performs the scanning by each row of the pixels. One frame period includes the scanning time from the first row until the completing the last row. On the other hand, the light-on switch drive circuit **144** scans the light-on TFT switch **141** to temporarily turn ON and OFF with a delay of time for scanning k rows. Thus, the time required for the scanning of k rows is defined as the light-on period.

[**0121**] Thus in this embodiment, it is possible to set a non-emission period of light between two consecutive frames by setting the "light-on period" for each pixel equal to the lighting period of a light emitting means in one frame. This embodiment achieves a smooth animated image display.

[**0122**] Eleventh Embodiment

[**0123**] The eleventh embodiment of the invention is described with reference to **FIG. 22**. **FIG. 22** illustrates a configuration of an animation display device (digital television) **150** of this embodiment.

[**0124**] A radio or wired input interface circuit **151** receives a compressed image data, etc., as an animated data based on the MPEG standard from the outside. The output of the input interface circuit **151** is connected to a data bus **153** through an I/O (Input/Output) circuit **152**. Besides, the data bus **153** is connected to a microprocessor **154** that decodes the MPEG signal, to a display panel controller **155** that incorporates a DA converter, and to a frame memory, etc. Further, the output of the display panel controller **155** enters into an OLED display panel **160**, which includes a pixel matrix **161**, the gate drive circuit **22**, and the signal drive circuit **21**, and so forth. Further, the animation display device **150** includes a triangular pulse generation circuit **162** and a secondary battery **157**. The output of the triangular pulse generation circuit **162** also enters into the OLED display panel **160**. Here, the OLED display panel **160** possesses the same construction and function as those of the aforementioned first embodiment such that the description of the internal construction and operation thereof is omitted.

[**0125**] The operation of the eleventh embodiment will be explained. First, the input interface circuit **151** fetches compressed image data from the outside according to an instruction, and transfers the image data to the microprocessor **154** and the frame memory **156** through the I/O circuit **152**. Receiving instructions from a user, the microprocessor **154** drives the whole animation display device **150** as required, decodes the compressed image data, processes signals, and displays information. The image data having the signal processing applied are stored temporarily in the frame memory **156** as needed.

[**0126**] When the microprocessor **154** issues a display instruction, the frame memory **156** sends image data to the OLED display panel **160** through the display panel controller **155**, and the pixel matrix **161** displays the inputted image data in real time. At the same time, the display panel controller **155** outputs a specific timing pulse necessary for displaying the image. Synchronously, the triangular pulse generation circuit **162** outputs a pixel drive voltage of triangular waveform. The OLED display panel **160**, using these signals, displays in real time the display data generated from the 6-bit image data on the pixel matrix **161** as mentioned in the discussion of the first embodiment. Here, the secondary battery **157** supplies the power for driving the whole animation display device **150**.

[0127] This embodiment allows a satisfactory display of animated images, and provides the animation display device **150** that sufficiently suppresses irregularities of the display quality among pixels.

[0128] Further, this embodiment employs the OLED display panel described in the first embodiment as the image display device; however, obviously, various display panels described in the other embodiments can be incorporated into this embodiment.

[0129] According to this invention, it is possible to provide an image display device that has a satisfactory display quality of animated images and sufficiently suppresses the irregularities of the display quality among pixels.

[0130] The principles, preferred embodiments and modes of operation of the present invention have been described in the foregoing specification. However, the invention which is intended to be protected is not limited to the particular embodiments disclosed. The embodiments described herein are illustrative rather than restrictive. Variations and changes may be made by others, and equivalents employed, without departing from the spirit of the present invention. Accordingly, it is expressly intended that all such variations, changes and equivalents which fall within the spirit and scope of the present invention as defined in the claims, be embraced thereby.

What is claimed is:

1. An image display device comprising:

a display unit composed of plural pixels each having a light emitting means;

a signal line for inputting an analog display signal to the pixels;

a light emitting drive means or driving the light emitting means based on the analog display signal inputted to the pixels through the signal line; and

a light emitting control switch means for controlling a light-on or a light-off of the light emitting means during image-displaying,

wherein the light emitting means in each pixel connected to one end of the light emitting drive means.

2. An image display device as claimed in claim 1, wherein the light emitting control switch means is provided between the light emitting drive means and the light emitting means.

3. An image display device as claimed in claim 1, wherein the light emitting means is an organic light emitting diode.

4. An image display device as claimed in claim 1, wherein the light emitting drive means and the light emitting control switch means are polycrystalline silicon thin film transistors provided on a transparent substrate.

5. An image display device as claimed in claim 1, wherein the light emitting control switch means in each pixel is constructed to turn ON or OFF simultaneously.

6. An image display device as claimed in claim 5, wherein the light emitting control switch means is constructed to turn ON when the analog display signal is inputted to the pixels.

7. An image display device as claimed in claim 1, wherein the light emitting control switch means is constructed to turn ON when the analog display signal is inputted to the pixels and to turn OFF after a predetermined light-on time period.

8. An image display device comprising:

a display unit composed of plural pixels each having a light emitting means;

a signal line for inputting an analog display signal to the pixels; and

a light emitting drive means for driving the light emitting means based on the analog display signal inputted to the pixels through the signal line, wherein

the light emitting drive means provided for each of the pixels is a field effect transistor,

the signal line is connected to a gate of the field effect transistor through at least one capacitance means,

one of a source or a drain of the field effect transistor is connected to a power supply means, the other of the source and the drain is connected to the light emitting means, and at least one of the source and the drain is connected via a first switch to the power supply means or the light emitting means, and

the field effect transistor is constructed to apply one of the analog display signal and a virtually triangular pulse signal to the gate thereof through the capacitance means.

9. An image display device as claimed in claim 8, wherein the light emitting means is an organic light emitting diode.

10. An image display device as claimed in claim 8, wherein the light emitting drive means and the light emitting control switch means are polycrystalline silicon thin film transistors provided on a transparent substrate.

11. An image display device as claimed in claim 8, wherein a second switch is provided between the gate and the drain of the field effect transistor, while the first switch is provided between the drain and the light emitting means.

12. An image display device as claimed in claim 11, wherein the field effect transistor, the first switch, and the second switch are TFTs of the same conductivity type.

13. An image display device as claimed in claim 8, wherein both the analog display signal and the virtually triangular pulse signal are generated by a common DA converter.

14. An image display device as claimed in claim 13, wherein the DA converter is composed of polycrystalline silicon thin film transistors.

15. An image display device as claimed in claim 1, further comprising a display signal processing unit for storing at least one display signal taken externally to be processed to form an analog display signal.

16. An image display device as claimed in claim 1, wherein a time period ratio of the light-on and the light-off ranges from 1:9 to 9:1.

17. An image display device as claimed in claim 1, wherein a time period ratio of the light-on and the light-off is 1:1.

18. An image display device as claimed in claim 11, wherein the light-on and the light-off are alternated by alternating the first switch and the second switch.

19. An image display device as claimed in claim 11, wherein the first switch and the second switch are a drive switch and signal input switch.

20. An animation display device comprising:

an image display device including:

a display unit composed of plural pixels each having a light emitting means;

a signal line for inputting an analog display signal to the pixels;

a light emitting drive means or driving the light emitting means based on the analog display signal inputted to the pixels through the signal line; and

a light emitting control switch means for controlling a light-on or a light-off of the light emitting means during image-displaying, the light emitting means in each pixel connected to one end of the light emitting drive means;

an input interface circuit for receiving animated image data;

a microprocessor for decoding the animated image data;

a display panel controller incorporating a DA converter;

a triangular pulse generation circuit;

a first battery and a secondary battery; and

a frame memory.

* * * * *