US008750919B2

(12) **United States Patent**
Hwang

(10) **Patent No.: US 8,750,919 B2**
(45) **Date of Patent: Jun. 10, 2014**

(54) **MOBILE TERMINAL HAVING FLEXIBLE PRINTED CIRCUIT BOARD**

(75) Inventor: **Won Gi Hwang**, Suwon-si (KR)

(73) Assignee: **Samsung Electronics Co., Ltd.**, Suwon-si (KR)

(*) Notice: Subject to any disclaimer, the term of this patent is extended or adjusted under 35 U.S.C. 154(b) by 391 days.

(21) Appl. No.: **12/794,913**

(22) Filed: **Jun. 7, 2010**

(65) **Prior Publication Data**

US 2011/0003622 A1 Jan. 6, 2011

(30) **Foreign Application Priority Data**

Jul. 6, 2009 (KR) 10-2009-0060976

(51) **Int. Cl.**
H04M 1/00 (2006.01)

(52) **U.S. Cl.**
USPC **455/550.1**; 455/575.1; 455/575.4; 361/749

(58) **Field of Classification Search**
USPC 455/550.1, 575.1, 575.4; 361/736, 748, 361/749, 760, 761
See application file for complete search history.

(56) **References Cited**

U.S. PATENT DOCUMENTS

7,371,090	B2 *	5/2008	Hashizume	439/164
2005/0030233	A1 *	2/2005	Kim et al.	343/702
2005/0237725	A1 *	10/2005	Cho et al.	361/752
2006/0050490	A1	3/2006	Ootani	
2007/0004471	A1 *	1/2007	Wang	455/575.1
2007/0103848	A1 *	5/2007	Araki et al.	361/600
2008/0062661	A1	3/2008	Choi et al.	
2009/0016030	A1 *	1/2009	Takahashi	361/748
2009/0021899	A1 *	1/2009	Chen	361/680
2009/0052126	A1 *	2/2009	Komiyama	361/679.56
2009/0137293	A1 *	5/2009	Yoo et al.	455/575.4
2009/0209299	A1 *	8/2009	Lin et al.	455/572
2009/0279008	A1 *	11/2009	Lee et al.	349/40
2009/0296330	A1 *	12/2009	Ho et al.	361/679.4
2009/0303691	A1 *	12/2009	Choi	361/768
2010/0007596	A1 *	1/2010	Cho et al.	345/98
2010/0159714	A1 *	6/2010	Zieger	439/55
2010/0188826	A1 *	7/2010	Yeh	361/749
2010/0197368	A1 *	8/2010	Kawate et al.	455/575.1
2010/0290198	A1 *	11/2010	Rannikko et al.	361/736

FOREIGN PATENT DOCUMENTS

JP	2006-41193	A	2/2006
JP	2007-13014	A	1/2007
KR	2005003265	*	10/2005

* cited by examiner

Primary Examiner — Kashif Siddiqui
Assistant Examiner — Mong-Thuy Tran
(74) *Attorney, Agent, or Firm* — Jefferson IP Law, LLP

(57) **ABSTRACT**

A mobile terminal having a flexible printed circuit board is disclosed. The mobile terminal includes a first main body unit having a first electronic circuit board mounted therein, a second main body unit movably connected to the first main body unit and having a second electronic circuit board mounted therein, and a flexible printed circuit board (FPCB) for electrically connecting the first electronic circuit board and the second electronic circuit board to transmit an electric signal therebetween. The FPCB includes an FPCB connection unit, a first connector and a second connector formed at opposite ends of the FPCB connection unit and connected to the first electronic circuit board and second electronic circuit board, respectively, and a ground unit formed on the FPCB connection unit between the first connector and second connector and connected to a ground of the first electronic circuit board.

8 Claims, 6 Drawing Sheets

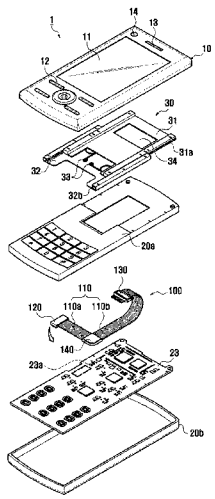

AliveCor, Inc. Exhibit 1012
IPR2023-00948
Ex. 1012.1

FIG. 1

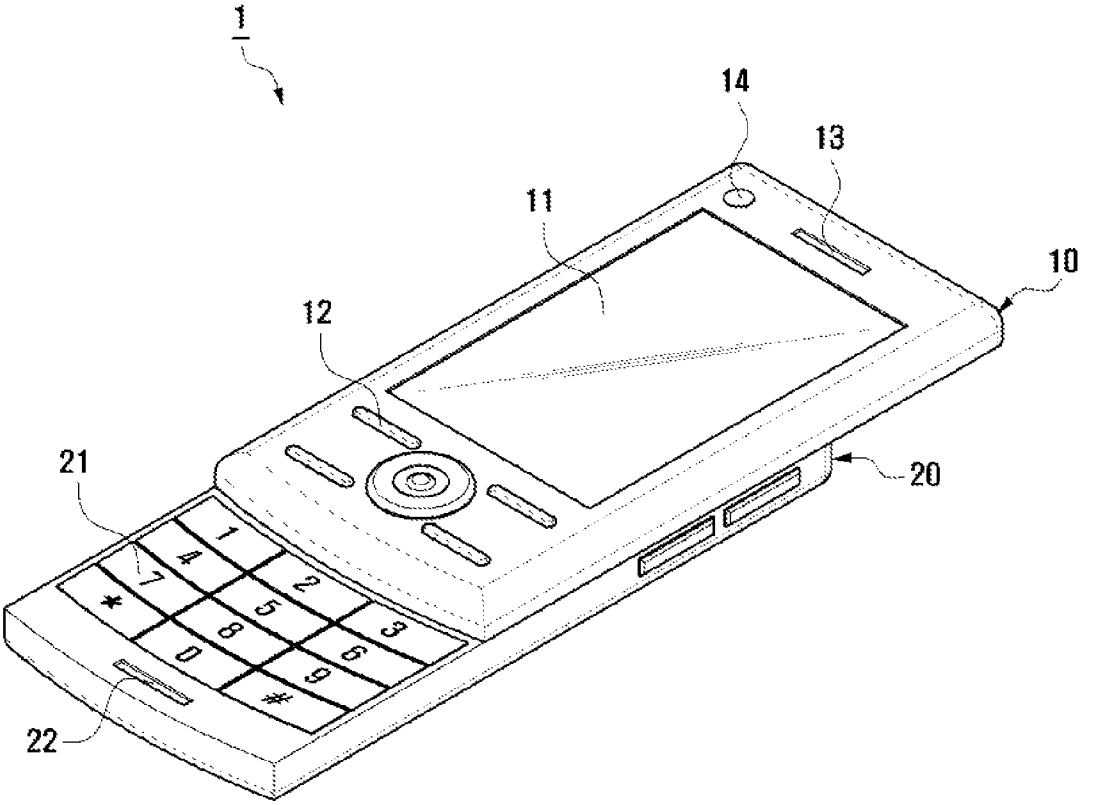

FIG. 2

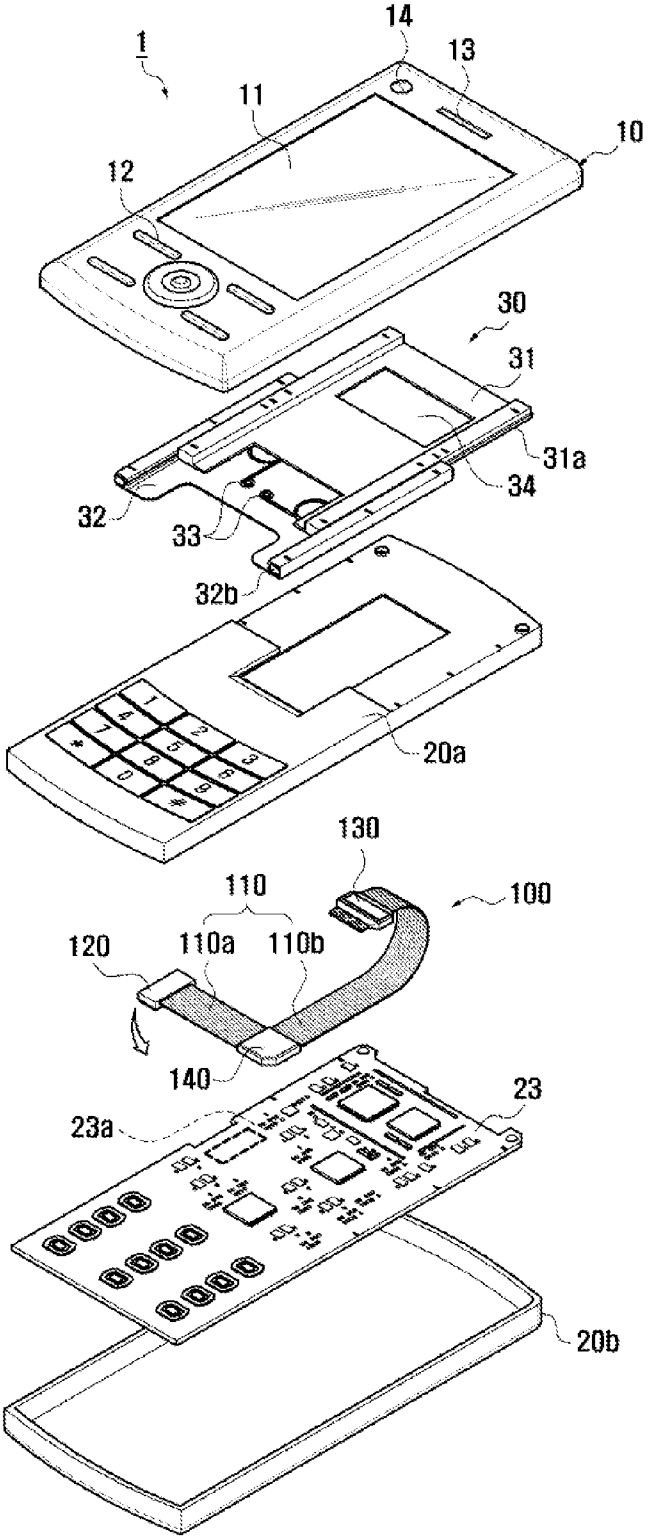
1
14
13
11
10
12
30
31
31a
34
32
33
32b
20a
130
110
100
120
110a
110b
140
23
23a
20b

FIG. 3

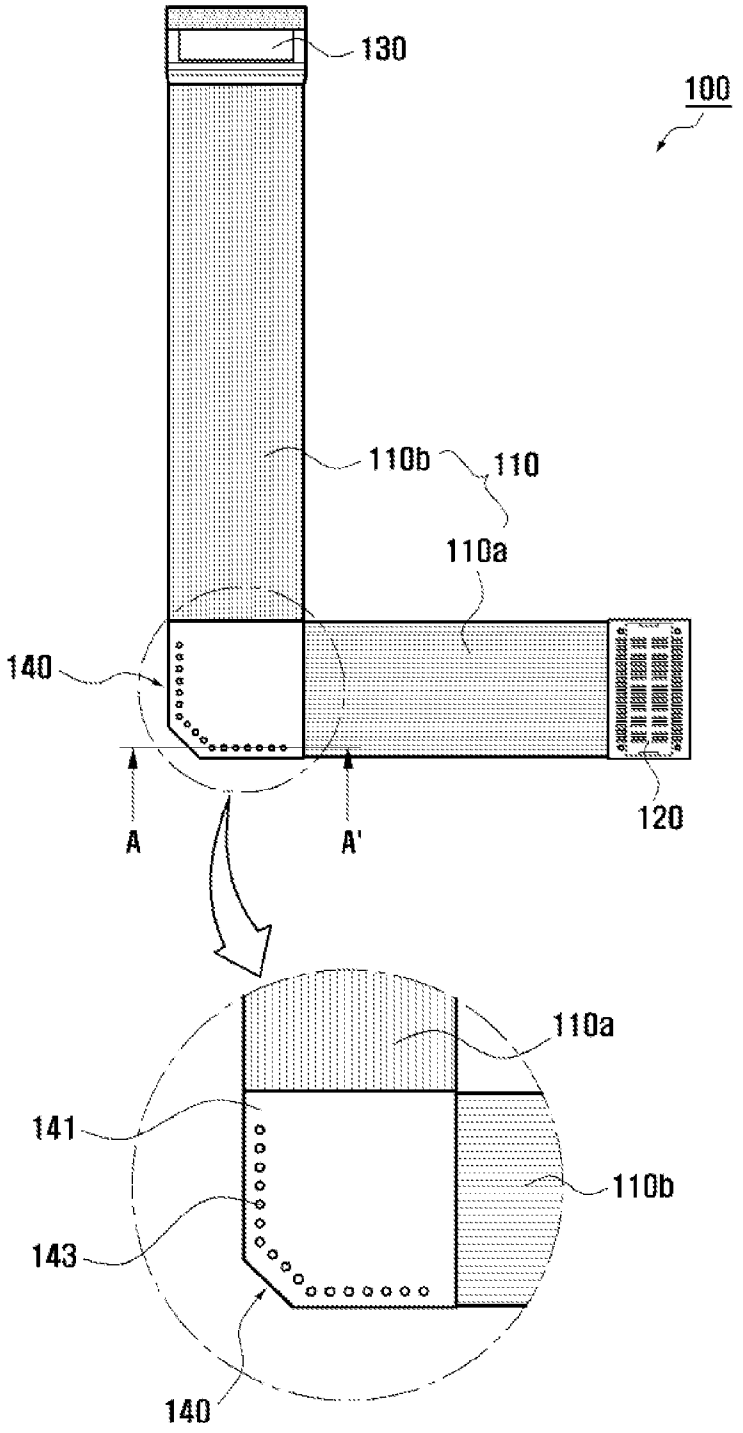

FIG. 4

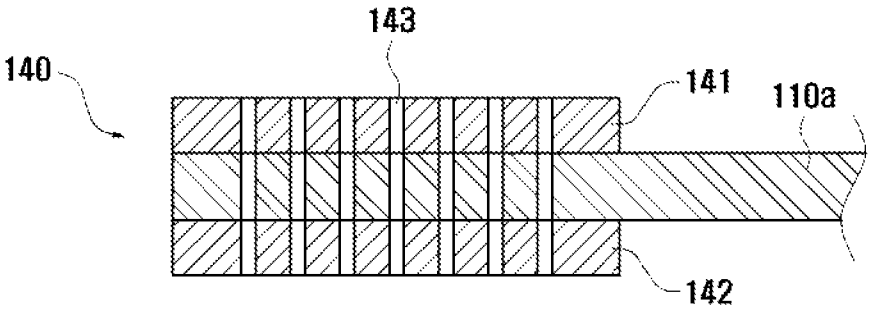

Section A-A'

FIG. 5

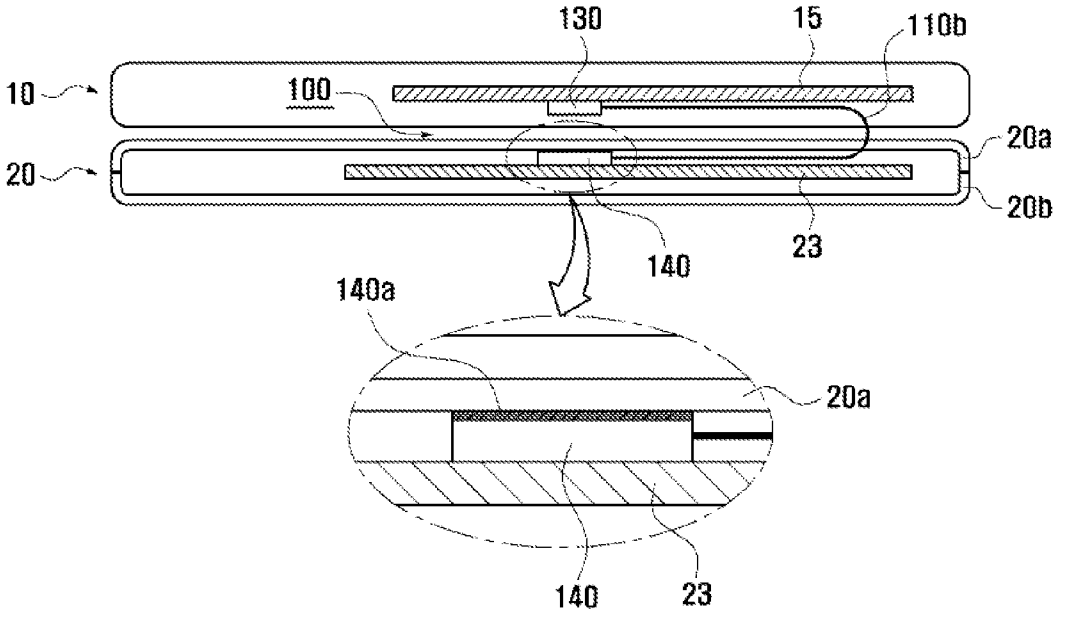

FIG. 6A

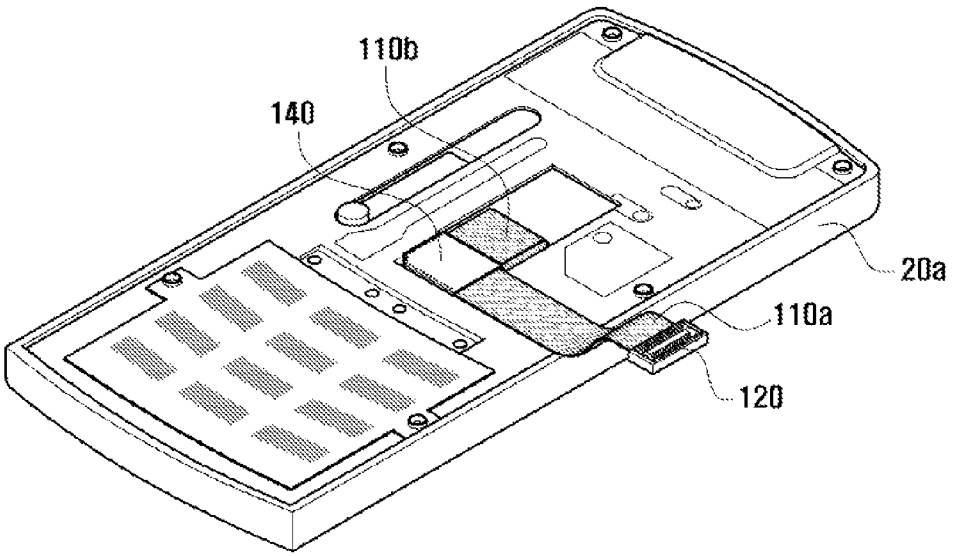

FIG. 6B

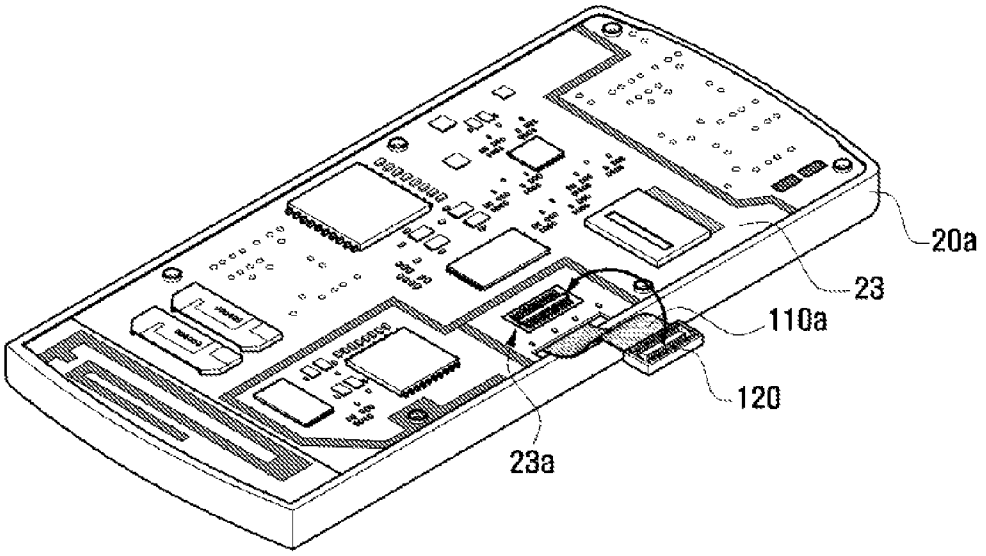

MOBILE TERMINAL HAVING FLEXIBLE PRINTED CIRCUIT BOARD

PRIORITY

This application claims the benefit under 35 U.S.C. §119(a) of a Korean patent application filed on Jul. 6, 2009 in the Korean Intellectual Property Office and assigned Serial No. 10-2009-0060976, the entire disclosure of which is hereby incorporated by reference.

BACKGROUND OF THE INVENTION

1. Field of the Invention

The present invention relates to a mobile terminal. More particularly, the present invention relates to a mobile terminal having a flexible printed circuit board.

2. Description of the Related Art

A mobile terminal is an electronic device by which a user may freely use functions of wireless communication, network connection, and digital broadcast reception regardless of a user's time and location. Nowadays, mobile terminals have been developed to perform a variety of functions, such as Internet connection, digital broadcast reception, document writing, and game playing, in addition to voice communication. Additionally, while the functions available to mobile terminals are increasing to meet user demand, the mobile terminals themselves are becoming smaller and slimmer.

An electronic circuit board mounted with multiple electronic parts is installed in the mobile terminal. The electronic circuit board transmits and receives electrical signals to and from function modules of the mobile terminal, such as a display unit and a camera unit. As the mobile terminal becomes smaller, a Flexible Printed Circuit Board (FPCB) may be used to connect the electronic circuit board and the display unit and camera unit of the mobile terminal and transmit and receive electrical signals including various data therebetween to effectively utilize internal space of the mobile terminal. An FPCB is generally used for slide type mobile terminals.

As mobile terminals adopt high performance display units and camera units, and as data traffic between the electronic circuit board and display unit and camera unit increases and operating frequency of data expands to a high frequency region, increased radiation and ElectroStatic Discharge (ESD) effects on the mobile terminal become a concern. Because only a ground line of a pattern form is located on the FPCB, and the FPCB is connected to a ground of the electronic circuit board only through connectors formed at two ends, a sufficient ground between the electronic circuit board, the display unit, and the camera unit cannot be provided. Additionally, because a bypass path to avoid noise and ESD surges affecting the radiation ability is not provided, the shielding capability of the FPCB against noise and ESD surge is very low. Particularly, there is a problem that the ESD surge affects a ground formed in the electronic circuit board, and the possibility of damaging peripheral electronic parts is high.

Additionally, in the slide type mobile terminal, because a slidably moving upper case is assembled in a half-open state to connect the FPCB to the electronic circuit board, the assembly process is not easy and the FPCB may be broken.

Accordingly, a mobile terminal having a flexible printed circuit board is required for enabling easy assembly of the FPCB in the mobile terminal and improving radiation and ESD ability of the mobile terminal.

SUMMARY OF THE INVENTION

An aspect of the present invention is to address at least the above-mentioned problems and/or disadvantages and to provide at least the advantages described below. Accordingly, an aspect of the present invention is to provide a mobile terminal having a Flexible Printed Circuit Board (FPCB) that enables easy assembly of the FPCB in the mobile terminal and improves radiation and ESD ability of the mobile terminal.

In accordance with an aspect of the present invention, a mobile terminal having a flexible printed circuit board is provided. The mobile terminal includes a first main body unit having a first electronic circuit board mounted therein, a second main body unit movably connected to the first main body unit and having a second electronic circuit board mounted therein, and a Flexible Printed Circuit Board (FPCB) for electrically connecting the first electronic circuit board to the second electronic circuit board so as to transmit an electric signal therebetween. The flexible printed circuit board includes an FPCB connection unit having at least one data line, power line and ground line, a first connector and a second connector formed at opposite ends of the FPCB connection unit and connected to the first electronic circuit board and second electronic circuit board, respectively, and a ground unit formed on the FPCB connection unit between the first connector and second connector and connected to a ground of the first electronic circuit board.

According to another aspect of the present invention, a Flexible Printed Circuit Board (FPCB) installable in a mobile device is provided. The FPCB includes an FPCB connection unit including at least one data line, a power line, and a ground line; a first connector formed at one end of the FPCB connected to a first electronic circuit board of a mobile terminal; a second connector formed at an end of the FPCB opposite that of the end to which the first connector is formed, and connected to a second electronic circuit board of the mobile terminal; and a ground unit formed on the FPCB connection unit between the first connector and the second connector and connected to a ground of the first electronic circuit board.

According to another aspect of the present invention, a method of installing a Flexible Printed Circuit Board (FPCB) in a mobile terminal is provided. The method includes attaching a ground unit of the FPCB to a back surface of an upper cover of a lower case of the mobile terminal, arranging the FPCB such that a first connector of the FPCB protrudes from a side surface of the lower case; installing an electronic circuit board on the upper cover, and connecting the first connector to the electronic circuit board.

Other aspects, advantages, and salient features of the invention will become apparent to those skilled in the art from the following detailed description, which, taken in conjunction with the annexed drawings, discloses exemplary embodiments of the invention.

BRIEF DESCRIPTION OF THE DRAWINGS

The above and other aspects, features, and advantages of certain exemplary embodiments of the present invention will be more apparent from the following description taken in conjunction with the accompanying drawings, in which:

FIG. **1** is a perspective view illustrating a mobile terminal having a flexible printed circuit board according to an exemplary embodiment of the present invention;

FIG. **2** is an exploded perspective view illustrating a configuration of a mobile terminal having a flexible printed circuit board according to another exemplary embodiment of the present invention;

FIG. **3** is a plan view illustrating a configuration of a flexible printed circuit board in the mobile terminal having a flexible printed circuit board of FIG. **2** according to an exemplary embodiment of the present invention;

AliveCor, Inc. Exhibit 1012
IPR2023-00948
Ex. 1012.8

FIG. **4** is a cross sectional view illustrating the flexible printed circuit board of FIG. **3** cut along a line A-A' in FIG. **3** according to an exemplary embodiment of the present invention;

FIG. **5** is a side view illustrating an installed state of the flexible printed circuit board in the mobile terminal having a flexible printed circuit board of FIG. **2** according to an exemplary embodiment of the present invention; and

FIGS. **6**A and **6**B are perspective views illustrating states of assembling the flexible printed circuit board in the mobile terminal having a flexible printed circuit board of FIG. **2** according to an exemplary embodiment of the present invention.

Throughout the drawings, it should be noted that like reference numbers are used to depict the same or similar elements, features, and structures.

DETAILED DESCRIPTION OF EXEMPLARY EMBODIMENTS

The following description with reference to the accompanying drawings is provided to assist in a comprehensive understanding of exemplary embodiments of the invention as defined by the claims and their equivalents. It includes various specific details to assist in that understanding but these are to be regarded as merely exemplary. Accordingly, those of ordinary skill in the art will recognize that various changes and modifications of the embodiments described herein can be made without departing from the scope and spirit of the invention. Also, descriptions of well-known functions and constructions are omitted for clarity and conciseness.

The terms and words used in the following description and claims are not limited to the bibliographical meanings, but are merely used by the inventor to enable a clear and consistent understanding of the invention. Accordingly, it should be apparent to those skilled in the art that the following description of exemplary embodiments of the present invention are provided for illustration purpose only and not for the purpose of limiting the invention as defined by the appended claims and their equivalents.

It is to be understood that the singular forms "a," "an," and "the" include plural referents unless the context clearly dictates otherwise. Thus, for example, reference to "a component surface" includes reference to one or more of such surfaces.

Although a mobile terminal according to an exemplary embodiment of the present invention is described as a mobile communication terminal for convenience of description, exemplary embodiments of the present invention are not limited thereto. A mobile terminal according to an exemplary embodiment of the present invention includes a mobile terminal having a flexible printed circuit board. Exemplary embodiments of the present invention may be applied to any information communication device and multimedia device, such as a mobile communication terminal, mobile phone, Personal Digital Assistant (PDA) terminal, smart phone, International Mobile Telecommunication (IMT) 2000 terminal, Code Division Multiple Access (CDMA) terminal, Wideband Code Division Multiple Access (WCDMA) terminal, Global System for Mobile communication (GSM) terminal, General Packet Radio Service (GPRS) terminal, Enhanced Data GSM Environment (EDGE) terminal, Universal Mobile Telecommunication Service (UMTS) terminal, digital broadcast terminal and ATM (ATM), and the like.

FIG. **1** is a perspective view illustrating a mobile terminal having a flexible printed circuit board according to an exemplary embodiment of the present invention, and FIG. **2** is an exploded perspective view illustrating a configuration of a mobile terminal having a flexible printed circuit board according to another exemplary embodiment of the present invention.

Referring to FIG. **1**, a slide type mobile terminal **1** has an upper case **10**, including a display unit **11** on a front surface thereof, and a lower case **20**, including a key input unit **21** on a front surface thereof. The upper case **10** slidably moves up and down on the lower case **20**.

The display unit **11** displays a user interface that may output a desired screen to a user and receive a command input by the user. A Liquid Crystal Display (LCD) unit and an Organic Light Emitting Diode (OLED) display unit may be used for the display unit **11**.

The key input unit **21** is formed on the front surface of the lower case **20** to receive a manipulation command input by the user, and is exposed when the user slidably moves the upper case **10** on the lower case **20** to expose the front surface of the lower case **20**. The key input unit **21** may be, for example, a key pad or key buttons.

In the exemplary embodiment illustrated in FIG. **1**, an auxiliary key input unit **12** is formed on a lower front surface of the upper case **10** adjacent to a lower side of the display unit **11**, to receive a manipulation command input by the user. The display unit **11** may also be formed on an entire front surface of the upper case **10**. The auxiliary key input unit **12** may be formed on the lower front surface of the upper case **10** or on a side surface thereof, and may include keys usable when the upper case **10** is positioned covering the lower case **20**. Examples of the keys include function keys (such as a power key for turning a power source of the mobile terminal **1** on and off), a call key for call communication with a counterparty, and a directional key for selecting a menu from a menu list displayed on the display unit **11**.

As shown in FIG. **1**, the mobile terminal **1** includes a sound output unit **13** installed on an upper front surface of the upper case **10** for outputting a sound signal, and a sound input unit **22** installed on a lower front surface of the lower case **20** for inputting a sound signal. The user may listen to a sound signal received from a counterparty by moving the sound output unit **13** to the user's ear, and may input a sound signal for transmission to a counterparty by speaking into the sound input unit **22**. The mobile terminal **1** may include a camera unit **14** installed in the upper case **10** for taking a picture of an object and performing video communication. The mobile terminal **1** may include an antenna unit (not shown) in a lower part of the lower case **20** for transmitting and receiving a radio signal.

Referring to FIG. **2**, a sliding hinge **30** is mounted between the upper case **10** and lower case **20** to guide the upper case **10** to slidably move on the lower case **20**. The sliding hinge **30** includes a first sliding member **31** connected to a back surface of the upper case **10**, a second sliding member **32** connected to the front surface of the lower case **20**, and a hinge unit **33** installed between the first sliding member **31** and second sliding member **32**. An opening **34** is formed in the first sliding member **31**. A corresponding opening (not shown) is formed in the second sliding member **32**, to permit a Flexible Printed Circuit Board (FPCB) **100** to penetrate through the first and second sliding members **31** and **32**. A protrusion **31***a* is formed along both sides of the first sliding member **31** in a movement direction of the upper case **10** to guide the sliding movement of the upper case **10**. A corresponding groove **32***b* is formed in both sides of the second sliding member **32** to insert the protrusion **31***a* of the first sliding member **31**. The hinge unit **33** includes an elastic member, such as a compression spring, to provide an elastic force for the upper case **10** to slidably move in an automatic or semi-automatic manner

AliveCor, Inc. Exhibit 1012
IPR2023-00948
Ex. 1012.9

according to its location. FIG. **2** illustrates an example of a configuration of the sliding hinge **30**. Exemplary embodiments of the present invention are not limited to the arrangement shown in FIG. **2**; other arrangements may also be employed.

A first electronic circuit board **23** is installed in the lower case **20**, and a second electronic circuit board **15** (shown in FIG. **5**) is installed in the upper case **10**. Various function modules installed in the upper case **10**, such as the display unit **11** and camera unit **14**, are electrically connected to the second electronic circuit board **15** installed in the upper case **10**, and are controlled via an electrical signal from the first electronic circuit board **23** installed in the lower case **20** through the second electronic circuit board **15**. The first electronic circuit board **23** and second electronic circuit board **15** have a thin plate shape, and may include various electronic parts and circuit lines on a surface thereof to connect the electronic parts. The electronic parts may be various kinds of devices, such as a modem chip. The first electronic circuit board **23** and second electronic circuit board **15** may include a Printed Circuit Board (PCB). Although not shown in the drawings, a noise shielding unit, such as a shield can, may be installed in the first electronic circuit board **23** or second electronic circuit board **15** to shield noise generated by the electronic parts. The noise may be noise generated when data are transmitted from the display unit **11** and camera unit **14**, noise generated by a power source, and noise that is radiated from an antenna unit (not shown) and coupled to the upper case **10**, then radiated therefrom.

As described above, various function modules connected to the second electronic circuit board **15**, such as the display unit **11** and camera unit **14**, are controlled by receiving an electrical signal from the first electronic circuit board **23**. The FPCB **100** connects the first electronic circuit board **23** with the second electronic circuit board **15** to transmit various electrical signals therebetween. The flexible printed circuit board **100** according to an exemplary embodiment of the present invention is described with reference to FIGS. **3** to **5**.

FIG. **3** is a plan view illustrating a configuration of the flexible printed circuit board **100**, FIG. **4** is a cross sectional view illustrating the flexible printed circuit board **100** cut along a line A-A' in FIG. **3**, and FIG. **5** is a side view illustrating an installed state of the flexible printed circuit board **100** in the mobile terminal **1**, according to an exemplary embodiment of the present invention.

Referring to FIGS. **3** and **4**, the flexible printed circuit board **100** includes an FPCB connection unit **110**, first connector **120**, second connector **130** and ground unit **140**. FIG. **4** shows a section cut along the line A-A' in FIG. **3**.

The FPCB connection unit **110** forms the body of the FPCB **100**, and is formed of a flexible printed circuit in which micro circuits are printed on a thin film of a flexible plastic material. The FPCB connection unit **110** may include a plurality of data lines, power lines, and ground lines (not shown), and may have a plurality of layers. The FPCB connection unit **110** connects the first electronic circuit board **23** and second electronic circuit board **15** and operates as a communication path for transmitting various control signals and data signals between the first electronic circuit board **23** and the second electronic circuit board **15**. The data line, power line, and ground line of the FPCB connection unit **110** may be made of a copper conductor. Opposite ends of the ground line of the FPCB connection unit **110** may be connected to a ground of the first electronic circuit board **23** and a ground of the second electronic circuit board **15**. Because the FPCB connection unit **110** may be variously embodied according to conditions under which it is used, and a configuration of the FPCB connection **110** is well-known, detailed description thereof is omitted here.

The first connector **120** and second connector **130** are formed at opposite ends of the FPCB connection unit **110**, and are connected to the first electronic circuit board **23** and second electronic circuit board **15**, respectively. Although not shown in the drawings, the first connector **120** and second connector **130** may each include a header and socket including a plurality of terminals. Electromagnetic Interference (EMI) shielding paint may be applied on the first connector **120** and second connector **130** to reduce the influence of static electricity when coupled to the first electronic circuit board **23** and second electronic circuit board **15**.

Referring to FIG. **4**, the ground unit **140** is formed on the FPCB connection unit **110** between the first connector **120** and second connector **130** and is connected to the ground (not shown) of the first electronic circuit board **23**. The ground unit **140** includes an upper ground layer **141** and a lower ground layer **142** that are formed of a thin copper coating layer on the front surface and back surface of the FPCB connection unit **110**, respectively. Additionally, the upper ground layer **141**, the ground line of the FPCB connection unit **110**, and the lower ground layer **142** are connected through a plurality of via holes **143**. The plurality of via holes **143** are formed to penetrate the ground line of the FPCB connection unit **110**, the upper ground layer **141**, and the lower ground layer **142**. The upper ground layer **141**, the ground line of the FPCB connection unit **110**, and the lower ground layer **142** are electrically connected by a metallic filling material filled therein. Accordingly, noise and ESD surges transmitted through the FPCB **100** may be passed to the ground of the first electronic circuit board **23**. A configuration and arrangement of the plurality of via holes **143** is shown in FIG. **3** as an example, however other configurations may also be employed.

As described above, a ground between the first electronic circuit board **23** and the second electronic circuit board **15** may be secured sufficiently by forming the ground unit **140** on the FPCB connection unit **110**. Additionally, because the noise and ESD surges transmitted through the FPCB **100** may be passed to the ground of the first electronic circuit board **23** through the ground unit **140**, influence of the noise and ESD surges to electronic parts installed on the first electronic circuit board **23** may be reduced, thereby enabling improvement of radiation and ESD ability of the mobile terminal **1**.

Referring to FIG. **5**, the ground unit **140** is installed between the first electronic circuit board **23** and an upper cover **20***a* of the lower case **20**, and is attached to a back surface of the upper cover **20***a*. When the ground unit **140** is attached to the back surface of the upper cover **20***a*, the ground unit **140** contacts a ground formed on a surface of the first electronic circuit board **23**. The ground unit **140** may be attached to the back surface of the upper cover **20***a* of the lower case **20** using a conductive tape **140***a*.

As shown in FIG. **3**, the FPCB connection unit **110** includes the ground unit **140**, the first connection unit **110***a* between the first connector **120** and ground unit **140**, and the second connection unit **110***b* between the second connector **130** and ground unit **140**. The first connection unit **110***a* is formed such that, when the ground unit **140** is attached to the back surface of the upper cover **20***a* of the lower case **20**, the first connector **120** protrudes from a side surface of the lower case **20**. Because of the above configuration, after the ground unit **140** of the FPCB **100** is attached to the back surface of the upper cover **20***a* of the lower case **20** and the first electronic circuit board **23** is thereby attached to the upper cover **20***a* of

the lower case **20**, the first connector **120** may subsequently be connected to the first electronic circuit board **23**. The first connector **120** may be connected to the first electronic circuit board **23** through a connection unit **23***a* installed on a side of the first electronic circuit board **23** opposite to the side contacted by the ground unit **140**. As described above, after the first connection unit **110***a* of the FPCB connection unit **110** is formed for the first connector **120** to protrude from a side surface of the lower case **20** and the first electronic circuit board **23** is installed on the upper cover **20***a* of the lower case **20**, the first connector **120** is then connected to the first electronic circuit board **23**. This arrangement allows for easy assembly of the FPCB **100** regardless of a location of the upper case **10** due to sliding movement. Further, damage to the FPCB **100** such as breakage may be prevented when installed on the mobile terminal **1**, and manufacturing time for the mobile terminal **1** may be reduced. This is described in detail later with reference to FIGS. **6***a* and **6***b*.

As shown in FIG. **3**, the first connection unit **110***a* may be formed perpendicular to the second connection unit **110***b*. In this case, when the FPCB **100** is installed in the mobile terminal **1** and connects to the first electronic circuit board **23** and second electronic circuit board **15**, the ground unit **140** is installed on the upper cover **20***a* of the lower case **20**, the first connection unit **110***a* is arranged in a widthwise direction of the mobile terminal **1**, and the second connection unit **110***b* is arranged in a lengthwise direction of the mobile terminal **1**. Accordingly, when the ground unit **140** is attached to the back surface of the upper cover **20***a* of the lower case **20**, the first connector **120** may protrude from the side surface of the lower case **20**.

FIG. **3** shows an example in which the first connection unit **110***a* of the FPCB connection unit **110** is perpendicular to second connection unit **110***b* thereof. However, the first connection unit **110***a* may be formed in a linear orientation with the second connection unit **110***b*. For example, if an antenna unit (not shown) of the mobile terminal **1** is installed in a location other than a lower part of the lower case **20** and space in the lower case **20** is available, the second connection unit **110***b* may be formed such that the second connector **130** protrudes from the lower part of the mobile terminal **1**. As described above, the configuration of the FPCB connection unit **110** may be changed depending on conditions including a size and location of an installed electronic circuit board, and a location of installed electronic parts such as an antenna unit.

A process of assembling the FPCB **100** in the mobile terminal **1** is described hereinafter with respect to FIGS. **6**A and **6**B.

FIGS. **6**A and **6**B are perspective views illustrating states of assembling the flexible printed circuit board **100** in the mobile terminal **1** according to an exemplary embodiment of the present invention.

Referring to FIGS. **6**A and **6**B, the display unit **11** of the mobile terminal **1** is shown facing downwards and the lower cover **20***b* of the lower case **20** is removed for convenience of description. Although not shown in the drawings, the second connector **130** of the FPCB **100** is connected to the second electronic circuit board **15** installed in the upper case **10**. The second connection unit **110***b* penetrates through an opening formed in the sliding hinge **30** and through a corresponding opening formed in the upper cover **20***a* of the lower case **20**. The ground unit **140** is located at the back surface of the upper cover **20***a* of the lower case **20**. As shown in FIG. **5**, a surface of the ground unit **140** is attached on the back surface of the upper cover **20***a* of the lower case **20** by the conductive tape **140***a*. As shown in FIG. **6**B, the FPCB **100** is attached on the back surface of the upper cover **20***a* of the lower case **20**, and the first electronic circuit board **23** may be attached to the upper cover **20***a* of the lower case **20**. The ground unit **140** of the FPCB **100** contacts a ground formed on a surface of the first electronic circuit board **23**, and the first connector **120** protrudes through a side surface of the lower case **20**. The first connector **120** is connected to the connection unit **23***a* installed on the side of the first electronic circuit board **23** opposite to the side contacted by the ground unit **140**.

As described above, in the mobile terminal **1** having the flexible printed circuit board **100** according to an exemplary embodiment of the present invention, a ground between the first electronic circuit board **23** and second electronic circuit board **15** may be secured sufficiently by forming the ground unit **140** in the FPCB connection unit **110**. Additionally, because noise and ESD surges transmitted through the FPCB **100** may be passed through the ground unit **140** to the ground of the first electronic circuit board **23**, influence of the noise and ESD surges to electronic parts installed on the first electronic circuit board **23** may be reduced, and radiation and ESD ability of the mobile terminal **1** may be improved. Additionally, by connecting the first connector **120** to the first electronic circuit board **23** after the first connection unit **110***a* of the FPCB connection unit **110** is formed for the first connector **120** to protrude from a side surface of the lower case **20** and the first electronic circuit board **23** is installed on the upper cover **20***a* of the lower case **20**, the FPCB **100** may be easily assembled irrespective of a location of the upper case **10** due to sliding movement, damage to the FPCB **100** such as breakage may be prevented when installed on the mobile terminal **1**, and manufacturing time for the mobile terminal **1** may be reduced.

Exemplary embodiments of the present invention have been described above using the mobile terminal **1** of a slide type. However, the mobile terminal according to exemplary embodiments of the present invention is not limited thereto. Exemplary embodiments of the present invention may be applied to various mobile terminals using the FPCB to connect the first electronic circuit board and second electronic circuit board, such as a slide type mobile terminal, folder type mobile terminal, rotating type mobile terminal, and a combination thereof.

While the invention has been shown and described with reference to certain exemplary embodiments thereof, it will be understood by those skilled in the art that various changes in form and details may be made therein without departing from the spirit and scope of the invention as defined in the appended claims and their equivalents.

What is claimed is:

1. A Flexible Printed Circuit Board (FPCB) installable in an electronic device, the FPCB comprising:

an L-shape FPCB connection unit including at least one data line, a power line, and a ground line;

a first connector formed at one end of the L-shape FPCB connection unit and connected to a first electronic circuit board of the electronic device;

a second connector formed at an end of the L-shape FPCB connection unit opposite that of the end to which the first connector is formed, and connected to a second electronic circuit board of the electronic device; and

a ground unit formed on the L-shape FPCB connection unit between the first connector and the second connector and connected to a ground of the first electronic circuit board,

wherein the ground unit comprises an upper ground layer and a lower ground layer on a front surface and a back

surface of the FPCB connection unit, respectively, and is connected to the ground of the first electronic circuit board.

2. The FPCB of claim **1**, wherein the upper ground layer, a ground line of the FPCB connection unit, and the lower ground layer are electrically connected through at least one via hole by a metallic filling material, wherein a surge transmitted through the FPCB can be passed to the ground of the first electronic circuit board.

3. The FPCB of claim **1**, wherein the ground unit is attached to the back surface of the upper cover of the main body unit by a conductive tape.

4. The FPCB of claim **1**, wherein the L-shape FPCB connection unit comprises a first connection unit between the first connector and the ground unit, formed such that the first connector protrudes from a side surface of the first electronic circuit board when the ground unit is attached to the back surface of the upper cover of the main body unit.

5. The FPCB of claim **4**, wherein the first connector is installed on a side of the first electronic circuit board opposite to a side of the first electronic circuit board contacted by the ground unit.

6. The FPCB of claim **5**, wherein the first connection unit of the L-shape FPCB connection unit is formed perpendicular to a second connection unit of the L-shape FPCB connection unit formed between the second connector and the ground unit.

7. The FPCB of claim **1**, wherein the ground unit is located between an upper cover of a main body unit of the electronic device and the first electronic circuit board and attached to a back surface of an upper cover of the electronic device.

8. A method of installing a Flexible Printed Circuit Board (FPCB) in an electronic device, the method comprising:

attaching a ground unit of a L-shape FPCB to a back surface of an upper cover of a main body unit of the electronic device, wherein the ground unit comprises an upper ground layer and a lower ground layer on a front surface and a back surface of the FPCB connection unit, respectively;

arranging the L-shape FPCB such that a first connector of the L-shape FPCB protrudes from a side surface of the main body unit;

installing an electronic circuit board on the upper cover; and

connecting the first connector to the electronic circuit board,

wherein the installing of the electronic circuit board comprises attaching a ground of the electronic circuit board to the ground unit.

* * * * *