US009973840B2

(12) **United States Patent**
Wagman et al.

(10) **Patent No.: US 9,973,840 B2**
(45) **Date of Patent: May 15, 2018**

(54) **WATERPROOF RECEPTACLE CONNECTOR**

(71) Applicant: **Apple Inc.**, Cupertino, CA (US)

(72) Inventors: **Daniel C. Wagman**, Scotts Valley, CA (US); **Darshan R. Kasar**, San Francisco, CA (US); **Lee M. Panecki**, San Francisco, CA (US)

(73) Assignee: **Apple Inc.**, Cupertino, CA (US)

(*) Notice: Subject to any disclaimer, the term of this patent is extended or adjusted under 35 U.S.C. 154(b) by 0 days. days.

(21) Appl. No.: **15/273,694**

(22) Filed: **Sep. 22, 2016**

(65) **Prior Publication Data**

US 2017/0093079 A1 Mar. 30, 2017

Related U.S. Application Data

(60) Provisional application No. 62/235,205, filed on Sep. 30, 2015, provisional application No. 62/235,213,
(Continued)

(51) **Int. Cl.**
H04R 1/10 (2006.01)
H04R 1/28 (2006.01)
(Continued)

(52) **U.S. Cl.**
CPC ***H04R 1/1041*** (2013.01); ***A45C 11/00*** (2013.01); ***A45C 11/24*** (2013.01); ***A45C 13/02*** (2013.01); ***A45C 13/1069*** (2013.01); ***B65D 25/02*** (2013.01); ***B65D 43/16*** (2013.01); ***H01R 13/521*** (2013.01); ***H02J 7/0044*** (2013.01); ***H02J 7/0047*** (2013.01); ***H02J 7/025*** (2013.01); ***H04B 1/3888*** (2013.01); ***H04B 5/0037*** (2013.01); ***H04R 1/02*** (2013.01); ***H04R 1/1016*** (2013.01); ***H04R 1/1025*** (2013.01); ***H04R 1/1058*** (2013.01); ***H04R 1/1075*** (2013.01);
(Continued)

(58) **Field of Classification Search**
CPC .. H01R 13/521; H01R 12/88; H01R 13/5213; H01R 13/6205; H01R 2107/00; H01R 24/76
See application file for complete search history.

(56) **References Cited**

U.S. PATENT DOCUMENTS

3,297,933 A 1/1967 McCarthy
3,892,638 A 7/1975 Stevens et al.
(Continued)

FOREIGN PATENT DOCUMENTS

CN 1706171 12/2005
CN 101641969 2/2010
(Continued)

OTHER PUBLICATIONS

US 9,794,673, 10/2017, Chawan et al. (withdrawn)
(Continued)

Primary Examiner — Truc Nguyen
(74) *Attorney, Agent, or Firm* — Kilpatrick Townsend and Stockton, LLP

(57) **ABSTRACT**

An electrical receptacle connector includes housing defining a cavity configured to receive a plug portion of a mating connector. A plurality of electrical contacts are secured within a contact assembly that is sealed to the housing with a gasket and held in place by a metallic bracket disposed around an outside surface of the housing.

15 Claims, 33 Drawing Sheets

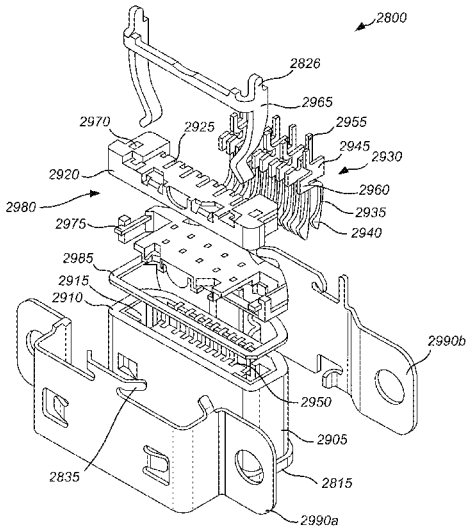

Related U.S. Application Data

filed on Sep. 30, 2015, provisional application No. 62/235,219, filed on Sep. 30, 2015, provisional application No. 62/235,226, filed on Sep. 30, 2015, provisional application No. 62/384,114, filed on Sep. 6, 2016.

(51) **Int. Cl.**

H04R 1/34	(2006.01)
B65D 25/02	(2006.01)
B65D 43/16	(2006.01)
H04R 1/02	(2006.01)
H04B 1/3888	(2015.01)
H04B 5/00	(2006.01)
A45C 11/24	(2006.01)
A45C 13/10	(2006.01)
H04R 9/02	(2006.01)
H04R 9/06	(2006.01)
H02J 7/00	(2006.01)
H02J 7/02	(2016.01)
H01R 13/52	(2006.01)
A45C 11/00	(2006.01)
H04R 5/033	(2006.01)
A45C 13/02	(2006.01)
H04B 1/3827	(2015.01)
H04M 1/60	(2006.01)
F16B 1/00	(2006.01)

(52) **U.S. Cl.**

CPC ***H04R 1/2826*** (2013.01); ***H04R 1/345*** (2013.01); ***H04R 5/033*** (2013.01); ***H04R 9/025*** (2013.01); ***H04R 9/06*** (2013.01); *A45C 2011/001* (2013.01); *A45C 2013/026* (2013.01); *F16B 2001/0035* (2013.01); *H02J 2007/0096* (2013.01); *H04B 1/385* (2013.01); *H04M 1/6033* (2013.01); *H04R 1/2857* (2013.01); *H04R 2420/07* (2013.01); *H04R 2460/03* (2013.01); *H04R 2460/09* (2013.01); *H04R 2460/17* (2013.01)

(56) **References Cited**

U.S. PATENT DOCUMENTS

4,379,988	A	4/1983	Mattatall et al.	
4,521,919	A	6/1985	Molloy	
5,135,012	A	8/1992	Kamen et al.	
5,253,300	A	10/1993	Knapp	
5,610,494	A	3/1997	Grosfilley	
6,190,203	B1 *	2/2001	Murakami	H01R 13/5219 439/274
6,193,833	B1	2/2001	Gizowski et al.	
6,310,960	B1	10/2001	Passerini et al.	
6,465,757	B1	10/2002	Chen	
6,519,448	B1	2/2003	Dress et al.	
6,658,124	B1	12/2003	Meadows	
6,751,327	B1	6/2004	Urso et al.	
7,062,057	B2	6/2006	Wu	
D529,288	S	10/2006	Ham	
7,775,675	B2	8/2010	Hamm et al.	
7,922,535	B1 *	4/2011	Jiang	H01R 13/5205 439/271
8,009,001	B1	8/2011	Cleveland et al.	
8,009,002	B2	8/2011	Fiedler	
8,027,497	B2	9/2011	Klemenz et al.	
8,078,787	B2	12/2011	Lydon et al.	
8,126,177	B2	2/2012	Jensen et al.	
8,170,623	B2	5/2012	Dorogusker et al.	
8,180,093	B2	5/2012	Hankey et al.	
8,181,233	B2	5/2012	Wyld	
8,185,084	B2	5/2012	Terlizzi	
8,311,255	B2	11/2012	Hankey et al.	
8,401,219	B2	3/2013	Hankey et al.	
8,437,813	B2	5/2013	Griffin et al.	
8,485,404	B2	7/2013	Santo et al.	
8,538,050	B2	9/2013	Fink et al.	
8,650,925	B2	2/2014	Hankey et al.	
8,701,912	B2	4/2014	Carnevali et al.	
8,712,071	B2	4/2014	Terlizzi et al.	
8,867,758	B2	10/2014	Terlizzi et al.	
8,873,790	B2	10/2014	Hayashida et al.	
8,891,800	B1	11/2014	Shaffer	
8,965,030	B2	2/2015	Aase	
9,014,405	B2	4/2015	Rank et al.	
9,118,990	B2	8/2015	Hankey et al.	
9,148,717	B2	9/2015	Shaffer	
9,210,498	B1	12/2015	Shaffer	
9,258,663	B2	2/2016	Aase et al.	
9,287,657	B2	3/2016	Hankey et al.	
9,294,830	B2	3/2016	Terlizzi	
9,319,815	B2	4/2016	Warren et al.	
9,402,120	B2	7/2016	Lindén et al.	
9,509,358	B1	11/2016	Shaffer et al.	
9,559,548	B2	1/2017	Kwon et al.	
9,608,359	B2 *	3/2017	Arai	H01R 12/716
9,769,558	B2	9/2017	Chandramohan et al.	
2002/0089307	A1	7/2002	Yang	
2002/0131609	A1	9/2002	Kobayashi et al.	
2002/0147026	A1	10/2002	Hsieh	
2003/0165250	A1	9/2003	Garber et al.	
2004/0112519	A1	6/2004	Mori	
2005/0175491	A1	8/2005	Ponziani et al.	
2005/0212479	A1	9/2005	Tsunoda et al.	
2005/0227635	A1	10/2005	Hawkins et al.	
2007/0032274	A1	2/2007	Lee et al.	
2007/0067954	A1	3/2007	Finney et al.	
2007/0104343	A1	5/2007	Bengtsson et al.	
2007/0194633	A1	8/2007	Ueda et al.	
2007/0195978	A1	8/2007	Fink et al.	
2007/0254696	A1	11/2007	Kajitani et al.	
2007/0256946	A1	11/2007	Godshaw et al.	
2007/0263893	A1	11/2007	Kim	
2008/0090622	A1	4/2008	Kim et al.	
2008/0090626	A1	4/2008	Griffin et al.	
2008/0136369	A1	6/2008	Klemenz et al.	
2008/0164934	A1	7/2008	Hankey et al.	
2008/0166006	A1	7/2008	Hankey et al.	
2008/0166968	A1	7/2008	Tang et al.	
2008/0180874	A1	7/2008	Gauger et al.	
2008/0186683	A1	8/2008	Ligtenberg et al.	
2008/0240480	A1	10/2008	Pinnell et al.	
2008/0240486	A1	10/2008	Garcia et al.	
2008/0278269	A1	11/2008	Ramirez et al.	
2008/0292123	A1	11/2008	Jensen	
2008/0320190	A1	12/2008	Lydon et al.	
2009/0067652	A1	3/2009	Schmidt et al.	
2009/0071502	A1	3/2009	Drugeon	
2009/0108801	A1	4/2009	Kozisek	
2009/0141918	A1	6/2009	Chris et al.	
2009/0176391	A1	7/2009	Brock et al.	
2009/0233652	A1	9/2009	Yang	
2009/0296968	A1	12/2009	Wu et al.	
2009/0326689	A1	12/2009	Allard et al.	
2010/0056272	A1	3/2010	Dutilly et al.	
2010/0116703	A1	5/2010	Elenes et al.	
2010/0171578	A1	7/2010	Fiedler	
2010/0210326	A1	8/2010	Ladouceur et al.	
2010/0320961	A1	12/2010	Castillo et al.	
2011/0159934	A1	6/2011	Yu et al.	
2011/0182458	A1	7/2011	Rosener et al.	
2011/0188689	A1	8/2011	Beck et al.	
2011/0218502	A1	9/2011	Iio et al.	
2011/0284783	A1	11/2011	Haynes et al.	
2011/0286615	A1	11/2011	Olodort et al.	
2012/0074006	A1	3/2012	Monaco et al.	
2012/0077377	A1 *	3/2012	Han	B29C 45/2628 439/587
2012/0114902	A1	5/2012	Furuyama et al.	
2012/0140963	A1	6/2012	Larsen et al.	
2012/0237074	A1	9/2012	Aase et al.	

(56) **References Cited**

U.S. PATENT DOCUMENTS

2012/0243691 A1 9/2012 Lin
2012/0289090 A1* 11/2012 Oiri H01R 13/4223 439/625
2013/0063873 A1 3/2013 Wodrich et al.
2013/0148839 A1 6/2013 Stevinson
2013/0149990 A1 6/2013 Otto et al.
2013/0165046 A1 6/2013 Tang et al.
2013/0183844 A1* 7/2013 Wang H01R 24/68 439/271
2013/0206612 A1 8/2013 Chun et al.
2013/0222323 A1 8/2013 McKenzie
2013/0233762 A1 9/2013 Balaji et al.
2013/0238829 A1 9/2013 Laycock et al.
2013/0252552 A1 9/2013 Vitkus et al.
2013/0260615 A1* 10/2013 Jol H01R 24/62 439/676
2013/0265702 A1 10/2013 Merenda et al.
2013/0315431 A1 11/2013 Grinker et al.
2013/0329359 A1 12/2013 Andre et al.
2013/0343593 A1 12/2013 Howes et al.
2013/0343595 A1 12/2013 Zorkendorfer et al.
2014/0034080 A1 2/2014 Paquet et al.
2014/0068944 A1 3/2014 Aase et al.
2014/0073190 A1* 3/2014 Zhao H01R 13/6594 439/626
2014/0120983 A1 5/2014 Lam et al.
2014/0138378 A1 5/2014 Lequeux et al.
2014/0153767 A1 6/2014 Hua
2014/0166658 A1 6/2014 Hamra et al.
2014/0233783 A1 8/2014 Chardon et al.
2014/0264075 A1 9/2014 LaPorte et al.
2014/0341399 A1 11/2014 Dusse et al.
2014/0376763 A1 12/2014 Stevinson
2015/0029112 A1 1/2015 Macours
2015/0055813 A1 2/2015 Ingraham
2015/0155661 A1* 6/2015 Chen H01R 13/6582 439/607.01
2015/0163582 A1 6/2015 Aase
2015/0200558 A1 7/2015 Castillo et al.
2015/0207907 A1 7/2015 Eisele et al.
2015/0208179 A1 7/2015 Chang et al.
2015/0241195 A1 8/2015 Schenkewitz et al.
2015/0245125 A1 8/2015 Shaffer
2015/0245126 A1 8/2015 Shaffer
2015/0245127 A1 8/2015 Shaffer
2015/0245723 A1 9/2015 Alexander
2015/0255905 A1* 9/2015 Little H01R 13/6658 439/78
2015/0256021 A1 9/2015 Jang et al.
2015/0307273 A1 10/2015 Lyman
2015/0317008 A1 11/2015 Chandran et al.
2015/0351271 A1 12/2015 Dawson
2015/0364845 A1* 12/2015 Yu H01R 12/724 439/271
2015/0373448 A1 12/2015 Shaffer
2016/0006292 A1 1/2016 Hatanaka et al.
2016/0043518 A1* 2/2016 Lin H01R 13/193 439/676
2016/0055632 A1 2/2016 Fu et al.
2016/0073189 A1 3/2016 Linden et al.
2016/0093974 A1* 3/2016 Lai H01R 13/5202 439/736
2016/0134959 A1 5/2016 Shaffer
2016/0134961 A1 5/2016 Shaffer
2016/0142807 A1 5/2016 Aase
2016/0192055 A1 6/2016 Liu et al.
2016/0219358 A1 7/2016 Shaffer et al.
2016/0234356 A1 8/2016 Thomas et al.
2016/0268722 A1* 9/2016 Tsai H01R 13/5202
2016/0277053 A1 9/2016 Wong Chee
2016/0282899 A1 9/2016 Inagaki et al.
2016/0357510 A1 12/2016 Watson et al.
2016/0360350 A1 12/2016 Watson et al.
2017/0013342 A1 1/2017 Watson et al.
2017/0013875 A1 1/2017 Peart et al.
2017/0048604 A1 2/2017 Hankey et al.
2017/0093079 A1 3/2017 Wagman et al.
2017/0093453 A1 3/2017 Panecki et al.
2017/0093454 A1 3/2017 Chawan et al.
2017/0094381 A1 3/2017 Leblanc et al.
2017/0094390 A1 3/2017 Chawan et al.
2017/0094391 A1 3/2017 Panecki et al.
2017/0094392 A1 3/2017 Zörkendörfer et al.
2017/0094393 A1 3/2017 Panecki et al.
2017/0094394 A1 3/2017 Mcpeak et al.
2017/0094395 A1 3/2017 Mcpeak et al.
2017/0094396 A1 3/2017 Chandramohan et al.
2017/0094397 A1 3/2017 Wagman et al.
2017/0094398 A1 3/2017 Cousins et al.
2017/0094399 A1 3/2017 Chandramohan
2017/0154421 A1 6/2017 Fu et al.
2017/0238087 A1 8/2017 Chawan et al.
2017/0245038 A1 8/2017 Chawan et al.
2017/0347182 A1 11/2017 Chawan et al.

FOREIGN PATENT DOCUMENTS

CN 102474695 5/2012
CN 102612464 7/2012
CN 102761344 10/2012
CN 103078365 5/2013
CN 202997644 6/2013
CN 103429032 12/2013
CN 103429032 A 12/2013
CN 103517173 1/2014
CN 204090096 1/2015
CN 104378709 2/2015
CN 204243795 4/2015
CN 2040900096 7/2015
CN 106551494 4/2017
CN 106559719 4/2017
CN 106559720 4/2017
CN 106559721 4/2017
CN 106560113 4/2017
CN 106560114 4/2017
CN 106617580 5/2017
CN 206150698 5/2017
CN 206314705 7/2017
CN 206314706 7/2017
CN 206314707 7/2017
CN 206354604 7/2017
CN 206603376 11/2017
CN 206620243 11/2017
CN 206949751 2/2018
DE 102009033898 B3 11/2010
DK 201770337 5/2017
DK 201770347 5/2017
DK 201770348 5/2017
DK 201770349 5/2017
DK 201770350 5/2017
DK 201770351 5/2017
DK 201770352 5/2017
EP 1427648 7/2006
EP 2098948 9/2009
EP 2441625 4/2012
EP 2469303 A1 6/2012
EP 1346483 B1 8/2013
EP 2665023 A1 11/2013
EP 2677767 12/2013
EP 2876777 5/2015
EP 2876777 A1 5/2015
EP 3054703 A1 8/2016
EP 3101867 A1 12/2016
EP 3151583 4/2017
EP 3151584 4/2017
EP 3157265 4/2017
GB 2445388 A 7/2008
HK 1234970 3/2018
HK 1235196 3/2018
JP 60070285 4/1985
JP 60237729 11/1985
JP 2005512858 5/2005
JP 2006504304 2/2006

(56) **References Cited**

FOREIGN PATENT DOCUMENTS

JP	3143722		7/2008
JP	2010534978		11/2010
JP	2011016352		1/2011
JP	2012019495		1/2012
JP	2012100248		5/2012
JP	2012100248	A	5/2012
JP	2014014074		1/2014
JP	3192908		8/2014
JP	2015109542		6/2015
JP	2015109785		6/2015
JP	6165951		6/2017
JP	2017098943		6/2017
JP	2017099259		6/2017
JP	2017108606		6/2017
JP	2017112595		6/2017
KR	1020140044516		4/2014
KR	101494199		2/2015
KR	10200477291		5/2015
KR	101829140		2/2018
KR	101830397		2/2018
TW	579633		3/2004
TW	M404402		5/2011
TW	201440536		10/2014
TW	201720332		6/2017
TW	201722169		6/2017
TW	201724873		7/2017
TW	201728097		8/2017
WO	2004007180		1/2004
WO	2006070066		7/2006
WO	2007101439		9/2007
WO	2008118478	A1	10/2008
WO	2009158635	A2	12/2009
WO	2011018086		2/2011
WO	2011018086	A1	2/2011
WO	2012022021	A1	2/2012
WO	2014155367	A1	10/2014
WO	2014209374	A1	12/2014
WO	2015-050073	A1	4/2015
WO	2015050073		4/2015
WO	2015057052		4/2015
WO	2015126572	A1	8/2015
WO	2017058675		4/2017

OTHER PUBLICATIONS

US 9,826,301, 11/2017, Chawan et al. (withdrawn)

Bestsound Technology, "How Charge Siemens Hearing Aids with eCharger", YouTube Internet Citation, XP-002767611, dated Feb. 13, 2015, printed from https//www.youtube.com/watch=Y6M7SpziA (BNSDOCID:<XP_2767611A_1_> in 1 page.

CN201621078698.X, "First Notification to Make Rectification", dated Mar. 15, 2017, 3 pages.

CN201621078698.X, "Office Action", dated Mar. 15, 2017, 3 pages.

EP16190175.6, "Extended European Search Report", dated Mar. 15, 2017, 12 pages.

EP16190180.6, "Extended Search Report", dated Mar. 15, 2017, 11 pages.

EP16190189.7, "Partial Search Report", dated Mar. 16, 2017, 9 pages.

EP16190200.2, "Extended Search Report", dated Mar. 7, 2017, 13 pages.

EP16190259.8, "Extended Search Report", dated Mar. 15, 2017, 11 pages.

Siemens AG, "Siemens Accessories for Hearing Instruments: Designed to File Your Lifestyle", available at: https://media.sivantos.com/siemens-website/media/2014/05/Accessories_consumer-leaflet_2013-09_en.pdf, Sep. 10, 2013, 8 pages.

First Action Interview Pilot Program Pre-Interview Communication in U.S. Appl. No. 15/273,675, dated Jun. 2, 2017, in 4 pages.

First Action Interview Pilot Program Pre-Interview Communication in U.S. Appl. No. 15/273,693, dated Apr. 18, 2017, in 4 pages.

Notice of Allowance in U.S. Appl. No. 15/273,693, dated May 23, 2017, in 9 pages.

Non-Final Office Action issued in U.S. Appl. No. 15/273,694, dated May 15, 2017 in 8 pages.

Notice of Allowance in U.S. Appl. No. 15/275,364, dated Apr. 3, 2017, in 18 pages.

Supplemental Notice of Allowance in U.S. Appl. No. 15/275,364, dated Apr. 19, 2017, in 2 pages.

Supplemental Notice of Allowance in U.S. Appl. No. 15/275,364, dated Jun. 21, 2017, in 6 pages.

Notice of Allowance in U.S. Appl. No. 15/275,366, dated Jun. 7, 2017, in 19 pages.

First Examination Report for Australia Application No. AU2016231632, dated Jun. 2, 2017 in 7 pages.

Office Action in China Application No. CN201621078698.X, dated Mar. 15, 2017, in 3 pages.

Avery Hartmans, article entitled "These beautiful wireless earbuds are a worthy alternative to Apple's AirPods", Skybuds wireless earbuds, from Alpha Audiotronics: Review, Photos—Business Insider, dated Mar. 9, 2017 in 11 pages. Printed from http://www.businessinsider.com/skybuds-wir eless-earbuds-alpha-audiotronic,s-review-phot, Mar. 14, 2017.

Notice of Allowance in Japanese Application No. JP2016-186287, dated May 22, 2017, in 4 pages.

Office Action in Korean Application No. KR10-2016-0122237, dated May 22, 2017, in 13 pages.

Office Action in Korean Application No. KR10-2016-0122269, dated May 22, 2017, 11 pages.

International Search Report and Written Opinion in PCT Application No. PCT/US2016/053580, dated Apr. 5, 2017, 26 pages.

Office Action in Taiwan Application No. TW105130923, dated May 9, 2017, in 6 pages.

First Action Interview Pilot Program Pre-Interview Communication in U.S. Appl. No. 15/273,677, dated Jul. 12, 2017, in 4 pages.

First Action Interview Pilot Program Pre-Interview Communication, in U.S. Appl. No. 15/588,400, dated Jul. 20, 2017, in 5 pages.

First Action Interview Pilot Program Pre-Interview Communication, in U.S. Appl. No. 15/588,444, dated Jul. 12, 2017, in 6 pages.

First Examination Report for Australia Application No. AU2016231631, dated Jun. 14, 2017, 2 pages.

Office Action for China Application No. CN201621078698.X, dated Jul. 11, 2017, 4 pages.

Notice of Decision to Grant for China Application No. CN201621079342.8, dated Jun. 26, 2017.

Office Action for Danish Application No. DKPA 2017 70347, dated Jul. 11, 2017 in 10 pages.

Office Action for Danish Application No. DKPA 2017 70350, dated Aug. 3, 2017 in 10 pages.

Extended European Search Report for European Application No. EP16190189.7, dated Jun. 21, 2017 in 13 pages.

Extended European Search Report for European Application No. EP16190209.3, dated Jul. 6, 2017 in 11 pages.

Extended European Search Report for European Application No. EP16190260.6, dated Jul. 6, 2017 in 10 pages.

Youtube Video: How to charge Siemens hearing aids with eCharger, Siemens, by BestSound Technology, Published on Feb. 13, 2015 and printed from https://www.youtube.com/watch?v=-Y6ZM7SpziA.

Final Office Action in U.S. Appl. No. 15/273,675 , dated Aug. 31, 2017 in 20 pages.

First Action Interview Pilot Program Pre-Interview Communication, in U.S. Appl. No. 15/273,685, dated Aug. 31, 2017 in 4 pages.

First Examination Report for Australia Application No. AU2016231629, dated Aug. 17, 2017 in 4 pages.

First Examination Report for Australia Application No. AU2016231633, dated Aug. 18, 2017 in 5 pages.

Notice of Decision to Grant for China Application No. CN201621079333.9, dated Aug. 22, 2017 in 2 pages.

Notice of Decision to Grant for China Application No. CN201621079467.0, dated Aug. 16, 2017.

Office Action for Danish Application No. DKPA 2017 70337, dated Aug. 31, 2017 in 8 pages.

(56) **References Cited**

OTHER PUBLICATIONS

Office Action for Danish Application No. DKPA 2017 70348, dated Aug. 25, 2017 in 8 pages.
Office Action for Danish Application No. DKPA 2017 70349, dated Sep. 12, 2017 in 8 pages.
Office Action for Danish Application No. DKPA 2017 70351, dated Sep. 12, 2017 in 11 pages.
Office Action for Korean Application No. KR10-2016-0122143, dated Aug. 30, 2017 in 5 pages.
Notice of Decision to Grant in China Application No. CN201621078698.X, dated Sep. 19, 2017 in 2 pages.
Office Action in China Application No. CN201621078698.X, dated Jul. 11, 2017 in 4 pages.
Office Action in Danish Application No. DKA201770352, dated Sep. 20, 2017 in 9 pages.
First Examination Report in Australia Application No. AU2016231629, dated Aug. 17, 2017.
Ugale et al., "A Location-Based Personal Task Reminder for Mobile Users in Wireless College Campus Environment (Indoor and Outdoor)," International Journal of Computer Techniques, vol. 2, Issue 1, ISSN:2394-2231 in 7 pages (2015).
Annex to Form PCT/ISA/206 Communication Relating to the Results of the Partial International Search Report for PCT Application No. PCT/US2016/053580 in 9 pages.
Hoffman, Chris, "How to Automatically Run Programs and Set Reminders With the Windows Task Scheduler," Geek Article in 7 pages. Publication date Aug. 31, 2012.
"Skybuds—truly wireless earbuds and smartphone case by Alpha Audiotronics, Inc", Kickstarter, available at: http://web.archive.org/web/20160329093740/https://www.kickstarter.com/projects/421230074/skybuds-truly-wireless-earbuds-and-smartphone-case/description, Mar. 29, 2016, 37 pages.
"Office Action", China Patent Application No. CN201621079333.9, dated Feb. 8, 2017, 3 pages.
"Office Action", China Patent Application No. 201621079334.3, dated Feb. 23, 2017, 3 pages.
"Office Action", China Patent Application No. 201621079342.8, dated Feb. 23, 2017, 4 pages.
"Office Action", China Patent Application No. 201621079467.0, dated Feb. 22, 2017, 4 pages.
"Office Action", China Patent Application No. 201621079468.5, dated Feb. 23, 2017, 4 pages.
"Office Action", China Patent Application No. 201621079469.X, dated Feb. 23, 2017, 3 pages.
"Nokia J (BH-806)", Issue 2.0, Nokia, 2011, 10 pages; available at: https://www.nokia.com/en_int/phones/sites/default/files/user-guides/Nokia_BH-806_UG_en.pdf.
Non-Final Office Action for U.S. Appl. No. 14/198,884, dated Sep. 29, 2017 in 11 pages.
Notice of Allowance for U.S. Appl. No. 15/588,444, filed Nov. 2, 2017 in 15 pages.
Notice of Decision to Grant for China Application No. CN201621079334.3, dated Jul. 17, 2017.
Office Action for Japan Application No. JP2016-186288, dated Nov. 6, 2017 in 8 pages.
Office Action for Japan Application No. JP2016-186290, dated Nov. 6, 2017 in 8 pages.
Office Action for Taiwan Application No. TW105130920, dated Oct. 23, 2017 in 6 pages.
U.S. Appl. No. 15/071,177 in 143 pages.
U.S. Appl. No. 11/824,453 in 188 pages.
U.S. Appl. No. 15/076,271 in 193 pages.
Ugale, et al., A Location-Based Personal Task Reminder for Mobile Users in Wireless College Campus Environment (Indoor And Outdoor); International Journal of Computer Techniques, vol. 2, Issue 1, (2005) in 7 pages.
International Search Report and Written Opinion for PCT Application No. PCT/US2016/035911 in 11 pages.
International Search Report and Written Opinion for PCT Application No. PCT/US2016/033972 in 14 pages.
Article entitled: "Siri vs. Cortana—Happy Anniversary (Commercial)," Nokia Ira8, Published on Jul. 28, 2014, 1 page.
Article entitled: "Launch Files & Applications ona Scheduled Date with Calendar for Mac OS X," OSXDaily, dated Apr. 15, 2013, printed from BNSDOCKID:<XP_55285939A_>5/launch-file-app-scheduled-date-mac-os-x/ in 5 pages.
Article entitled: "How to Automatically Run Programs and Set Reminders With the Windows Task Scheduler," printed on May 7, 2016 13:33 from BNSDOCKID:<XP_55285937A_>23393/how-to-automatically-run-programs-and-set-reminders-with-the-windows-task-scheduler in 7 pages.
Notice of Allowance with notification date of Jun. 6, 2016 for U.S. Appl. No. 14/731,249 in 11 pages.
Artide entitled: "Like Trigger?" Copyright 2013-2015, Egomotion Corp., printed from http://gettrigger.com/ in 5 pages.
Brezinski, Mark, "Sennheiser MX W1 Headphones Review, The MX W1s seem to be more of a tech demo than an actual consumer item" from Reviewed.com, printed from http://headphones.reviewed.com/content/sennheiser-mx-w1-headphones-review-769, on Dec. 17, 2016, 9 pages.
Simger Beats Wireless Earbud Headphones Review, by Nerd Techy, Your Guide to New Technolgoy, printed from http://nerdtechy.com/simger-beats-review on Dec. 15, 2016. 9 pages.
Nokia J (BH-806), Manual PDF Download in 10 pages.
Office Action dated Jan. 26, 2017 from China in Application No. 201621078697.5 in 4 pages.
Office Action dated Feb. 8, 2017 in U.S. Appl. No. 15/275,366 in 14 pages.
Non-Final Office Action for U.S. Appl. No. 15/273,683, dated Nov. 16, 2017 in 10 pages.
Notice of Allowance for U.S. Appl. No. 15/273,685, dated Nov. 29, 2017 in 8 pages.
Non-Final Office Action for U.S. Appl. No. 15/273,691, dated Nov. 15, 2017 in 13 pages.
Notice of Decision to Grant for Korean Application No. KR10-2016-0122237, dated Nov. 9, 2017 in 3 pages.
Notice of Decision to Grant for Korean Application No. KR10-2016-0122269, dated Nov. 8, 2017 in 3 pages.
Office Action for Korean Application No. TW105130921, dated Nov. 22, 2017 in 8 pages.
Office Action for Korean Application No. TW105130923, dated Dec. 6, 2017 in 4 pages.
First Action Interview Pilot Program Pre-Interview Communication issued in U.S. Appl. No. 15/273,671, dated Jan. 10, 2018 in 4 pages.
First Action Interview Pilot Program Pre-Interview Communication issued in U.S. Appl. No. 15/273,696, dated Jan. 18, 2018 in 5 pages.
Office Action issued in Japanese Application No. JP2016-186289, dated Jan. 9, 2018 in 5 pages.
First Action Interview Pilot Program Pre-Interview in U.S. Appl. No. 15/273,687, dated Jan. 25, 2018 in 3 pages.
First Action Interview Pilot Program Pre-Interview Communication in U.S. Appl. No. 15/273,690, dated Feb. 9, 2018 in 5 pages.
Notice of Allowance in U.S. Appl. No. 15/680,095, dated Dec. 27, 2017 in 10 pages.
First Action Interview Pilot Program Pre-Interview Communication in U.S. Appl. No. 15/851,348, dated Jan. 31, 2018 in 3 pages.
First Examination Report in Australia Application No. AU2017279776, dated Jan. 22, 2018 in 3 pages.
Office Action in China Application No. CN201610848841.7, dated Jan. 2, 2018 in 10 pages.
Office Action in China Application No. CN201610848843.6, dated Dec. 12, 2017 in 22 pages.
Office Action in China Application No. CN201610849637.7, dated Dec. 28, 2017 in 16 pages.
Office Action in China Application No. CN201610849639.6, dated Dec. 21, 2017 in 16 pages.
Office Action in German Application No. DKPA201770347, dated Jan. 26, 2018 in 6 pages.
Office Action in PCT Application No. EP16190180.6, dated Feb. 13, 2018 in 5 pages.
Office Action in Korea Application No. KR10-2016-0122189, dated Feb. 5, 2018 in 10 Pages.

(56) **References Cited**

OTHER PUBLICATIONS

Notice of Decision to Grant in Taiwan Application No. TW105130924, dated Jan. 22, 2018 in 5 pages.
First Action Interview Pilot Program Pre-Interview Communication in U.S. Appl. No. 15/273,698, dated Mar. 21, 2018 in 8 pages.
Office Action in Danish Application No. DKPA 2017 70348, dated Mar. 7, 2018 in 4 pages.
Office Action in Danish Application No. DKPA 2017 70350, dated Mar. 7, 2018 in 7 pages.
Notice of Decision to Grant in Japanese Application No. JP2016-186288, dated Feb. 26, 2018 in 3 pages.
Notice of Decision to Grant in Japanese Application No. JP2016-186290, dated Mar. 5, 2018 in 3 pages.
Notice of Decision to Grant in Japanese Application No. JP2018-018945, dated Mar. 5, 2018 in 3 pages.
Office Action in Korean Application No. KR10-2016-0122287, dated Feb. 20, 2018 in 5 pages.
Final Office Action in Taiwan Application No. TW105130920, dated Feb. 23, 2018 in 4 pages.

* cited by examiner

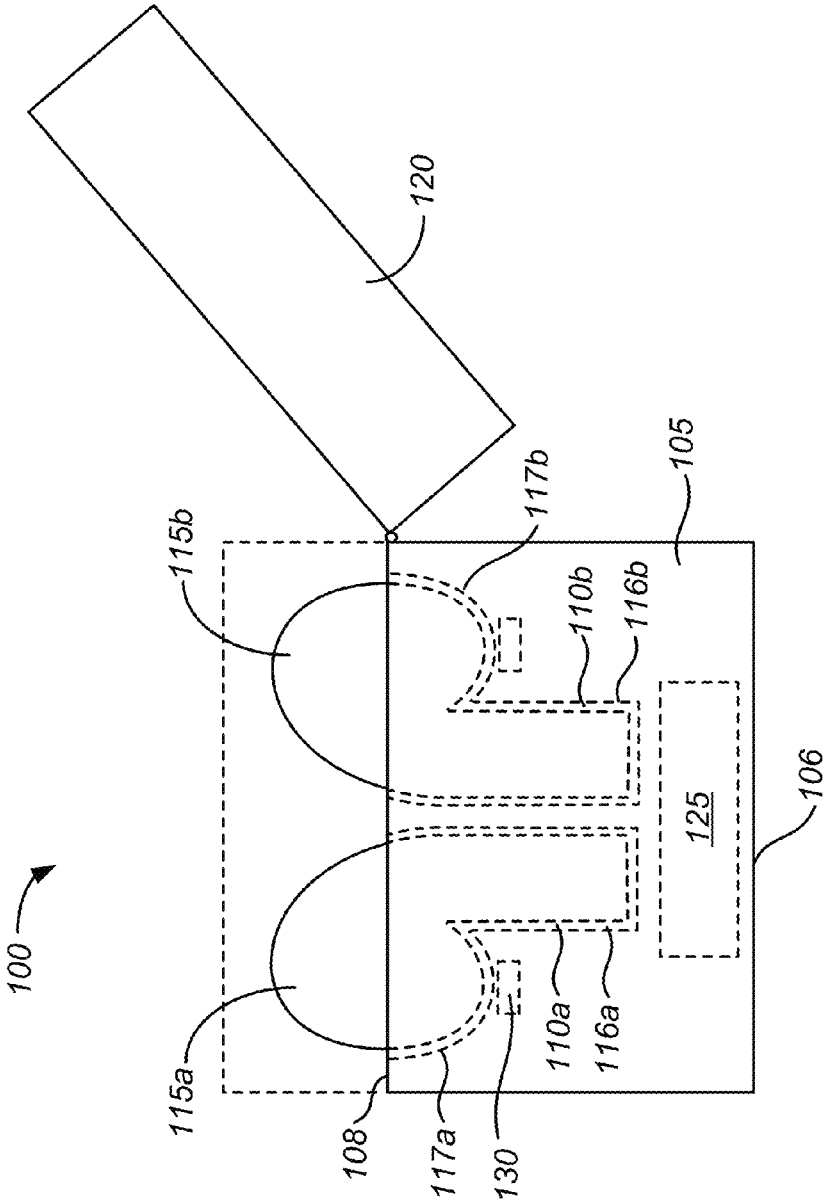
100
120
105
115b
117b
110b
116b
125
106
115a
108
117a
130
110a
116a

FIG. 1

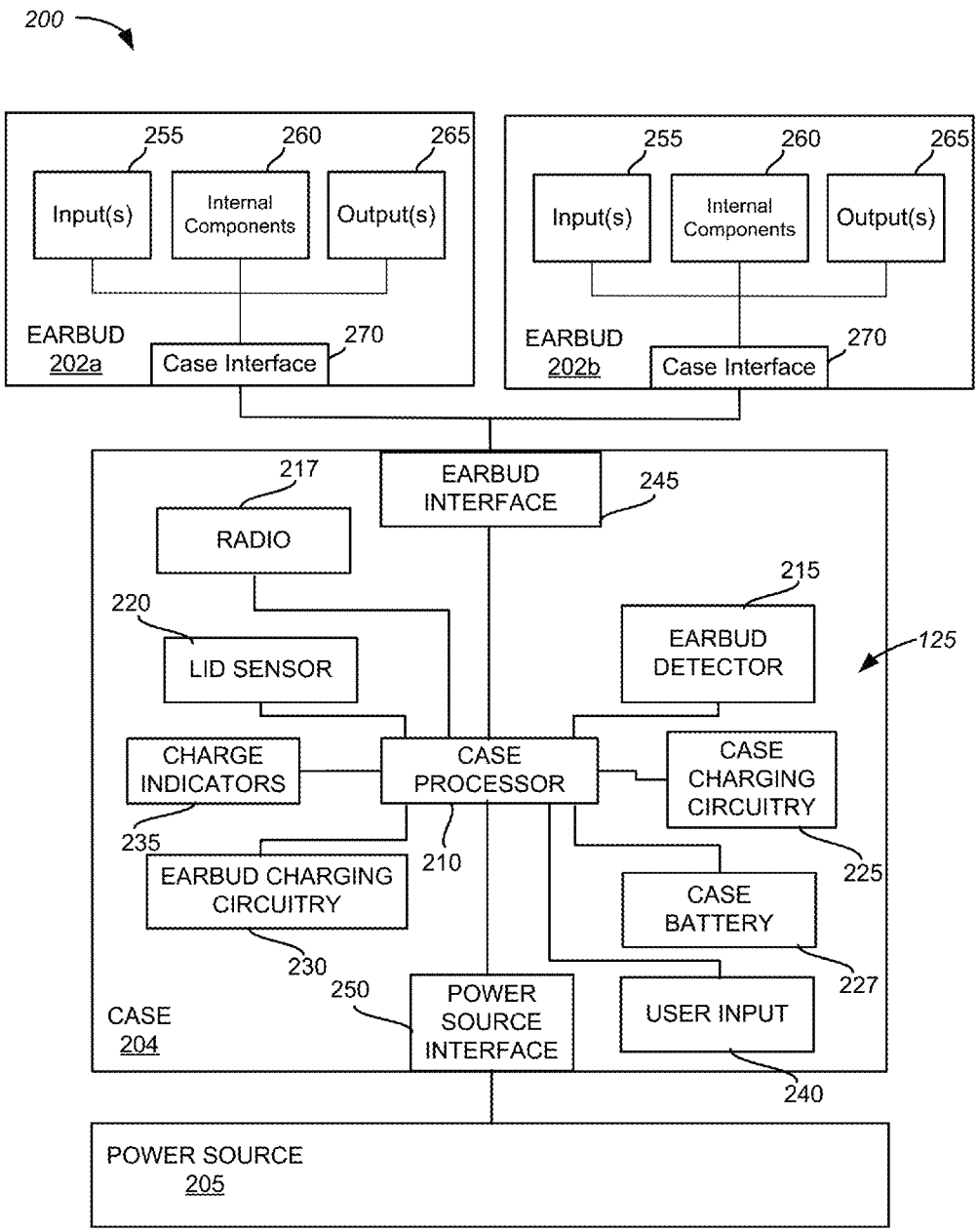
200
255
260
265
Input(s)
Internal Components
Output(s)
EARBUD 202a
Case Interface
270
255
260
265
Input(s)
Internal Components
Output(s)
EARBUD 202b
Case Interface
270
217
EARBUD INTERFACE
245
RADIO
215
220
EARBUD DETECTOR
125
LID SENSOR
CHARGE INDICATORS
CASE PROCESSOR
CASE CHARGING CIRCUITRY
235
210
225
EARBUD CHARGING CIRCUITRY
CASE BATTERY
230
227
250
POWER SOURCE INTERFACE
USER INPUT
CASE 204
240
POWER SOURCE 205

FIG. 2

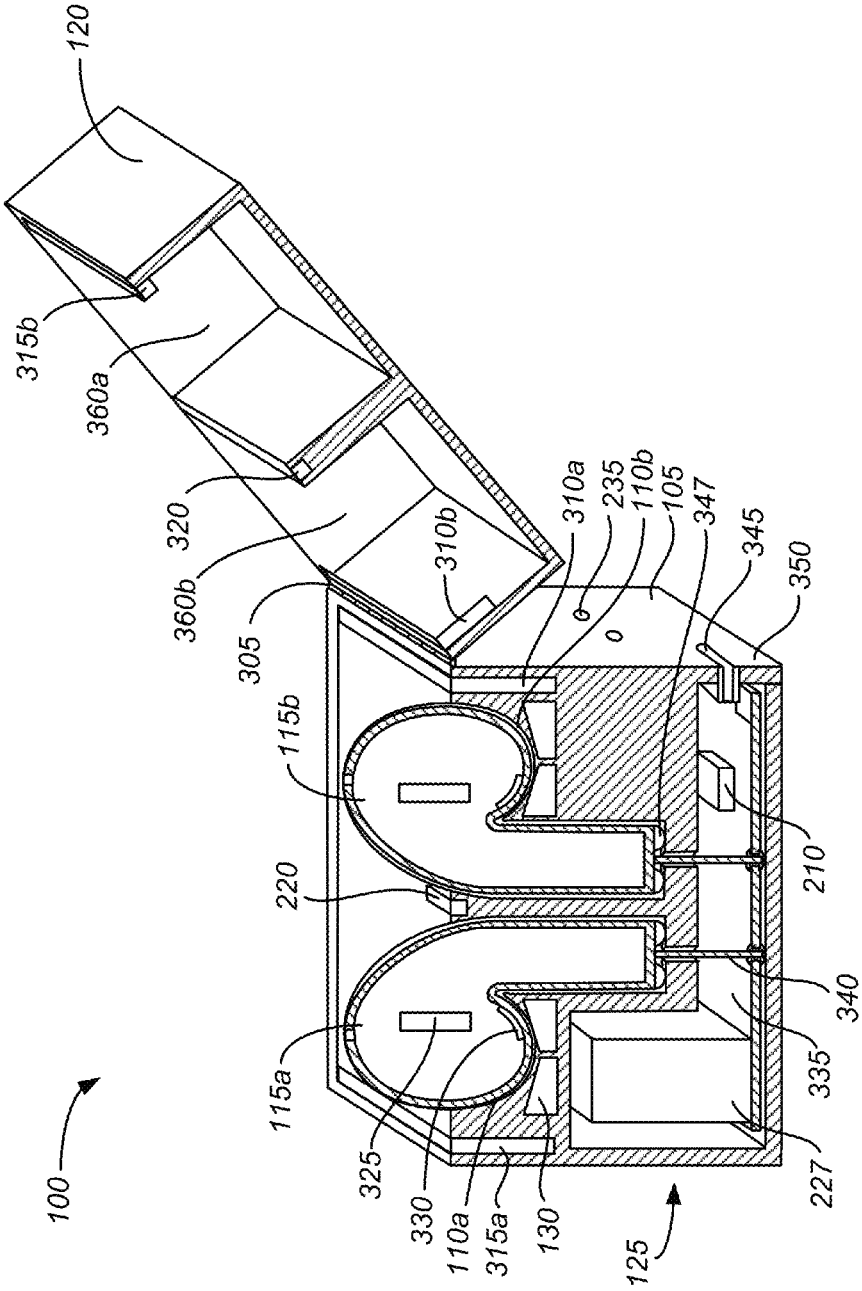
120
315b
360a
320
360b
305
310b
310a
235
110b
105
347
345
350
115b
220
115a
325
330
110a
315a
130
125
100
210
340
335
227

FIG. 3

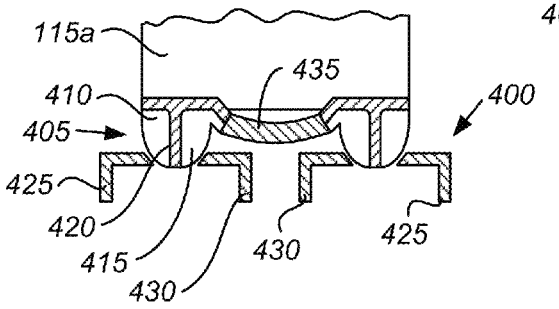

FIG. 4A

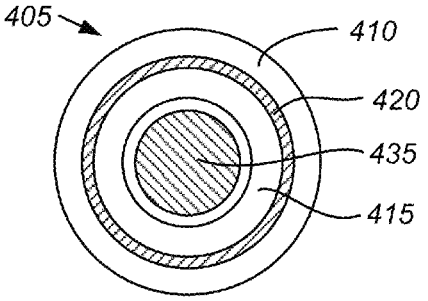

FIG. 4B

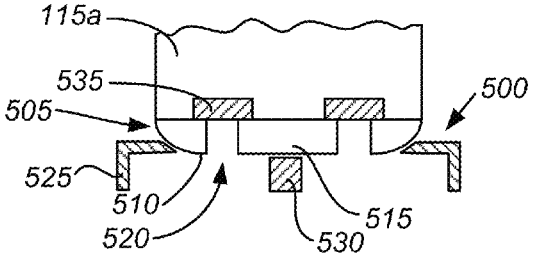

FIG. 5A

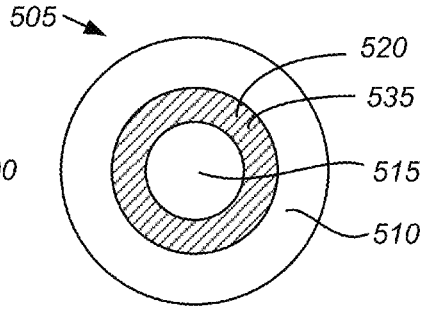

FIG. 5B

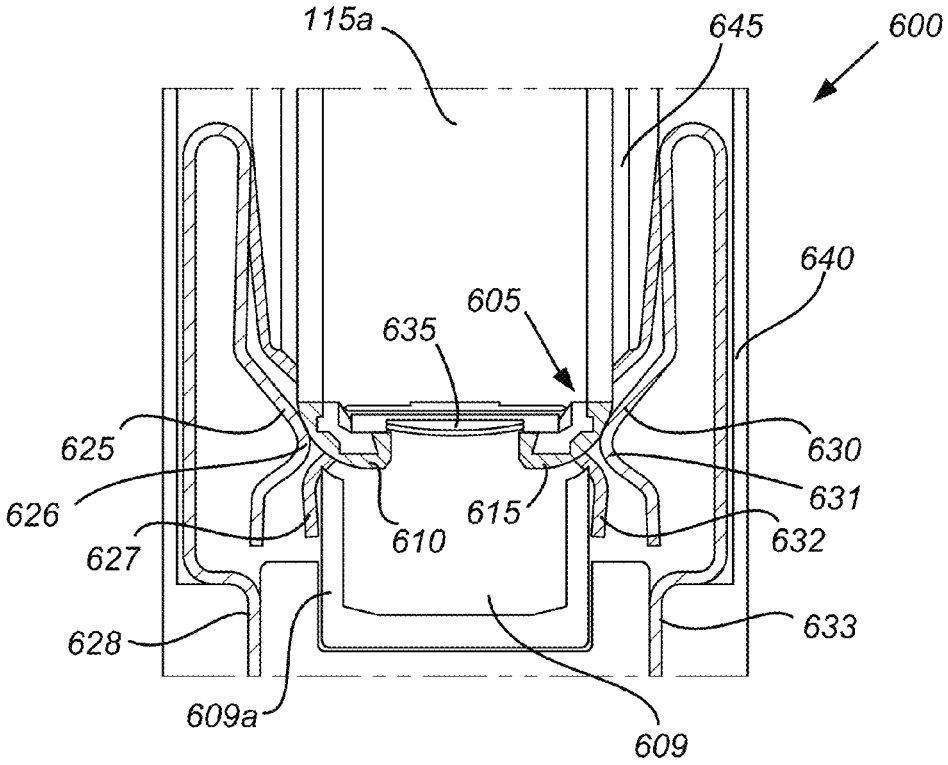
115a
645
600
640
605
635
625
630
626
631
615
610
627
632
628
633
609a
609

FIG. 6A

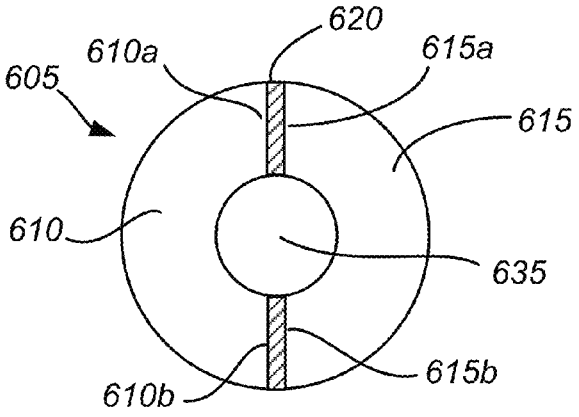
620
610a
615a
605
615
610
635
615b
610b

FIG. 6B

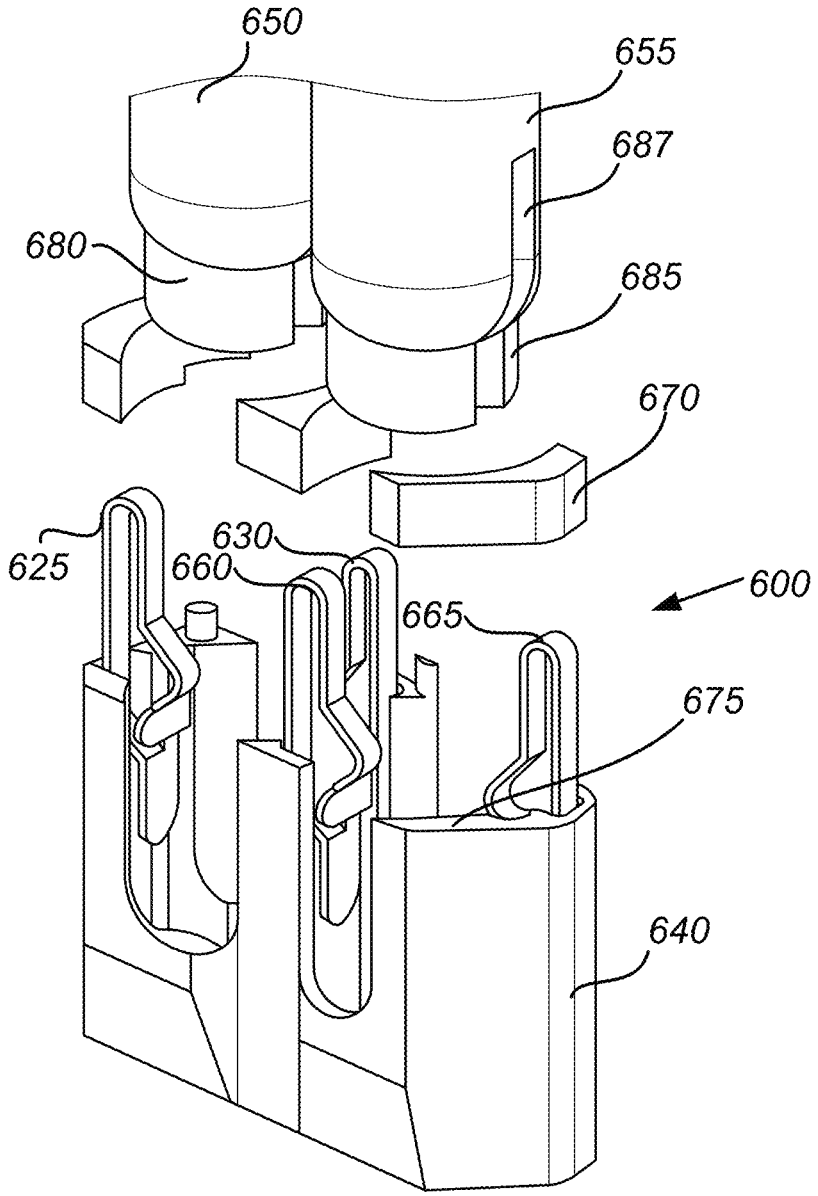

FIG. 6C

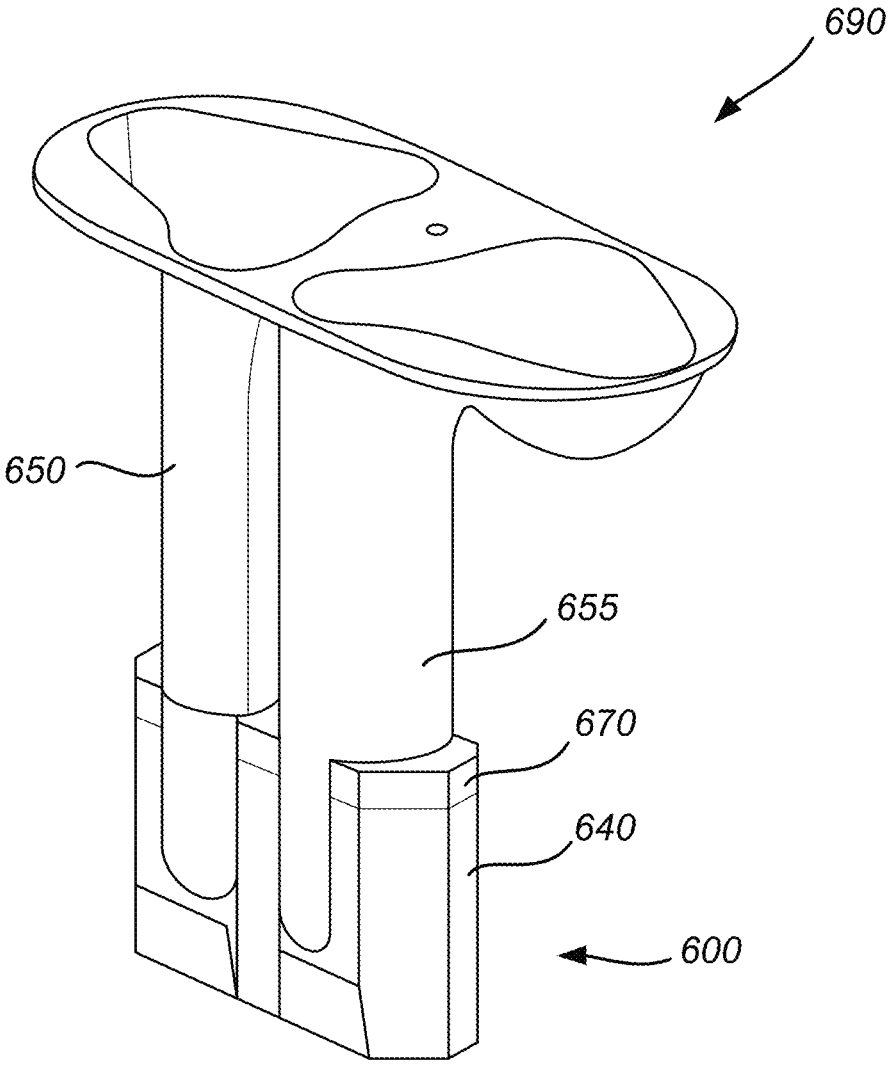

FIG. 6D

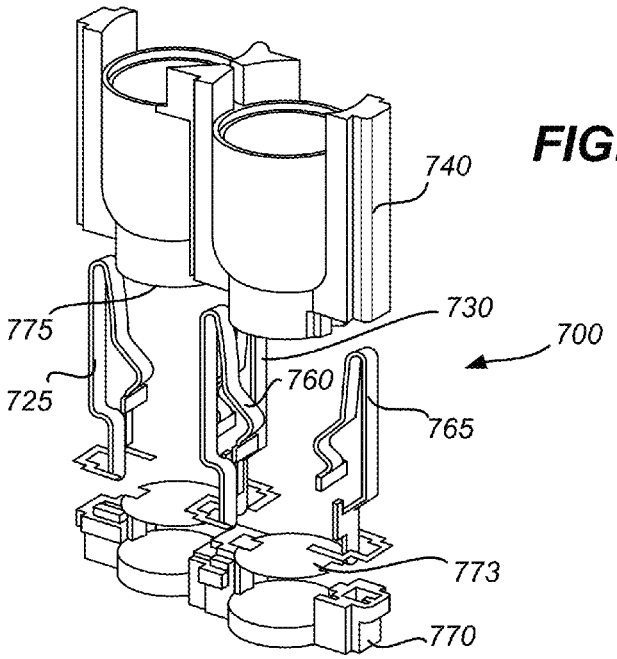

FIG. 7A

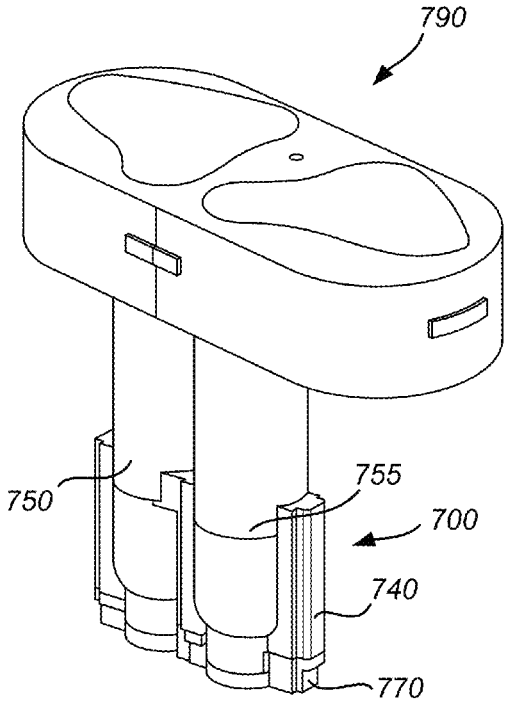

FIG. 7B

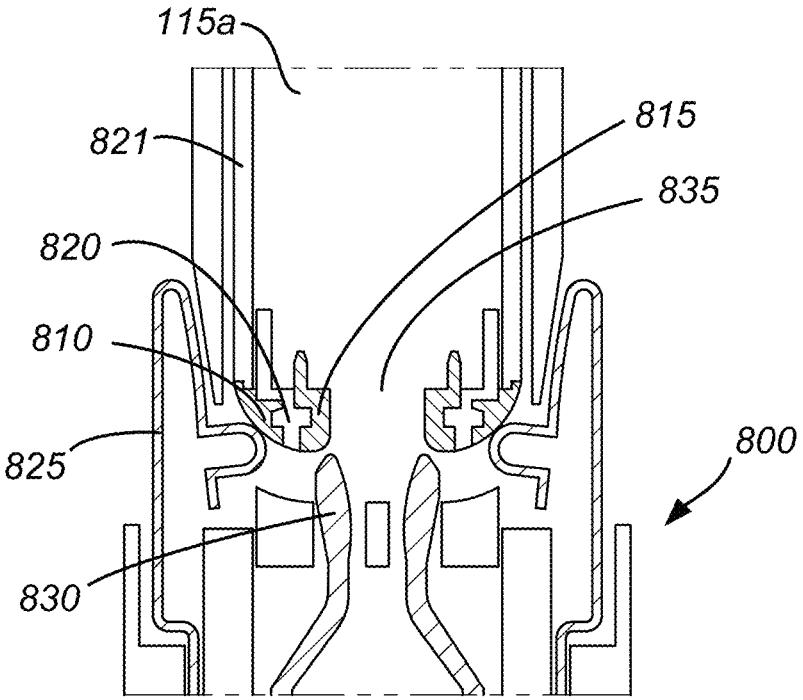

FIG. 8A

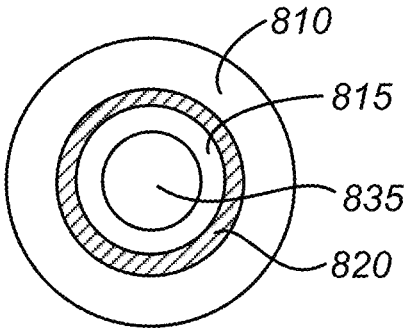

FIG. 8B

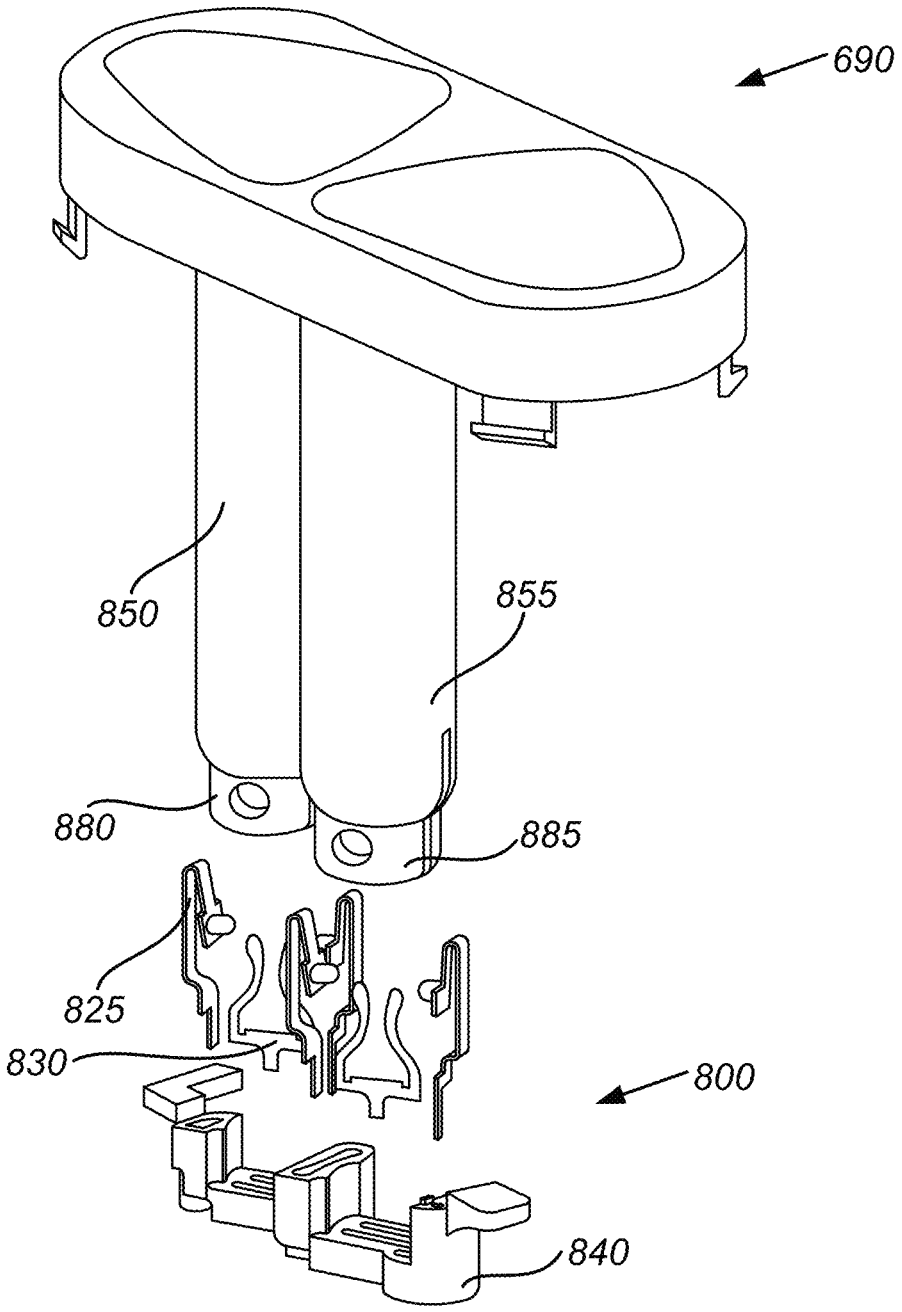

FIG. 8C

FIG. 9A

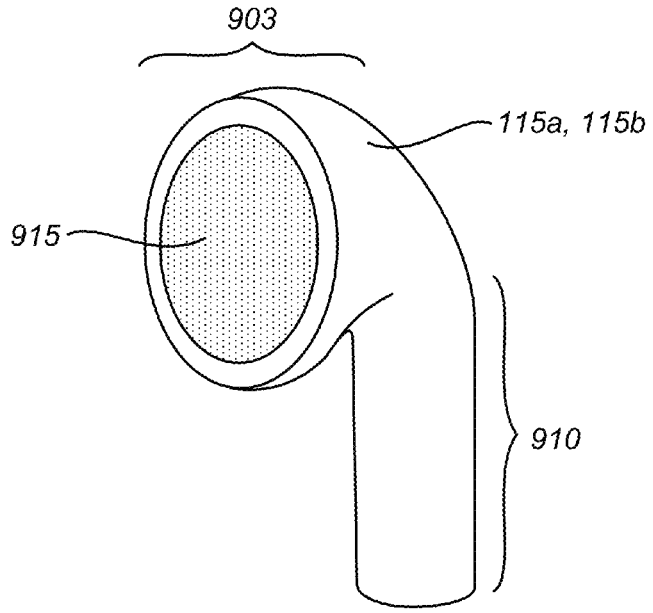

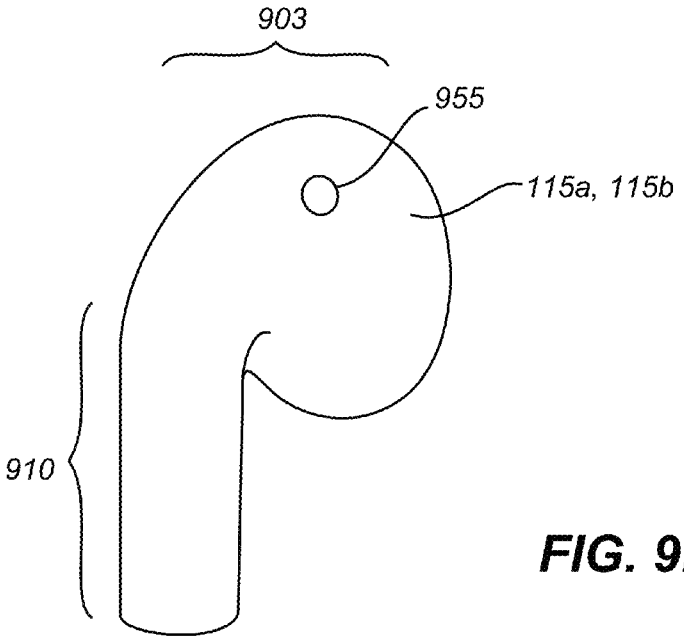

FIG. 9B

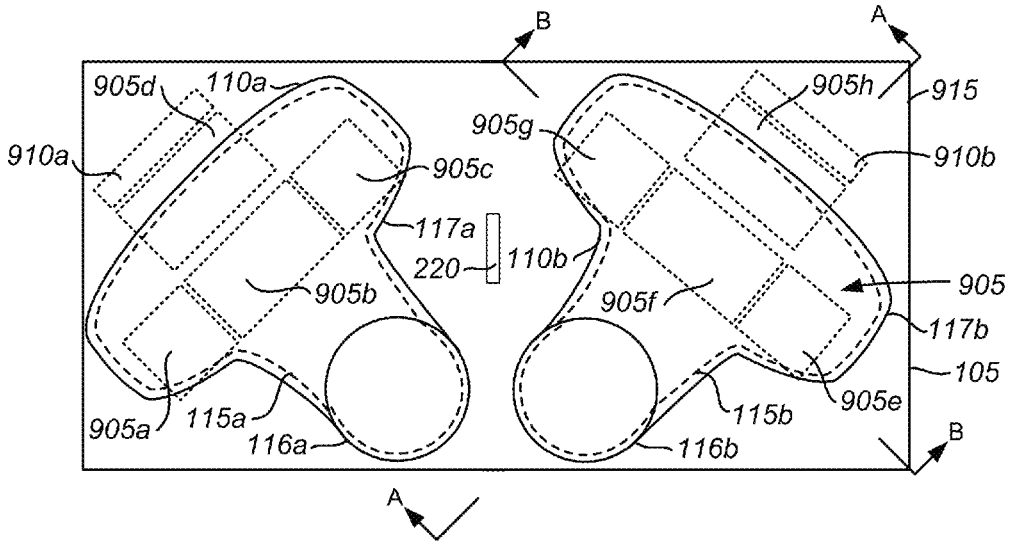

FIG. 10

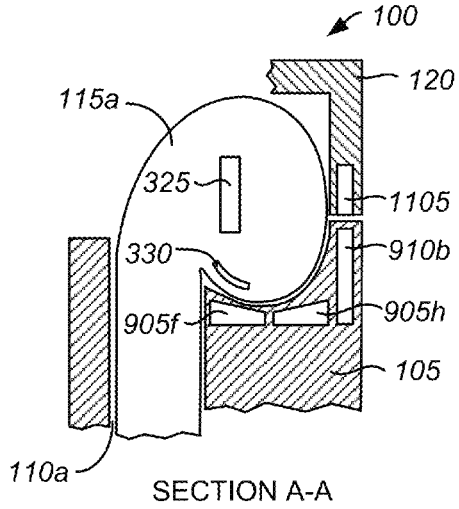

SECTION A-A

FIG. 11

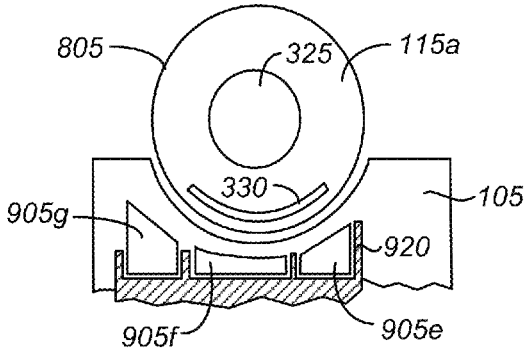

SECTION B-B

FIG. 12

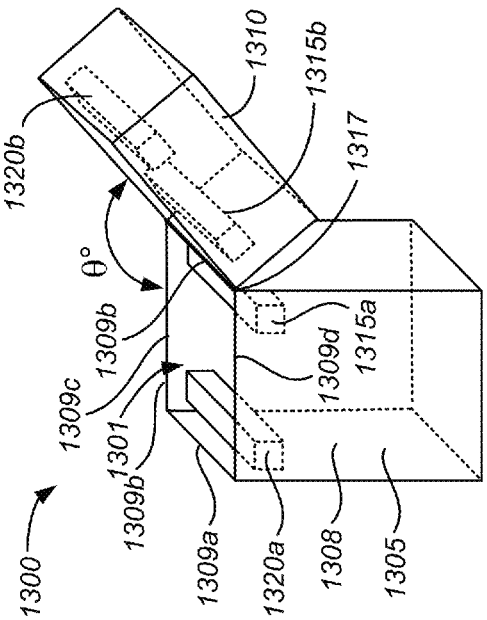

FIG. 14

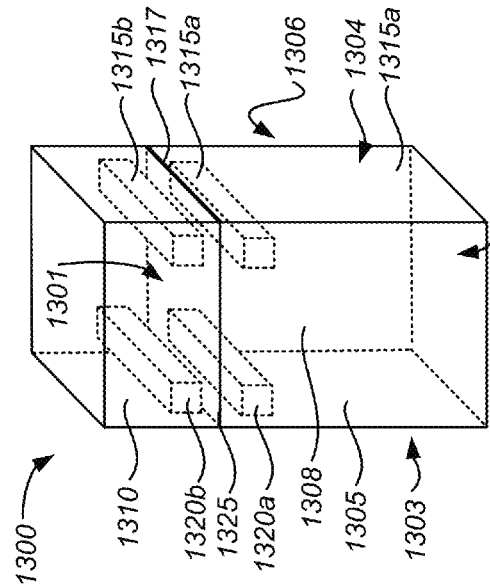

FIG. 13

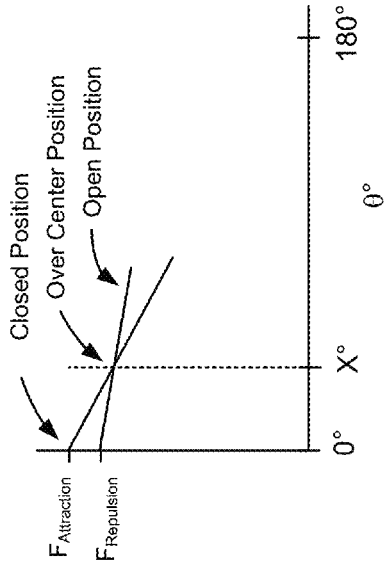

FIG. 15

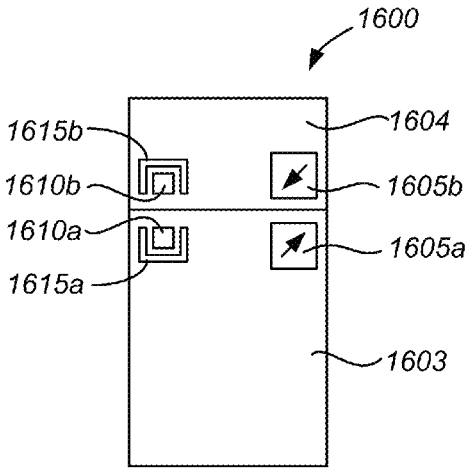

FIG. 16

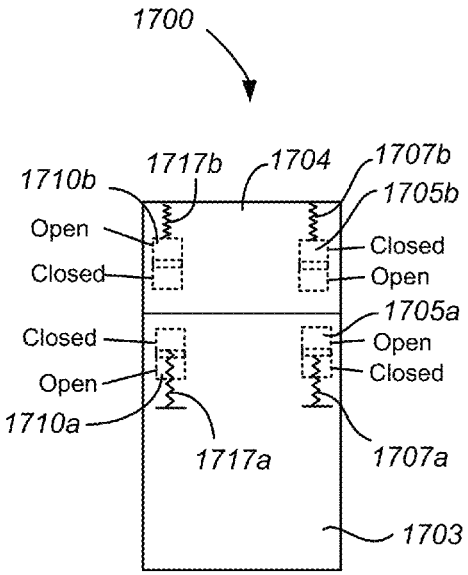

FIG. 17

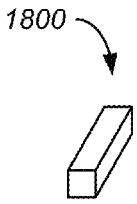

FIG. 18

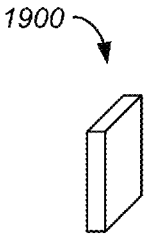

FIG. 19

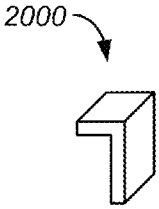

FIG. 20

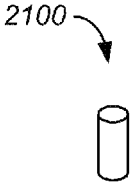

FIG. 21

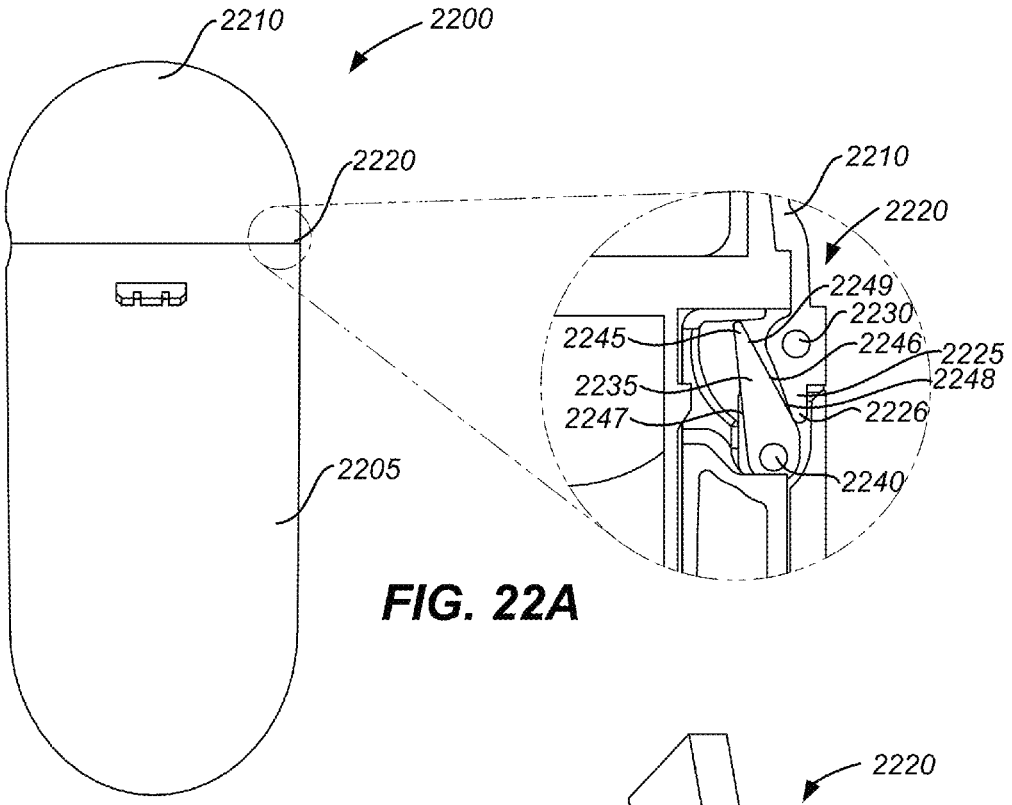

FIG. 22A

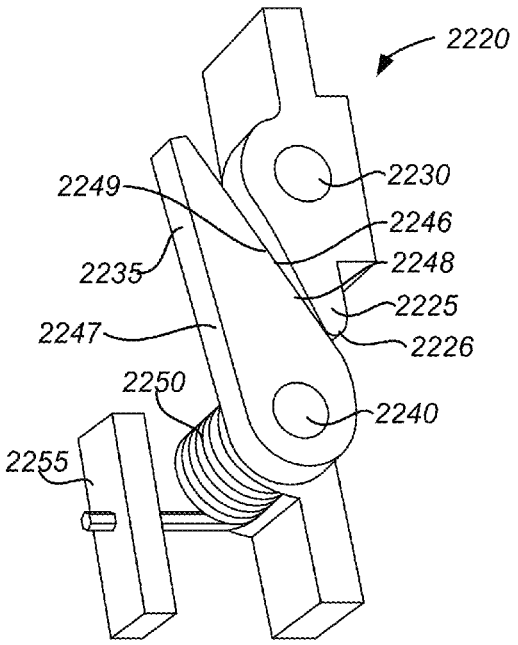

FIG. 22B

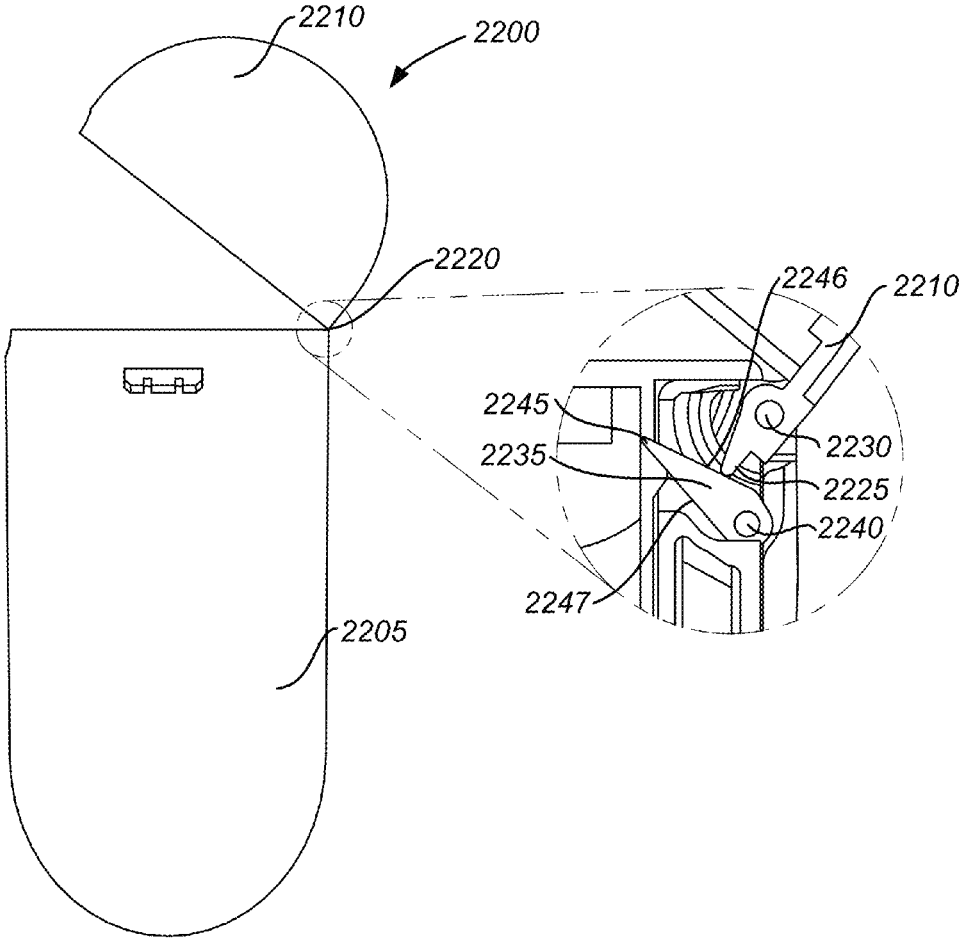

FIG. 22C

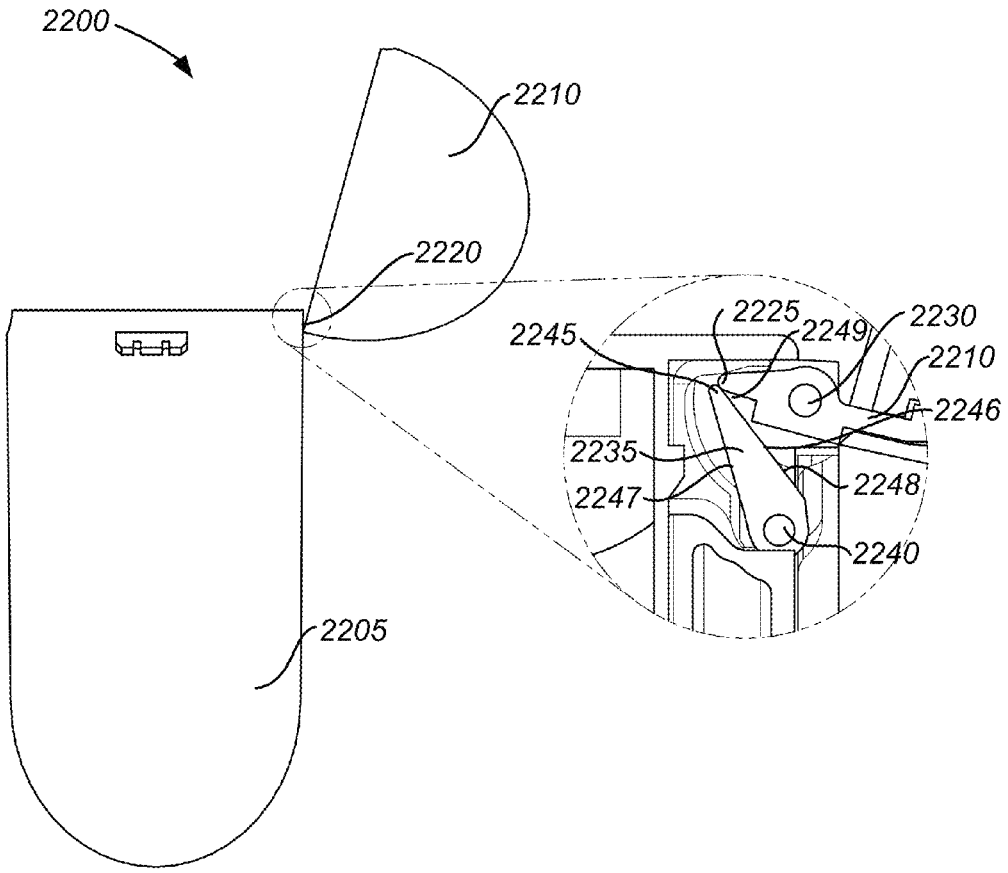
2200
2210
2220
2205
2245
2225
2249
2230
2210
2246
2235
2247
2248
2240

FIG. 22D

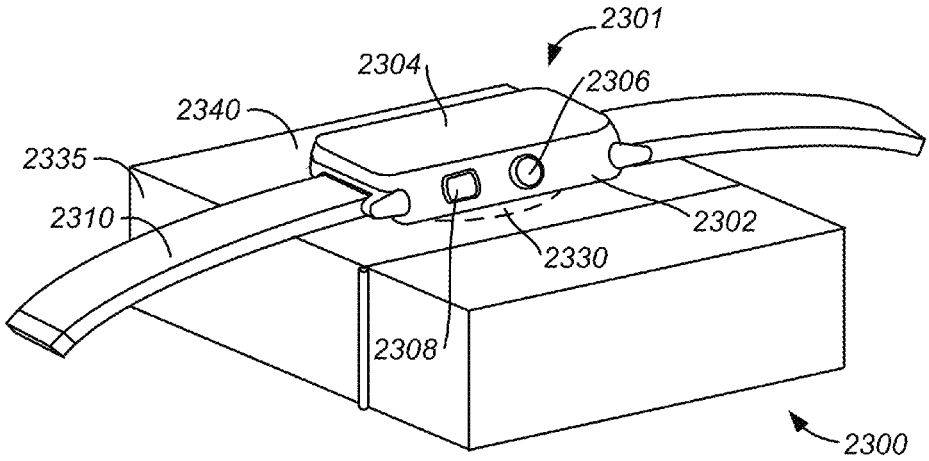
2301
2304
2306
2340
2335
2310
2302
2330
2308
2300

FIG. 23

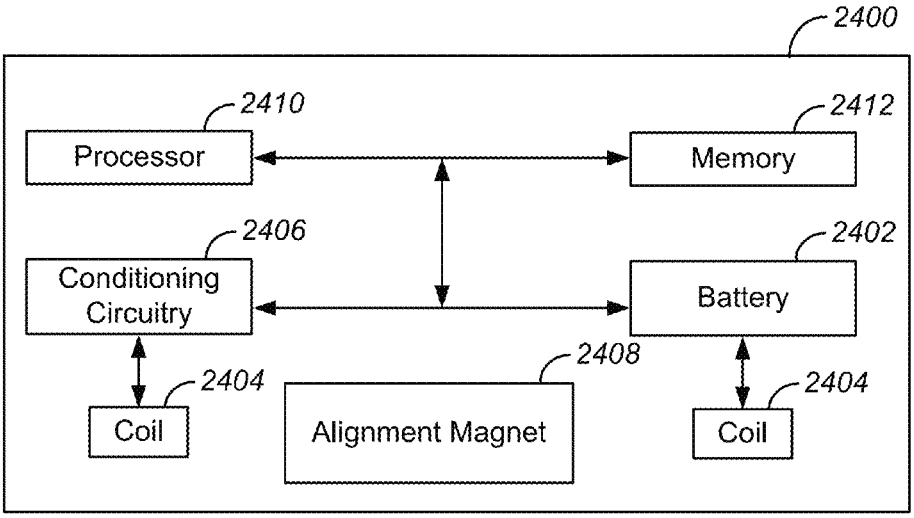
2400
2410
Processor
2412
Memory
2406
Conditioning Circuitry
2402
Battery
2404
Coil
2408
Alignment Magnet
2404
Coil

FIG. 24

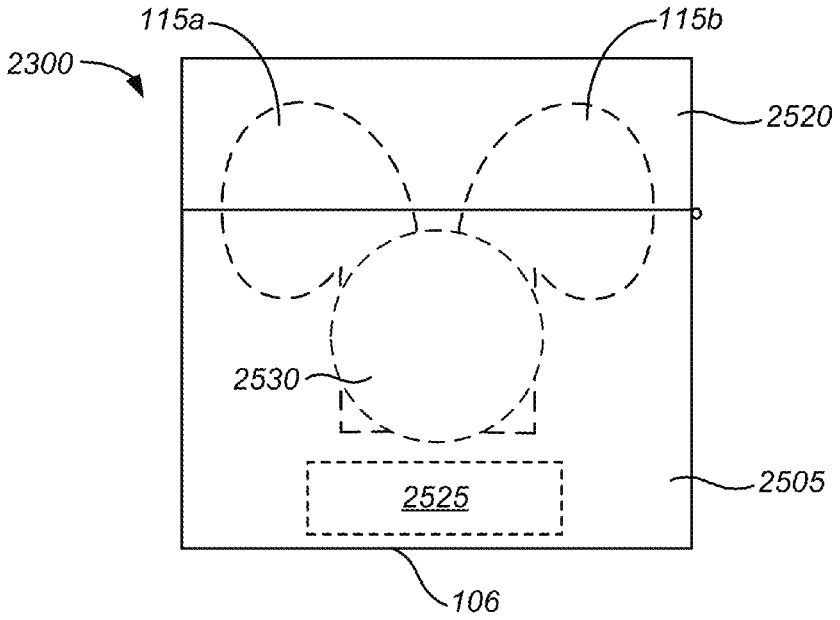
115a
115b
2300
2520
2530
2525
2505
106

FIG. 25

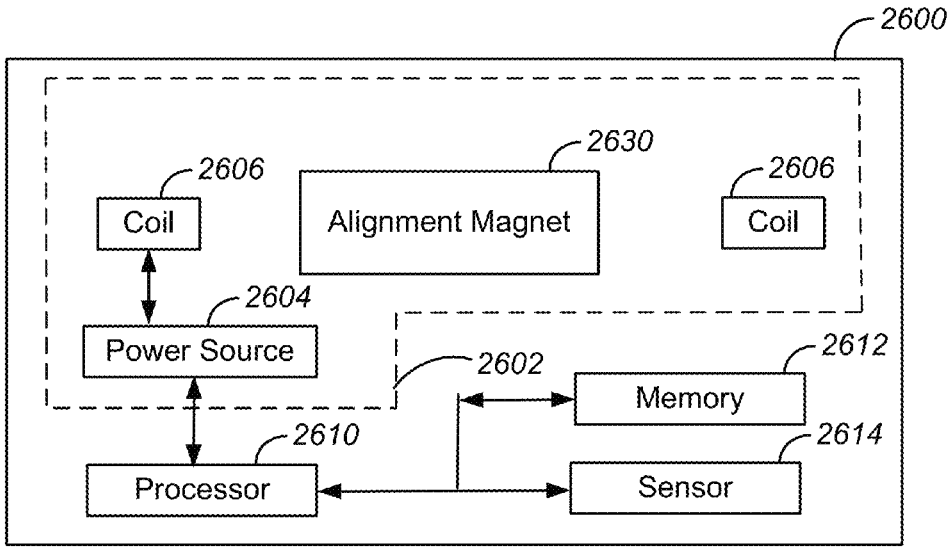
2600
2630
2606
Coil
Alignment Magnet
2606
Coil
2604
Power Source
2602
2612
Memory
2610
2614
Processor
Sensor

FIG. 26

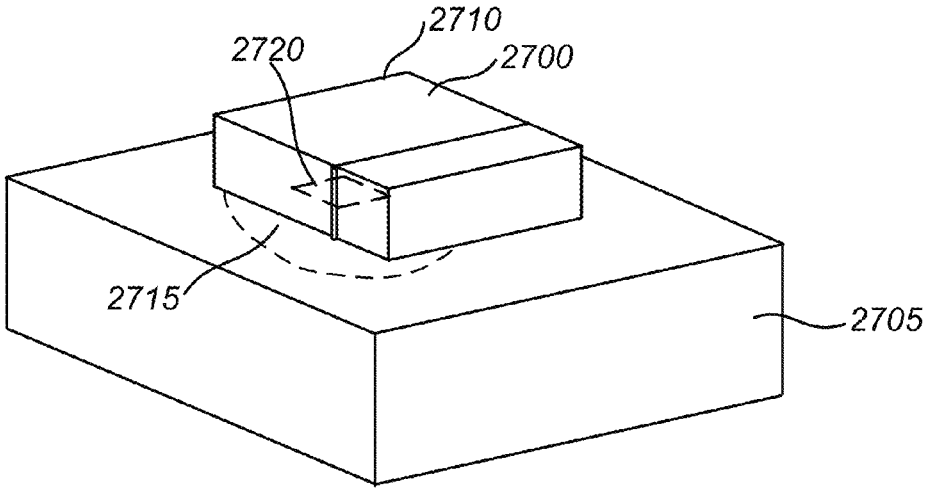
2710
2720
2700
2715
2705

FIG. 27

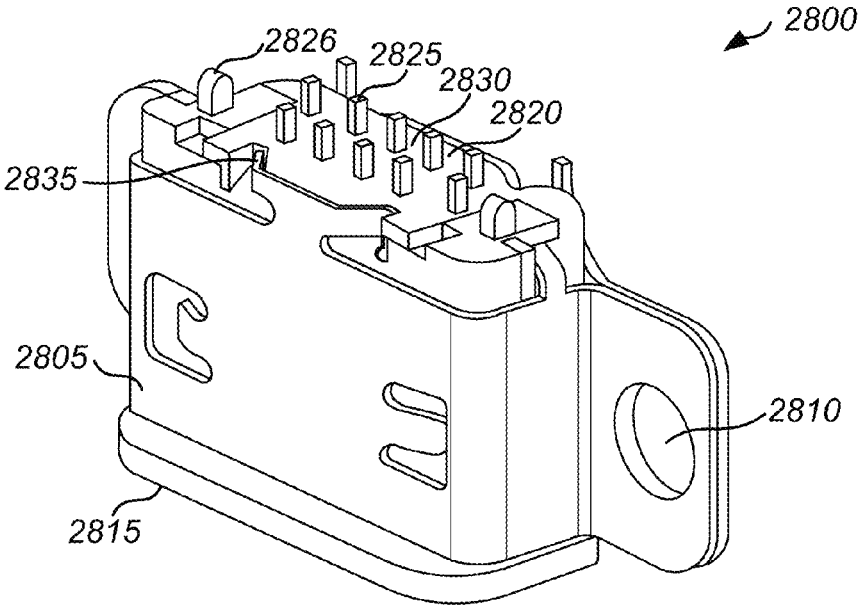
2800
2826
2825
2830
2820
2835
2805
2810
2815

FIG. 28

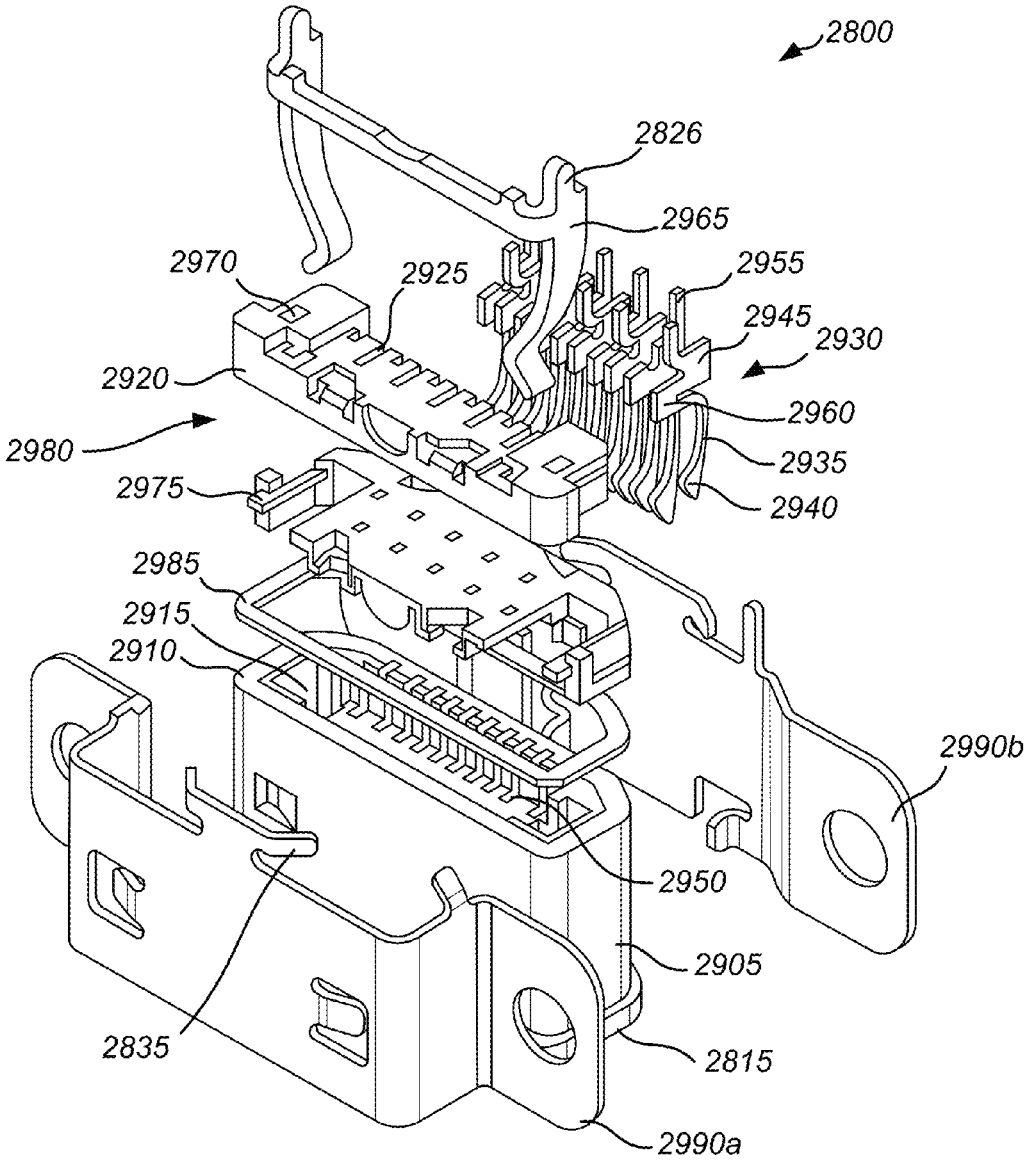
2800
2826
2965
2970
2925
2955
2945
2930
2920
2960
2980
2935
2975
2940
2985
2915
2910
2990b
2950
2905
2835
2815
2990a

FIG. 29

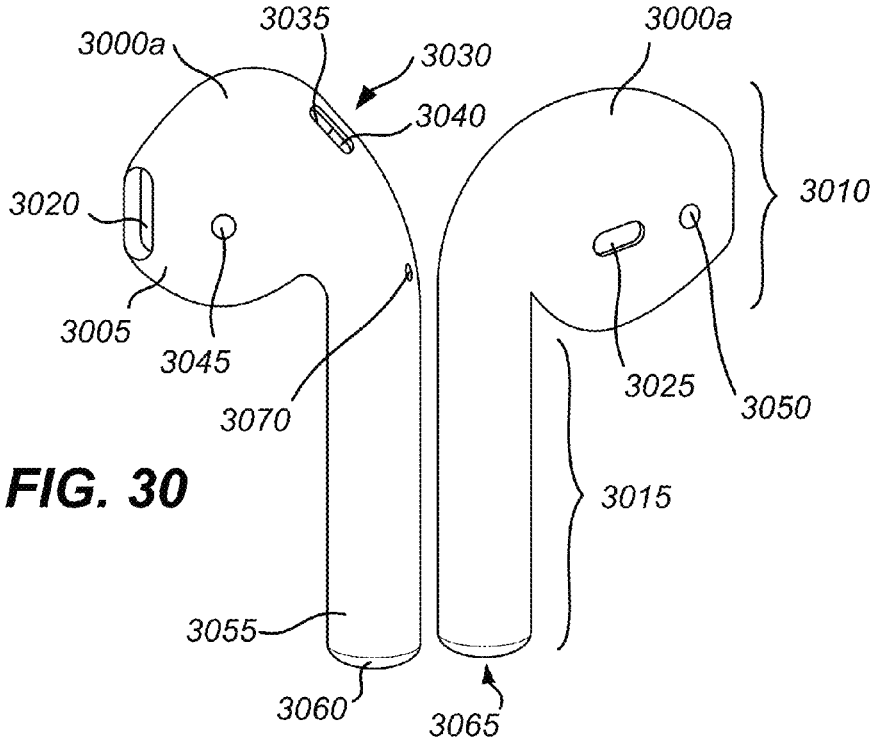
3000a
3035
3030
3000a
3040
3010
3020
3005
3045
3070
3025
3050
3015
3055
3060
3065

FIG. 30

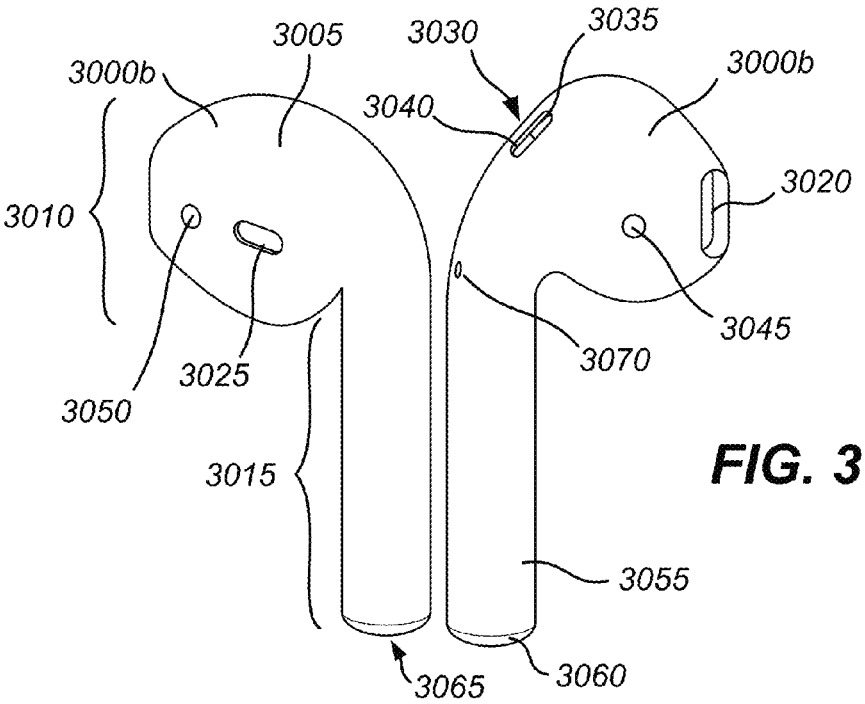
3005
3030
3035
3000b
3000b
3040
3020
3010
3045
3070
3025
3050
3015
3055
3065
3060

FIG. 31

FIG. 32

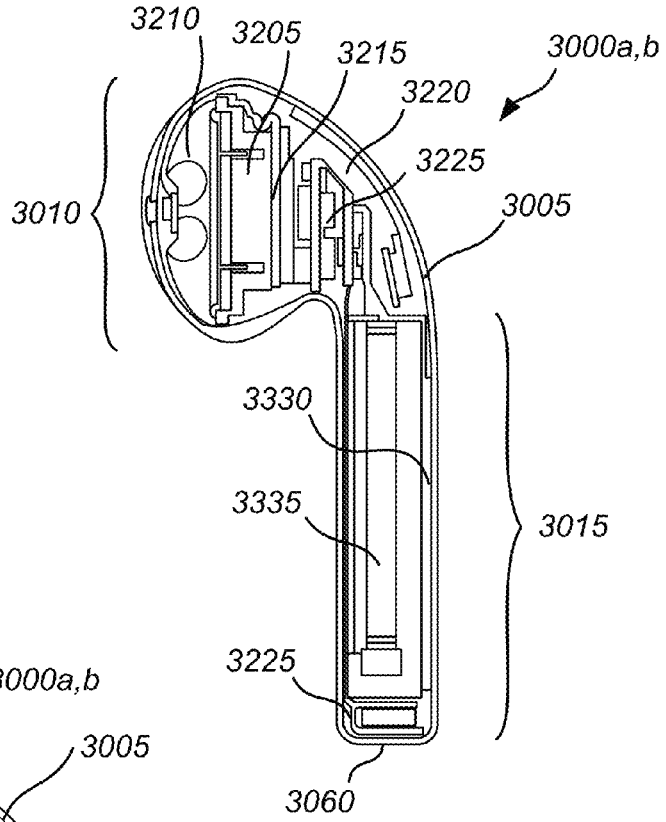
3210
3205
3215
3000a,b
3220
3225
3010
3005
3330
3335
3015
3225
3060

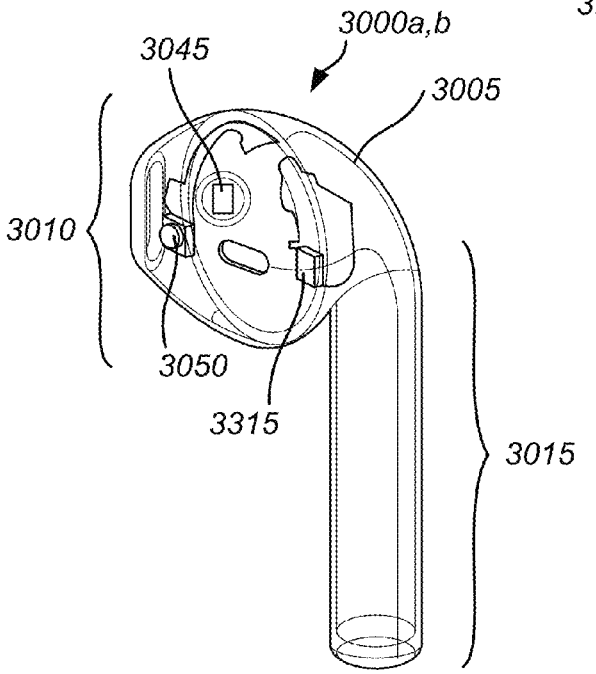
3045
3000a,b
3005
3010
3050
3315
3015

FIG. 33

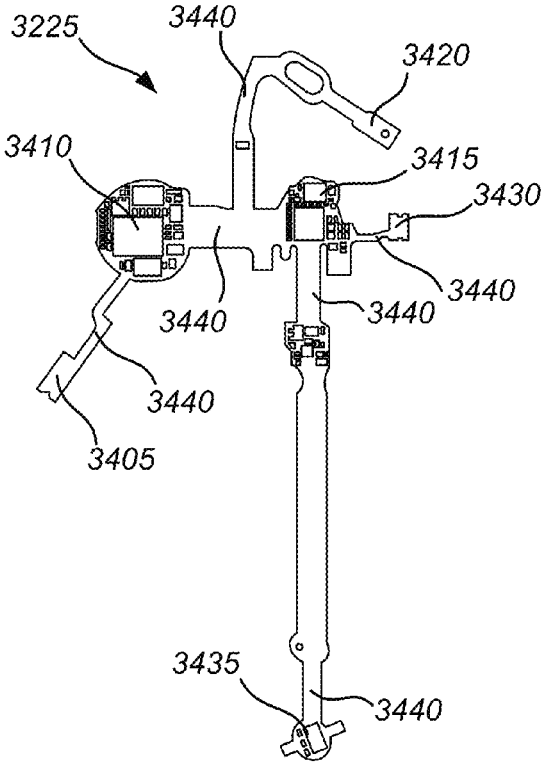
3225
3440
3420
3410
3415
3430
3440
3440
3440
3440
3405
3435
3440

FIG. 34

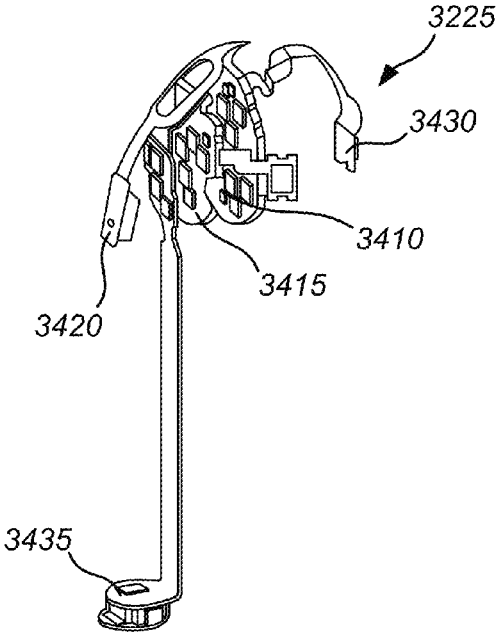
3225
3430
3410
3415
3420
3435

FIG. 35

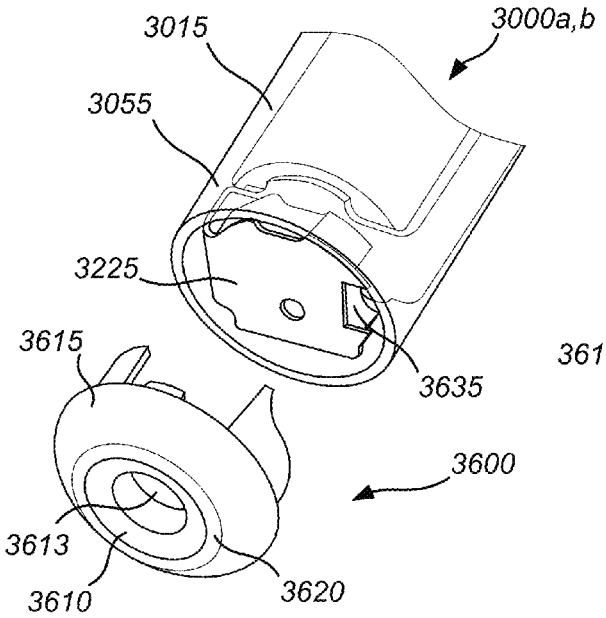

FIG. 36

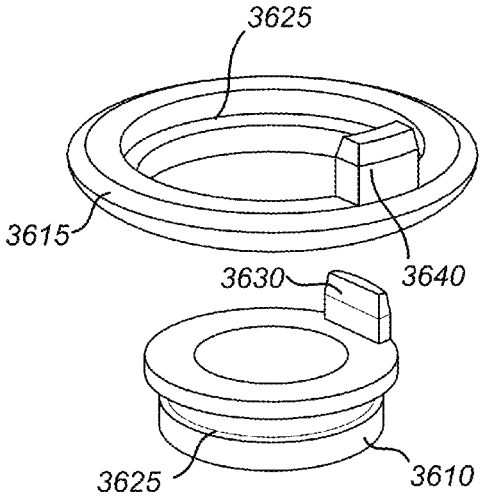

FIG. 37

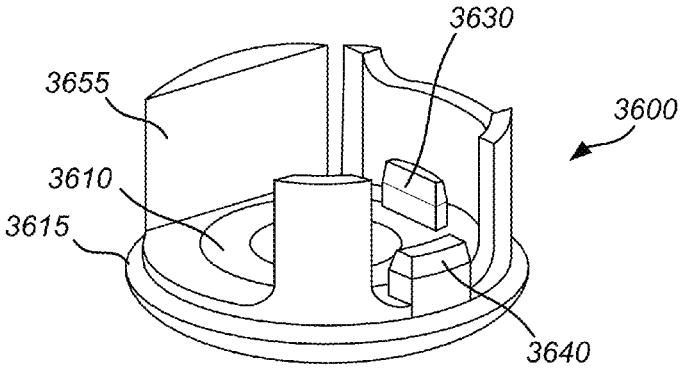

FIG. 38

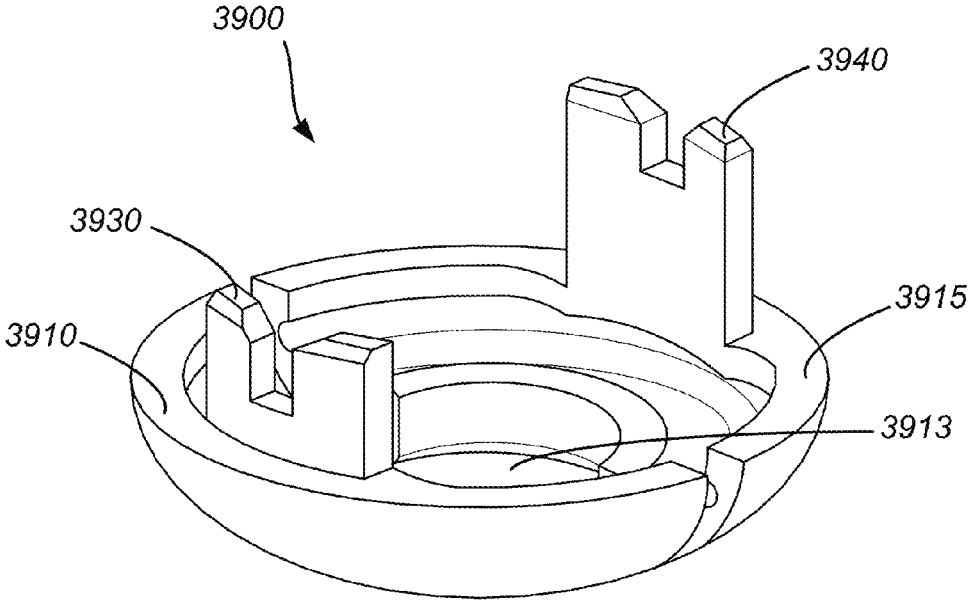
3900
3940
3930
3915
3910
3913

FIG. 39

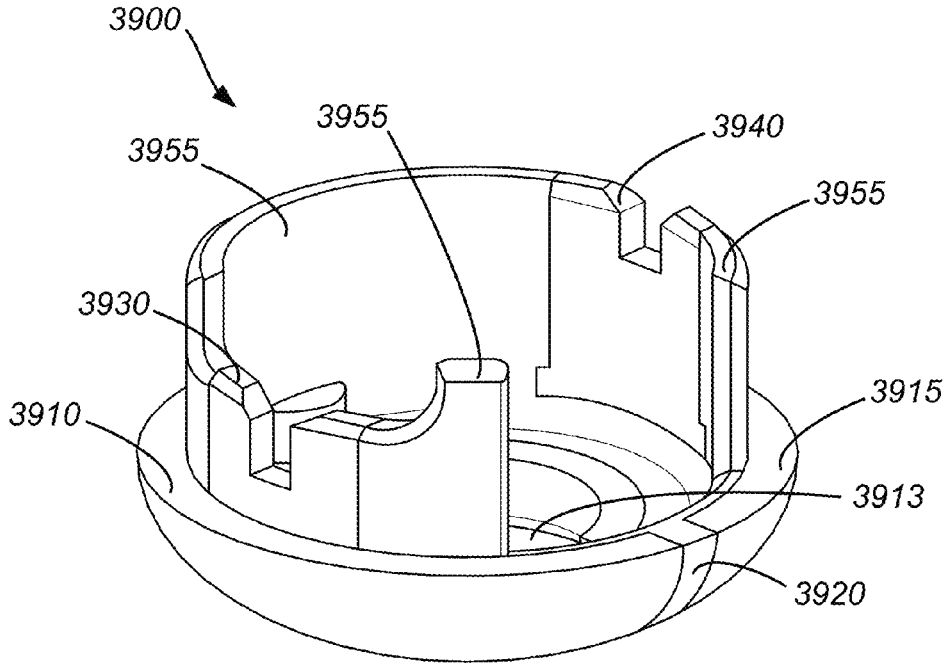
3900
3955
3940
3955
3955
3930
3915
3910
3913
3920

FIG. 40

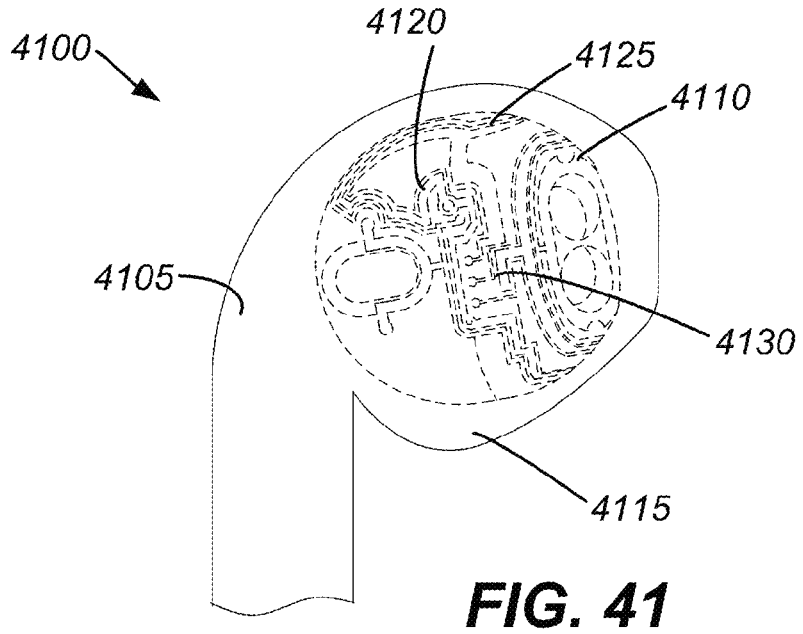
4100
4120
4125
4110
4105
4130
4115

FIG. 41

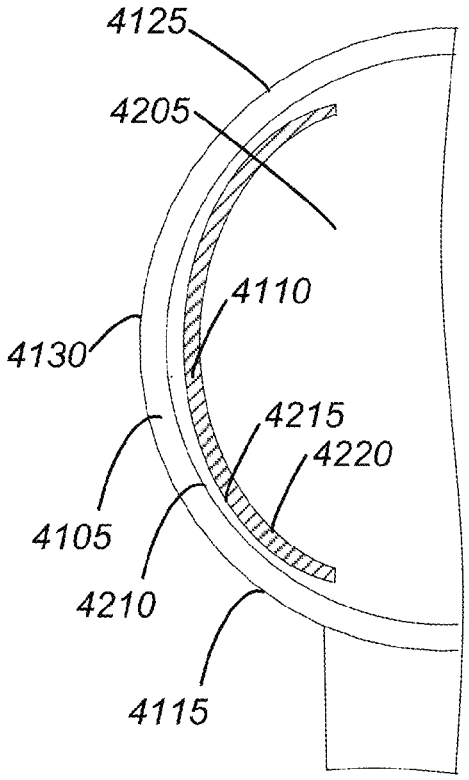
4125
4205
4110
4130
4215
4220
4105
4210
4115

FIG. 42

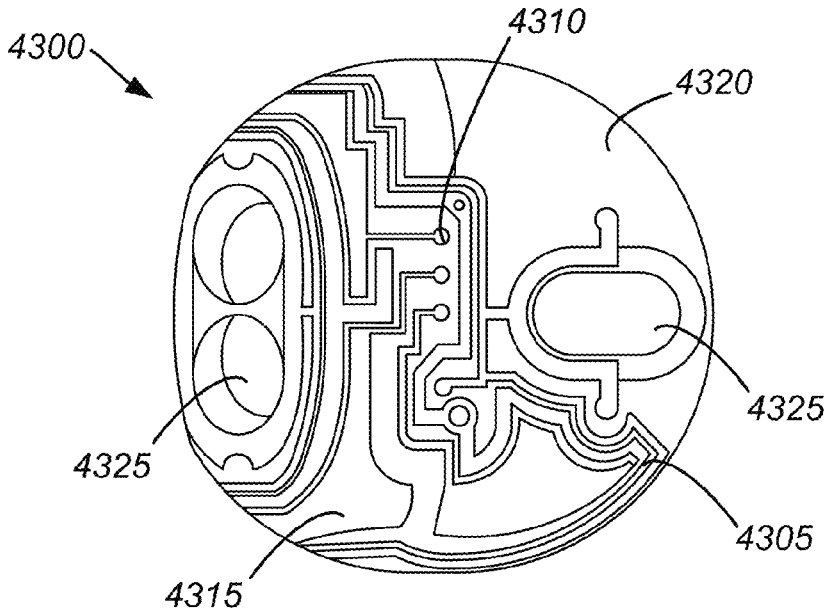
4300
4310
4320
4325
4325
4305
4315

FIG. 43

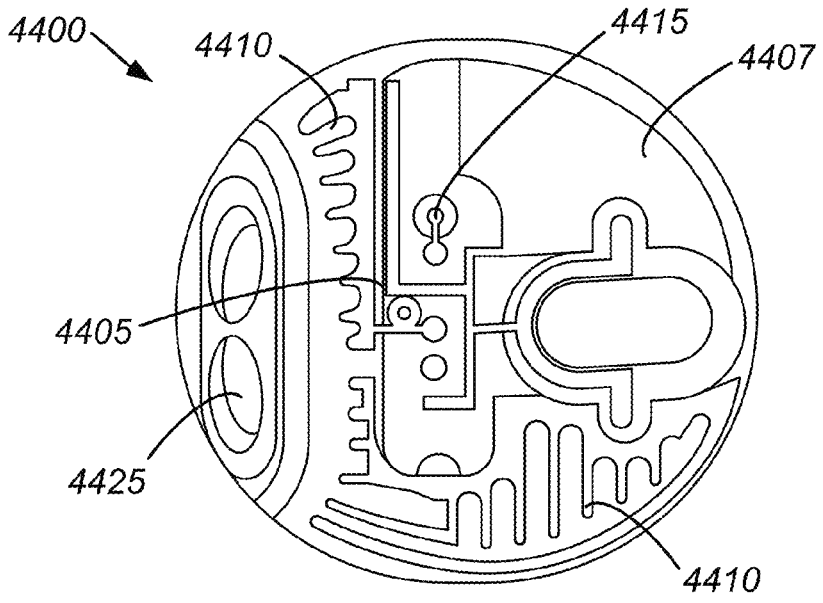
4400
4410
4415
4407
4405
4425
4410

FIG. 44

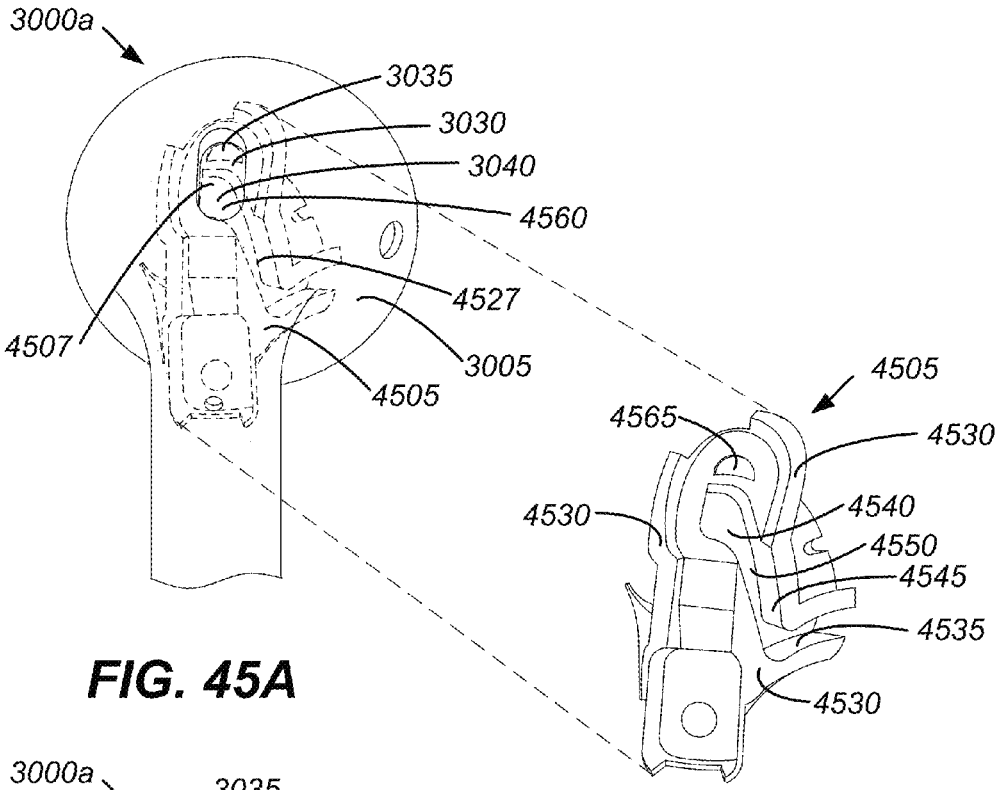

FIG. 45A

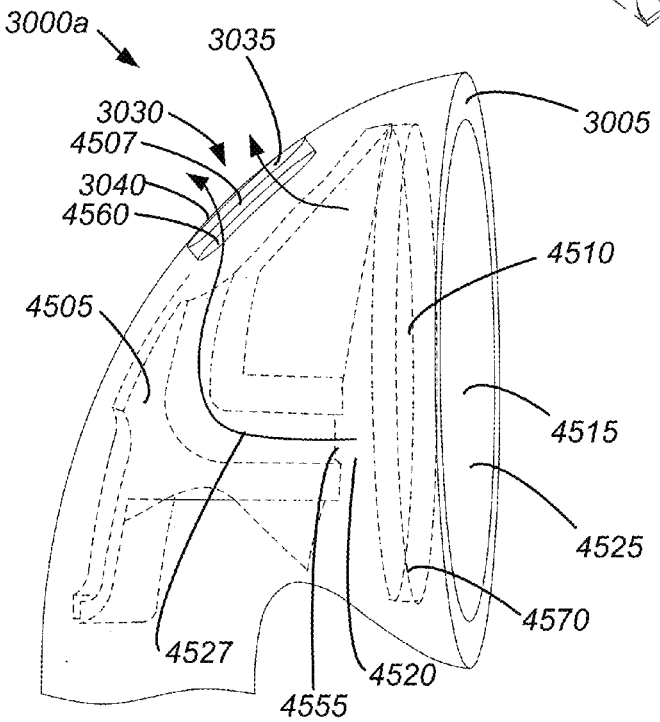

FIG. 45B

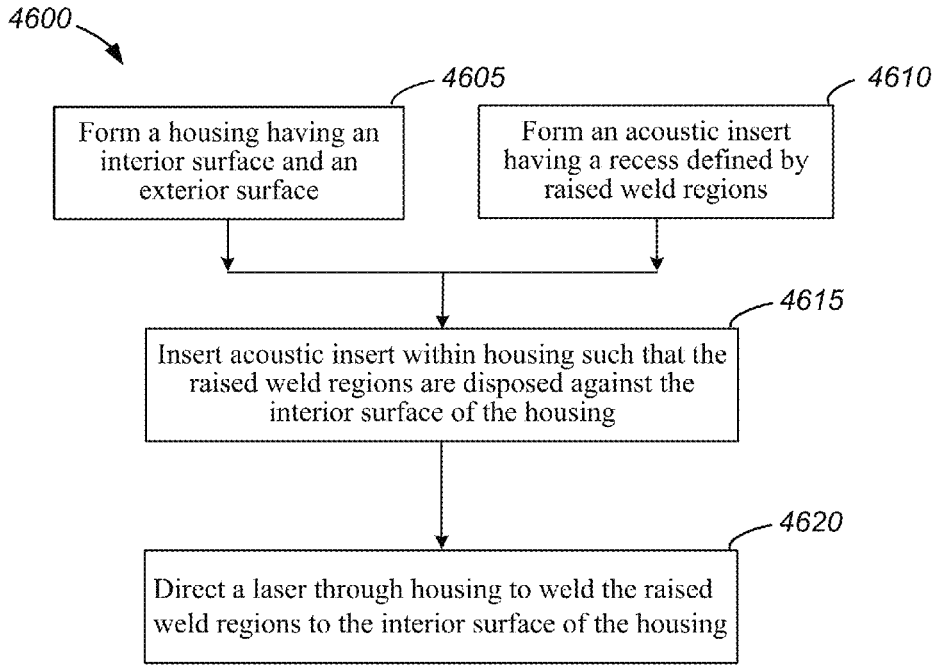
4600
4605
Form a housing having an interior surface and an exterior surface
4610
Form an acoustic insert having a recess defined by raised weld regions
4615
Insert acoustic insert within housing such that the raised weld regions are disposed against the interior surface of the housing
4620
Direct a laser through housing to weld the raised weld regions to the interior surface of the housing

FIG. 46

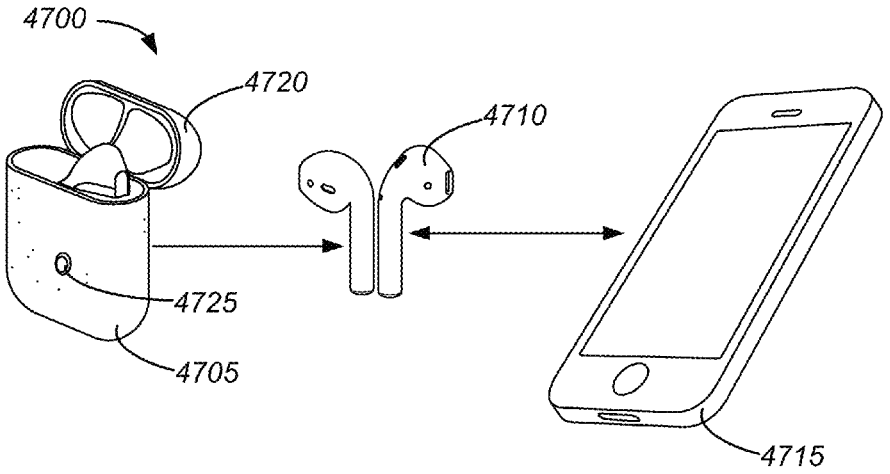
4700
4720
4710
4725
4705
4715

FIG. 47

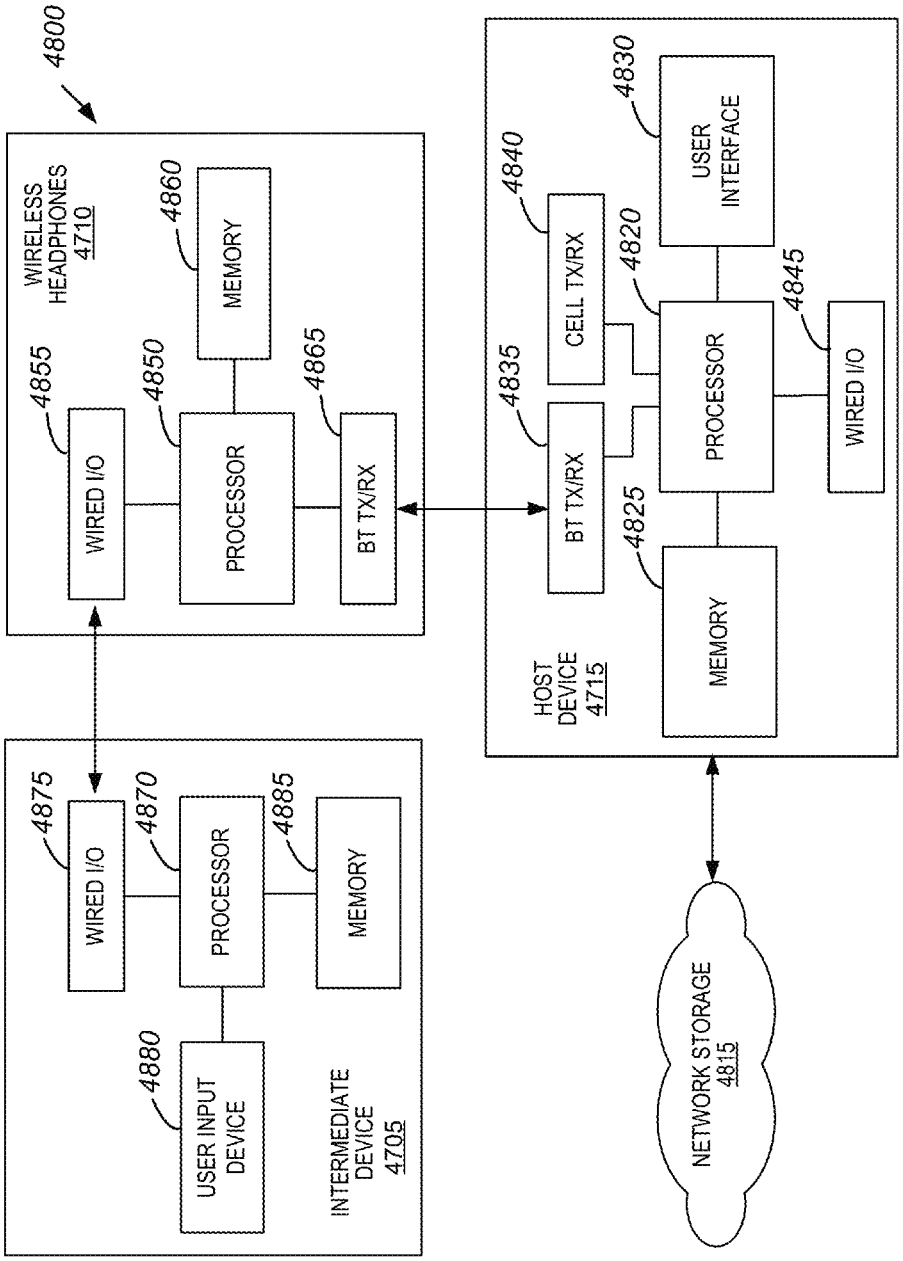
4800
WIRELESS HEADPHONES 4710
4855
WIRED I/O
4850
PROCESSOR
4860
MEMORY
4865
BT TX/RX
4835
BT TX/RX
4840
CELL TX/RX
4820
PROCESSOR
4830
USER INTERFACE
4845
WIRED I/O
4825
MEMORY
HOST DEVICE 4715
4875
WIRED I/O
4870
PROCESSOR
4885
MEMORY
4880
USER INPUT DEVICE
INTERMEDIATE DEVICE 4705
NETWORK STORAGE 4815

FIG. 48

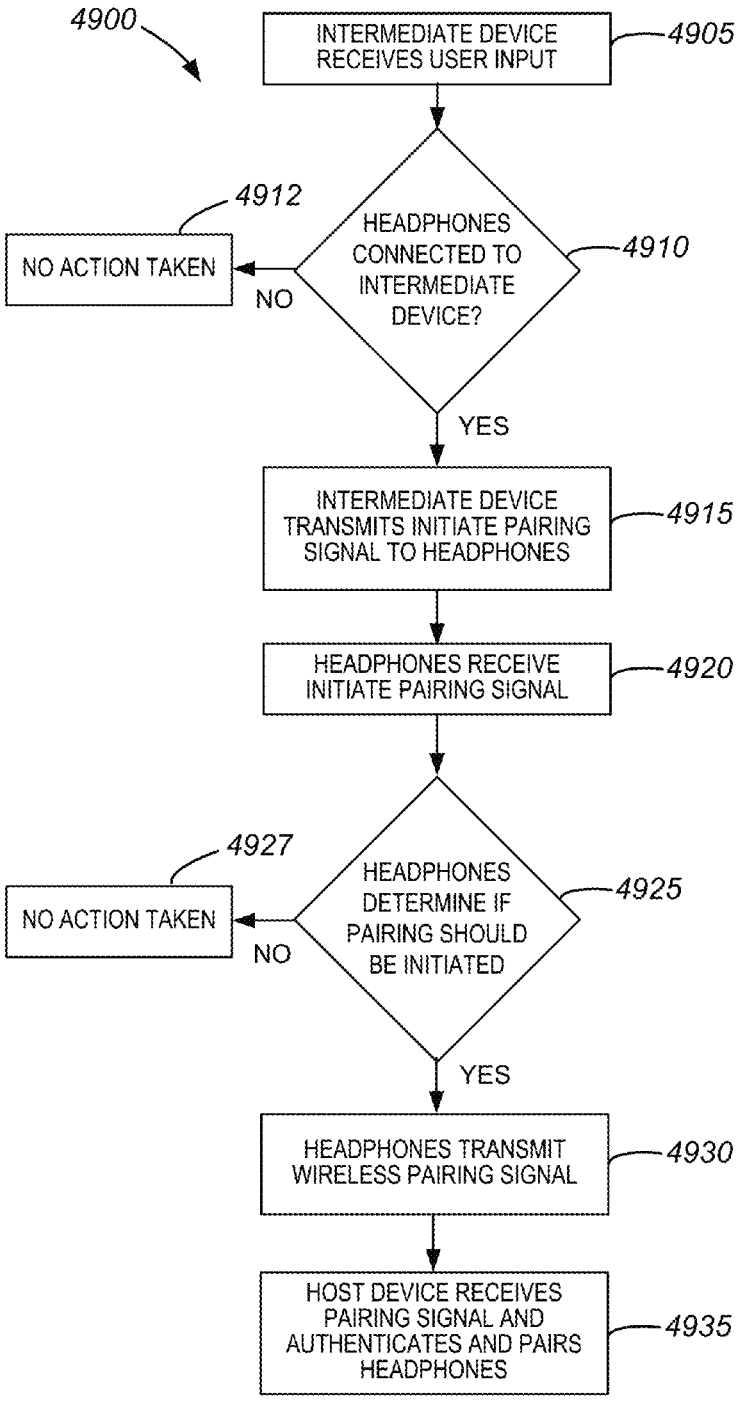
4900
INTERMEDIATE DEVICE RECEIVES USER INPUT
4905
HEADPHONES CONNECTED TO INTERMEDIATE DEVICE?
4910
NO
NO ACTION TAKEN
4912
YES
INTERMEDIATE DEVICE TRANSMITS INITIATE PAIRING SIGNAL TO HEADPHONES
4915
HEADPHONES RECEIVE INITIATE PAIRING SIGNAL
4920
HEADPHONES DETERMINE IF PAIRING SHOULD BE INITIATED
4925
NO
NO ACTION TAKEN
4927
YES
HEADPHONES TRANSMIT WIRELESS PAIRING SIGNAL
4930
HOST DEVICE RECEIVES PAIRING SIGNAL AND AUTHENTICATES AND PAIRS HEADPHONES
4935

FIG. 49

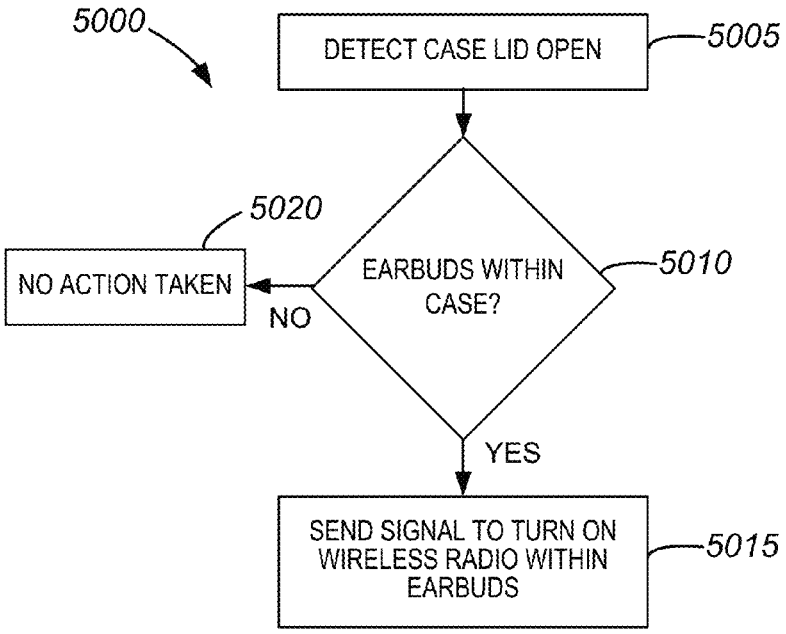
5000
DETECT CASE LID OPEN
5005
EARBUDS WITHIN CASE?
5010
NO
5020
NO ACTION TAKEN
YES
SEND SIGNAL TO TURN ON WIRELESS RADIO WITHIN EARBUDS
5015

FIG. 50

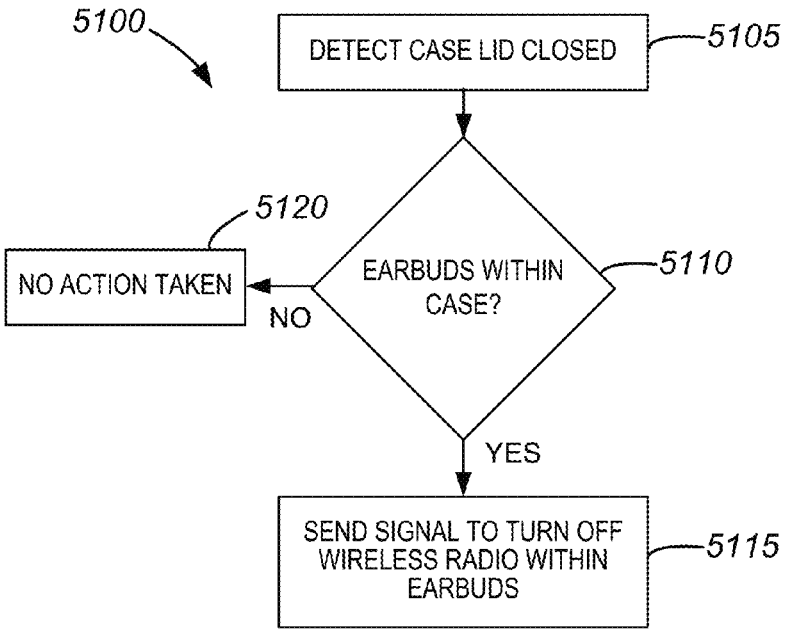
5100
DETECT CASE LID CLOSED
5105
EARBUDS WITHIN CASE?
5110
NO
5120
NO ACTION TAKEN
YES
SEND SIGNAL TO TURN OFF WIRELESS RADIO WITHIN EARBUDS
5115

FIG. 51

WATERPROOF RECEPTACLE CONNECTOR

CROSS REFERENCE TO RELATED APPLICATIONS

This application claims priority to U.S. provisional patent application Ser. No. 62/235,205, for "EARBUD CASE WITH CHARGING SYSTEM" filed on Sep. 30, 2015, to U.S. provisional patent application Ser. No. 62/235,213, for "CASE WITH MAGNETIC OVER-CENTER MECHANISM" filed on Sep. 30, 2015, to U.S. provisional patent application Ser. No. 62/235,219, for "MAGNETIC RETENTION OF EARBUD WITHIN CAVITY" filed on Sep. 30, 2015, to U.S. provisional patent application Ser. No. 62/235,226, for "CASE WITH INDUCTIVE CHARGING SYSTEM" filed on Sep. 30, 2015 and to U.S. provisional patent application Ser. No. 62/384,114, for "CASE FOR CHARGING AND RETAINING PORTABLE LISTENING DEVICES" filed on Sep. 6, 2016, each of which is hereby incorporated by reference in its entirety for all purposes.

This application is related to the following commonly assigned U.S. nonprovisional patent applications:

U.S. nonprovisional patent application Ser. No. 15/273,671, Filed, Sep. 22, 2016, "EARBUD CASE WITH CHARGING SYSTEM"; U.S. nonprovisional patent application Ser. No. 15/273,675, Filed, Sep. 22, 2016 "CASE WITH MAGNETIC OVER-CENTER MECHANISM; U.S. nonprovisional patent application Ser. No. 15/273,677, Filed, Sep. 22, 2016, "EARBUD CASE WITH WIRELESS RADIO SHUTDOWN FEATURE"; U.S. nonprovisional patent application Ser. No. 15/273,683, Filed, Sep. 22, 2016 "EARBUDS WITH ACOUSTIC INSERT"; U.S. nonprovisional patent application Ser. No. 15/273,685, Filed, Sep. 22, 2016 "WIRELESS PAIRING OF EARBUDS AND CASE"; U.S. nonprovisional patent application Ser. No. 15/273,687, Filed, Sep. 22, 2016 "EARBUD CASE WITH RECEPTACLE CONNECTOR FOR EARBUDS"; U.S. nonprovisional patent application Ser. No. 15/273,690, Filed, Sep. 22, 2016 "WIRELESS EARBUDS WITH ELECTRONIC CONTACTS"; U.S. nonprovisional patent application Ser. No. 15/273,691, Filed, Sep. 22, 2016 "MAGNETIC RETENTION OF EARBUD WITHIN CAVITY"; U.S. nonprovisional patent application Ser. No. 15/273,693, Filed, Sep. 22, 2016 "CASE WITH INDUCTIVE CHARGING SYSTEM TO CHARGE A PORTABLE DEVICE"; U.S. nonprovisional patent application Ser. No. 15/273,696, Filed, Sep. 22, 2016 "EARBUDS WITH CAPACITIVE TOUCH SENSOR"; U.S. nonprovisional patent application Ser. No. 15/273,698, Filed, Sep. 22, 2016 "CASE WITH TORSION SPRING OVER-CENTER MECHANISM"; U.S. nonprovisional patent application Ser. No. 15/275,364, Filed Sep. 24, 2016 "EARBUD CASE WITH CHARGING SYSTEM"; U.S. nonprovisional patent application Ser. No. 15/275,366, Filed Sep. 24, 2016 "WIRELESS PAIRING OF EARBUDS AND CASE"; each of which is hereby incorporated by reference in its entirety for all purposes.

BACKGROUND

The described embodiments relate generally to portable listening devices such as earbuds and other types of headphones, and to cases for storing and charging such devices.

Portable listening devices can be used with a wide variety of electronic devices such as portable media players, smart phones, tablet computers, laptop computers, stereo systems and other types of devices. Portable listening devices have historically included one or more small speakers configured

to be place on, in, or near a user's ear, structural components that hold the speakers in place, and a cable that electrically connects the portable listening device to an audio source. Other portable listening devices can be wireless devices that do not include a cable and instead, wirelessly receive a stream of audio data from a wireless audio source.

While wireless portable listening devices have many advantages over wired devices, they also have some potential drawbacks. For example, wireless portable listening devices, typically require one or more batteries, such as a rechargeable battery, that provides power to the wireless communication circuitry and other components of the device. Single use batteries need to be replaced when their charge is depleted while rechargeable batteries need to be periodically recharged. Also, if the portable wireless listening device is a pair of wireless earbuds, the earbuds can be relatively small and easy to lose when not in use. Further, achieving high-end acoustic performance from the relatively small earbuds can challenge manufacturers due to the reduced amount of space available within each earbud.

SUMMARY

Some embodiments of the present disclosure relate to a case that can store and charge a portable listening device, such as a pair of wireless earbuds or other types of headphones. In various embodiments the case can include one or more features that can improve the user experience associated with using the case and the portable listening device. For example, some embodiments of the disclosure pertain to a case for wireless earbuds that includes a detector that detects if the earbuds are stored in the case along with a detector that detects if a lid of the case is opened or closed. Circuitry within the case can use information from the detectors to improve the user experience associated with charging the earbuds, pairing the earbuds to a host device, such as a portable media player or other source of an audio signal, and/or turning one or more features of the earbuds off to extend the life of any battery used to power the earbuds.

In other embodiments, a case for a portable listening device can include a lid that, when closed, encloses the listening device within the case and when open exposes the stored listening device so that a user can remove the listening device from the case. The lid can be pivotably coupled to a housing of the case with a bi-stable hinge with an over center configuration where the lid is in a stable position when it is either closed or fully open and is unstable at positions in between such that the lid tends to move to the open or closed position. The bi-stable operation of the lid can provide a positive user experience in opening and closing the lid as the lid moves easily, and with minimal effort, between closed and fully open positions. In other embodiments a case for a portable listening device can be configured to magnetically attract and retain the listening device within the case. Still other embodiments facilitate the pairing of a wireless portable listening device with a host device and/or automatically turn OFF the wireless radio of a wireless portable listening device when the device is stored and fully enclosed within the case and automatically turn ON the wireless radio upon opening the case lid. Various embodiments of the disclosure can include all of the above features together or just some of the features.

In some embodiments a case for transporting and charging a portable listening device that includes a rechargeable battery and a power contact is provided. The portable listening device case can include a housing configured to receive the portable listening device; a lid attached to the

housing and operable between a closed position where the lid conceals the listening device within the case and an open position where the lid is displaced from the housing such that a user can remove the listening device from the case; a detector configured to generate a detect signal when the listening device is placed in the housing; and charging circuitry configured to initiate charging of the rechargeable battery in response to receiving the detect signal.

In some embodiments a case for a pair of earbuds includes a housing having one or more cavities configured to receive the pair of earbuds; a lid attached to the housing and operable between a closed position where the lid is aligned over the one or more cavities and an open position where the lid is displaced from the one or more cavities; and a charging system. The charging system can include a case battery; an earbud detector configured to detect when an earbud is placed in the one or more cavities; and charging circuitry configured to initiate charging of the earbud when the earbud detector detects that the earbud is inserted into the one or more cavities. The one or more cavities can include a first cavity configured to receive a first earbud in the pair of earbuds and a second cavity sized and shaped to receive a second earbud in the pair of earbuds. The earbud detector can include a first earbud sensor configured to detect when the first earbud is placed in first cavity and a second earbud sensor configured to detect when the second earbud is placed in the second cavity.

In some embodiments a case for a pair of earbuds, each earbud having an ear interface portion, a stem, an earbud battery and a wireless radio is provided. The case can include: a housing having a first cavity configured to receive a first earbud in the pair of earbuds and a second cavity configured to receive a second earbud in the pair of earbuds; a lid attached to the housing and operable between a closed position where the lid conceals the earbuds within the case and an open position that allows a user to remove the earbuds from the case; and a charging system. The charging system can include a case battery; a first connector configured to interface to a power source for charging the case battery; a second connector configured to couple to each of the first and second earbuds, the second connector having at least one contact positioned in the first cavity and at least one contact positioned in the second cavity; an earbud detector configured to detect when an earbud is placed in either of the first or second cavities; and charging circuitry configured to initiate charging of an earbud battery when the earbud detector detects insertion of an earbud within either the first cavity or the second cavity and configured to cease charging the earbud when the earbud detector detects an earbud is removed from the cavity.

Some embodiments of the disclosure pertain to a case that can be used to store a portable listening device or another type of electronic device. The case can include: a housing having a cavity to receive the electronic device and a receiving opening that communicates with the receiving opening; a lid secured to housing with a pivotable joint, the lid being operable between an open position in which the receiving opening is exposed and a closed position in which the lid covers the receiving opening; and a plurality of magnetic elements disposed within the housing and the lid, the plurality of magnetic elements configured to create an over center position for the lid such that the lid resists rotating from the open position to the closed position until the lid is moved past the over center position when the lid is then attracted to the closed position.

In some embodiments a case for a portable listening device is provided. The case can include: a housing having a cavity to receive the listening device; a lid attached to the housing with a pivotable joint allowing the lid to rotate between a closed position where the lid is aligned over the cavity and an open position where the lid is angularly displaced allowing the listening device to be removed from the cavity; and a plurality of magnetic elements disposed within the housing and the lid, the plurality of magnetic elements configured to secure the lid in the closed position and to resist the lid moving from the open position to the closed position. The plurality of magnetic elements can include a first pair of magnetic elements configured to repel each other and a second pair of magnetic elements configured to attract each other. The first pair of magnetic elements can include a first magnet positioned in the lid adjacent to the pivotable joint and a second magnet positioned in the housing adjacent to the pivotable joint and oriented to repel the first magnet. The second pair of magnetic elements can include a first magnetic element positioned in the lid opposite the pivotable joint and a second magnetic element positioned in a housing wall opposite the pivotable joint and oriented to attract the first magnetic element. In some instances both of the magnetic elements of the second pair of magnetic elements are magnets. In some instances one of the magnetic elements of the second pair of magnetic elements is a magnet and the other magnetic element is a magnetic material.

In some embodiments, a case for a portable listening device includes: a housing having a cavity to receive the listening device and a receiving opening that communicates with the cavity; a lid secured to housing with a pivotable joint, the lid being operable between an open position in which the receiving opening is exposed and a closed position in which the lid covers the receiving opening; a first magnetic element located in the lid proximate the pivotable joint and oriented to repel a second magnetic element located in the housing proximate the pivotable joint; and a third magnetic element located in the lid at a distal end of the lid opposite the pivotable joint and oriented to attract a fourth magnetic element located in the housing at a distal end of the housing opposite the pivotable joint; wherein the first, second, third and fourth magnetic elements cooperate to define an over center position for the lid disposed between the open position and the closed position such that that the lid resists rotating from the open position to the closed position until the lid is moved past the over center position where the lid is impelled to the closed position.

Some embodiments pertain to a case for a portable listening device having a wireless radio where the case includes: a housing having a cavity configured to receive the portable listening device; a lid attached to the housing and operable between a closed position where the lid conceals the portable listening device within the case and an open position where the lid is displaced from the housing such that a user can remove the portable listening device from the case; a lid sensor to detect if the lid is in the closed position or the open position; and circuitry configured to turn ON the wireless radio when the lid sensor detects that the lid is moved from the closed position to the open position. The lid sensor can generate an open signal when the lid moves from a closed position to an open position, and the circuitry can be configured to turn ON the wireless radio in response to the open signal. In some instances the case can further include an electrical connector having a first contact positioned within the cavity to electrically connect to a second contact on the portable listening device when the portable listening device is received within the cavity, and the case the circuitry can turn ON the wireless radio in the portable

listening device by sending an instruction to the portable listening device over the first contact.

In some embodiments a case for a portable listening device having a wireless radio includes: a housing having a cavity configured to receive the portable listening device; a lid attached to the housing and operable between a closed position where the lid conceals the portable listening device within the case and an open position where the lid is displaced from the housing such that a user can remove the portable listening device from the case; a device detector configured to detect when the portable listening device is placed in the cavity; a lid sensor to detect if the lid is in the closed position or the open position; and circuitry configured to turn OFF the wireless radio when the lid sensor detects that the lid is moved from the open position to the closed position. The lid sensor can generate a close signal when the lid moves from an open position to a closed position, and the circuitry can be configured to turn OFF the wireless radio in response to the close signal. In some instances the case can further include an electrical connector having a first contact positioned within the cavity to electrically connect to a second contact on the portable listening device when the portable listening device is received within the cavity, and the case the circuitry can turn OFF the wireless radio in the portable listening device by sending an instruction to the portable listening device over the first contact.

In some embodiments a case for a pair of earbuds can include: a housing having a first cavity configured to receive a first earbud in the pair of earbuds and a second cavity configured to receive a second earbud in the pair of earbuds; a lid attached to the housing and operable between a closed position where the lid conceals the earbuds within the case and an open position that allows a user to remove the earbuds from the case; a lid sensor to detect if the lid is in the closed position or the open position; a case battery; circuitry configured charge an earbud battery within each earbud; and circuitry configured to turn ON a wireless radio in an earbud when the lid sensor detects that the lid is moved from the closed position to the open position and to turn OFF the wireless radio in an earbud when the lid sensor detects that the lid is moved from the open position to the closed position. In some embodiments, the lid sensor can generate an open signal when the lid moves from a closed position to an open position and generate an close signal when the lid moves from an open to a closed position, and the circuitry included within the case can be configured to turn ON the wireless radio in response to the open signal and to turn OFF the wireless radio in response to the close signal. In various embodiments the case can further include a device detector that detects when a portable listening device is received within the cavity, and circuitry within the case can be configured to only send instructions to the portable listening device to turn the wireless radio ON or OFF if the device detector detects that the portable listening device is received within the cavity. In various examples, the lid sensor can be a Hall-effect sensor.

Some embodiments of the disclosure pertain to an earbud that includes: a housing having a non-occluding ear portion; a directional sound port disposed in the non-occluding ear portion; a driver assembly positioned within the housing having a front volume disposed in front of the driver assembly and a back volume disposed behind the driver assembly; and an acoustic insert positioned within the housing behind the driver assembly and attached to an interior surface of the housing such that the acoustic insert and the housing form a bass channel that is routed from the back volume to a multiport vent within the housing. The acoustic insert can include a recess defined by raised weld regions that are acoustically bonded to the interior surface of the housing. In some instances the recess within the acoustic insert forms three walls of the bass channel and the housing forms a fourth wall of the bass channel. The acoustic insert can further include an aperture that couples the front volume to the multiport vent, and the bass channel and the aperture can be coupled to a multiport chamber that is vented through the multiport vent. In some examples the acoustic insert is formed from a carbon doped plastic that absorbs laser energy. In some examples, the earbud housing can be made from Acrylonitrile butadiene styrene (ABS) with a titanium dioxide pigment.]

An earbud according to some embodiments can include: a housing having an ear portion coupled to a stem; a cavity formed within the ear portion; a driver assembly positioned within the cavity and defining a front volume disposed in front of the driver assembly and a back volume disposed behind the driver assembly; an acoustic insert positioned within the cavity behind the driver assembly and attached to an interior surface of the housing; and a bass channel formed by the acoustic insert and the housing that is routed from the back volume to an external environment via a vent. The acoustic insert can include a recess defined by raised weld regions that are bonded to the interior surface of the housing. The acoustic insert can further include an aperture that couples the front volume to the external environment.

In some embodiments a method of forming an earbud is provided. The method can include: forming a housing having an interior surface and an exterior surface; forming an acoustic insert such that it has a recess defined by raised weld regions; inserting the acoustic insert within the housing such that the raised weld regions are disposed against the interior surface of the housing; and directing a laser through the housing such that it impinges the raised weld regions of the acoustic insert and welds the raised weld regions to the interior surface of the housing. In some instances the housing can be formed from a plastic that is substantially transparent to a wavelength of the laser, and the acoustic insert can be formed from a carbon doped plastic that absorbs laser energy.

In some embodiments a case for a pair of wireless earbuds having a wireless radio can include: a housing having a first cavity configured to receive a first earbud in the pair of earbuds and a second cavity configured to receive a second earbud in the pair of earbuds; a lid attached to the housing and operable between a closed position where the lid conceals the earbuds within the case and an open position that allows a user to remove the earbuds from the case; a connector configured to couple to each of the first and second earbuds, the connector having a first contact positioned in the first cavity and a second contact positioned in the second cavity; a lid sensor configured to generate a detect signal when the lid is moved from a closed position to an open position; and circuitry coupled to the first or second contacts and configured to, in response to the detect signal, send one or more signals to the pair of wireless earbuds to turn ON the wireless radio and to initiate pairing of the pair of wireless earbuds to an electronic device. The circuitry can include a processor operatively coupled to a computer-readable memory that stores instructions that can be executed by the processor to send the one or more signals. The connector can include a first power contact for the first earbud of the pair of wireless earbuds and a second power contact for the second earbud of the pair of wireless earbuds, and each of the first and second power contacts can be

configured to transmit both power and data to the first earbud and the second earbud, respectively.

In some embodiments a case for a portable listening device that includes a wireless radio can include: a housing having a receiving area for the portable listening device; a lid attached to the housing and operable between a closed position where the lid conceals the portable listening device within the case and an open position that allows a user to remove the portable listening device from the receiving area; an electrical connector positioned within the receiving area, the electrical connector having one or more case electrical contacts that electrically connect to the one or more device electrical contacts when the portable listening device is received in the receiving area, an input device configured to generate a signal in response to a user-generated action; and a processor coupled to the input device and the electrical connector. The processor can be configured to receive the signal from the input device and, in response, send an instruction to the portable listening device through the electrical connector to initiate wireless pairing of the portable listening device to a host electronic device. In some instances the processor can be further configured to receive send an instruction to the portable listening device through the electrical connector to turn ON its wireless radio in response to receiving the signal from the input device prior to sending an instruction to the portable listening device to initiate wireless pairing of the portable listening device to the host electronic device.

In various embodiments the portable listening device can be a pair (first and second) of wireless earbuds and the electrical connector can include a first contact for transmitting power to the first wireless earbud and a second contact for transmitting power to the second wireless earbud. Circuitry positioned within the housing can be configured to transmit data signals between the case and the first and second wireless earbuds over the first and second contacts, respectively, that are also used to charge the earbuds. The input device can include one or both of a lid sensor that is activated by a user moving the lid from the closed position to the open position and a depressible button on the case. In some instances where two or more different input devices are included, such as a lid sensor and a depressible button, the different input devices can generate different signals that are distinguishable by the processor and can be used by the processor to initiate different pairing procedures. The case can also include a rechargeable battery that is coupled to one or more case electrical contacts within the case that are configured to provide electrical charge to the first and second wireless earbuds to recharge a batteries within the earbuds.

In some embodiments a method of wirelessly pairing a first electronic device to a second electronic device is provided. The method can include: receiving an input from a user at a third electronic device, different than the first and second devices. In response to receiving the input, the third electronic device can communicate a user input signal to the first electronic device through a wired connection between the third and the first electronic devices. In response to the first electronic device receiving the user input signal, the first electronic device can broadcast a wireless pairing request, and in response to receiving the wireless pairing request, the second electronic device can wirelessly pair with the first device. In some instances, the first electronic device can be a wireless headphone set, the second electronic device can be a mobile electronic device and the third electronic device can be a case for the portable listening device. Also, in some embodiments where the third electronic device is a case for a portable listening device, the input from the user can be opening a lid of a case.

In some embodiments a case for a pair of earbuds is provided where each earbud has an ear portion and a stem portion with an electrical connector disposed at a distal end of the stem portion. The case can include: a housing; an insert positioned within the housing, the insert having first and second cavities sized and shaped to accommodate first and second earbuds, respectively, each of the first and second cavities having a receiving opening to receive an earbud into the cavity and a contact opening opposite the receiving opening; and a contact assembly attached to the insert, the contact assembly comprising a first pair of electrical contacts extending into the first cavity and a second pair of electrical contacts extending into the second cavity, the first and second pairs of electrical contacts configured to make electrical contact with the electrical connector disposed at the distal end of the first and second earbuds, respectively, through the contact opening. The insert can include first and second shells joined together, the first shell including the first cavity and the second shell including the second cavity. The case can further include a collar adhered to a top of the contact assembly and to a periphery of a distal end of each of the first and the second shells. The first and second pairs of electrical contacts can each have arcuate portions that are positioned by a contact carrier to couple to the electrical connector disposed at the distal end of the first and second earbuds.

In some embodiments an electrical connector assembly for an earbud charging system is provided. The electrical connector assembly can be configured to receive an earbud having an ear portion and a stem portion with an earbud connector disposed at a distal end of the stem portion. The electrical connector assembly can include: a shell having a receiving opening to receive the earbud in a stem-first orientation, a distal end opposite the receiving opening, and a contact opening proximate the distal end that opens to the receiving opening; a contact carrier formed from a dielectric material and coupled to the distal end of the shell, the contact carrier having a cavity sized to receive the distal end of the shell and a pair of contact receiving slots; and a pair of deflectable electrical contacts disposed within the pair of contact receiving slots, each deflectable electrical contact having a contact portion that extends through the contact opening of the shell.

In some embodiments a case for a pair of earbuds is provided where each earbud has an ear interface portion and a stem portion with an electrical connector disposed at a distal end of the stem portion. The case can include: a housing; an insert positioned within the housing, the insert having first and second earbud receiving cavities sized and shaped to accommodate first and second earbuds, respectively, each of the first and second receiving cavities having a receiving opening to receive an earbud into the receiving cavity in a stem-first orientation, a contact opening at an opposite end of the receiving opening; a contact carrier formed from a dielectric material and coupled to the insert, the contact carrier having first and second pairs of contact receiving slots disposed at a contact interface region and a debris recess configured to capture debris positioned between the first pair of contact receiving slots and a second debris recess disposed below the contact interface region and sized and shaped to capture debris; a first pair of deflectable electrical contacts disposed within first pair of contact receiving slots, each of the first pair of deflectable electrical contacts having a contact portion that extends into

the first receiving cavity in the contact interface region; and a second pair of deflectable electrical contacts disposed within second pair of contact receiving slots, each of the second pair of deflectable electrical contacts having a contact portion that extends into the second receiving cavity in the contact interface region. In some instance the debris recess can include a first debris recess positioned between the first pair of contact receiving slots and a second debris recess positioned between the second pair of contact receiving slots. Each of the first and second earbud receiving cavities can include an elongated tube portion sized and shaped to accommodate the stem portion of an earbud and a larger earbud receiving opening sized and shaped to at least partially accommodate the ear interface portion. The contact portion of each of the deflectable electrical contacts can have a curved profile.

In some embodiments a wireless earbud is provided that includes: a housing having a stem portion aligned with a longitudinal axis, the stem portion including first and second ends; a speaker assembly having a driver unit and a directional sound port proximate the first end and offset from the longitudinal axis, wherein the driver unit is aligned to emit sound from the directional sound port and comprises a magnet, a voice coil, and a diaphragm; a rechargeable battery disposed in the housing; and first and second external contacts exposed at an external surface at the second end of the stem portion and electrically coupled to provide power to the rechargeable battery. The first and second external contacts can each have a partial annular shape and can be spaced in an oppositional and symmetrical relationship with each other. In some instances an outer perimeter of the first and second external contacts is flush with an exterior surface of the stem portion.

In some embodiments a wireless earbud includes: a housing having a stem portion aligned with a longitudinal axis, the stem portion including first and second ends; a speaker assembly having a driver unit and a directional sound port proximate the first end and offset from the longitudinal axis, wherein the driver unit is aligned to emit sound from the directional sound port and comprises a magnet, a voice coil, and a diaphragm; a rechargeable battery disposed in the housing; a first semicircular contact disposed at an external surface at the second end of the stem portion and electrically coupled to the rechargeable battery; and a second semicircular contact disposed at an external surface at the second end of the stem portion, the first and second partial annular contacts spaced in an oppositional and symmetrical relationship with each other.

In some embodiments a wireless earbud includes: a housing; a rechargeable battery disposed in the housing; a speaker assembly including a driver unit and a directional sound port, wherein the driver unit is aligned to emit sound from the directional sound port and comprises a magnet, a voice coil, and a diaphragm; and a plurality of contacts exposed at an external surface of the housing, each contact in the plurality of contacts including a conductive base having a binary metal alloy plated layer at an outer surface of each contact, the binary metal alloy plated layer comprising rhodium and ruthenium. In some instances, the weight percentage of rhodium is at least 85 percent, with the remainder in ruthenium.

Some embodiments of the disclosure pertain to a case for an earbud having one or more earbud magnetic components. The case can include: a receiving cavity sized and shaped to accept the earbud; one or more housing magnetic components disposed within the case and positioned and configured to magnetically attract and magnetically secure the earbud into the receiving cavity and the second earbud into the second receiving cavity; and a lid operable between an open position in which the receiving cavity is exposed and a closed position in which the lid covers the receiving cavity. The case can be configured to store a pair of earbuds and the receiving cavity includes a first receiving cavity sized and shaped to accept a first earbud in the pair of earbuds, and a second receiving cavity sized and shaped to accept a second earbud in the pair of earbuds. In some embodiments the one or more housing magnetic components can include a first plurality of magnetic components disposed around the first receiving cavity and configured to magnetically attract and magnetically retain the first earbud within the first receiving cavity, and a second plurality of magnetic components disposed around the second receiving cavity and configured to magnetically attract and magnetically retain the second earbud within the second receiving cavity.

In some examples the first plurality of magnetic components can include a first magnetic component positioned and configured to magnetically attract a speaker magnet in the first earbud and the second plurality of magnetic components can include a second magnetic component positioned and configured to magnetically attract a speaker magnet in the second earbud. In other examples the first plurality of magnetic components can include a first magnetic component positioned and configured to magnetically attract a magnetic plate disposed in an ear portion of the first earbud and the second plurality of magnetic components can include a second magnetic component positioned and configured to magnetically attract a magnetic plate disposed in an ear portion of the second earbud.

In some instances the first plurality of magnetic components can includes one or more magnetic components disposed around a portion of the first receiving cavity that accepts an ear interface portion of the first earbud and the second plurality of magnetic components can include one or more magnetic components disposed around a portion of the second receiving cavity that accepts an ear interface portion of the second earbud. In some instances the first plurality of magnetic components can include a first housing magnetic component arranged to attract a speaker magnet in the first earbud, and a second housing magnetic component arranged to attract a magnetic plate disposed within an ear portion of the first earbud; and the second plurality of magnetic components can include a third housing magnetic component arranged to attract a speaker magnet in the second earbud, and a fourth housing magnetic component arranged to attract a magnetic plate disposed within an ear portion of the second earbud. In some instances the first plurality of magnetic components includes a first set of magnetic components that form a first Halbach array to increase attractive forces for the first earbud and the second plurality of magnetic components includes a second set of magnetic components that form a second Halbach array to increase attractive forces for the second earbud. The first and second Halbach arrays can be configured to attract the first and the second earbuds into respective cavities and magnetically retain them within the cavities until they are removed by a user.

In some embodiments an earbud includes: a housing formed to fit at least partially within a user's ear; a directional sound port formed within the housing; a speaker assembly disposed within the housing and including a driver unit comprising a first magnet, the driver unit aligned to emit sound from the directional sound port; a magnetic retention component, separate from the speaker assembly, and positioned in the housing. The housing can have an ear portion and a stem portion, and the magnetic retention component

can be disposed within the ear portion. The driver unit can include a diaphragm and a voice coil, and the first magnet can be operatively coupled to the voice coil to move the diaphragm in response to electrical signals and the magnetic retention component is not operatively coupled to the voice coil.

In some embodiments a wireless listening system is provided that includes a pair of wireless earbuds and a storage case for the pair of earbuds. Each wireless earbud can include: a housing formed to fit at least partially within a user's ear; a directional sound port formed within the housing; a speaker assembly disposed within the housing and including a driver unit comprising a first magnet, a diaphragm and a voice coil, and wherein the first magnet is operatively coupled to the voice coil to move the diaphragm in response to electrical signals, the driver unit aligned to emit sound from the directional sound port; and a magnetic retention component, separate from the speaker assembly, and positioned in the housing. The storage case can include: a first receiving cavity sized and shaped to accept a first earbud of the pair of earbuds; a second receiving cavity sized and shaped to accept a second earbud of the pair of earbuds; a plurality of housing magnetic components disposed within the case and positioned and configured to magnetically attract and magnetically secure the first earbud into the first receiving cavity and the second earbud into the second receiving cavity; and a lid operable between an open position in which the first and second receiving cavities are exposed and a closed position in which the lid covers the first and second receiving cavities. The plurality of housing magnetic components can include a first magnetic component positioned and configured to magnetically attract a speaker magnet in the first earbud and a second magnetic component positioned and configured to magnetically attract a speaker magnet in the second earbud. The plurality of housing magnetic components can further includes a third magnetic component positioned and configured to magnetically attract a magnetic plate disposed in an ear portion of the first earbud and a fourth magnetic component positioned and configured to magnetically attract a magnetic plate disposed in an ear portion of the second earbud.

In some embodiments a case for a portable listening device includes: a housing having one or more cavities configured to receive the portable listening device and an exterior charging surface; a lid attached to the housing and operable between a closed position where the lid is aligned over the one or more cavities and an open position where the lid is displaced from the one or more cavities; a battery; a first charging system configured to charge the portable listening device when positioned in the one or more cavities, and a second charging system including a transmitting coil positioned within the housing adjacent to the exterior charging surface, the transmitting coil configured to wirelessly transmit power to a power receiving coil of an electronic device positioned outside the housing adjacent to the exterior charging surface. In some embodiments the portable listening device can be a case for a pair of earbuds; the housing can include first and second cavities configured to receive first and second earbuds, respectively; and the first charging system can be configured to charge the first and second earbuds when the earbuds are positioned within the first and second cavities.

In some embodiments a case for a pair of earbuds is provided. Each earbud can include an ear interface portion, a stem, an earbud battery and a wireless radio. The case include: a housing having a first cavity configured to receive a first earbud in the pair of earbuds and a second cavity configured to receive a second earbud in the pair of earbuds; a lid operable between a closed position where the lid conceals the pair of earbuds within the case and an open position where the lid is displaced from the case such that a user can remove the earbuds from the case and first and second charging systems. The first charging system can include: a case battery; a wireless power receiving coil positioned within the housing, the wireless power receiving coil configured to wirelessly receive power from a wireless power source; a connector configured to couple to each of the first and second earbuds, the second connector having at least one contact positioned in the first cavity and at least one contact positioned in the second cavity; and charging circuitry operatively coupled to charge the case battery and provide power to the connector to charge the first and second earbuds from wireless power received over the wireless power receiving coil. The second charging system can include a transmitting coil positioned within the housing and configured to wirelessly transmit power to a power receiving coil of an auxiliary electronic device positioned adjacent the case. The case can further include an earbud detector configured to detect when an earbud is placed in either of the first or second cavities.

In some embodiments an electrical receptacle connector is disclosed that includes: a housing comprised of an electrically insulative polymer that extends between a receiving face and a rear face, the housing defining a cavity that communicates with an opening in the receiving face to receive a plug portion of a mating plug connector; a contact spacer positioned adjacent to the rear face; a gasket disposed between the rear face of the housing and the contact assembly; a plurality of contacts, each of the plurality of contacts having a tip positioned within the cavity, an anchor portion that anchors each contact to the contact spacer and a beam portion that connects the tip to the anchor portion; and a metallic bracket disposed around an outside surface of the housing.

In some other embodiments an electrical receptacle connector includes: a housing comprised of an electrically insulative polymer that extends between a receiving face and a rear face, the housing defining a cavity that communicates with a front opening in the receiving face to receive a plug portion of a mating plug connector and wherein the housing has a plurality of slots that form a portion of the cavity; a contact assembly including: (i) a contact spacer positioned adjacent to the rear face; (ii) a plurality of contacts, each of the plurality of contacts having a tip that extents into the cavity through one of the plurality of slots, an anchor portion coupled to the contact spacer, and a beam portion that connects the tip to the anchor portion; and (iii) a ground latch having first and second spring arms on opposing sides of the plurality of contacts; a gasket disposed between the rear face of the housing and the contact assembly; and a metallic bracket disposed around an outside surface of the housing and formed to secure the contact assembly to the housing.

Some embodiments pertain to an earbud including: a housing defining a cavity in which one or more electrical components of the earbud are housed, the housing having a touch sensitive region at an exterior surface of the housing and an interior surface within the cavity opposite the exterior surface; a capacitive sensor insert having a first surface with metallized circuitry formed thereon and positioned within the housing such that the first surface is adjacent the interior surface of the housing; an earbud processor disposed within the housing; and at least one conductor that electrically couples the capacitive sensor insert to the earbud processor.

The capacitive sensor insert can be formed to closely match a shape of the housing. In some instances the metallized circuitry forms at least one self-capacitance sensor in which, when touched by a user, loads self-capacitance circuitry that can be detected. In other instances the metallized circuitry includes row and column electrodes that form at least one mutual-capacitance sensor in which, when touched by a user, mutual coupling between row and column electrodes is altered and detected. The capacitive sensor insert is formed from a plastic that includes metallic particulates.

In some embodiments an earbud includes: a housing that defines an enclosed cavity in which one or more electrical components of the earbud are housed, the earbud housing having a touch sensitive region at an exterior curved surface of the housing and an interior curved surface within the enclosed cavity opposite the exterior curved surface; a directional sound port formed within the housing; a speaker assembly disposed within the enclosed cavity and including a driver unit comprising a magnet, the driver unit aligned to emit sound from the directional sound port; a capacitive sensor configured to sense a user's touch on the touch sensitive region, the capacitive sensor including a sensor insert positioned within the enclosed cavity and one or more acoustic apertures aligned with the directional sound port, the sensor insert having a first surface adjacent to and contoured to match the interior curved surface, the first surface including metallized circuitry formed thereon and at least partially surrounding the acoustic aperture; and a processor coupled to the capacitive sensor and disposed within the enclosed cavity.

In some embodiments a case for a listening device includes: a housing having a cavity to receive the listening device; a lid attached to the housing with a pivotable joint allowing the lid to rotate between a closed position where the lid is aligned over the cavity and an open position where the lid is angularly displaced allowing the listening device to be removed from the cavity, and an over center mechanism for the lid including an extension attached to the lid and disposed on an opposite side of the pivotable joint from the lid, wherein the extension is in contact with an arm that resists the lid rotating from the open position to the closed position until the lid is moved past an over center position when the lid is then impelled to the closed position.

In some embodiments a case for an electronic device includes: a housing having a cavity to receive the electronic device and a receiving opening that communicates with the receiving opening; a lid secured to housing with a first pivotable joint, the lid being operable between an open position in which the receiving opening is exposed and a closed position in which the lid covers the receiving opening; and a spring loaded over center mechanism for the lid. The spring-loaded over-center mechanism can include: an extension coupled to the lid and having a rounded contact portion at a distal end; an arm coupled to the housing by a second pivotable joint, the arm extending between a first end attached to the second pivotable joint and a second end, opposite the first end, the arm having first and second surfaces extending between the first and second ends; and a torsion spring formed around the second pivotable joint such that it applies a torque to the arm forcing the arm against the rounded portion of the extension.

To better understand the nature and advantages of the present disclosure, reference should be made to the following description and the accompanying figures. It is to be understood, however, that each of the figures is provided for the purpose of illustration only and is not intended as a definition of the limits of the scope of the present disclosure. Also, as a general rule, and unless it is evident to the contrary from the description, where elements in different figures use identical reference numbers, the elements are generally either identical or at least similar in function or purpose.

To better understand the nature and advantages of the present disclosure, reference should be made to the following description and the accompanying figures. It is to be understood, however, that each of the figures is provided for the purpose of illustration only and is not intended as a definition of the limits of the scope of the present disclosure. Also, as a general rule, and unless it is evident to the contrary from the description, where elements in different figures use identical reference numbers, the elements are generally either identical or at least similar in function or purpose.

BRIEF DESCRIPTION OF THE DRAWINGS

FIG. **1** is a side view of a case having a lid and configured to hold a pair of earbuds according to embodiments of the disclosure;

FIG. **2** is a system level diagram of a case with a charging system coupled to a pair of earbuds according to some embodiments of the disclosure;

FIG. **3** is a simplified cross-sectional view of the case shown in FIG. **1**;

FIG. **4**A is a partial cross-sectional view of an earbud connector according to an embodiment of the disclosure;

FIG. **4**B is a plan view of the earbud connector illustrated in FIG. **4**A;

FIG. **5**A is a partial cross-sectional view of another embodiment of an earbud connector according to the disclosure;

FIG. **5**B is a plan view of the earbud connector illustrated in FIG. **5**A;

FIG. **6**A is a partial cross-sectional view of another embodiment of an earbud connector according to the disclosure;

FIG. **6**B is a plan view of the earbud connector illustrated in FIG. **6**A;

FIG. **6**C is an isometric exploded view of a connector assembly for the earbud connector illustrated in FIG. **6**A;

FIG. **6**D is an isometric view of the assembled earbud connector illustrated in FIG. **6**A;

FIG. **7**A is an isometric exploded view of another embodiment of an earbud connector according to the disclosure;

FIG. **7**B is an isometric view of the assembled earbud connector illustrated in FIG. **7**A;

FIG. **8**A is a partial cross-sectional view of another embodiment of an earbud connector according to the disclosure;

FIG. **8**B is a plan view of the connector on the earbud illustrated in FIG. **8**A;

FIG. **8**C is an isometric exploded view of the earbud connector illustrated in FIG. **8**A;

FIGS. **9**A and **9**B are front and rear isometric views of one of the earbuds shown in FIG. **1**, respectively;

FIG. **10** is a top view of the case shown in FIG. **1** with the case lid removed;

FIG. **11** is a partial cross-sectional view of an earbud retained in a cavity within the case illustrated in FIG. **10** along section A-A;

FIG. **12** is a partial cross-sectional view of an earbud retained in a cavity within the case illustrated in FIG. **10** along section B-B;

FIG. **13** is an isometric view of a case having an over center lid according to some embodiments of the disclosure;

FIG. **14** is an isometric view of the case shown in FIG. **13** with the over center lid in an open position;

FIG. **15** is a graph showing attraction and repulsion forces associated with an over center lid according to some embodiments of the disclosure;

FIG. **16** is a side view of a case that includes one pair of magnets with misaligned poles and one pair with a high permeable material surrounding them according to some embodiments of the disclosure;

FIG. **17** is a side view of a case that includes two pairs of magnets attached to springs according to some embodiments of the disclosure;

FIG. **18** is an isometric view of a magnet that may be used in a case according to some embodiments of the disclosure;

FIG. **19** is an isometric view of a magnet that may be used in a case according to some embodiments of the disclosure;

FIG. **20** is an isometric view of a magnet that may be used in a case according to some embodiments of the disclosure;

FIG. **21** is an isometric view of a magnet that may be used in a case according to some embodiments of the disclosure;

FIG. **22**A is a side view of a case with a torsion spring over center mechanism according to some embodiments of the disclosure with its lid closed;

FIG. **22**B is an isometric view of the torsion spring over center mechanism illustrated in FIG. **22**A;

FIG. **22**C is a side view of the case illustrated in FIG. **22**A with its lid partially open;

FIG. **22**D is a side view of the case illustrated in FIG. **22**A with its lid open further;

FIG. **23** is a simplified perspective view of a wireless charging system according to embodiments of the disclosure;

FIG. **24** is a block diagram of an inductive power receiving system that can be part of the charging system illustrated in FIG. **23** according to some embodiments;

FIG. **25** is a simplified plan view of the earbud case illustrated in FIG. **23**;

FIG. **26** is a block diagram of an embodiment of the inductive power transmitting system illustrated in FIG. **23**;

FIG. **27** is a simplified isometric view of an inductively charged case on an inductive charging system according to some embodiments of the disclosure;

FIG. **28** is an isometric view of an electrical connector that can be included in the case illustrated in FIG. **1** according to some embodiments of the disclosure;

FIG. **29** is an isometric exploded view of the electrical connector illustrated in FIG. **28**;

FIG. **30** illustrates isometric front and rear views of a left earbud according to some embodiments of the disclosure;

FIG. **31** illustrates isometric front and rear views of a right earbud according to some embodiments of the disclosure;

FIG. **32** is a cross-sectional view of one of the earbuds illustrated in FIGS. **30** and **31**;

FIG. **33** is a cross-sectional view of one of the earbuds illustrated in FIGS. **30** and **31** with some components removed;

FIG. **34** is a plan view of a flexible circuit board that can be used in earbuds according to some embodiments of the disclosure;

FIG. **35** is an isometric view of the flexible circuit board illustrated in FIG. **34**;

FIG. **36** is an isometric view of a connector structure that can be included in the earbuds illustrated in FIGS. **30** and **31**;

FIG. **37** is an isometric view of contacts for the connector structure illustrated in FIG. **36** according to some embodiments of the disclosure;

FIG. **38** is an isometric view of the contact structure illustrated in FIG. **36**;

FIG. **39** is an isometric view of an earbud connector contact according to an embodiment of the disclosure;

FIG. **40** is an isometric view of an insert molded connector contact that was illustrated in FIG. **39**;

FIG. **41** is an isometric view of an earbud with a capacitive sensor insert according to some embodiments of the disclosure;

FIG. **42** is a cross-section of the earbud and the capacitive sensor insert illustrated in FIG. **41**;

FIG. **43** is a plan view of a capacitive sensor insert illustrated according to an embodiment of the disclosure;

FIG. **44** is a plan view of a capacitive sensor insert illustrated according to an embodiment of the disclosure;

FIG. **45**A is an illustration of an earbud with an acoustic insert according to an embodiment of the disclosure;

FIG. **45**B is an illustration of the earbud with the acoustic insert illustrated in FIG. **45**A;

FIG. **46** is a flowchart illustrating steps associated with manufacturing an earbud according to some embodiments of the disclosure;

FIG. **47** illustrates a system **47** according to some embodiments of the disclosure;

FIG. **48** is a simplified block diagram of a system **4800** according to some embodiments of the disclosure;

FIG. **49** is a flowchart illustrating steps associated with pairing wireless headphones with a host device according to some embodiments of the disclosure;

FIG. **50** is a flowchart illustrating steps associated with activating a wireless radio in earbuds according to some embodiments of the disclosure; and

FIG. **51** is a flowchart illustrating steps associated with deactivating a wireless radio in earbuds according to some embodiments of the disclosure.

DETAILED DESCRIPTION

Some embodiments of the present disclosure relate to portable listening devices and cases for containing and/or charging such devices that have improved features that can improve the user experience associated with using the case and/or the portable listening device. While the present disclosure can be useful for a wide variety of portable listening devices, some embodiments of the disclosure are particularly useful for wireless earbuds and cases for wireless earbuds as described in more detail below.

For example, in some embodiments a pair of wireless earbuds are sized and shaped to fit within a case that can also include a rechargeable battery and charging circuitry. The pair of earbuds can be charged when an earbud detector within the case detects that the earbuds are placed within the case. Further the case can include sensors to detect if the lid is open such that the wireless radio within each earbud can be activated so they are ready for use by the user. Similarly, when the lid is closed the wireless radio can be shut off so the charge in the earbud batteries is conserved.

In another example the case can have a pairing button on it that is operable to place the earbuds in a pairing mode. In a further example the case can also have one or more charge indicator lights to inform the user of the charge level in the case battery as well as the charge level in each earbud.

In another example the case can have a lid with an over center configuration such that the lid is in a first stable position when in a closed position and is in a second stable position when in the open position, but is in an unstable position in-between the closed position and the open posi-

AliveCor, Inc. Exhibit 1019
IPR2023-00948
Ex. 1019.47

tion. In some embodiments the over center configuration can be achieved by using two pairs of magnets while in other embodiments it can be achieved with a torsion spring. In further examples the case can have one or more magnets within it to attract the earbuds into cavities formed within the case and to retain them until a user removes them.

In another example the case can be liquid-tight to prevent liquid from damaging the internal circuitry. The electrical connections for both the earbud recharging and for recharging the case can be resistant to penetration by a liquid.

In another example the earbuds can have an acoustic insert that forms one or more acoustic ports such as a bass port vent and a rear vent that enable the internal speaker to provide audio performance in the confined space within the earbud housing.

In another example the earbud case can be used to initiate Bluetooth® pairing of the earbuds with a host device. In one embodiment a lid position sensor detects when the lid is open and initiates pairing of the earbuds.

In order to better appreciate the features and aspects of portable listening devices and their cases according to the present disclosure, further context for the disclosure is provided in the following section by discussing several particular implementations for earbuds and a case for earbuds according to embodiments of the present disclosure. The specific embodiments discussed are for example purposes only and other embodiments can be employed in other portable listening devices and cases that can be used for other portable listening devices as well as other devices.

As used herein, the term "portable listening device" includes any portable device designed to play sound that can be heard by a user. Headphones are one type of portable listening device, portable speakers are another. The term "headphones" represents a pair of small, portable listening devices that are designed to be worn on or around a user's head. They convert an electrical signal to a corresponding sound that can be heard by the user. Headphones include traditional headphones that are worn over a user's head and include left and right listening devices connected to each other by a headband, headsets (a combination of a headphone and a microphone), and earbuds (very small headphones that are designed to be fitted directly in a user's ear). Traditional headphones include both over-ear headphones (sometimes referred to as either circumaural or full-size headphones) that have earpads that fully encompass a user's ears, and on-ear headphones (sometimes referred to as supra-aural headphones) that have earpads that press against a user's ear instead of surrounding the ear. As used herein, the term "earbuds", which can also be referred to as earphones or ear-fitting headphones, includes both small headphones that fit within a user's outer ear facing the ear canal without being inserted into the ear canal, and in-ear headphones, sometimes referred to as canalphones, that are inserted in the ear canal itself.

Earbud Case

FIG. **1** depicts a simplified plan view of a case **100** for a pair of wireless earbuds according to some embodiments of the disclosure. As shown in FIG. **1**, case **100** includes a housing **105**, also called a body, having one or more cavities **110***a*, **110***b* configured to receive a pair of earbuds **115***a*, **115***b*. In some embodiments, cavities **110***a*, **110***b* can be positioned adjacent to each other on opposite sides of a center plane of case **100**. Each cavity **110***a*, **110***b* can be sized and shaped to match that of its respective earbud **115***a*, **115***b*. Each cavity can include a stem section **116***a*, **116***b* and a bud section **117***a*, **117***b*. Each stem section **116***a*, **116***b* can be an elongated generally cylindrical cavity that extends from its respective bud section **117***a*, **117***b* towards a bottom **106** of case **100**. Each bud section **117***a*, **117***b* can be offset from its respective stem section **116***a*, **116***b* and open at an upper surface **108** of housing **105**. Embodiments of the disclosure are not limited to any particular shape, configuration or number of cavities **110***a*, **110***b* and in other embodiments cavities **110***a*, **110***b* can have different shapes to accommodate different types of earbuds, different configurations and/or can be a single cavity or more than two cavities.

Case **100** further includes a lid **120** attached to housing **105**. Lid **120** is operable between a closed position where lid **120** is aligned over one or more cavities **110***a*, **110***b* fully enclosing pair of earbuds **115***a*, **115***b* within the housing, and an open position where the lid is displaced from the housing and cavities **110***a*, **110***b* such that a user can remove the earbuds from the cavities or replace the earbuds within the cavities. Lid **120** can be pivotably attached to housing **105** and can include a magnetic or mechanical system (not shown in FIG. **1**) that provides lid **120** with a bi-stable operation, as described more fully below. In some embodiments case **100** can also include a charging system **125** configured to charge pair of earbuds **115***a*, **115***b*; one or more magnets **130** configured to orient and retain the pair of earbuds within one or more cavities **110***a*, **110***b*; and other features that are further described below.

FIG. **2** is a simplified block diagram of system **200** according to an embodiment of the present disclosure. System **200** can include pair of earbuds **202***a*, **202***b*, a case **204** for the pair of earbuds, and a power source **205** for charging the case. Earbuds **202***a*, **202***b* can be positioned within case **204** (e.g., within an interior space or cavity of the case defined by a housing or an insert within the housing) where they can be conveniently stored and charged. Case **204** can be representative of case **100** and earbuds **202***a*, **202***b* can be representative of earbuds **115***a*, **115***b* discussed above with respect to FIG. **1**.

Each earbud **202***a*, **202***b* can each have one or more inputs **255**, internal components **260** and one or more outputs **265**. In some embodiments one or more inputs **255** can be a microphone input and one or more buttons or sensors that register a user's touch. In various embodiments an accelerometer or a capacitive sensor can be used as an input **255** and can be activated, for example, by a user to answer a call or command earbuds **202***a*, **202***b* to enter a pairing mode that can be indicated by a light on either or both earbuds. In various embodiments one or more internal components **260** can include a speaker, a microphone, a rechargeable battery, a processor, and/or other circuitry and components. In various embodiments one or more outputs **265** can be audio from a speaker, a light or other indicator. In some embodiments the indicator light can indicate an incoming call, a battery charge level, a pairing mode or other function.

In some embodiments each of earbuds **202***a*, **202***b* can include a wireless radio that can be both an input **255** and an output **265** device. The wireless radio can enable the earbuds to receive an audio signal from an audio player, such as a smart phone. In some embodiments one or more of earbuds **202***a*, **202***b* include a radio that can also transmit an audio signal such as a microphone signal from one or more of the earbuds. In yet further embodiments, one or more of earbuds **202***a*, **202***b* can include a radio that can transmit communication signals that can command the receiving device (e.g., a host device such as a smartphone) to perform one or more functions such as, but not limited to, connect a phone call, disconnect a phone call, pause audio playback, fast forward or rewind audio playback or mute a microphone signal. The

AliveCor, Inc. Exhibit 1019
IPR2023-00948
Ex. 1019.48

wireless radio can employ any short range, low power communication protocol such as Bluetooth®, low power Bluetooth®, or Zigbee among protocols.

Case **204** can include a case processor **210**, an earbud detector **215**, radio **217**, a lid sensor **220**, case charging circuitry **225**, a battery **227** and earbud charging circuitry **230**. Case **204** can also include an earbud interface **245** that enables circuitry within case **204** to communicate with and/or charge earbuds **202***a*, **202***b* and power source interface **250** that couples the case to wired or wireless power source **205**, such as an AC or DC power source or an inductive charging pad. In some embodiments, case charging circuitry **225**, battery **227**, earbud charging circuitry **230** and interfaces **245** and **250** are all representative components of charging system **125** shown in FIG. **1**.

Power source interface **250** can be part of a receptacle connector for a micro USB connector, a Lightening connector or other connector that can provide power to earbud case **204**. Alternatively, or in addition to a receptacle connector, power interface **250** can include a wireless power receiver, such as one or more wireless power receiving coils, that can receive inductive power from power source **205**. Earbud interface **245** can transfer power and/or data between case **204** and the earbuds via case transfer interface **270** in each earbud. Earbud interface **245** can include an electrical connector, such as one of the connectors described herein with respect to FIGS. **4**A-**8**C, a different type of electrical connector, or a wireless power transmitter, such as a wireless power transmitting coil that can transmit inductive power to an inductive power receiver within the earbuds.

Case processor **210** can be configured to control various functions of case **204** as described in more detail below. In some embodiments, earbud detector **215** includes one or more sensors that detect when one or both of earbuds **202***a*, **202***b* are placed within case **204**. In one embodiment earbud detector **215** can be a circuit that periodically "pings" the earbud contacts within case **204** to determine if either earbud **202***a*, **202***b* is present. In other embodiments earbud detector **215** can be any type of mechanical or electrical sensor, such as, but not limited to, a magnetic sensor, an optical sensor, a switch, a hall effect sensor, a flux sensor, a capacitive sensor, a photodetector, a proximity detector, a momentary switch or any other type of sensor.

In embodiments where earbud detector **215** is a flux sensor, the flux sensor can be beneficial to minimizing power consumption of case **204**. As an example, a flux sensor can be formed in case **204** for each earbud from a coil of wire and one or more magnets within earbuds **202***a*, **202***b*. Each flux sensor can be configured to generate a current in the coil of wire when an earbud is inserted or withdrawn from case **204** and the magnet within the earbud passes through the coil of wire. In a further example, a flux sensor can function as a completely passive sensor that requires no power to operate, and generates its own energy to notify processor **210** of the removal or replacement of either earbud **202***a*, **202***b* within case **204**. In some embodiments a hall effect sensor can also be beneficial to minimize power consumption. In various embodiments, one or more sensors can be beneficial so that a voltage bias (e.g., a ping) need not be applied to the earbud connectors, thus mitigating contact corrosion and/or oxidation in moist environments.

In one example case **204** can include separate earbud receiving cavities within the case, such as cavities **110***a*, **110***b* described above, and earbud detector **215** can include first and second earbud detectors—one detector for each cavity. The first earbud detector can be operatively coupled to detect when an earbud (e.g., a left earbud) is inserted within a first of the cavities and the second earbud detector can be operatively coupled to detect when an earbud (e.g., a right earbud) is inserted within the other cavity. In other embodiments a single detector can detect when either earbud **202***a*, **202***b* is placed within case **204**.

In response to detecting the insertion of an earbud within the case, earbud detector **215** can generate a detect signal that can be sent to and processed by other circuitry within case **204** to initiate charging of the buds. When earbud detector **215** includes first and second detectors that can detect the insertion of the left and right earbuds (or first and second earbuds that are interchangeable between the left and right ears), respectively, each earbud detector can generate a separate detect signal that can initiate charging of the detected earbud only.

Similar to initiating charging, earbud detector **215** can also be used to stop charging. For example, earbud detector **215** can detect when either or both of the earbuds are removed from the case and generate a removal signal that stops the charging of the removed earbud or earbuds.

In some embodiments earbud detector **215** can initiate the charging process of each earbud **202***a*, **202***b* when the earbud detector detects that electrical contact is made between the earbuds and corresponding charging contacts within the housing (e.g., within each cavity **110***a*, **110***b*). More specifically, in various embodiments earbud detector **215** can periodically "ping" the charging contacts to see if either or both earbuds **202***a*, **202***b* are present within each cavity **110***a*, **110***b*. Even if either or both earbuds **202***a*, **202***b* have zero battery charge they can still have a characteristic impedance or other electrical characteristic that enables earbud detector **215** to detect that they are connected to the charging contacts and initiate charging with earbud charging circuitry **230**. The charging contacts and electrical connection between earbuds **202***a*, **202***b* and case **204** will be discussed in detail below. In some embodiments earbud detector **215** is part of processor **210** and the processor does the sensing. In other embodiments, earbud detector **215** is separate active/passive components. In various embodiments, case **204** does not include a case processor **210** and instead, circuitry comprising various active and/or passive components is configured to perform the functions described herein and attributed to the processor.

In some embodiments case processor **210** can communicate with pair of earbuds **202***a*, **202***b* by sending and receiving data through earbud interface **245** (and through case interface of either or both earbuds) and can communicate with power source **205** by sending and receiving data through power source interface **250**. That is, in various embodiments earbud interface **245** and power source interface **250** can be capable of carrying both power and data signals for single or bidirectional communication. In some embodiments separate power and data contacts can be used while in various embodiments one set of contacts is used for both power and data. For example, in some embodiments power source **205** can be a computing device that communicates with power source interface **250** through an interface (not shown), such as a USB interconnect or a Lightning interconnect developed by Apple Inc. The interconnect can provide DC current to case battery **227** for charging and can provide bidirectional communication between case processor **210** and the computing device. In another example power source **205** can transmit firmware updates to both case processor **210** and pair of earbuds **202***a*, **202***b* through the same contacts that are used to charge the devices. Data communication between earbud interface **245** and pair of earbuds **202***a*, **202***b* can use a similar communication pro-

tocol as discussed above or any other protocol such as, for example, serial communications.

In some embodiments case **204** can include a wireless radio **217** that enables the case to transmit and receive data communications with earbuds **202***a*, **202***b* and a host device (e.g., a smartphone, a tablet computer, a laptop computer or the like) in addition to, or instead of, relying on data exchange through interfaces **245** and **250**. For example, wireless radio **217** can be used to initiate a pairing sequence between earbuds **202***a*, **202***b* and a host device. In another example radio **217** can be used to receive a music download from a host device to be stored in case **204**.

Lid sensor **220** can detect when a lid to the case (e.g., lid **120** shown in FIG. **1**) is in the open position and when the lid is in the closed position. In some embodiments case processor **210** is coupled to lid sensor **220** and receives signals from the lid sensor indicating when the lid is opened and closed. More specifically, in some embodiments lid sensor **220** can generate and send an "open" signal to processor **210** upon detecting when the lid is opened, and lid sensor **220** can generate and send a "closed" signal to processor **210** upon detecting the closure of the lid. Processor **210** can be configured to communicate with pair of earbuds **202***a*, **202***b* to turn ON their wireless radios when the lid is in the open position (e.g., in response to receiving the "open" signal) so they are ready for use by a user and turn OFF their wireless radios when the lid is in the closed position (e.g., in response to receiving the "closed" signal) to conserve their power. In various embodiments lid sensor **220** can also trigger case processor **210** to enter a pairing mode when the case lid is opened, as explained in more detail below. In some embodiments case processor **210** can communicate with pair of earbuds **202***a*, **202***b* through earbud interface **245** and case interface **270** using a wired connection as discussed above, while in other embodiments case processor **210** can communicate with earbuds **202***a*, **202***b* through interfaces **245** and **270** wirelessly in addition to, or instead of, using a wired connection. In some embodiments lid sensor **220** can be any type of mechanical or electrical switch including, but not limited to, a momentary switch, a capacitive sensor, a magnetic sensor (e.g., hall effect) or an optical sensor.

Case battery **227** provides power for the circuitry associated with case **204** and can be a rechargeable battery that can be charged by power source **205** and enclosure charging circuitry **225** through power source interface **250**. Case battery **227** is also coupled to earbud interface **245** and can charge pair of earbuds **202***a*, **202***b* in conjunction with earbud charging circuitry **230**. In some embodiments earbud charging circuitry **230** can charge pair of earbuds **202***a*, **202***b* anytime they are properly stored within cavities **110***a*, **110***b* even though case **204** is not coupled to power source **205**. Thus, case **204** can be capable of charging pair of earbuds **202***a*, **202***b* while the case is, for example, in a user's pocket as long as case battery **227** has sufficient charge. In various embodiments case battery **227** can be sealed within case **204**, while in some embodiments the case battery can be removable for servicing and/or replacement with another charged battery. Case processor **210** can additionally be coupled to case charging circuitry **225** that can control the charging of case battery **227** (e.g., control the voltage and current supplied to the battery to optimize the speed of charging and the life of the battery). In some embodiments case charging circuitry **225** can include a DC/DC converter, an AC/DC converter, battery voltage level monitoring circuitry and/or safety features to properly charge case battery **227**.

Similarly, in some embodiments case processor **210** can be coupled to earbud charging circuitry **230** that can control the charging of batteries within pair of earbuds **202***a*, **202***b* (e.g., control the voltage and current supplied to the batteries to optimize the speed of charging and the life of the batteries) through earbud interface **245**. In various embodiments earbud charging circuitry **230** can include a DC/DC converter, battery voltage level monitoring circuitry and/or safety features to properly charge earbud batteries.

In various embodiments case **204** can include one or more charge indicators **235** that can indicate a charge level of case battery **227** and/or the pair of earbud batteries such that a user can see the indicators on an outer surface of case **100** (see FIG. **1**). In some embodiments charge indicators **235** can include three LEDs, one indicating the status for case battery **227** and one for indicating the status of the battery in each of pair of earbuds **202***a*, **202***b*. In various embodiments charge indicators **235** can be a first color (e.g., green) if the respective battery is near full charge, a second color (e.g., amber) if the respective battery is less than 75 percent charged and a third color (e.g., red) if there is no charge or limited charge. In some embodiments, charge indicators **235** can include multiple LEDs for each of battery **227**, earbud **115***a* and earbud **115***b*, where the number of LEDs lit indicate the strength of the battery for each component. For example, in one particular instance three sets of three LEDs can be included on case **204**.

In some embodiments case **204** can also include one or more user input devices **240**. Each included input device **240** can be a button or other type of input that, in response to being activated by or otherwise receiving input from a user, generates a signal that can be communicated to processor **210** or other circuitry within case **204**. Processor **210**, or the other circuitry, can then act upon the signal. For example, in various embodiments the wireless radios used by pair of earbuds **202***a*, **202***b* can be a Bluetooth® or other radio system that requires a pairing sequence to establish communication between the pair of earbuds and a wireless transmitter in an electronic device. In such embodiments, if input device **240** is a wireless pairing button, processor **210** can send a signal to the earbuds via earbud interface **245** to place the wireless radios within pair of earbuds **202***a*, **202***b* into a pairing mode. More specifically, in some embodiments the user can depress a pairing button located on case **204** that notifies case processor **210** to instruct pair of earbuds **202***a*, **202***b* via interface **245** to enter a pairing mode. In some embodiments pair of earbuds **202***a*, **202***b* can be required to be within the case (e.g., within cavities **110***a*, **110***b* as shown in FIG. **1**) while entering the pairing mode while in other embodiments the earbuds may not need to be within case **204** and only need to be within wireless communication range of the case. Further details with regard to wireless pairing will be discussed later in the application.

Now referring to FIG. **3**, a simplified cross-sectional perspective view of case **100** is illustrated. As shown in FIG. **3**, case **100** includes housing **105** having cavities **110***a*, **110***b* for holding pair of earbuds **115***a*, **115***b* and various electronic circuitry. Case **100** further includes lid **120** attached to housing **105** and operable between a closed position where lid **120** is aligned over one or more cavities **110***a*, **110***b* fully enclosing pair of earbuds **115***a*, **115***b* within housing and an open position where the cavities **110***a*, **110***b* are exposed such that a user can remove or replace the earbuds within the cavities.

As discussed above, lid **120** can be pivotably attached to housing **105** with joint **305** enabling the lid to be operable between a closed position and an open position. In some

embodiments lid **120** can have a bi-stable position where it is stable in the closed and open positions, but unstable between those positions such that it tends to be attracted to either the closed or the open position. In various embodiments the bi-stable operation can be enabled by employing a first pair of magnetic elements **310***a*, **310***b* and a second pair of magnetic elements **315***a*, **315***b*, as discussed in more detail below. In some embodiments a lid sensor **220** can be disposed in housing **105** and configured to detect when lid **120** is in the closed position (e.g., when a detectable medium **320** is adjacent the lid sensor) and when the lid is in the open position (e.g., when the detectable medium is not adjacent the lid sensor). In some embodiments the detectable medium can be a magnetic material.

Pair of earbuds **115***a*, **115***b* can fit within cavities **110***a*, **110***b* each of which is sized and shaped to accept one of the earbuds. In some embodiments, when each earbud is fully inserted within its respective cavity **110***a*, **110***b*, a portion of each earbud extends out of the cavity enabling a user to easily grab and remove the earbud from the case. Lid **120** can include a cavity (or pair of cavities **360***a*, **360***b* as shown in FIG. **3**) into which the portion of each earbud that extends out of its respective cavity **110***a*, **110***b*, extents into. While not shown in FIG. **3**, each cavity **360***a*, **360***b* can be sized and shaped to match the size and shape of the portion of each earbud the cavity surrounds to more securely store the earbuds within case **100**.

Each earbud can include a speaker assembly (not shown in FIG. **3**) disposed within a housing of the earbud. The speaker assembly can include a driver unit aligned to emit sound from the directional sound port. The driver unit can include an electromagnetic voice coil, a speaker diaphragm and a driver magnet (shown in FIG. **3** as magnet **325**) operatively coupled to the voice coil to move the diaphragm in response to electrical signals and produce sound. In addition to the driver magnet, earbuds according to some embodiments of the disclosure can include an additional magnetic plate **330** that is not operatively coupled to the voice coil. Either or both of magnet **325** and magnetic plate **330** can be attracted to at least one housing magnetic component **130** disposed within case **100**. The attraction can be strong enough to magnetically secure first earbud **115***a* into first cavity **110***a* and second earbud **115***b* into second cavity **110***b*, as discussed in more detail below. In some embodiments magnetic plate **330** can be made from a magnetic material and in various embodiments it can be made with a metal injection molding process. In some embodiments magnetic plate **330** is magnetized while in other embodiments it is not magnetized but is magnetically attractable.

To increase the magnetic attraction between magnetic component **130** and magnetic plate **330**, the magnetic plate **330** in each earbud can be positioned direction adjacent to the earbud housing. Additionally, the magnetic plate be contoured to match the curvature of the housing thereby ensuring a minimum distance between the magnetic plate and the housing across the surface are of the magnetic plate. Similarly, at least some or the housing magnetic components **130** can be disposed as close as possible to the surface of the receiving cavity at a location that is spaced directly apart from where the magnetic plate **330** will be when an earbud is received within the cavity. In some embodiments the housing components **130** can be contoured to match the curvature of the receiving area (which matches the curvature of its respective earbud) to minimize the distance between the housing magnetic component **130** and the magnetic plate **330**.

In some embodiments housing **105** and lid **120** can be made from the same material while in various embodiments they can be made from different materials. In some embodiments both housing **105** and/or lid **120** can be made from a plastic material, stainless steel, aluminum or any other material.

Charging system **125** can include a circuit board **335** or other electrical routing structure, a rechargeable case battery **227**, electrical interconnects **340** to pair of earbuds **115***a*, **115***b*, one or more electronic components, such as case processor **210**, and an electrical connector **345** for connecting to power source **205** (see FIG. **2**). In some embodiments connector **345** can, for example, be a non-proprietary interface such as a USB connector or can be a proprietary interface such as the Lightning connector developed by Apple Inc. In various embodiments connector **345** can be liquid-tight, as discussed in more detail below. One or more charge indicators **235** can be visible on an exterior surface **350** of case **100**. In some embodiments each earbud in pair of earbuds **115***a*, **115***b* can be electrically coupled to charging system **125** by a connector **347** disposed at an end of a stem portion of each earbuds **115***a*, **115***b*, as discussed in more detail below.

Earbud Connectors

FIGS. **4**A-**8**C illustrate several examples of electrical connectors that can be used between each individual earbud in pair of earbuds **115***a*, **115***b* and case **100** (see FIG. **3**), similar to connector **347** in FIG. **3**. While each of FIGS. **4**A-**8**C illustrate an earbud connector for a first earbud **115***a*, it is to be understood that second earbud **115***b* can be configured identical to first earbud **115***a* and thus include a similar electrical connector. Additionally, while the embodiments illustrated in FIGS. **4**A-**8**C include external contacts that are disposed at the end of a stem of the earbud, the contacts can be at different locations in other embodiments.

FIGS. **4**A and **4**B are simplified cross-sectional views of an electrical connector **400** that can be incorporated into earbud case **100** and an electrical connector **405** at the end of a stem portion of an earbud **115***a* according to an embodiment of the disclosure. Electrical connector **405** can be used to conduct power and/or data according to some embodiments of the disclosure. Connector **405** can be part of an earbud interface and can include first and second earbud contacts **410**, **415**, respectively. A bottom view of electrical connector **405** is illustrated in FIG. **4**B. In some embodiments, earbud contacts **410**, **415** can be annular and separated by an insulator **420**. Receptacle connector **400** can be used in a case such as case **100** illustrated above and can have a first earbud case contact **425** and a second earbud case contact **430**. First annular contact **410** can interface with first earbud contact **425** and second annular contact **415** can interface with second earbud contact **430**. First and second annular contacts **410**, **415** can be any type of conductive material including gold, silver or palladium plated copper.

In some embodiments first and second earbud contacts **410**, **415**, respectively are power and ground contacts. That is, either of first and second earbud contacts **410**, **415**, respectively can be used for power while the other can be used for ground. As examples, in some embodiments first contact **410** is used for power and second contact **415** is ground while in other embodiments first contact **410** is used for ground and second contact **415** is used for power. In various embodiments other connector configurations can be used that have more than two contacts.

First and second earbud case contacts **425**, **430** can be coupled to charging system **125** (see FIG. **3**) with electrical

interconnects **340** in case **100** to facilitate charging and communication of each earbud **115***a*, **115***b*. In various embodiments a circular microphone aperture **435** can be located in the center of second annular contact **415** of each earbud **115***a*, **115***b* to facilitate two way telephonic communication and/or noise cancellation. Microphone aperture **435** can be covered by an aesthetic acoustic mesh to protect the microphone from debris and damage.

FIGS. **5**A and **5**B illustrate another example receptacle connector **500** that can be incorporated into earbud case **100** and an electrical connector **505** at the end of a stem portion of an earbud **115***a* according to an embodiment of the disclosure. Connector **500** has one annular contact and one center contact, however, as described in more detail below. Connector **505** can be part of an earbud interface and can include first and second earbud contacts **510**, **515**, respectively. A bottom view of electrical connector **505** is illustrated in FIG. **5**B. In some embodiments, ring contact **510** can be ring shaped and circular contact **515** can be circular with the contacts separated by an insulator **520** (e.g., insulator **520** can be an air gap). Ring contact **510** can interface with first earbud contact **525** and circular contact **515** can interface with second earbud contact **530**. In various embodiments a circular microphone aperture **535** can be located between ring contact **510** and circular contact **515** so one or more of pair of earbuds **115***a*, **115***b* can be used for two way telephonic communication.

FIGS. **6**A and **6**B illustrate another example receptacle connector **600** that can be incorporated into earbud case **100** and an electrical earbud connector **605** disposed at the end of a stem portion of an earbud **115***a* according to an embodiment of the disclosure. Receptacle connector **600** can make electrical contact with electrical earbud connector **605** as described in more detail below. Earbud connector **605** can be part of an earbud interface and can include first and second earbud contacts **610**, **615**, respectively. A bottom view of electrical earbud connector **605** is illustrated in FIG. **6**B. As shown in FIG. **6**B, contacts **610**, **615** can be spaced from each other in an oppositional and symmetrical relationship. In some embodiments, each of earbud contacts **610** and **615** can have a partial annular shape (i.e., a partial ring) with the open portions of each contact facing the other. For example, contact **610** can include ends **610***a*, **610***b* and contact **615** can include ends **615***a*, **615***b* where end **610***a* is spaced apart from end **615***a* and end **610***b* is spaced apart from end **615***b*. While FIG. **6**B illustrates each of contacts **610**, **615** as half rings, in other embodiments the contacts can include shorter length arcs and/or have different opposing shapes altogether.

Earbud contacts **610**, **615** can be separated from each other by an insulator **620** (e.g., insulator **620** can be a dielectric material as discussed in more detail below). Earbud contact **610** can interface with first earbud case contact **625** and earbud contact **615** can interface with second earbud case contact **630**. In various embodiments a circular microphone aperture **635** can be located between earbud contacts **610** and **615** enabling pair of earbuds **115***a*, **115***b* to be used for two way telephonic communication. Receptacle connector **600** can include a contact carrier **640** that retains earbud case contacts **625**, **630** as described in more detail below. In some embodiments, contact carrier **640** can make earbud receptacle cavity **645** liquid-tight.

In some embodiments, each of the first and second earbud contacts **610**, **615**, respectively, can include a contact portion that extends into an earbud receiving cavity of the earbud case when the earbud is positioned within the cavity. Receptacle connector **600** can include a pair of earbud case contacts **625**, **630** that are positioned on opposite sides of and extend into the earbud receiving cavity. Earbud case contacts **625**, **630** can be held within receiving slots **628**, **633** of a contact carrier **640** as discussed further below. The contact portion of each earbud contact **610**, **615** can have an arcuate cross-section that makes contact with arcuate contact portions **626**, **631** of contacts **625**, **630** respectively, during a mating event when the earbud is inserted into the earbud receiving cavity. The combination of arcuate surfaces on the earbud contact and earbud case contact enable a contact wiping motion each time the earbuds are inserted within and drawn out of the receptacle connector, creating a reliable interconnect. In FIG. **6**A, contacts **625**, **630** are illustrated in a deflected state that illustrates their approximate position when earbud **115***a* is fully inserted into its receiving cavity such that the earbud contact is engaged with the earbud case connector.

The same contacts **625**, **630** are also illustrated in FIG. **6**A in a non-deflected state **627**, **632** showing the contacts extending into the earbud receiving cavity prior to being mated with the earbud contacts of earbud **115***a*. During a mating event, as earbud **115***a* is inserted deeper into the earbud receiving cavity, the earbud case contacts **625**, **630** come in contact with the earbud contacts and deflect outward. The exterior contacting surfaces of the earbud contacts and earbud case contacts rub against each other during both the mating event and during a de-mating event when the earbud **115***a* is withdrawn from the earbud receiving cavity. In various embodiments the deflecting arcuate portions **626**, **631** of contacts **625**, **630** respectively, are deflected by arcuate portions of first and second earbud contacts **610**, **615**, respectively during insertion and withdrawal of the first and second earbuds. Since the arcuate portions are in direct contact and contacts **625**, **630** are in a deflected (e.g., spring loaded state), pair of earbuds **115***a*, **115***b* has a vertical (e.g., ejecting) force applied to them when fully mated with the case. In some embodiments, as discussed in more detail herein, one or more magnets can be used to overcome the vertical force and hold the earbuds within their respective cavities.

In some embodiments one of contacts **625**, **630** can be arranged to make contact with the earbud contacts **610**, **615**, first by preloading one of contacts **625**, **630** at a different height than the other (e.g., sequential contacts). This can be useful in some embodiments to make a ground connection to the earbud first before making an active electrical connection with it. The wiping contacts and the sequentially contacting contacts can be used in any of the connector embodiments disclosed herein.

In various embodiments contact carrier **640** can include a debris recess **609** disposed below the contact interface region. Debris recess **609** can have a cup-like shape defined by sidewalls **609***a* and can be useful for providing a location for debris that falls into either earbud cavity. Debris recess **609** can be disposed between earbud case contact receiving slots **628**, **633** and spaced apart from the contact area so the debris does not interfere with the earbuds making electrical contact with receptacle connector **600**. Debris recess **609** can further be open to the earbud receiving cavity so that debris can be periodically cleaned out as needed. In some embodiments a separate debris recess **609** is disposed under each earbud contact area while in other embodiments a single debris recess can be sufficiently wide to capture debris from both contact areas.

Debris recess **609**, or a similar debris capture structure, can be included in any of the connector embodiments disclosed herein. In one embodiment debris recess **609** has

a depth below arcuate portions **626**, **631** of contacts **625**, **630** that is 50 percent or more than a diameter of debris recess **609**. In another embodiment debris recess **609** has a depth that is 75 percent or more than the diameter of debris recess **609** while in another embodiment its depth is 100 percent (e.g., having a depth to diameter ratio of 1:1) or more of the diameter.

In some embodiments contacts **625**, can be made out of a copper, nickel and silver alloy while in other embodiments they can be made out of a phosphor and bronze alloy, and in other embodiments a different alloy can be used.

Now referring to FIG. **6**C an exploded view of receptacle connector **600** is shown. As shown in FIG. **6**C, connector **600** includes first and second shells **650**, **655** that define receiving cavities for a pair of earbuds retaining and guiding a stem portion of each earbud into case **100** (see FIG. **1**). While not shown in FIG. **6**C, the receiving cavity in each shell can include an elongated tube portion that opens to a larger earbud receiving opening. The elongated tube portion can be sized and shaped to accommodate the stem section of an earbud and the larger earbud receiving opening can be sized and shaped to partially or fully accommodate the ear interface portion (i.e., the portion of the earbud that fits within a user's ear).

In some embodiments shells **650**, **655** can be separate components joined together by the contact carrier while in other embodiments shells **650**, **655** can be a single component that can be formed, for example, in a molding process, a 3D printing process or with a milling process. Contact carrier **640** holds first and second earbud contacts **625**, **630**, respectively, that can interface with a first earbud, and also holds third and fourth earbud contacts **660**, **665**, respectively, that can interface with a second earbud. A collar **670** can be bonded to a top surface **675** of contact carrier **640**. In some embodiments collar **670** can have a removable tie bar (not shown in FIG. **6**C) that holds the three pieces of the collar together during assembly and that can then be removed after assembly such that the tie bar is not included within a finished earbud case.

Distal ends **680**, **685** of first and second shells **650**, **655**, respectively, can be narrower than the elongated tube portion of shell **650**, **655**, and each distal end **680**, **685** can be fit within and bonded to collar **670** forming a completed shell and receptacle connector assembly **690**, illustrated in FIG. **6**D. In the completed assembly, each earbud case contact **625**, **630** fits within a respective contact opening of shell **650** and each earbud case contact **625**, **630** fits within a respective contact opening (e.g., opening **687** visible in FIG. **6**C) of shell **655**. Each contact opening (e.g., opening **687**) enables its respective contact to extend into the earbud receiving cavity within its respective shell **650**, **655** to make electrical contact with an earbud contact during a mating event. When assembled, shell and contact assembly **690** can create a liquid-tight seal as defined herein. Shell and contact assembly **690** can subsequently be assembled into a case, such as case **100** illustrated in FIG. **1**. In some embodiments first and second shells **650**, **655** can be a single shell having two cavities, one cavity for each earbud.

As defined herein, a liquid-tight seal shall mean a seal that conforms to one or more of the following ratings as defined by the International Protection Rating and International Electrochemical Commission (IEC) 60529 that can also be known as the I.P.68 rating. In some embodiments the liquid-tight seal will protect the connector assembly against the harmful ingress of water and have a "liquid ingress" rating between 1 (dripping water) and 8 (immersion beyond 1 meter). In various embodiments the liquid-tight seal shall be rated between 1 (dripping water) and 4 (splashing water) while in some embodiments the liquid-tight seal shall be rated between 2 (dripping water with device tilted at 15 degrees) and 5 (water jet). In various embodiments the liquid-tight seal shall be rated between 3 (spraying water) and 6 (powerful water jets) while in some embodiments the liquid-tight seal shall be rated between 4 (splashing water) and 7 (immersion up to 1 meter). In various embodiments the liquid-tight seal shall be rated between 5 (water jets) and 8 (immersion beyond 1 meter) while in some embodiments liquid-tight shall mean the seal will protect the electronic device against liquid ingress up to 100 feet for 30 minutes.

Now referring to FIGS. **7**A and **7**B another example of a receptacle connector **700** is illustrated that is similar to connector **600** illustrated in FIGS. **6**A and **6**B. Receptacle connector **700** has a different configuration for the contacts and the contact carrier, however, as described in more detail below. This embodiment can use the same earbud connector shown in FIGS. **6**A and **6**B, where the earbud contacts are semicircular and separated by an insulator.

A contact carrier **740** holds first and second earbud contacts **725**, **730**, respectively, that can interface with a first earbud, and also holds third and fourth earbud contacts **760**, **765**, respectively, that can interface with a second earbud. A cap **770** can be bonded to a bottom surface **775** of contact carrier **740** with a layer of adhesive **773**. As illustrated in FIG. **7**B, distal ends of first and second shells **750**, **755**, respectively, can be fit within and bonded to contact carrier **740** forming a completed shell and receptacle connector assembly **790**. Shell and contact assembly **790** can be liquid-tight, meeting one or more of the ranges as defined herein. Shell and contact assembly **790** can subsequently be assembled into a case, such as case **100** illustrated in FIG. **1**.

Similar to contact carrier **640**, first and second earbud contacts can have an arcuate cross-section and can make contact with arcuate portions of receptacle connector contacts **725**, **730**. The combination of arcuate surfaces can enable a wiping motion each time the earbuds are inserted within and drawn out of the receptacle connector, creating a reliable interconnect. Further, in some embodiments one contact can be arranged to make contact with the earbud first. In one example the contacts can be preloaded at different heights. This can be useful in some embodiments to ground the earbud first before making an active electrical connection with it.

Now referring to FIGS. **8**A and **8**B another example of a receptacle connector **800** is illustrated that is similar to connector **400** illustrated in FIGS. **4**A and **4**B. Receptacle connector **800** has a different configuration for the inner and outer contacts, however, as described in more detail below.

In some embodiments, earbud contacts **810**, **815** can be annular and separated by an electrical insulator **820**. First annular contact **810** can interface with first earbud contact **825** and second annular contact **815** can interface with second earbud contact **830**. First and second annular contacts **810**, **815** can be formed from any type of conductive material including copper and copper alloys and can be plated with any metal. In various embodiments a circular microphone aperture **835** can be located in the center of second annular contact **815** so one or more of pair of earbuds **115***a*, **115***b* (see FIG. **1**) can be used for two way telephonic communication. Microphone aperture **835** can be covered by an aesthetic acoustic mesh to protect the microphone from debris and damage.

Similar to contact carrier **640**, first and second earbud contacts can have an arcuate cross-section and can make contact with arcuate portions of contacts **825**, **830** respec-

tively in receptacle connector **800**. The combination of arcuate surfaces can enable a wiping motion each time the earbuds are inserted within and drawn out of the receptacle connector, creating a reliable interconnect. Additionally, as shown in FIG. **8**A, in some embodiments an exterior surface **821** of the earbud stem can be flush with an exterior side surface of the earbud contacts. Further, in some embodiments one contact can be arranged to make contact with the earbud first. In one example the contacts can be preloaded at different heights. This can be useful in some embodiments to ground the earbud first before making an active electrical connection with it.

Now referring to FIG. **8**C an exploded view of receptacle connector **800** is shown illustrating how it can be coupled to first and second shells **850**, **855** that retain and guide a stem portion of each earbud into case **100** (see FIG. **1**). Contact carrier **840** holds first and second earbud contacts **825**, **830**, respectively, that can be used with a first earbud, and also holds third and fourth earbud contacts that can be used with a second earbud. Contact carrier **840** can be bonded to distal ends **880**, **885** of first and second shells **850**, **855**, respectively, forming a completed shell and receptacle connector assembly. Shell and contact assembly can create a liquid-tight seal as defined herein. Shell and contact assembly **690** can subsequently be assembled into a case, such as case **100** illustrated in FIG. **1**. In some embodiments first and second shells **850**, **855** can be a single shell having two cavities, one cavity for each earbud.

In some embodiments the electrical connector (for example connector **405** in FIG. **4**A) on pair of earbuds **115***a*, **115***b* may not be an annular (e.g., ring shaped) external contact-type connector and can be any other type of electrical connector, such as, but not limited to a pin and socket, a pin and contact pad or a wiping arm and contact pad. In various embodiments one or more contact pads can be located on a vertical portion of the stem portion of the pair of earbuds and a wiping arm can interface with them. In another example an interface connector can be disposed on the ear portion of the earbud housing. A mating connector can be disposed within the case and can interface with the connector when the earbud is placed in its respective cavity. In some embodiments such a connector can be gold plated to minimize corrosion that can occur as a result of being in contact with a user's ear for extended periods of time. In yet further examples wireless inductive charging of the earbuds can be used.

Magnetic Retention of Earbuds

FIGS. **9**A and **9**B illustrate front and rear perspective views, respectively, of one of wireless earbuds **115***a*, **115***b*. As shown in FIGS. **9**A and **9**B, earbuds **115***a*, **115***b* include an external housing having an ear interface portion **903** and a stem portion **910**. Ear interface portion **903** can be formed to fit at least partially within a user's ear and can be non-occluding, as discussed in more detail herein. An aesthetic acoustic mesh **915** can fit on ear interface portion **903** and allow sound to travel from an internal speaker to a user's ear. Some embodiments can have one or more user inputs **955** that can be used to answer a call, pause or mute playback, or perform other functions. The outer housing for pair of earbuds **115***a*, **115***b* can be made from a plastic material including, but not limited to, ABS or a polycarbonate.

Now referring to FIG. **10**, a top view of housing **105** (see FIG. **1**) of case **100** for pair of earbuds **115***a*, **115***b* is illustrated. As shown in FIG. **10**, housing **105** can include multiple retention magnets **905***a*-**905***h* for the earbuds and one or more sensors. Earbuds **115***a*, **115***b* can be inserted in cavities **110***a*, **110***b* and retained in the cavities by the retention magnets **905***a*-**905***h*. Each cavity **110***a*, **110***b* can include a stem section **116***a*, **116***b* and a bud section **117***a*, **117***b*. Earbud retention magnets **905***a*-**905***d* are used to retain first earbud **115***a* and retention magnets **905***e*-**905***h* are used to retain second earbud **115***b*. However, in other embodiments fewer or additional retention magnets **905***a*-**905***h* can be used and the magnets can vary in geometry, size and placement from those depicted.

Lid sensor **220** can be used to detect whether lid **120** (see FIG. **1**) is closed or open. In the embodiments illustrated in FIG. **10**, lid sensor **220** is disposed between cavities **110***a*, **110***b*, but the lid sensor can be located differently in other embodiments. Lid magnets **910***a*, **910***b* can be used for operating the lid (not shown in FIG. **10**), as discussed in more detail below, and in some cases can increase the strength of retention magnets **905***a*-*h*, as also discussed in more detail below. Cross-sectional view A-A is shown in FIG. **11** and illustrates a side view of how earbud **115***a* can be oriented relative to the magnets discussed above.

FIG. **11** illustrates a cross-sectional view of earbud **115***a* in case **100**. As shown in FIG. **11**, earbud **115***a* is secured within cavity **110***a* in housing **105**. In some embodiments earbud **115***a* can have a speaker magnet **325** and/or a magnetic plate **330** positioned to align with earbud retention magnets **905***f* and **905***h*. Speaker magnet **325** and/or magnetic plate **330** can be attracted to one or more earbud retention magnets **905***f* and **905***h* and one or both can include a magnetic material.

As defined herein, a magnetic material is any material that is capable of being attracted by or acquiring the properties of a magnet to attract magnetic materials. This includes ferromagnets (i.e., magnets including iron) as well as non-ferrous magnets. Some example magnetic materials are, but are not limited to: neodymium, steel, nickel, cobalt, and alnico, an aluminum-nickel-cobalt alloy, some alloys of rare earth metals, and some naturally occurring minerals such as lodestone. In comparison, a magnet is a magnetic material that is magnetized so it attracts a magnetic material.

In one embodiment magnetic plate **330** can include a magnetic material and magnets **905***f* and **905***h* can be oriented and positioned to be within a distance to attract the magnetic plate with sufficient force to retain earbud **115***a* in housing **105** even if the housing is inverted or shaken. However, the strength of retention magnets **905***f*, **905***h* can be selected to allow a user to grasp earbud **115***a* with their fingers and remove it from housing **105** by applying a force greater than the force of magnetic retention. In further embodiments one or more of retention magnets **905***f*, **905***h* can be positioned and oriented to attract speaker magnet **325** which can assist with attracting earbud **115***a* into housing **105** and retaining it. In other embodiments, an earbud ejection mechanism can be included in the case. For example, a mechanical ejector that pushes the earbuds out when the lid is opened (or when an ejection button is pushed).

In some embodiments additional magnets such as those depicted in FIG. **10** can be used to augment the attraction and retention forces imparted on magnetic plate **330** and/or speaker magnet **325**. More specifically, lid magnet **910***b* can be used to attract lid **120** (or a magnetic material **1105** disposed within the lid) and can also be used as a part of a Halbach array to augment the magnetic field of earbud retention magnets **905** to attract earbud **115***a* from a greater distance and to retain it more securely. A Halbach array is a special arrangement of permanent magnets that augments the magnetic field on one side of the magnetic array while

cancelling the field to near zero on the other side. Retention magnets **905***e*, **905***f* and **905***g* (see FIG. **10**) can also be used as a part of the Halbach array.

Now referring to FIG. **12**, a cross-sectional view B-B of housing **105** is shown from FIG. **10**. As shown in FIG. **12** three earbud retention magnets **905***e*, **905***f* and **905***g* are disposed within housing **105** to secure earbud **115***a* within its cavity. In some embodiments, magnets **905***g* and **905***e* can have an angled upper surface to partially conform to the circular shape of ear interface portion **805** of earbud **115***a*. Any configuration or arrangement of magnets can be used to attract speaker magnet **325** and/or magnetic plate **330**. In some embodiments a carrier **920** can be formed to retain and position one or more of retention magnets **905***a*-**905***h*.

Also, as described above with respect to FIG. **3**, the magnetic plate **330** in each earbud can be positioned direction adjacent to the earbud housing and be contoured to match the curvature of the housing (as shown in FIGS. **11** and **12**) to ensure a minimum distance between the magnetic plate and the housing across the surface are of the magnetic plate and increase the magnetic attraction between the housing magnetic components and magnetic plate **330** using minimal magnetic material. Similarly, some or all of the housing magnetic components **905***a*-**905***h* can be disposed as close as possible to an appropriate surface of the earbud case and contoured in shape to match the surface.

Magnetically Actuated Case

FIGS. **13**-**21** illustrate case **1300** having a lid with a magnetically actuated over center position and several example magnet geometries. As shown in FIG. **13**, case **1300** can be similar to case **100** illustrated in FIG. **1** and used to retain a pair of earbuds, however case **1300** can be used for myriad other purposes such as, for example, but not limited to, a container for storing medicine, a container for storing cigars or a recharging container for a miniature portable media player.

Now referring simultaneously to FIGS. **13** and **14**, in some embodiments case **1300** can include a housing **1305** having a receiving opening **1301**, a bottom face **1302** disposed opposite of the receiving opening. Similar to the cases discussed above, case **1300** can have a closed position, illustrated in FIG. **13** where a housing **1305** is covered by a lid **1310** that is pivotally coupled to the housing. Case **1300** can also have an open position, illustrated in FIG. **14** where lid **1310** is pivotally displaced from housing **1305** by an angle theta. Case **1300** can further include an upper wall **1303** opposite a lower wall **1304** and a first sidewall **1306** opposite a second sidewall **1307** where the walls extend between receiving opening **1301** and bottom face **1302** defining a cavity **1308** that communicates with receiving opening **1301**. Receiving opening **1301** can be further defined by four wall ends **1309***a*, **1309***b*, **1309***c* and **1309***d* including ends of upper wall **1303**, lower wall **1304**, first sidewall **1306** and second sidewall **1307**, respectively.

A first pair of magnetic elements **1315***a*, **1315***b* can be oriented such that they repel one another and are disposed proximate pivotable joint **1317** with first magnetic element **1315***a* of the first pair disposed within housing **1305** and a second magnetic element **1315***b* of the first pair disposed within lid **1310**. In some embodiments first pair of magnetic elements **1315***a*, **1315***b* can both be magnets. A second pair of magnetic elements **1320***a*, **1320***b* are oriented such that they attract one another and are disposed proximate to a wall end **1309***a* opposite pivotable joint **1317** with a first magnetic element **1320***a* of the second pair of magnetic elements disposed within housing **1305** and a second magnetic element **1320***b* of the second pair of magnetic elements disposed within lid **1310**. In some embodiments both magnetic elements **1320***a*, **1320***b* can be magnets while in another embodiment one of the magnetic elements can be a magnet while the other element is a magnetic material.

In some embodiments case **1300** can be configured to create an over center configuration for lid **1310** where the lid is in a first stable position when in the closed position (illustrated in FIG. **13**) and is in a second stable position when in the open position (illustrated in FIG. **14**), but is in an unstable position in-between the closed position and the open position. In some embodiments this can be achieved by the attractive forces between second pair of magnetic elements **1320***a*, **1320***b* over powering the repulsive forces of first pair of magnetic elements **1315***a*, **1315***b* when lid **1310** is transitioned from the open position to the closed position. This condition can be explained graphically as illustrated in FIG. **15**.

In some embodiments any of the magnetic arrangements disclosed herein can be arranged in a multipole configuration to concentrate the magnetic field within and between the magnets. In some embodiments a multipole can be used for magnetic elements **1320***a* and **1320***b* where **1320***a* has a north end adjacent a south end and **1320***b* has a south end that attracts to **1320***a*'s north end, and has a north end that attracts to **1320***a*'s south end. In other embodiments any other arrangement can be used. A multipole arrangement can be beneficial to attenuate magnetic fields outside of the case so they don't negatively interact with other magnetic objects such as cards with magnetic strips on them.

FIG. **15** illustrates a graph of the magnetic forces on lid **1310**. As shown in FIG. **13**, lid **1310** has an over center position due to forces imparted on it from two pairs of magnetic elements. As discussed above, first pair of magnetic elements **1315***a*, **1315***b* (see FIGS. **13** and **14**) are oriented to have repulsive forces which are shown as the line on the graph labeled $F_{Repulsion}$. Similarly, second pair of magnetic elements **1320***a*, **1320***b* are oriented to have attractive forces which are shown as the line on the graph labeled $F_{Attraction}$. From examination of FIG. **14** it can be seen than an angle of theta=0° is when lid **1310** is closed and an angle of theta=180° is when the lid is fully open (e.g., pivotally displaced from housing **1305** to its maximum extent). At some angle labeled X° is an over center position for lid **1310** where it is unstable and it will "automatically" (i.e., through magnetic attraction) move either towards the closed position or the open position.

Continuing to refer to FIG. **15**, at an angle of 0° lid **1310** is closed and the attractive forces ($F_{Attraction}$) of second pair of magnetic elements **1320***a*, **1320***b* are greater than the repulsive forces ($F_{Repulsion}$) of first pair of magnetic elements **1315***a*, **1315***b* so the lid is secured in the closed position. In some embodiments, even if first pair of magnetic elements **1315***a*, **1315***b* and second pair of magnetic elements **1320***a*, **1320***b* have the same strength, the over center design will work since the leverage the first pair of magnetic elements has on the pivotable joint is less than the leverage the second pair of magnetic elements has on the pivotable joint. More specifically, since first pair of magnetic elements **1315***a*, **1315***b* are closer to the pivotable joint it will apply less torque to lid **1310** than second pair of magnetic elements **1320***a*, **1320***b*.

However, as lid **1310** transitions to greater angles of theta (i.e., when transitioning to an open position), second pair of magnetic elements **1320***a*, **1320***b* moves apart from one another faster than first pair of magnetic elements **1315***a*, **1315***b*. Since magnetic forces vary exponentially with distance, the $F_{Attraction}$ falls much faster than $F_{Repulsion}$, there-

AliveCor, Inc. Exhibit 1019
IPR2023-00948
Ex. 1019.55

fore at some angle of X° the $F_{Repulsion}$ overcomes the $F_{Attraction}$ and the lid will be attracted to the open position. When transitioning from the open position to the closed position the reverse happens and after the over center point is reached the lid will be attracted to the closed position.

In some embodiments first pair of magnetic elements **1315***a*, **1315***b* can be configured to stop lid **1310** from fully opening (i.e., where theta is 180°). In some embodiments first pair of magnets **1315***a*, **1315***b* can be configured to be repulsive, therefore in such embodiments the magnetic elements could be elongated such that when lid **1310** rotates close to the 180° open position first pair of magnetic elements **1315***a*, **1315***b* repel each other such that the weight of the lid is supported by their repulsive force and the lid is essentially suspended in a semi-open position. Some shapes of magnets such as an "L" can be used to enhance the forces to support lid **1310** in a semi-open position. In various embodiments the force vector of first pair of magnetic elements **1315***a*, **1315***b* can be adjusted to increase or decrease this effect, as discussed in more detail below.

In some embodiments case **1300** can be designed to have a particular feel for a user. For example, in one embodiment case **1300** can be designed so a user can hold case **1300** in their hand in the closed position and by snapping their wrist lid **1310** will snap open and remain in the open position without resting against housing **1305**. In further embodiments lid **1310** can be in the open position and the user can snap their wrist and close the lid. In further embodiments a user can use their hand to try to open lid **1310** and once the lid has been moved a certain distance the lid will snap or spring open. In further embodiments a user can grasp lid **1310** and move it towards the closed position and at a certain distance the lid will snap or spring closed.

Now referring to FIG. **16** another embodiment of a case **1600** with a magnetically actuated lid **1604** is illustrated. As shown in FIG. **16**, case **1600** has one pair of magnetic elements having misaligned poles (i.e., force vectors) and another pair of magnetic elements having a high permeability material used to increase magnetic forces. Similar to previous embodiments, lid **1604** is pivotally attached to housing **1603**. However, in this case first pair of magnetic elements **1605***a*, **1605***b* are oriented so the force vectors are not directly aligned as illustrated by the arrows. In this scenario, lid **1604** can still have an over center position, however the $F_{Repulsion}$ from first pair of magnetic elements **1605***a*, **1605***b* will be less than the scenario illustrated in FIG. **13**. However, one feature of such a misalignment of force vectors can be used to resist lid **1604** from transitioning to a 180° fully open position. More specifically, magnetic forces from first pair of magnetic elements **1605***a*, **1605***b* can resist lid **1604** from going to the closed position, but can also resist lid from going to the 180° open position. Other variations of misaligned magnetic force vectors can be used and are within the scope of this disclosure.

Continuing to refer to FIG. **16**, second pair of magnetic elements **1610***a*, **1610***b* can have a high permeability material **1615***a*, **1615***b* at least partially surrounding them to increase the forces of attraction between the second pair of magnetic elements. A high permeability material as discussed herein can be any material with a relatively high permeability. The permeability of a material is the measure of the material's ability to support the formation of a magnetic field within itself. More specifically, it is the degree of magnetization that a material obtains in response to an applied magnetic field. Thus, the more "magnetically conductive", or the less resistant a material is to magnetic fields, the higher its permeability. Following this behavior, high permeability material **1615***a*, **1615***b* as discussed herein can essentially re-direct the magnetic fields from second pair of magnetic elements **1610***a*, **1610***b* so the attractive forces are increased. High permeability materials can also be used on repulsive magnets, lid magnets or magnets used to attract and secure earbuds within the case.

FIG. **17** illustrates another embodiment of a case **1700**. As shown in FIG. **17**, case **1700** has springs attached to the first and second pairs of magnetic elements to change the over center behavior of the lid. Case **1700** can have a first pair of magnetic elements **1705***a*, **1705***b* configured to be repulsive and a second pair of magnetic elements **1710***a*, **1710***b* configured to attract. However, in this embodiment springs **1707***a*, **1707***b* can be attached to first pair of magnetic elements **1705***a*, **1705***b* and springs **1717***a*, **1717***b* can be attached to second pair of magnetic elements **1710***a*, **1710***b*. Springs **1707***a*, **1707***b*, **1717***a*, **1717***b* can be used to change the over center position and behavior of lid **1704**. For example, when in the closed position, first and second magnetic elements **1705***a*, **1705***b* can repel each other and compress springs **1707***a*, **1707***b*, relieving some of the repulsive forces. Conversely, while in the closed position second pair of magnetic elements **1710***a*, **1710***b* can be attracted closer together resulting in higher attractive forces since springs **1717***a*, **1717***b* allow the magnetic elements to move closer together. Other configurations of springs can be used with magnetic elements without departing from this disclosure.

Now referring to FIGS. **18-21**, various magnet geometries can be used in the cases discussed above. These are only examples, and other geometries can be used without departing from the disclosure. FIG. **18** shows a square bar **1800**, while FIG. **19** shows a rectangular bar **1900**. FIG. **20** shows an "L" shaped bar **2000** while FIG. **21** shows a cylindrical bar **2100**.

Spring Actuated Case

Now referring to FIGS. **22**A-**22**D a case and a spring actuated hinges are illustrated. As shown in FIG. **22**A, case **2200** has a lid **2210** with a spring actuated over center mechanism **2220**. Case **2200** can be similar to case **100** illustrated in FIG. **1** and case **1300** illustrated in FIG. **13** and in some embodiments can used to store and charge a pair of earbuds or other type of portable listening device. In other embodiments, however case **2200** can be used to store a variety of other objects different than portable listening devices.

Similar to the cases discussed above, case **2200** can have a closed position, illustrated in FIG. **22**A where a housing **2205** is covered by a lid **2210** that is pivotally coupled to the housing. Case **2200** can also have an open position, illustrated in FIG. **22**D where lid **2210** is pivotally displaced from housing **2205**. A spring actuated over center mechanism **2220** is shown in more detail in the expanded view in FIG. **22**A. Lid **2210** includes an extension **2225** attached to the lid and disposed on an opposite side of pivotable joint **2230** from the lid. That is, when lid **2210** rotates about pivotable joint **2230**, extension **2225** also rotates about the pivotable joint. Extension **2225** has a rounded distal end **2226** that is in contact with a spring loaded arm **2235** such that the lid resists rotating from the open position to the closed position until the lid is moved past an over center position (illustrated in FIG. **22**C) when the lid is then impelled to the closed position (illustrated in FIG. **22**D).

Spring loaded arm **2235** is attached to a second pivotable joint **2240** at a first end and extends to a distal tip **2245**. Spring loaded arm **2235** can have a rounded distal tip **2245** with a first and second surface **2246**, **2247**, respectively

arranged opposite each other and extending between the distal tip and the first end. In the illustration in FIG. **22**A, spring loaded arm **2235** has a rotational force from a torsion spring applying a clock-wise torque. As lid **2210** is moved towards the open position, extension **2225** rotates in a clock-wise direction about pivotable joint **2230**, slides along a first portion **2248** of first surface **2246**, and forces arm **2235** in a counter-clock-wise direction increasing the clock-wise torque on the arm. Thus, spring loaded mechanism **2220** resists lid **2210** transitioning from the closed position (illustrated in FIG. **22**A) towards the open position (illustrated in FIG. **22**D.)

FIG. **22**B illustrates an isometric view of spring loaded mechanism **2220**. As shown in FIG. **22**B, spring loaded mechanism **2220** includes a spring loaded arm **2235**, extension **2225**, torsion spring **2250** and spring stop **2255**. Torsion spring **2250** is formed around a pin of second pivotable joint **2240**, however in other embodiments a different configuration for the mechanism can be used including, but not limited to, cantilevered springs and coil springs.

FIG. **22**C illustrates case **2200** with a partially open lid **2210**. As shown in FIG. **22**C, lid **2210** is shown in an over center position where the lid is in a first stable position when in the closed position (illustrated in FIG. **22**A) and is in a second stable position when in the open position (illustrated in FIG. **22**D), but is in an unstable position in-between the closed position and the open position. In some embodiments the over-center performance of lid **2210** can be achieved by extension **2225** having a rounded distal end **2226** that is in contact with arm **2235** that has a clockwise torque applied to it. In various embodiments extension **2225** is oriented perpendicular to first surface **2246** when in the unstable position in-between the closed position and the open position. In some embodiments arm **2235** and or distal end **2226** can have a lubricant and/or one or more lubricant channels on it to maintain a low coefficient of friction between the parts and to provide smooth actuation.

FIG. **22**D illustrates case **2200** with a fully open lid **2210**. As shown in FIG. **22**D, lid **2210** is past the over-center position and is in a stable open position. In some embodiments the stable position can be achieved by extension **2225** being past the over center location on arm **2235**, with extension **2225** sliding along a second portion **2249** of first surface **2246**, and the arm holding the lid open due to the clock-wise torque applied to the arm by torsion spring **2250** (see FIG. **22**B).

Earbud Case with Wireless Charging Transmitter

Reference is now made to FIG. **23**, which illustrates an earbud case **2300** that includes a wireless power transmitting component **2330** that enables the case to wirelessly charge an accessory electronic device outside of the case instead of within the case. For example, as shown in FIG. **23**, case **2300** is depicted as wireless charging a watch **2301** that is placed over and aligned with wireless power transmitting component **2330**. While FIG. **23** illustrates a watch as the accessory device being charged, embodiments of the disclosure can be used to wirelessly charge other appropriate electronic devices as well. In some instances, embodiments of the disclosure are particularly well suited for use with portable electronic media devices because of their potentially small form factor. As used herein, an electronic media device includes any device with at least one electronic component that can be used to present human-perceivable media. Such devices can include, for example, portable music players (e.g., MP3 devices and Apple's iPod™ devices), portable video players (e.g., portable DVD players), cellular telephones (e.g., smart telephones such as Apple's iPhone devices), video cameras, digital still cameras, projection systems (e.g., holographic projection systems), gaming systems, PDAs, as well as tablet (e.g., Apple's iPad devices), laptop or other mobile computers. Some of these devices can be configured to provide audio, video or other data or sensory output.

In the embodiment illustrated in FIG. **23**, case **2300** can include all or some of the features of case **204** discussed above with respect to FIG. **2** along with a second charging system in which a wireless power transmitting component **2330** is positioned within housing **2335** adjacent to an exterior charging surface **2340**. In some embodiments exterior charging surface **2340** can be any exterior surface of case **2300**. Wireless power transmitting component **2330** can be configured to wirelessly transmit power across housing **2335** to a power receiving coil (not shown in FIG. **23**) of watch **2301** when the watch is positioned outside housing **2335** adjacent to exterior charging surface **2340**, as discussed in more detail below.

As further shown in FIG. **23**, watch **2301** includes a casing **2302** that houses a display **2304** and various input devices including a dial **2306** and a button **2308**. Watch **2301** can be worn on a user's wrist and secured thereto by a band **2310**. Casing **2302** also houses electronic circuitry (not shown in FIG. **23**), including a processor and communication circuitry. A battery (not shown in FIG. **23**) internal to casing **2302** powers watch **2301**. The battery can be recharged by a wireless power transfer system and watch **2301** can include circuitry configured to operate as a receiver in the wireless power transfer system while wireless power transmitter component **2330** is a transmitter in the system. One example of a wireless power transfer system is an inductive power transfer system. In an inductive power transfer system, a power-receiving electronic device includes or otherwise incorporates an inductive power-receiving element configured to wirelessly receive power and/or charge one or more internal batteries. Similarly, a charging device (i.e., power transmitting component) includes or otherwise incorporates an inductive power-transmitting element configured to wirelessly transmit power to the power-receiving electronic device.

FIG. **24** is a block diagram of inductive power receiving system **2400** according to an embodiment of the present disclosure. As shown in FIG. **24**, system **2400** is an inductive power receiving system that can be located within casing **2302** of watch **2301** (see FIG. **23**) or within a different type of electronic accessory that can be charged by wireless power transmitting component **2330**. When power receiving system **2400** is operatively coupled with an appropriate inductive power transmitting component, such as wireless power transmitting component **2330**, battery **2402** within the device can be wirelessly charged. Battery **2402** is operably connected to a receive coil **2404** via power conditioning circuitry **2406**. Receive coil **2404** can be inductively coupled to a transmit coil of a charging device to receive power wirelessly from the charging device and pass the received power to battery **2402** within the electronic device via power conditioning circuitry **2406**. Power conditioning circuitry **2406** can be configured to convert the alternating current received by the receive coil **2404** into direct current power for use by other components of the device. A processing unit **2410** can direct the power, via one or more routing circuits and under the execution of an appropriate program residing in a memory **2412**, to perform or coordinate one or more functions of the electronic device typically powered by battery **2402**.

Now referring to FIG. **25**, case **2300** is illustrated with a pair of earbuds **115***a*, **115***b* stored within a housing **2505** of the case and covered by a lid **2520**. Case **2300** can charge earbuds **115***a*, **115***b* in the same manner as case **100** discussed above (i.e., either with a wired connection or with a wireless power transfer system). Case **2300** can also, however, include an inductive charging system **2525** positioned and configured to charge a different portable electronic device positioned outside of case **2300** instead of within the case. Inductive charging system **2525** can include a wireless power transmitting component to wirelessly charge an auxiliary device such as watch **2301** (see FIG. **23**). In some embodiments case **2500** can be different from case **100** (see FIG. **1**) and can be of any other configuration having one or more cavities and a lid that covers the one or more cavities. In one example lid **2520** can be separable from the case. Inductive charging system **2525** can include wireless charging circuitry within housing **2505** that enables case **2300** to wirelessly recharge a battery, for example, battery **2402** (see FIG. **24**) of watch **2301**.

FIG. **26** is a block diagram of a wireless charging system **2600** according to an embodiment of the disclosure. As shown in FIG. **26**, wireless charging system **2600** includes an inductive power transmitting component **2602**. Inductive power transmitting component **2602** includes a power source **2604**, which can be case battery **227** (see FIG. **2**), operatively coupled to a transmit coil **2606** to transmit power to a wearable device via electromagnetic induction or magnetic resonance.

Transmit coil **2606** can be an electromagnetic coil that produces a time-varying electromagnetic flux to induce a current within an electromagnetic coil within an electronic device (e.g., coil **2404** in FIG. **24**). Transmit coil **2606** can transmit power at a selected frequency or band of frequencies. In one example the transmit frequency is substantially fixed, although this is not required. In another example, the transmit frequency can be adjusted to improve power transfer efficiency for particular operational conditions. More particularly, a high transmit frequency can be selected if more power is required by the accessory and a low transmit frequency can be selected if less power is required by the accessory. In other examples, transmit coil **2606** can produce a static electromagnetic field and can physically move, shift, or otherwise change its position to produce a spatially-varying electromagnetic flux to induce a current within the receive coil.

When watch **2301** (see FIG. **23**) is operatively coupled (e.g., disposed on or adjacent to) case **2300**, the wearable electronic device can receive charge to replenish the charge of its rechargeable battery or to provide power to operating components associated with the electronic device. To facilitate the transfer of electromagnetic energy, transmit coil **2606** can be positioned within the housing of case **2300** (see FIG. **23**) such that it aligns with receive coil **2404** (see FIG. **24**) in watch **2301** along a mutual axis. If misaligned, the power transfer efficiency between transmit coil **2606** and receive coil **2404** (see FIG. **24**) can decrease as misalignment increases. In some embodiments, one or more alignment features can be used to aid the alignment along a mutual axis, including mechanical alignment features (e.g., recesses, ledges, detents) and magnetic features (e.g., alignment magnet **2630**), as discussed in more detail below.

As one example, alignment magnet **2630** can be included in case **2300** that magnetically mates with an alignment magnet (not shown) of watch **2301** to facilitate proper alignment of the case and the wearable electronic device. More specifically, alignment magnet **2630** attracts the mating alignment magnet in watch **2301** such that the wearable device is laterally moved into a particular location and held firmly against an outer surface of the case. Additionally, the top and bottom surfaces of case **2300** and watch **2301**, respectively, can cooperate to further facilitate alignment. For example, in one embodiment a bottom surface of watch **2301** is convex and a top surface of case **2300** is concave, following the same curvature as the bottom surface of the wearable device.

In some embodiments, case **2300** (see FIG. **23**) can also include one or more sensors to determine whether watch **2301** is present and ready to receive transmitted power from the charger. For example, watch **2301** can include an optical sensor, such as an infrared proximity sensor. When watch **2301** is attached to case **2300**, the infrared proximity sensor can produce a signal used to determine the presence of the wearable device. Other methods or structures to verify the presence of watch **2301** can include a mass sensor, a mechanical interlock, switch, button or the like, a Hall-effect sensor, or other electronic sensor.

Some embodiments can include a prioritized charging algorithm to preferentially use the stored charge in case battery **227** (see FIG. **2**) depending on what chargeable devices are coupled to case **2300**. For example charging system **2525** (see FIG. **25**) can be programmed to first recharge earbuds **115***a*, **115***b*, then charge watch **2301**. In another example a user is able to program the charging priority while in another example case **2300** can simply charge any device that is coupled to it. In further examples case **2300** can be coupled to a power source through connector **345** (see FIG. **3**) and can charge one device, preferentially charge multiple devices or simultaneously charge multiple devices.

Some embodiments can have a wired interface for case **2300** charging battery **2402** (see FIG. **24**) and/or for exchanging data with watch **2301**. The wired interface can be in addition to or instead of a wireless interface. For example, in one embodiment case **2300** can include contacts that are sized and positioned to physically and electrically couple to one or more contacts on watch **2301**. The contacts can include one or more power contacts as well as one or more data contacts, such as a pair of differential data contacts. In another embodiment connector **345** (see FIG. **3**) of case can be used to charge watch **2301**.

Wirelessly Charged Case

Now referring to FIG. **27**, a simplified perspective view of case **2700** on a charging station **2705** is illustrated. As shown in FIG. **27**, case **2700** can be similar to other cases in this disclosure, such as case **100** in FIG. **1**, and can be inductively charged by a charging station **2705**. Case **2700** can have a rechargeable battery that can be inductively recharged with a wireless charging system similar to that illustrated and described above with reference to FIGS. **23** through **26**. More specifically, all of the features described above with regard to inductively charged watch **2301** can be employed in inductively charged case **2700**.

Wireless charging station **2705** can include wireless charging circuitry within housing **2710** that enables case **2700** to wirelessly recharge an internal battery. Wireless charging station **2705** can include an inductive power transmitting coil **2715**, that is similar to wireless power transmitting component **2602** described above in FIG. **26**. Inductive power transmitting coil **2715** is capable of transmitting power to case **2700** via electromagnetic induction or magnetic resonance. When case **2700** is operatively coupled (e.g., disposed on or adjacent to) charging station **2705**, the case can receive charge to replenish the charge of its

rechargeable battery or to provide power to operating components associated with the case.

To facilitate the transfer of electromagnetic energy, transmit coil **2715** can be positioned within the housing of charging station **2705** such that it aligns with one or more receive coils **2720** in case **2700** along a mutual axis. If misaligned, the power transfer efficiency between transmit coil **2715** and receive coil **2720** can decrease as misalignment increases. In some embodiments, one or more alignment features can be used to aid the alignment along a mutual axis, including mechanical alignment features (e.g., recesses, ledges, detents) and magnetic features (e.g., alignment magnet), as discussed herein. In further embodiments case **2700** can include more than one receive coil and can detect which receive coil is better aligned and selectively only receive charge from that particular coil. In various embodiments case **2700** can use one or more planar receive coils **2720**, however in other embodiments other receive coil designs can be used.

Waterproof Receptacle Connector

FIGS. **28** and **29** illustrate a liquid-tight electrical connector **2800**. As shown in FIG. **28**, electrical connector **2800** can have mounting flanges and sealed features to make it resistant or impervious to liquid penetration. Electrical connector **2800** can be used to couple power and data to a case, similar to connector **345** in FIG. **3**. In some embodiments connector **2800** can, for example, be any non-proprietary interface such as a USB connector or can be any proprietary interface such as the Lightning connector used by Apple Incorporated of Cupertino, Calif. In various embodiments connector **2800** can be liquid-tight, as discussed in more detail below.

Metallic bracket **2805** is formed around an exterior portion of connector **2800** and has one or more mounting holes **2810** for securing the connector to a circuit board or a chassis. Connector **2800** has a receiving face **2815** that has a front opening (not shown in FIG. **28**, but shown in FIG. **3** for connector **345**) for receiving a plug portion of a mating connector. An interconnection face **2820** contains a plurality of metallic pins **2825** that each connect to an internal electrical contact as described in more detail below. One or more ground pins **2826** can also extend out of interconnection face **2820**. Metallic pins **2825** and ground pins **2826** can be sealed by an overmolded portion **2830** so they are liquid-tight. Metallic bracket **2805** can be two pieces and welded together as described below. Metallic bracket **2805** can also have one or more deformable fingers **2835** that can be used to secure the components of connector **2800** together.

As shown in FIG. **29** connector **2800** includes a contact plate **2980** coupled to a housing **2905** with a gasket to make the connector liquid-tight. Housing **2905** is made from an electrically insulative polymer that extends between receiving face **2815** and a rear face **2910**. Housing **2905** defines a cavity **2915** that communicates with a front opening in receiving face **2815** to receive a plug portion of a mating plug connector. A spacer **2920** is formed from a plastic material and has a plurality of retention features **2925** that are each configured to each receive an electrical contact from a set of electrical contacts **2930** that can be stitched into it. Each electrical contact in the set of electrical contacts **2930**, can include an elongated beam portion **2935** positioned between a contact tip **2940** and an anchor portion **2945**. Each contact tip **2940** is positioned within cavity **2915** so that it can be electrically coupled to a corresponding plug connector contact during a mating event.

Beam portion **2935** allows tip **2940** of each contact to flex slightly downward during a mating event and biases the tip to keep physical and electrical contact with a contact in the plug connector that aligns with the particular receptacle contact. Anchor portion **2945** can be a substantially flat plate with one or more cutouts that fits within a slot **2950** of housing **2905** to secure or anchor the contacts in place. Set of electrical contacts **2930** can further include electrical leads **2955** that extend out of interconnection face **2820** (see FIG. **28**) of connector assembly **2800** that can couple the receptacle connector to a printed circuit board or similar substrate. Each contact in the set of contacts **2930** can also have an alignment portion **2960** adjacent anchor portion **2945** to align the contact structures within slots **2950** of housing **2905**. In some particular embodiments, set of electrical contacts **2930** includes eight contacts spaced apart from each other along a single row.

A ground latch **2965** can be formed from a conductive metal and inserted through ground slots **2970** in spacer **2920**. The ground latch can include first and second spring arms extending along opposing sides of the set of contacts **2930**. The first and second spring arms can latch to retention features of a corresponding plug connector to assist in retaining the plug connector within the receptacle connector **2800** after a mating event. In other embodiments ground latch **2965** can be insert mold within spacer **2920**. Spacer **2920**, with set of contacts **2930** and ground latch **2965**, can then be overmolded with dielectric overmold portion **2975**. Overmold portion **2975** covers a portion of spacer **2920** and the anchor portion of each contact in the set of contacts **2930** forming a liquid-tight seal to leads **2955** and ground latch **2965** and creating an integrated contact plate **2980**. A gasket **2985** can be disposed against rear face **2910** of housing **2905** and contact plate **2980** can then be pressed against the gasket to form a liquid-tight assembly. Metallic bracket **2805** can include a top bracket **2990***a* laser welded to a bottom bracket **2990***b*. Bracket fingers **2835** can be formed to hold contact plate **2980** against housing **2905** such that connector **2800** is liquid-tight. That is, if liquid were to enter receiving opening of connector (see connector **345** in FIG. **3**) the liquid would not be able to pass through the connector and enter case **100**.

Wireless Earbuds

Now referring to FIGS. **30-46**, non-occluding earbuds **3000***a*, **3000***b* and methods for making the same are described and illustrated. As shown in FIGS. **30** and **31** earbuds **3000***a*, **3000***b* can be similar to earbuds **115***a*, **115***b* illustrated in FIG. **1**, however earbuds **3000***a*, **3000***b* can include various other features including in ear sensing and acoustic features as described in more detail below.

FIGS. **30** and **31** show front and rear perspective views, respectively, of a non-occluding left earbud **3000***a* (FIG. **30**) and a non-occluding right earbud **3000***b* (FIG. **31**). Generally, non-occluding earbuds are designed not to form an airtight seal between the ear (or ear canal) and the outer surface of the earbud. By way of contrast, occluding earbuds are generally designed to fit inside of the user's ear canal and form a substantially airtight seal. Each earbud **3000***a*, **3000***b* can include an external housing **3005** having an ear portion **3010** coupled to a stem portion **3015**. Housing **3005** can have an asymmetric shape amenable to in-the-ear retention, but does not form an airtight seal with the user's ear or ear canal. The absence of an airtight seal can benefit from volumes within the earbud being specifically tuned (e.g., by specifically shaping the volumes and/or adding material to the volumes) to achieve a desired frequency response. Ear portion **3010** can include a directional sound port **3020** offset with respect to a center axis of the ear bud. Directional sound

port **3020** can be designed to direct sound waves from an internal driver (e.g., part of an earbud speaker, not shown in FIGS. **30** and **31**) directly into a user's ear canal.

In addition, secondary apertures in the earbud can be employed in housing **3005** to achieve desired sound performance. For example, one or more secondary apertures can serve as a controlled leak port to expose an acoustic pressure within the earbud to the external, surrounding environment. In this aspect, the secondary apertures can be calibrated to modify an acoustic response of the earbud. In this embodiment earbuds **3000***a*, **3000***b* each include a front leak port **3025** and a multiport **3030** formed in ear portion **3010**. Multiport **3030** can include both a rear vent **3035** and a bass port **3040**, that will be described in more detail below. In addition, earbuds according to embodiments of this disclosure can be constructed to have a seamless finish even though two or more parts are joined together to form part of the earbud.

Ear portion **3010** of earbuds **3000***a*, **3000***b* can also include one or more "in the ear" sensors to assist each earbud **3000***a*, **3000***b* in determining whether or not the earbud is in a user's ear. In one embodiment an optical tragus sensor **3045** is configured to sense the presence or absence of a user's tragus, and an optical concha sensor **3050** is configured to sense the presence or absence of a user's concha. Tragus and concha sensors **3045**, **3050**, respectively, can use any type of optical sensor including, but not limited to an LED or vertical cavity surface emitting laser (VCSEL) device. Further embodiments can include one or more capacitive sensors and/or accelerometers to detect the presence of a user's ear and/or earbud orientation, as described in more detail below. In the ear detection can be useful for features such as, but not limited to, determining which earbud **3000***a*, **3000***b* to use as a microphone when a user desires to accept a call and when a user stops using one earbud and starts using the other earbud.

A distal end **3055** of stem portion **3015** of each earbud **3000***a*, **3000***b* can include an electrical connector **3060** that is formed to make contact with a corresponding connector (e.g., a receptacle connector) of a charging station and/or earbud charging case, such as one of the connector structures described in FIGS. **4**A-**8**C. In one particular embodiment, each connector **3060** can include first and second contacts spaced apart from each other in an oppositional and symmetrical relationship, such as partially annular earbud contacts **610** and **615** shown in FIG. **6**B. Each of the first and second contacts can include an outer perimeter that is flush with an exterior surface of the stem portion and include an arcuate or other curved surface that creates a strong wiping action during a contact mating event. Electrical connector **3060** can be used to recharge an internal battery within each earbud **3000***a*, **3000***b* and in some cases can also be used to transfer data to and from each earbud. Distal end **3055** can also include a bottom microphone port **3065** (e.g., microphone aperture **635** illustrated in FIG. **6**B) that works in conjunction with a top microphone port **3070** to receive a user's voice and/or perform noise cancellation.

FIGS. **32** and **33** illustrate partial cross sections of earbuds **3000***a*, **3000***b*. As shown in FIG. **32**, earbuds **3000***a*, **3000***b* include a driver **3205**, an acoustic insert **3220**, a flexible circuit **3225**, an antenna **3330**, a rechargeable battery **3335** and an electrical connector **3060**. Driver **3205** is located within ear portion **3010** and defines a front acoustic volume **3210** in front of the driver and a rear acoustic volume **3215** behind the driver. Driver **3205** can include an electromagnetic voice coil, a driver magnet and a speaker diaphragm (not shown in FIG. **32**). Acoustic insert **3220** is positioned behind driver **3205** and adhered to housing **3005**, as described in more detail below. Ear portion **3010** further includes a folded up portion of a flexible circuit **3225** that can contain one or more sensors, controllers and myriad other circuits for operating earbud **3000***a,b*. Flexible circuit **3225** can include portions that are flexible as well as portions that are not flexible, such as multilayer epoxy and glass composite circuit boards and can further couple the myriad electronic systems of earbud **3000***a*, **3000***b* together, as described in more detail below.

Stem portion **3015** of earbud **3000***a*, **3000***b* can include an antenna **3330**, a rechargeable battery **3335** and electrical connector **3060**. A portion of flexible circuit **3225** can extend down and electrically connect to electrical connector **3060**.

As shown in FIG. **33**, earbuds **3000***a*, **3000***b* include several internal sensors. In FIG. **33** some internal components of earbud **3000***a*, **3000***b* have been removed for clarity. Ear portion **3010** can contain a tragus sensor **3045**, a concha optical sensor **3050** and an accelerometer **3315** that can work together to determine whether earbud **3000***a*, **3000***b* is in a user's ear. Flexible circuit **3225** (see FIG. **32**) can be used to electrically couple all these devices together.

Foldable, Flexible Circuit

FIGS. **34** and **35** illustrate simplified views of flexible circuit **3225**. As shown in FIG. **34**, flexible circuit **3225** is shown in a flat pattern. FIG. **35** shows flexible circuit **3225** folded up as it is installed in earbud **3000***a*, **3000***b* as shown in FIG. **32**. Now referring simultaneously to FIGS. **34** and **35** the various portions of flexible circuit **3225** are described. A concha portion **3405** can be used to attach to and communicate with optical concha sensor **3050** (see FIG. **33**). Towards this purpose, concha portion **3405** can include one or more electrical terminals that can be bonded to contacts of optical concha sensor **3050**.

Processor portion **3410** can include one or more central processing units, controllers and passives. Processor portion **3410** can be a rigid portion of flexible circuit **3225** and can include multiple stacked routing layers. In one embodiment processor portion can have 4, 6, 8 or 10 routing layers.

An accelerometer portion **3415** can include one or more accelerometers to assist in detecting a position and/or orientation of the earbud, to assist in acting as a microphone that may be used to mitigate wind noise and to function as a user input device recognizing a tap or touching sequence on the earbud housing. A top microphone portion **3420** can be used to attach to and communicate with a top microphone through one or more electrical terminals. A tragus sensor portion **3430** can be used to attach to and communicate with optical tragus sensor **3045** (see FIG. **33**) through one or more **3430** formed within portion, and a bottom microphone portion **3435** can be used to attach to and communicate with a bottom microphone through one or more terminals formed within portion **3435**.

Each of the flexible portions **3440** can be sufficiently flexible to fold up flexible circuit **3225** as illustrated in FIG. **35**. Further, each of the flexible portions **3440** can include one or more electrical traces that route electrical signals between different components of flexible circuit **3225**. For example, flexible portion **3440** between concha portion **3405** and processor portion **3410** can include one or more electrical traces that run between the concha portion terminals and the processor. Similarly, flexible portion **3440** between bottom microphone portion **3435** can include one or more electrical traces that run between the bottom microphone terminals and the processor.

Earbud Connectors

FIGS. **36-41** illustrate several embodiments of earbud connectors that can be used in the distal end of a stem portion of each earbud such as connector **3060** in FIG. **30**. As shown in FIG. **36**, connector **3600** can be affixed to a distal end **3055** of an earbud **3000***a*, **3000***b* and be used to couple charging and data signals to the earbuds. Connector **3600** can be mated with receptacle connectors that can be disposed in a case or docking station such as the receptacle connectors disclosed in FIGS. **4**A-**8**C.

Connector **3600** is illustrated in FIG. **36** in a partially assembled state before it is attached to a distal end **3055** of a stem portion **3015** of earbud **3000***a*, **3000***b*. In this embodiment connector **3600** includes an inner circular metallic contact **3610** and an outer circular metallic contact **3615** with a dielectric ring **3620** separating the two contacts. In various embodiments inner circular contact **3610** can have an aperture **3613** within it that can be used for both a receptacle connector contact surface and an aperture for a microphone. In some embodiments inner and outer circular contacts **3610**, **3615**, can be separately manufactured components and can be made from a metal or alloy that can have one or more layers of plating, as described in more detail below. In various embodiments inner and outer circular contacts **3610**, **3615**, can be made from a copper or copper-based alloy such as, but not limited to C5212 phosphor bronze. In some embodiments inner and outer circular contacts **3610**, **3615**, can be individually machined, cast or metal injection molded. In further embodiments they can be made from an electrically conductive plastic or made from an insulative plastic that is plated with one or more metals or alloys.

As shown in FIG. **37**, connector **3600** includes inner and outer circular contacts **3610**, **3615**, respectively that can be manufactured as separate components. In one example inner and outer circular contacts **3610**, **3615**, include one or more ridges **3625** to enable increased retention force to dielectric ring **3620**. To electrically couple inner and outer circular contacts **3610**, **3615**, to earbuds **3000***a*, **3000***b* the contacts can each include coupling tabs. More specifically inner circular contact **3610** can have a first coupling tab **3630** for attaching to a portion of flexible circuit **3225** (see FIGS. **34-36**). In some embodiments first coupling tab **3630** is soldered to a metallized pad **3635** (see FIG. **36**) on flexible circuit **3225**, however in other embodiments it can be attached with a conductive epoxy or other method. Outer circular contact **3615** can have a second coupling tab **3640** for attaching to a portion of flexible circuit **3225** similar to the aforementioned process.

As described above, outer circular contact **3615** can have an arcuate cross-section to facilitate wiping of a mating contact to provide a reliable interconnect with a receptacle connector. Inner circular contact **3610** can also have an arcuate or sloped cross-section to promote contact wiping with a receptacle connector. In some embodiments inner and outer circular contacts **3610**, **3615**, can be plated with one or more metals that can prevent oxidation of the contact surface for reduced interconnect resistance and in further embodiments the plating can be used to provide an aesthetically appealing appearance, as described in more detail below.

In various embodiments inner and outer circular contacts **3610**, **3615**, can be plated first with a layer of nickel followed by a final layer of gold. In some embodiments inner and outer circular contacts **3610**, **3615**, can be plated with a first layer of copper between 3 and 5 microns thick, followed by a layer of gold between 0.5 and 0.7 microns thick, followed by a layer of gold between 0.1 and 0.2 microns thick, followed by a layer of palladium between 0.5 and 0.8 microns thick, followed by a layer of gold between 0.1 and 0.2 microns thick, followed by a binary alloy layer including a first element and a second element, between 0.7 and 1.0 microns thick.

In some embodiments inner and outer circular contacts **3610**, **3615**, can be plated with a first layer of copper between 3 and 4.5 microns thick, followed by a layer of gold between 0.5 and 0.9 microns thick, followed by a layer of palladium between 0.5 and 0.8 microns thick, followed by a layer of gold between 0.1 and 0.2 microns thick, followed by a binary alloy layer including a first element and a second element, between 0.65 and 1.0 microns thick.

In these and other embodiments of the present invention, the first element of the binary alloy layer may be an element in a first group consisting of platinum, palladium, iridium, osmium and rhodium. In these and other embodiments of the present invention, the first element may be rhodium.

In these and other embodiments of the present invention, the second element of the binary alloy layer may be an element in a second group consisting of platinum, palladium, iridium, osmium, and ruthenium. In these and other embodiments of the present invention, the second element may be ruthenium.

In these and other embodiments of the present invention, the first element may comprise approximately 85 weight percent of the binary alloy while the second element may comprise approximately 15 weight percent of the binary alloy. In these and other embodiments of the present invention, the first element may comprise approximately 90 weight percent of the binary alloy while the second element may comprise approximately 10 weight percent of the binary alloy. In these and other embodiments of the present invention, the first element may comprise approximately 95 weight percent of the binary alloy while the second element may comprise approximately 5 weight percent of the binary alloy. In these and other embodiments of the present invention, the first element may comprise approximately 99 weight percent of the binary alloy while the second element may comprise approximately 1 weight percent of the binary alloy. In these and other embodiments of the present invention, the first element may comprise more than or approximately 99.5 weight percent of the binary alloy while the second element may comprise less than or approximately 0.5 weight percent of the binary alloy.

In some embodiments a combination of rhodium and ruthenium for the binary alloy can be used to prevent oxidation of the contact surface while providing an aesthetically appealing gray or silver appearance. Other combinations and compositions of plating are within the scope of this disclosure. In yet further embodiments first and second coupling tabs **3630**, **3640** can be masked before the final layer of the binary alloy, leaving them with a gold surface for improved solderability.

After inner and outer circular contacts **3610**, **3615** are plated they can be insert molded to form a connector **3600** as shown in FIG. **38**. A dielectric ring **3620** can be molded in-between and around portions of inner and outer circular contacts **3610**, **3615**, and can be used to form one or more attachment tabs **3655** that assist connector **3600** being attached to earbud **3000***a*, **3000***b* as illustrated in FIG. **36**.

Now referring to FIGS. **39** and **40** perspective views of connector **3900** are illustrated. As shown in FIGS. **39** and **40**, connector **3900** is similar to connector **3600** illustrated in FIG. **36**, however connector **3900** includes two semicircular contacts instead of circular inner and an outer contacts. An end view of connector **3900** is similar to the end view of

connector **605** illustrated in FIG. **6**B. Connector **3900** includes a first semicircular contact **3910** and a second semicircular contact **3915** with a dielectric layer **3920** separating the two contacts. First and second semicircular contacts **3910**, **3915**, respectively, can be spaced in an oppositional and symmetrical relationship with each other. In various embodiments first and second semicircular contacts **3910**, **3915**, respectively, can form an aperture **3913** between them that can be used for both a receptacle connector contact surface and an aperture for a microphone. First and second semicircular contacts **3910**, **3915**, respectively, can be manufactured and plated using the same processes described above with regard to connector **3600**.

To electrically couple first and second semicircular contacts **3910**, **3915**, respectively, to earbud **3000***a*, **3000***b* they can each include coupling tabs similar to connector **3600**. More specifically first semicircular contact **3910** can have a first coupling tab **3930** for attaching to a portion of flexible circuit **3225** (see FIGS. **34-36**). Second semicircular contact **3915** can have a second coupling tab **3940** for attaching to a portion of flexible circuit **3225** similar to the aforementioned process.

After first and second semicircular contacts **3910**, **3915**, respectively, are plated they can be insert molded to form a connector **3900** as shown in FIG. **40**. A dielectric layer **3920** can be molded in-between and around portions of first and second semicircular contacts **3910**, **3915**, respectively, and can be used to form one or more attachment tabs **3955** that assist connector **3900** being attached to earbud **3000***a,b* as illustrated in FIG. **36**.

Capacitive Sensor Insert

FIG. **41** illustrates a simplified perspective view of earbud **4100**. As shown in FIG. **41**, earbud **4100** includes a housing **4105** and a capacitive sensor insert **4110** that can sense a user's touch on exterior surface **4115** of the housing. Capacitive sensor insert **4110** has sensor circuitry **4120** that can create one or more capacitive sensors, as explained in more detail below. For example, sensor circuitry **4120** can create a first capacitive sensor in region **4125** on exterior surface **4115** of housing **4105** that can be used to detect the touch of a user's ear for in the ear sensing and can create a second capacitive sensor in region **4130** that can be used to detect the touch of a user's finger to answer a call or to perform any other function.

FIG. **42** illustrates a simplified cross-section of earbud housing **4104**. As shown in FIG. **42**, housing **4105** includes a capacitive sensor insert **4110** positioned within a cavity **4205** defined by the housing. Cavity can also house one or more other components of the earbuds **3000***a,b*. Earbud housing **4105** has at least one touch sensitive region **4125**, **4130** at exterior surface **4115** of the housing that is formed by capacitive sensor insert **4110**. Housing **4105** has an interior surface **4210** within cavity **4205**, opposite exterior surface **4115**. Capacitive sensor insert **4110** has a first surface **4215** with metalized sensor circuitry **4120** (see FIG. **41**) that is positioned adjacent interior surface **4210** of housing **4105**. Capacitive sensor insert **4110** has a second surface **4220** that is opposite first surface **4215**.

FIGS. **43** and **44** illustrate simplified plan views of capacitive sensor inserts **4300**, **4400**, respectively. As shown in FIGS. **43** and **44**, different types of circuitry can be used to form the capacitive sensors, for example in FIG. **43** self-capacitance circuitry can be used and in FIG. **44** mutual-capacitance sensor circuitry can be used.

Now referring to FIG. **43**, a plan view of sensor insert **4300** is illustrated. As shown in FIG. **43**, sensor insert **4300** has self-capacitance sensor circuitry **4305** that senses the touch of a user (e.g., the user's ear and/or finger) on exterior surface **4115** (see FIG. **42**) of housing **4105**. The user's touch loads the self-capacitance circuitry and/or increases the parasitic capacitance to ground which is interpreted by the sensor insert **4300** and communicated to the earbud processor. Sensor circuitry **4305** can have one or more interconnect regions **4310**, for example solder pads or plated through holes, that allow it to be coupled to an earbud processor with one or more conductors.

In one embodiment sensor insert **4300** can be formed from a plastic that includes metallic particulates. A laser can then be used to laser activate regions **4315** on first surface **4320** of sensor insert **4300**, that correspond to the desired location of sensor circuitry **4305**. The laser activated regions can then be metallized in a plating bath. In one example metal circuitry can be plated on to the activated regions forming sensor circuitry **4305**. This process may be known in the art as laser direct structuring. Other methods can be used for form sensor insert **4300** without departing from this disclosure. For example in another embodiment a flexible circuit can be adhered to first surface **4320** of sensor insert and used as the sensor circuitry. In another example first surface **4320** can be entirely plated and can be etched using a photo-imagable ink.

In further embodiments sensor insert **4300** can have one or more acoustic apertures **4325** that allow sound to pass through and can be aligned with a sound port of the earbuds. In some embodiments insert **4300** can be formed in a hemispherical or other shape to closely match a shape of the external earbud housing. Additionally, in some embodiments, sensor circuitry **4305** can fully surround or partially surround the acoustic apertures.

Now referring to FIG. **44**, a plan view of sensor insert **4400** is illustrated. As shown in FIG. **44**, sensor insert **4400** has mutual-capacitance sensor circuitry **4405** that senses the touch of a user (e.g., the user's ear and/or finger) on exterior surface **4115** (see FIG. **42**) of housing **4105**. The user's touch alters the mutual coupling between row and column electrodes **4410**, which are scanned sequentially and communicated to the earbud processor. Sensor circuitry **4405** is formed on first surface **4407** of sensor insert **4400** and can have one or more interconnect regions **4415**, for example solder pads or plated through holes, that allow it to be coupled to earbud processor with one or more conductors.

As described above with regard to sensor insert **4300** in FIG. **43**, sensor insert **4400** can be manufactured in the same way and can have similar features and functions. Additionally, in some embodiments sensor insert **4400** can include one or more acoustic apertures **4425** that allow sound to pass through sensor circuitry **4305** and at least some of sensor circuitry **4405** can fully surround or partially surround the acoustic apertures. Additionally, in some embodiments sensor insert **4400** can be formed in a hemispherical or other shape to closely match a shape of the external earbud housing.

Acoustic Insert

FIG. **45**A illustrates a simplified rear perspective view of earbud **3000***a*. As shown in FIG. **45**A, earbud **3000***a* includes an acoustic insert **4505** (shown in dashed lines within housing **3005** and in solid lines outside of the housing) that can be used to provide venting for driver (e.g., speaker) in earbud **3000***a*. More specifically, acoustic insert **4505** can be used to assist in forming a bass port **3040** and a rear vent **3035**, that combine into a multiport **3030**. In some embodiments, certain features of acoustic insert **4505** can be useful for forming acoustic vents in a relatively small and confined area such as an earbud housing.

Earbud **3000***a* can have multiple acoustic apertures, some of which are shown in FIG. **30**. In addition to bass port **3040**, rear vent **3035** and multiport **3030**, each earbud can also have a directional sound port **3020** and a front leak port **3025**. These apertures can provide venting for the driver, sound for the user, and can help tune the frequency response of earbud **3000***a*. More specifically, each aperture is not just a random opening, but instead can be intentionally formed for a particular purpose, namely to change the frequency response of ear bud **3000***a* in a way that helps to tune the frequency response and/or provide a consistent bass response amongst the same user and across users. The acoustic apertures can each also include various meshes (e.g., a directional sound port mesh, front leak mesh, back vent mesh, bass port mesh, and a multiport mesh) that cover or fit into a corresponding acoustic aperture of earbud **3000***a*.

FIG. **45**B illustrates a simplified side view of earbud **3000***a* with acoustic insert **4505**. As shown in FIG. **45**B, acoustic insert **4505** and driver **4570** are disposed within housing **3005** (illustrated in dashed lines). Now referring simultaneously to FIGS. **45**A and **45**B the function of acoustic insert **4505** is described in more detail. Driver **4570** can be positioned within cavity **4510** of housing **3005**, forming a front volume **4515** in front of the driver and a back volume **4520** behind the driver. Driver **4570** can be positioned such that front volume **4515** is acoustically isolated from a back volume **4520**. Front and back volumes **4515**, **4520**, respectively can be formed within cavity **4510** at least partially by housing **3005** and sized and shaped to achieve a desired frequency response of the earbud.

In some embodiments, portions of acoustic insert **4505** are formed to closely match the contours of an interior surface **4525** of housing **3005**. More specifically, raised regions **4530** of acoustic insert **4505** can be formed to fit securely against interior surface **4525** such that they can be bonded to interior surface **4525** forming a bass port channel **4527** and a multiport chamber **4507** that are acoustically sealed. That is, bass port channel **4527** can be formed by first, second and third walls **4535**, **4540**, **4545**, respectively of bass port recess **4550** and a fourth wall formed by interior surface **4525** of housing **3005**. Similarly, raised regions **4530** can be sealed to interior surface **4525** forming multiport chamber **4507** that is acoustically sealed.

Bass port channel **4527** can have an entrance aperture **4555** that communicates with back volume **4520**. Bass port channel **4527** can be routed from entrance aperture **4555** to an exit aperture **4560** that is formed within multiport chamber **4507** that can be vented to the ambient. Rear vent **3035** can also be routed to multiport chamber **4507**, providing a vent from back volume **4520** through rear vent aperture **4565** in acoustic insert **4505** to multiport chamber **4507**. The size and shape of bass port channel **4527** and rear vent aperture **4565** can be formed for a particular purpose, namely to change the frequency response of ear bud **3000***a* in a way that helps to tune the frequency response and/or provide a consistent bass response amongst the same user and across users.

Housing **3005** can serve as a housing for the remaining components of the earbud assembly and can be formed in any suitable manner and can be made from any suitable material. For example, in one embodiment housing **3005** is made from a molded plastic. Similarly, acoustic insert **4505** can be made from any suitable material including a molded plastic.

Myriad methods can be used to bond raised regions **4530** of acoustic insert to interior surface **4525** of housing **3005**. In one embodiment housing **3005** can be made from an ABS plastic that is substantially transparent, or at least semitransparent to the wavelength of a laser (FIG. **46**, step **4605**). Acoustic insert **4505** can be made from a plastic that is opaque or at least mostly opaque to the same laser (FIG. **46**, step **4610**). Acoustic insert **4505** can be placed within cavity **4510** of housing **3005** such that raised regions **4530** are firmly against interior surface **4525** (FIG. **46**, step **4615**). A laser beam from the laser can then be directed through housing **3005** such that it impinges raised regions **4530**, melting at least a portion of the raised regions and bonding them to interior surface **4525** of housing **3005** (FIG. **46**, step **4620**).

In some embodiments, to enable the laser to be directed through housing **3005**, housing **3005** can use a relatively low amount of pigment, a pigment that is transparent to the laser, or other features to allow the laser to be transmitted through the housing with enough energy to melt at least a portion of raised regions **4530**. Acoustic insert **4505** can be made from a plastic that contains an absorptive dopant, such as carbon, so it absorbs the laser energy. In one embodiment a laser system that is similar to a laser direct structuring laser can be used to perform the laser bonding operation. In other embodiments raised regions **4530** can be bonded to interior surface **4525** with other methods such as, but not limited to, a pressure sensitive adhesive, a heat activated film or a laser activated adhesive.

Wireless Pairing

FIGS. **47**-**49** illustrate a wireless pairing system **4700** that includes a pair of wireless headphones **4710** (e.g., a pair of wireless earbuds) that can be wirelessly paired to a host device **4715** (e.g., a computer, a smartphone, a tablet computer, a smart watch, or the like), with the pairing initiated by an intermediate device **4705** (e.g., a case for the headphones). Intermediate device **4705** can instruct wireless headphones **4710** to enter a pairing sequence with host device **4715** in response to a user input. The user input can be a user-initiated event, such as opening earbud case lid **4720** or depressing an input button **4725**. In some embodiments headphones **4710** can receive the pairing instruction via a wired connection between intermediate device **4705** and wireless headphones **4710** (e.g., through mated electrical contacts in a case for a pair of wireless earbuds and the earbuds as described above). In other embodiments, intermediate device **4705** can include a wireless radio that communicates the instruction to the wireless radio within wireless headphones **4710**. Upon receiving the pairing instruction, headphones **4710** can initiate a pairing sequence to host device **4715** via a wireless communication protocol (e.g., via Bluetooth®) that supports bidirectional data transfer.

In some cases, headphones **4710** are a pair of wireless earbuds and only one earbud in the pair (i.e., a primary earbud) is paired with the companion host device **4715**. In such cases, the primary earbud communicatively couples with the other earbud (a secondary earbud) so that audio data received from host device **4715** by the primary wireless earbud can be shared with the communicatively coupled secondary wireless earbud.

In some embodiments, headphones **4710** do not include a user input mechanism, such as a button that can be pressed for a user to initiate pairing between the headphones and host device **4715**, and wireless pairing between intermediate device **4705** and host device **4715** can only be initiated via intermediate device **4705** (e.g., in response to user-input by either opening the case lid or pressing an input button on the case or other suitable means) or by host device **4715**.

FIG. **48** illustrates a wireless pairing system **4800** according to an embodiment of the present disclosure that includes intermediate device **4705**, headphones **4710** and host device **4715** shown in FIG. **47**. While FIG. **48** illustrates simplified block diagrams of each of intermediate device **4705**, wireless headphones **4710** and host device **4715**, it is understood each of the illustrated devices can include functions and features in addition to those illustrated in FIG. **48**. For example, while not shown in FIG. **48**, each of intermediate device **4705**, wireless headphones **4710** and host device **4715** can include a battery, such as a rechargeable battery, that provides power to the various components of each device.

In some embodiments, host device **4715** can be an electronic device or portable media player, such as an iPod™ media player manufactured and sold by Apple Inc., assignee of the present application. In general, a media player can be any device capable of storing and playing media assets including, but not limited to, audio, video, and/or still images. Alternatively, host device **4715** can be a mobile phone (e.g., using conventional cellular communication technology), a personal digital assistant (PDA), or a multifunctional device that incorporates a combination of media player, mobile phone, and/or PDA capabilities, such as an iPhone™ mobile device produced and sold by Apple, Inc. Host device **4715** can also be a general-purpose computer, such as a handheld computer, laptop computer, desktop computer, or the like.

Host device **4715** includes a processor **4820**, a memory **4825**, a user interface **4830**, a first wireless transceiver **4835** (e.g., a Bluetooth transceiver), a second wireless transceiver **4840** (e.g., a cellular transceiver) and a wired input/output **4845**. Processor **4820**, which can be implemented as one or more integrated circuits, can control the operation of host device **4715**. For example, in response to user input signals provided by a user through user interface **4830**, processor **4820** can initiate programs to search, list or play media assets stored in memory **4825**. In communication with cellular transceiver **4840**, processor **4820** can control placing and receiving of telephone calls. Second transceiver **4840** can also be used to communicate data with a network, including network storage **4815**. First transceiver **4835** can be used to support short range wireless communication (e.g., Bluetooth communication) between host device **4715** and various accessory devices, including headphones **4710**. Memory **4825** can store any information, including Bluetooth pairing information as described in more detail below. Wired input/output **4845** can be any wired connection, such as a USB protocol or a proprietary protocol, such as that used by the Apple Lightning™ connector.

Wireless headphones **4710** can be traditional headphones that are worn over a user's head, headsets (a combination of a headphone and a microphone), earbuds (very small headphones that are designed to be fitted directly in a user's ear) or any other portable listening device. In some embodiments wireless headphones **4710** include a processor **4850**, a wired input/output **4855**, a memory **4860** and a wireless transceiver **4865** (e.g., a Bluetooth transceiver).

Processor **4850**, which can be implemented as one or more integrated circuits, can control the operation of headphones **4710**. Wired input/output **4855** can be any wired connection between intermediate device **4705** and wireless headphones **4710** including a proprietary interconnection. In one example wired input/output **4855** is an electrical connector, such as connector **347** (see FIG. **3**) or any of the connectors illustrated in FIGS. **4A-8C**, that provides a direct electrical connection between wireless headphones **4710** and intermediate device **4705** when the headphones are mated with the intermediate device (e.g., stored in a case). Wired input/output **4855** can be used for charging wireless headphones **4710** and/or communicating data with intermediate device **4705**. In one example, wired input/output **4855** of headphones **4710** can be used to receive a signal from wired input/output **4875** of intermediate device **4705** to initiate a pairing sequence of the headphones, as described in more detail below.

Wireless transceiver **4865** can be used to support short range wireless communication (e.g., Bluetooth communication) between headphones **4710** and various host devices, including host device **4715**. In one embodiment, intermediate device **4705** may also be equipped with a wireless transceiver (not shown; e.g., a Bluetooth transceiver) that can wirelessly communicate with wireless transceiver **4865**. Wireless transceiver **4865** enables headphones **4710** to communicate wirelessly with host device **4715** once a channel for wireless communication has been established between the two. For example, headphones **4710** and host device **4715** may each be provided with Bluetooth® technology, including appropriate short-range transceiver units. In some embodiments, it may be possible to establish a Bluetooth® pairing between host device **4715** and headphones **4710** using conventional techniques, such as manual entry of a passcode (or PIN code) associated with headphones **4710** into host device **4715**. In other embodiments. Bluetooth® pairings can be established automatically as described below.

Memory **4860** can store firmware for operating headphones **4710** as well as data for coupling with other wireless ear buds and for pairing headphones **4710** with companion host devices. For example, memory **4860** can store a connection history for companion host devices such as host device **4715**, with which headphones **4710** have previously paired. The connection history can include data for automatically pairing headphones **4710** with the companion host device without having to configure a connection between the headphones and the companion host device (e.g., enter a password, exchange shared secrets, etc.). For example, the connection history can include one or more link keys for connecting to a wireless network (e.g., Bluetooth link keys). Memory **4860** can also store a MAC address that uniquely identifies headphones **4710** as well as store a paired partner MAC address of another headphone that has previously coupled with the wireless ear bud **165**. For example, in one embodiment headphones **4710** are wireless earbuds and memory **4860** can store the MAC address of a paired partner earbud.

In another example once headphones **4710** are paired with host device **4715**, the host device can save related pairing information from headphones **4710** to a network storage system **4815** such as cloud storage. In one embodiment the related pairing information stored in network storage **4815** can then be used by other host devices to be pre-paired with wireless headphones **4710**. As an illustrative example, in one embodiment wireless headphones are initially paired with an iPhone. The iPhone communicates the pairing information to the user's iTunes or iCloud account that is saved on a remote network separate from host device **4715** (e.g., in the iCloud). The wireless headphones will then be listed on the user's iTunes or iCloud account as an authorized wireless device for the account. For example, the user's iCloud account may include a first list of host devices (one or more smart phones, one or more tablet computers and one or more laptop computers) including host device **4715** that are automatically authorized, for example based on the previous

authorization and/or authentication of the devices to the iCloud account, to be paired with one or more wireless headphones that have been added to the account (including wireless headphones **4710**). The user can then go to their iPad which can be automatically paired to the headphones without having to initiate a separate pairing sequence between headphones **4710** and the iPad based on the list of approved pairing in the user's iCloud account. Multiple host devices can be pre-authorized and automatically paired using this feature.

In some embodiments, intermediate device **4705** can be a case for headphones **4710**, a docking station, or another type of accessory or electronic device. In some embodiments intermediate device **4705** includes a processor **4870**, a wired input/output **4875**, and a user input device **4880** and a memory **4885**.

Processor **4870**, which can be implemented as one or more integrated circuits, can control the operation of intermediate device **4705** by executing computer instructions stored in a computer-readable memory or medium, such as memory **4885**. For example, instructions stored within memory **4885** can cause processor **4870** to, in response to user input signals provided by user input device **4880**, send an instruction to headphones **4710** (e.g., via wired I/O interface **4875** or by a wireless channel between intermediate device **4705** and wireless headphones **4710**) to enter a pairing sequence with a host device. Wired input/output **4875** can be any wired connection between intermediate device **4705** and wireless headphones **4710** including a proprietary interconnection. In one example wired input/output **4855** is a portion of an electrical connector **347** (see FIG. **3**) between pair of earbuds **115***a*, **115***b* and case **100** and can be any connector illustrated in FIGS. **4**A-**8**C. Wired input/output **4855** can be used for charging and/or data. In various embodiments wired input/output **4855** can be used to transmit a signal to headphones **4710** to initiate a pairing sequence, as described in more detail below.

User input device **4880** can be any device operable by a user. In one embodiment user input device **4880** is a lid sensor such as lid sensor **220** (see FIG. **2**) that detects an opening or a closing of a lid of intermediate device **4705**. In one example an opening event is detected and processor **4870** sends a signal through wired input/output **4875** of intermediate device to wired input/output **4855** of headphones to processor **4850** of headphones **4710** to initiate a pairing sequence and/or to turn on Bluetooth transceiver **4865**. In another example, wireless headphones **4710** have never been paired before and headphones **4710** enter a pairing sequence. In a further example headphones **4710** have been paired before and headphones **4710** activate Bluetooth transceiver **4865** but do not initiate a pairing sequence. In one embodiment intermediate device **4705** may include one or more indicator lights to notify a user that it has sent a pairing signal to headphones **4710**.

FIG. **49** describes a method **4900** in which an intermediate device (e.g., intermediate device **4705**) initiates wireless pairing between a host device (e.g., host device **4715**) and a pair of wireless headphones (e.g., wireless headphones **4710**). The method set forth in FIG. **49** can be carried out by, for example, a processor within the intermediate device executing computer instructions stored within a computer-readable memory (e.g., processor **4870** executing instructions stored in computer-readable memory **4885**). In step **4905** the intermediate device receives a user input. In some embodiments the intermediate device is a case for a pair of headphones or a pair of earbuds. In various embodiments the user input can be opening a lid of the case, depressing a button on the case or doing anything else to the case that the case registers as a user input indicative of a desire to initiate the pairing sequence. In one particular example, when a user opens a lid of the case, a lid sensor sends a signal to processor **4870** notifying the processor that the lid has been opened.

In step **4910**, in response to receiving the user input, the intermediate device determines if the headphones are connected to the intermediate device. For example, in some embodiments the intermediate device is an earbud case and the pair of wireless headphones is a pair of wireless earbuds that fit within earbud receiving cavities of the case. The earbud case can include one or more earbud detectors as described above that can generate a signal indicating whether and can determine whether the earbuds are stored within the case as described above and provide a signal to the processor indicating whether the earbuds are stored within the case. As one particular example, an earbud case can determine if earbuds are stored within the case based on whether one or more electrical contacts on the earbuds are electrically connected to one or more electrical contacts within the case. In another embodiment the intermediate device is a docking station that couples to the headphones with a mating connector. If some embodiments, if the headphones are not connected to intermediate device there is no action taken by the intermediate device (step **4912**), while if the headphones are connected to the intermediate device the method proceeds to step **4915**. In other embodiments, step **4910** is optional and the intermediate device proceeds with step **4915** regardless. In such embodiments, however, if the headphones are not communicatively coupled to the intermediate device, the headphones will not receive the instruction generated in step **4915** and thus the end result of method **4900** in such cases will be "no action taken" (step **4912**).

In step **4915**, in response to the intermediate device determining that the headphones are connected to the intermediate device, the intermediate device transmits an "initiate pairing" instruction or signal to the headphones. In one embodiment the intermediate device transmits the "initiate pairing" signal through a charging connection between the headphones and the intermediate device. In another embodiment the intermediate device can send the signal wirelessly to the headphones. In one example different user inputs result in the intermediate device transmitting different "initiate pairing" signals to the headphones that are distinguishable by the headphones. As one example where the intermediate device is a case for a pair of earbuds, the case can transmit an instruction to the earbuds to automatically pair with a known and previously paired host when the lid opened. If, the input button is depressed, either before or after the lid is opened, the case can transmit an instruction to the earbuds to enter a discovery mode instead of the automatic pairing mode. The discovery mode then enables the earbuds to be selectively paired by a user to a different host device using a standard pairing sequence. In some embodiments, as described above, step **4910** is optional and intermediate device transmits an "initiate pairing" request signal to the headphones without attempting to determine if the headphones are connected, but if the headphones are not connected, the signal will not be received.

In step **4920** the headphones receive the "initiate pairing" signal from the intermediate device through an electrical connector, or through a wireless connection.

In step **4925**, in response to receiving the "initiate pairing" signal, the headphones determine if a pairing sequence should be initiated. In one embodiment the headphones

examine a pairing memory within the headphones and determine if this is a first pairing or a subsequent pairing of the headphones. If it is a first pairing the headphone processor can determine what type of user input was received to determine if pairing should be initiated. For example, for a first pairing (e.g., the pairing memory of the headphones is empty) if a user opened the lid, pairing can be initiated, but if a user pushed a button pairing is not initiated. However, if this is a subsequent pairing (e.g., the pairing memory of the headphones has at least one registry), if a user opens the lid pairing is not initiated but if a user pushed a button then pairing is initiated. These are only examples and other logic sequences are within the scope of this disclosure.

In a further example the headphones will only pair to a host device within a predetermined proximity of the headphones. In one example the headphones will only pair to a host electronic device within 10 meters, while in another embodiment it must be within 5 meters and in a further embodiment within 3 meters and in yet another embodiment within 1 meter. The maximum proximity pairing distance between the headphones and host device can be set at either the headphones or at the host device.

In some embodiments, the distance can be controlled by the headphones by the strength of the wireless signal sent from the headphones to the host device. For example, the headphones can broadcast a pairing signal that is at a predetermined reduced power level to insure that the electronic device is within a desired proximity. In one embodiment the headphones may broadcast a pairing signal that is 80% or less of its normal broadcasting power (i.e., its normal signal strength). In another embodiment the pairing signal may be 50% or less of the normal signal strength and in a further embodiment it may be 25% or less of the normal signal strength.

In some embodiments, the distance can be controlled by the host electronic device based on the strength of the signal received from the headphones. For example, in some embodiments the host electronic device will only accept the wireless pairing request from the first device if the strength of the wireless signal transmitting the pairing request is above a predetermined threshold that is higher than a minimum signal strength required for normal wireless communication between the first and second devices. In one embodiment the predetermined threshold is 200% higher than the normal minimum signal strength required for wireless communication between the headphones and host device. In another embodiment the predetermined threshold is 150% higher than the normal minimum signal strength and in still further embodiments it can be 100% or 50% higher than the normal minimum signal strength.

Regardless of the approach taken, if the host electronic device is not sufficiently proximate the headphones, the headphones will not accept (or will not receive) the pairing request and no further action to consummate the pairing is taken (step **4927**). However if the required conditions are met, the method proceeds to step **4930**.

In step **4930**, in response to the headphones determining that a pairing sequence should be initiated (or should continue), the headphones transmit a wireless pairing signal using a wireless protocol common between the headphones and host device. In some embodiments this may be a standardized recurring Bluetooth signal that can stop after a predetermined period of time if there is no answer. In other embodiments, other known wireless protocols can be used.

In step **4935**, in response to receiving the pairing signal, the host device authenticates and pairs the headphones. In one example the host device provides the user a prompt asking if pairing should be performed before pairing the headphones. If the user accepts, the host device sends data to the headphones and authentication of the headphones is performed.

In some instances, prior to initiating a wireless pairing sequence between a pair of wireless headphones and a host device, a case for a pair of wireless earbuds according to the present disclosure can automatically turn ON the wireless radio of the earbuds when a user opens the lid that encloses the earbuds within the case. FIG. **50** illustrates a method **5000** in which an earbud case (e.g., intermediate device **4705**) turns ON the wireless radio of a pair of earbuds (e.g., wireless headphones **4710**) stored within the case according to some embodiments of the disclosure. As shown in FIG. **50**, method **5000** can start when intermediate device **4705** detects that lid **4720** is moved from a closed position to an open position (step **5005**).

If the earbuds are not in the case, then no action is taken (step **5020**). If wireless headphones **4710** are within the case (step **5010**), the case can generate and send an instruction to the pair of earbuds that causes the earbuds to turn their wireless radio on. In some embodiments the instruction can be sent over one or more electrical contacts positioned within the receiving cavity as described above. Once the earbuds turn their wireless radio on, the buds can be further instructed to initiate a pairing sequence with a host device. In some embodiments, a single user interaction with the case (e.g., opening lid **4720** or depressing button **4725**) can generate instructions that are sent to the earbuds to both turn on the earbud wireless radio and initiate a pairing sequence as described with respect to FIG. **49**. In some embodiments a single instruction from intermediate device **4705** can initiate both actions and in other embodiments the case can send multiple instructions in response to the single event.

In other embodiments, the closure of lid **4720** can automatically turn OFF the wireless radio in the earbuds as described with respect to FIG. **51**, which illustrates a method **5100** according to some embodiments of the disclosure. As shown in FIG. **51**, method **5100** can start when intermediate device **4705** detects that lid **4720** is moved from an open position to a closed position (step **5105**). If the earbuds are not in the case, then no action is taken (step **5120**). If wireless headphones **4710** are within the case (step **5110**), the case can generate and send an instruction to the pair of earbuds that causes the earbuds to turn OFF their wireless radio thus saving charge of the batteries within the earbuds.

While the various embodiments and examples described above were primarily focused on earbuds and a case for storing such earbuds, embodiments of the disclosure are not limited to such and the techniques of the disclosure described above are equally applicable to headphones and other listening devices and cases for such. For example, in one embodiment, case **100** described in FIG. **1** can be a case for a pair of headphones instead of a pair of earbuds. In such an embodiment, cavities **110***a*, **110***b* can be sized and shaped to hold left and right earpads of the headphones along with portions of a band connecting the two earpads. In other embodiments, a single cavity can be included in the case to hold the earpads and some or all of the connecting headband. Similarly, in other embodiments, case **100** can be sized and shaped to hold a portable speaker or other type of listening device.

For simplicity, various internal components, such as circuitry, bus, memory, storage devices and other components of pair of earbuds **115***a*, **115***b*, case **100** (see FIG. **1**) and wearable electronic device **2301** (see FIG. **23**) are sometimes not shown in the figures. Also, it is noted that some

embodiments have been described as a process that is depicted as a flow diagram or block diagram. Although each diagram may describe the process as a sequential series of operations, many of the operations can be performed in parallel or concurrently. In addition, the order of the operations may be rearranged. A process may have additional steps not included in the figures.

In the foregoing specification, embodiments of the disclosure have been described with reference to numerous specific details that may vary from implementation to implementation. The specification and drawings are, accordingly, to be regarded in an illustrative rather than a restrictive sense. The sole and exclusive indicator of the scope of the disclosure, and what is intended by the applicants to be the scope of the disclosure, is the literal and equivalent scope of the set of claims that issue from this application, in the specific form in which such claims issue, including any subsequent correction. The specific details of particular embodiments may be combined in any suitable manner without departing from the spirit and scope of embodiments of the disclosure. Additionally, spatially relative terms, such as "bottom" or "top" and the like may be used to describe an element and/or feature's relationship to another element(s) and/or feature(s) as, for example, illustrated in the figures. It will be understood that the spatially relative terms are intended to encompass different orientations of the device in use and/or operation in addition to the orientation depicted in the figures. For example, if the device in the figures is turned over, elements described as a "bottom" surface may then be oriented "above" other elements or features. The device may be otherwise oriented (e.g., rotated 90 degrees or at other orientations) and the spatially relative descriptors used herein interpreted accordingly.

What is claimed is:

1. An electrical receptacle connector comprising:

a housing comprising an electrically insulative polymer that extends between a receiving face and a rear face, the housing defining a cavity that communicates with an opening in the receiving face to receive a plug portion of a mating plug connector;

a contact spacer positioned adjacent to the rear face, the contact spacer having a first surface and a second surface wherein the second surface is recessed from the first surface;

a plurality of contacts, each contact having a tip positioned within the cavity, an anchor portion that anchors each contact to the contact spacer, a beam portion that connects the tip to the anchor portion and an electrical lead extending from the anchor portion; and

a dielectric overmold component including a first face positioned against the second surface and an interconnection face that is coplanar with the first surface, wherein the interconnection face includes a plurality of openings, each opening formed around a respective one of the electrical leads.

2. The electrical receptacle connector of claim **1** wherein the dielectric overmold component forms a liquid-tight seal to each of the plurality of contacts.

3. The electrical receptacle connector of claim **1** further comprising a ground latch coupled to the dielectric overmold component, the ground latch including first and second spring arms on opposing sides of the plurality of contacts.

4. The electrical receptacle connector of claim **1** wherein the cavity includes slots that align with each of the plurality of contacts.

5. The electrical receptacle connector of claim **1** wherein a metallic bracket is disposed around and outside surface of the housing and includes a top bracket attached to a bottom bracket.

6. The electrical receptacle connector of claim **1** wherein a gasket is disposed between the rear face of the housing and a contact assembly comprising the contact spacer, the plurality of contacts and the dielectric overmold component, wherein the gasket forms a liquid-tight seal between the contact assembly and the housing.

7. An electrical receptacle connector comprising:

a housing comprising an electrically insulative polymer that extends between a receiving face and a rear face, the housing defining a cavity that communicates with a front opening in the receiving face to receive a plug portion of a mating plug connector and wherein the housing has a plurality of slots that form a portion of the cavity; and

a contact assembly including:

a contact spacer positioned adjacent to the rear face, the contact spacer having a first surface and a second surface wherein the second surface is recessed from the first surface;

a plurality of contacts positioned adjacent to the rear face, wherein each of the plurality of contacts is disposed within one of the plurality of slots and includes a tip positioned within the cavity, an anchor portion that anchors each contact to the contact spacer, an electrical lead extending from the anchor portion and a beam portion that connects the tip to the anchor portion; and

a dielectric overmold component including a first face positioned against the second surface and an interconnection face that is coplanar with the first surface, wherein the interconnection face includes a plurality of openings, each opening formed around a respective one of the electrical leads.

8. The electrical receptacle connector of claim **7** wherein the overmolded dielectric overmold component forms a liquid-tight seal to each of the plurality of contacts.

9. The electrical receptacle connector of claim **7** wherein the contact assembly further includes a ground latch having first and second retention features on opposing sides of the plurality of contacts and wherein the dielectric overmold component secures the ground latch to the contact assembly.

10. The electrical receptacle connector of claim **7** wherein a metallic bracket is disposed around an outside surface of the housing and formed to secure the contact assembly to the housing, and wherein the metallic bracket includes a top bracket attached to a bottom bracket.

11. The electrical receptacle connector of claim **7** wherein a gasket is disposed between the rear face of the housing and the contact assembly and the gasket forms a liquid-tight seal between the contact assembly and the housing.

12. An electrical receptacle connector comprising:

a housing comprising an electrically insulative polymer that extends between a receiving face and a rear face, the housing defining a cavity that communicates with a front opening in the receiving face to receive a plug portion of a mating plug connector and wherein the housing has a plurality of slots that form a portion of the cavity; and

a contact assembly including: (i) a contact spacer positioned adjacent to the rear face, the contact spacer having a first surface and a second surface wherein the second surface is recessed from the first surface; (ii) a plurality of contacts, each of the plurality of contacts having a tip that extents into the cavity through one of

the plurality of slots, an anchor portion coupled to the contact spacer, an electrical lead extending from the anchor portion and a beam portion that connects the tip to the anchor portion, (iii) a ground latch having first and second spring arms on opposing sides of the plurality of contacts, and (iv) a dielectric component formed around a portion of the contact spacer and around the anchor portion of each contact in the plurality of contacts, wherein the dielectric component includes a first face positioned against the second surface and an interconnection face that is coplanar with the first surface, and wherein the interconnection face includes a plurality of openings, each opening formed around a respective one of the electrical leads.

13. The electrical receptacle connector of claim **12** further comprising a metallic bracket disposed around an outside surface of the housing and formed to secure the contact assembly to the housing, wherein the metallic bracket includes first and second opposing bracket portions.

14. The electrical receptacle connector of claim **12** further comprising a gasket disposed between the rear face of the housing and the contact assembly, wherein the gasket forms a liquid-tight seal between the contact assembly and the housing.

15. The electrical receptacle connector of claim **12** wherein the plurality of contacts consists of eight contacts spaced apart from each other along a single row.

* * * * *