US008031186B2

(12) **United States Patent**
Ostergaard

(10) **Patent No.: US 8,031,186 B2**
(45) **Date of Patent: Oct. 4, 2011**

(54) **OPTICAL TOUCHPAD SYSTEM AND WAVEGUIDE FOR USE THEREIN**

(75) Inventor: **Jens Wagenblast Stubbe Ostergaard**, Roskilde (DK)

(73) Assignee: **FlatFrog Laboratories AB**, Lund (SE)

(*) Notice: Subject to any disclaimer, the term of this patent is extended or adjusted under 35 U.S.C. 154(b) by 778 days.

(21) Appl. No.: **11/480,865**

(22) Filed: **Jul. 6, 2006**

(65) **Prior Publication Data**

US 2008/0007540 A1 Jan. 10, 2008

(51) **Int. Cl.**
G06F 3/042 (2006.01)

(52) **U.S. Cl.** **345/176**

(58) **Field of Classification Search** 345/173–179, 345/168, 156; 250/221, 222.2; 702/19, 150; 356/614; 385/13
See application file for complete search history.

(56) **References Cited**

U.S. PATENT DOCUMENTS

4,180,702	A	12/1979	Sick et al.	250/227.11
4,346,376	A	8/1982	Mallos	340/712
4,484,179	A *	11/1984	Kasday	345/176
4,542,375	A	9/1985	Alles et al.	340/712
5,600,105	A	2/1997	Fukuzaki et al.	178/19
5,672,852	A	9/1997	Fukuzaki et al.	178/19
5,686,942	A	11/1997	Ball	345/158
5,729,249	A	3/1998	Yasutake	345/173
5,945,980	A	8/1999	Moissev et al.	345/173
6,061,177	A *	5/2000	Fujimoto	359/443
6,227,667	B1	5/2001	Halldorsson et al.	351/206
6,380,732	B1	4/2002	Gilboa	324/207.17
6,390,370	B1	5/2002	Plesko	235/462.49
6,660,964	B1	12/2003	Benderly	219/121.74
6,799,141	B1	9/2004	Stoustrup et al.	702/159
7,133,031	B2	11/2006	Wang et al.	345/173
7,442,914	B2	10/2008	Eliasson et al.	250/221
2002/0158823	A1	10/2002	Zavracky et al.	345/87
2002/0158853	A1 *	10/2002	Sugawara et al.	345/176
2003/0137494	A1	7/2003	Tulbert	345/173
2003/0156100	A1	8/2003	Gettemy	345/204
2003/0214486	A1 *	11/2003	Roberts	345/173
2004/0027339	A1	2/2004	Schulz	345/173

(Continued)

FOREIGN PATENT DOCUMENTS

DE 10139147 A1 3/2003

(Continued)

OTHER PUBLICATIONS

Iizuka, Keigo. "Elements of Photonics, vol. I: In Free Space and Special Media." Jun. 15, 2002. John Wiley & Sons, Inc. Chapter 2, pp. 110-165.*

Primary Examiner — Chanh Nguyen
Assistant Examiner — Allison Walthall
(74) *Attorney, Agent, or Firm* — Pillsbury Winthrop Shaw Pittman LLP

(57) **ABSTRACT**

An optical touchpad system is disclosed that may be easily integrated into a variety of applications. One feature of the optical touchpad system that may contribute to this versatility may be the ability of the optical touchpad system to function in the same manner independent from a topology and/or opacity of an interface surface of the optical touchpad system. This may enable the interface surface to be composed of any of a variety of materials. This may further enable the interface surface to include various topologies adapted for the application in which the optical touchpad system may be employed.

23 Claims, 4 Drawing Sheets

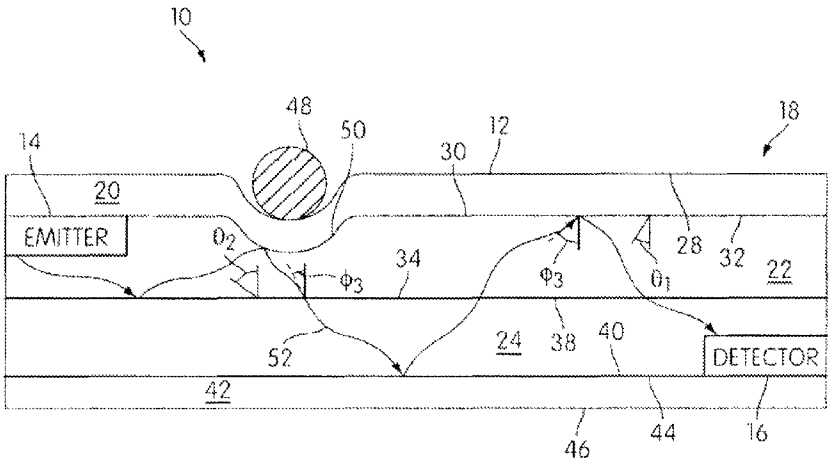

APPLE 2007
AliveCor v. Apple
IPR2023-00948

U.S. PATENT DOCUMENTS

2004/0032401	A1	2/2004	Nakazawa et al.	345/173
2004/0238627	A1	12/2004	Silverbrook et al.	235/382
2004/0239702	A1	12/2004	Kang et al.	345/863
2004/0252091	A1	12/2004	Ma et al.	345/87
2004/0252867	A1*	12/2004	Lan et al.	382/124
2005/0156914	A1	7/2005	Lipman et al.	345/179
2005/0212774	A1	9/2005	Ho et al.	345/173
2005/0248540	A1	11/2005	Newton	345/173
2005/0253834	A1	11/2005	Sakamaki et al.	345/207
2006/0001653	A1	1/2006	Smits	345/176
2006/0017706	A1	1/2006	Cutherell et al.	345/173
2006/0033725	A1	2/2006	Marggraff et al.	345/179
2006/0256092	A1	11/2006	Lee	345/173
2006/0279558	A1	12/2006	Van Delden et al.	345/176
2006/0281543	A1	12/2006	Sutton et al.	463/29
2006/0290684	A1	12/2006	Giraldo et al.	345/175
2007/0052684	A1*	3/2007	Gruhlke et al.	345/173
2007/0125937	A1*	6/2007	Eliasson et al.	250/221
2007/0152985	A1*	7/2007	Ostergaard et al.	345/176
2009/0135162	A1	5/2009	Van De Wijdeven et al.	345/175

FOREIGN PATENT DOCUMENTS

EP	1 457 870	9/2004
GB	2 409 515	6/2005
WO	WO 84/03186	8/1984
WO	WO 2004/081502	9/2004
WO	WO 2004/081956	9/2004
WO	WO 2005/026938	3/2005
WO	WO 2005/029172	3/2005
WO	WO 2005029172 A2 *	3/2005
WO	WO 2005029395 A2 *	3/2005
WO	WO 2005/125011	12/2005
WO	WO 2006/124551	11/2006

* cited by examiner

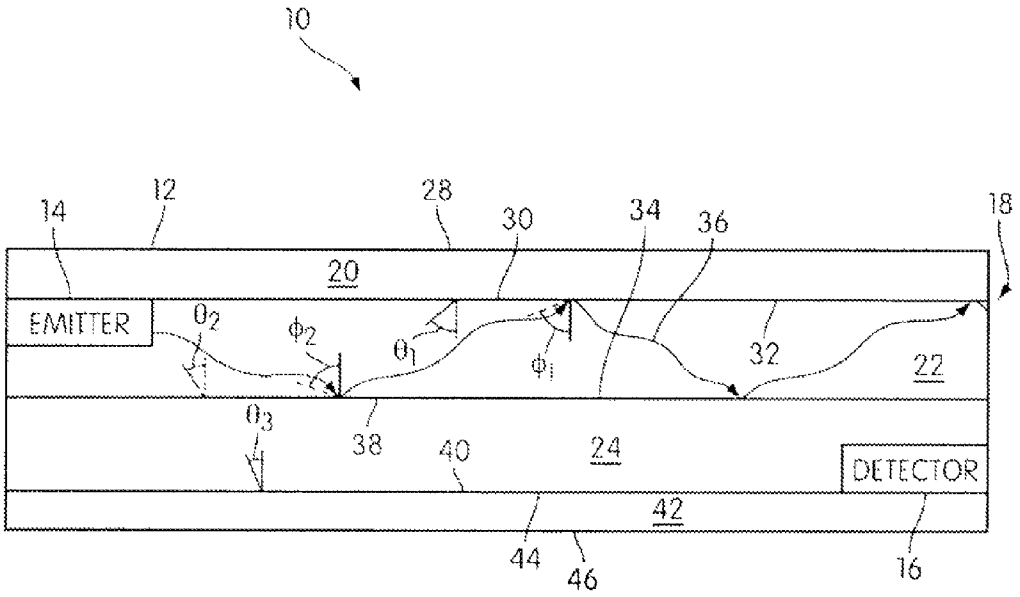
10
14
12
28
30
34
36
18
20
EMITTER
θ_2
ϕ_2
θ_1
ϕ_1
32
22
θ_3
38
40
24
DETECTOR
42
44
46
16

FIG. 1

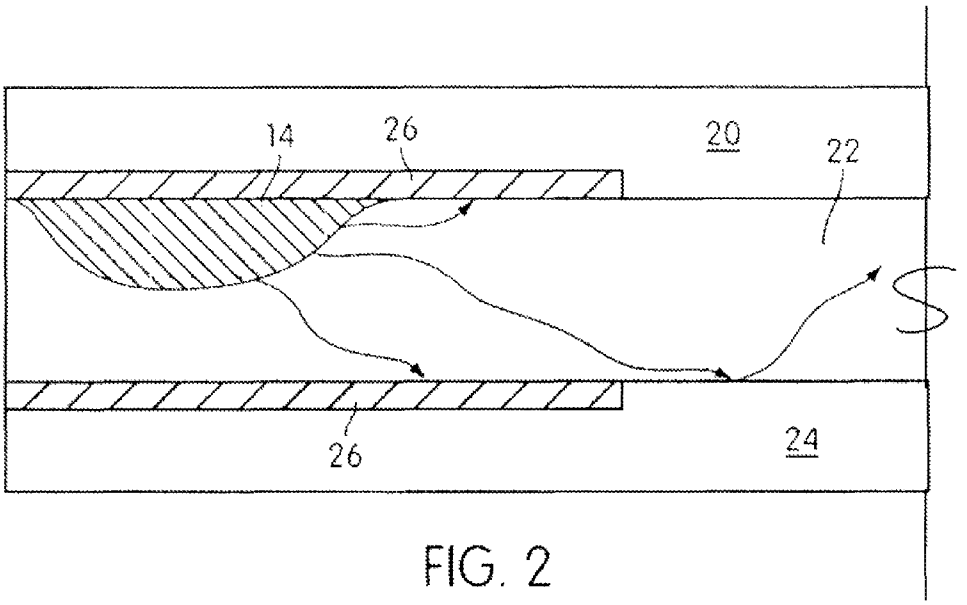
14
26
20
22
26
24

FIG. 2

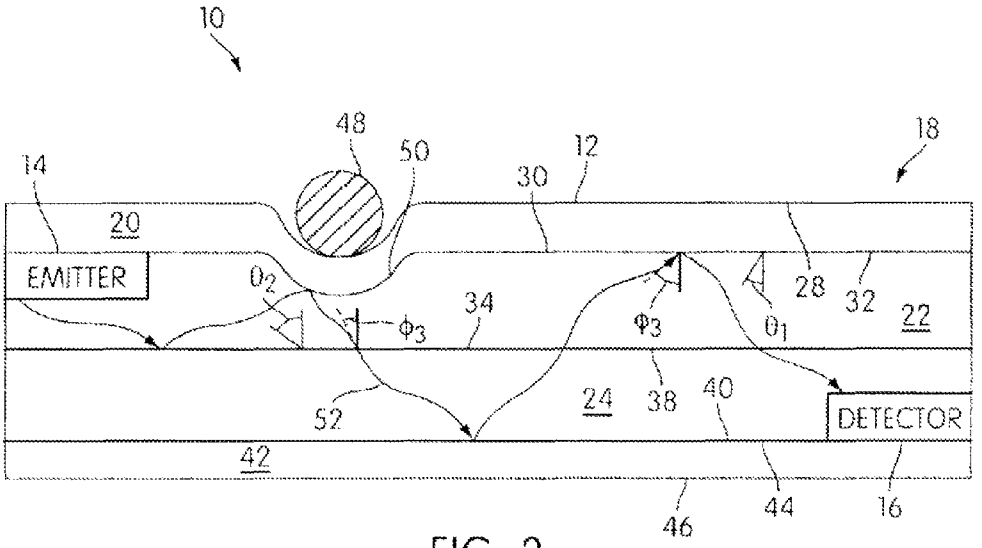
10
48
50
12
18
14
30
20
EMITTER
28
32
22
34
24
38
40
DETECTOR
52
42
46
44
16

FIG. 3

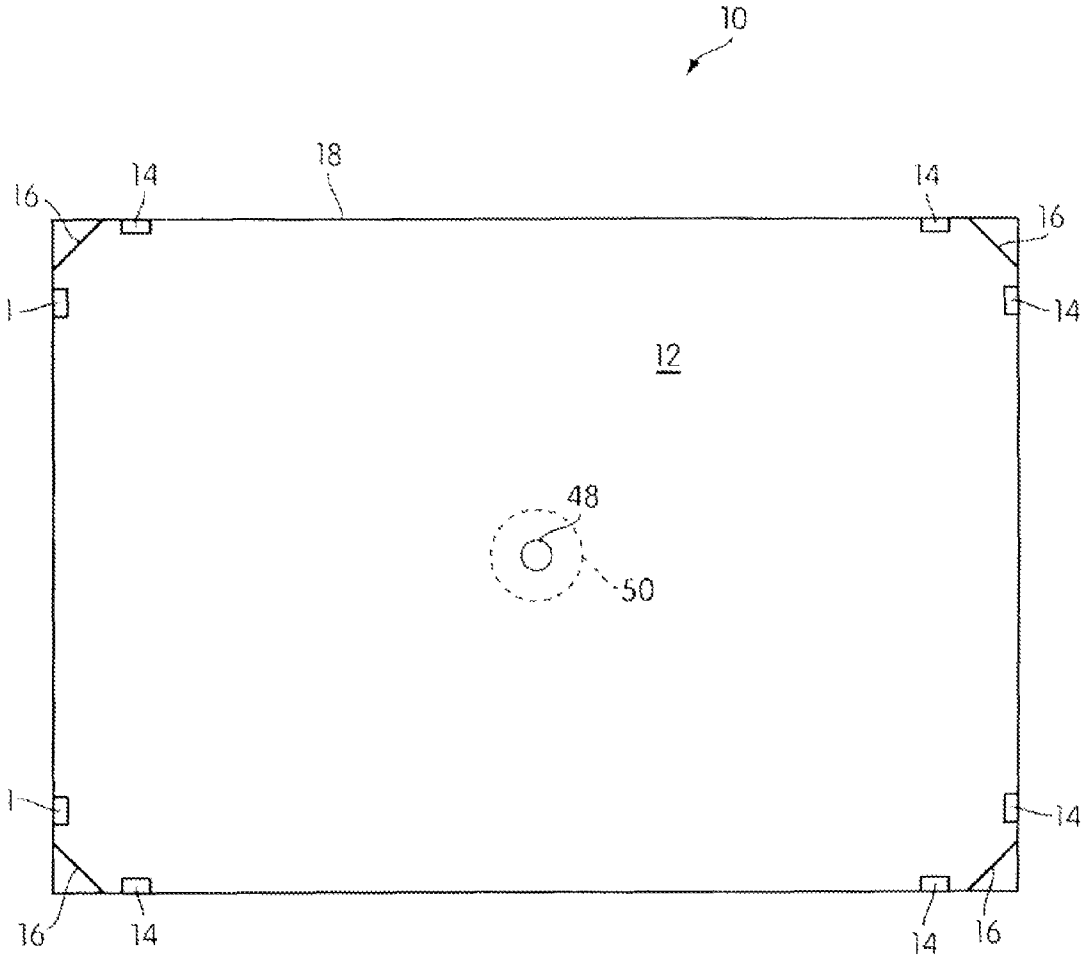

FIG. 4

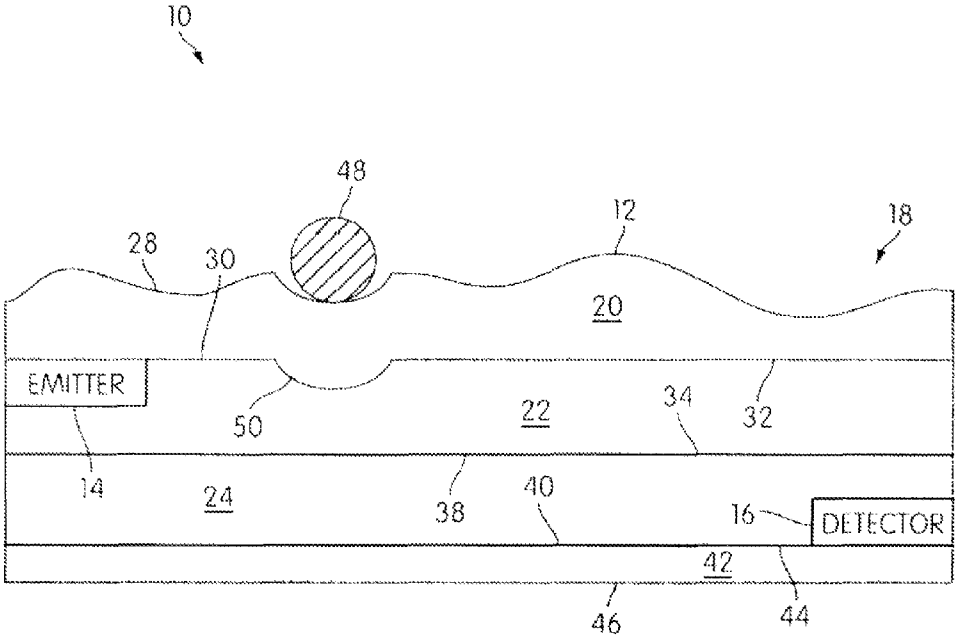
10
48
12
18
28
30
20
EMITTER
50
22
34
32
14
24
38
40
16
DETECTOR
42
46
44

FIG. 5

OPTICAL TOUCHPAD SYSTEM AND WAVEGUIDE FOR USE THEREIN

FIELD OF THE INVENTION

The invention relates to a optical touchpad system, with a multilayer waveguide that includes at least one total internal reflection mirror, for determining information relating to an engagement between an object and an interface surface of the optical touchpad system.

BACKGROUND OF THE INVENTION

Generally, touchpad systems are implemented for a variety of applications. Some of these applications include, computer interfaces, keypads, keyboards, and other applications. Various types of touch pads are known. Optical touch pads have certain advantages over some other types of touch pads at least for some applications. Various types of optical touchpad systems may be used in some or all of these applications. However, conventional optical touchpad systems may include various drawbacks. For example, conventional optical touchpad systems may be costly, imprecise, temperamental, fragile, energy inefficient, or may have other weaknesses and/or drawbacks. Further, conventional systems may require that an interface surface (e.g. a surface that is engaged by a user) have a generally planar, or otherwise uniform topology. Some conventional optical touchpads may require that light reach the interface surface to enable an object in engagement with the interface surface to interact with the light. Thus some, conventional optical touchpad systems may require that the interface surface be either (i) predominantly transparent, or (ii) predominantly opaque. These limitations on topology and/or opacity may restrict the use of these systems with respect to some of the applications for touchpad systems. Various other drawbacks exist with known touchpads, including optical touchpads.

SUMMARY OF THE INVENTION

One aspect of the invention relates to an optical touchpad system including a waveguide having a plurality of waveguide layers. For example, the waveguide may include an interface layer, an irradiation layer, a signal layer, and/or other layers. The interface layer may be defined by a first surface, a second surface and a relatively rigid material between the first and the second surface of the interface layer. The material between the first and the second surface of the interface layer may be opaque and/or or may be transparent. The material forming the interface layer may have a first index of refraction. The irradiation layer may be defined by a first surface, a second surface and may include a relatively pliable, transparent material having a second index of refraction that is greater than the first index of refraction. The signal layer may be defined by a first surface, a second surface and a transparent material having a third index of refraction that is less than the second index of refraction between the first and the second surface of the signal layer.

The first surface of the interface layer may comprise an interface surface. The interface surface may be configured to be engaged by a user by use of an animate object (e.g., one or more finger) or an inanimate object (e.g., a stylus or other object). The engagement may include the user depressing a portion of the interface surface. The second surface of the interface layer may be located adjacent to the first surface of the irradiation layer. The second surface of the irradiation layer may be adjacent to the first surface of the signal layer. At the boundary between the interface layer and the irradiation layer a reflective surface may be formed to reflect light incident on the boundary from within the irradiation layer back into the irradiation layer. In some instances, the reflective surface may include a first total internal reflection mirror created by the first and second refractive indices of the materials in the interface layer and the irradiation layer. The first total internal reflection mirror may have a first critical angle. The boundary between the irradiation layer and the signal layer may form a second total internal reflection mirror having a second critical angle. The second total internal reflection mirror may be configured to reflect light incident on the second total internal reflection mirror from within the irradiation layer back into the irradiation layer.

In some instances, including implementations in which the interface layer includes an opaque material between the first and the second surfaces of the interface layer, the waveguide may be configured to reflect light at the boundary between the interface layer and the irradiation layer by reflection other than total internal reflection. For example, a reflective layer may be disposed between the interface layer and the irradiation layer (e.g., by applying a thin film, by sputtering a coating or film, etc.) that reflects light from with the irradiation layer back into the irradiation layer without substantial variation based on the angle of incidence of the light. As another example, the opaque material between the first and second surfaces of the interface layer may inherently provide reflection at the boundary between the interface layer and the irradiation layer by reflection other than total internal reflection (e.g., the material includes a metal). As yet another example, one or more interference mirrors may be provided at the boundary between the interface layer and the irradiation layer to reflect radiation appropriately.

At least one of the layers (e.g. the irradiation layer) may be optically coupled to one or more electromagnetic radiation emitters to receive electromagnetic radiation (e.g., light) emitted therefrom. One or more of the layers (e.g., the signal layer) may be optically coupled to one or more sensors.

In operation, according to one embodiment, light received by the irradiation layer is normally trapped within the irradiation layer at least in part by reflection at the boundary between the interface layer and the irradiation layer (e.g., total internal reflection, etc.) and by total internal reflection at the total internal reflection mirror formed at the boundary between the irradiation layer and the signal layer. Engagement of the interface surface with an object causes the irradiation layer to at least partially deform. This deformation of the irradiation layer may interact (e.g., deflect, scatter, etc.) with the light, or other electromagnetic radiation, in the irradiation layer, such that the angle of incidence of at least a portion of the light incident on the second surface of the irradiation layer, which is normally trapped within the irradiation layer, becomes incident on the second surface of the irradiation layer with an angle of incidence that is less than the critical angle of the total internal reflection mirror formed at the second surface by the boundary between the irradiation layer and the signal layer. Thus, this light is leaked from the irradiation layer to the signal layer. The leaked light is then guided to the one or more sensors at least in part by reflection at the second surface of the signal layer. The one or more sensors may detect one or more properties of the light to determine information about the engagement of the interface surface and the object (e.g., the position of engagement, the force applied to the interface surface by the object, etc.).

This configuration of optical touchpad provides various advantages over known touchpads. For example, the optical touchpad that may be able to function independent from a

topology and/or opacity of an interface surface of the optical touchpad. This may enable the interface surface to be composed of any of a variety of materials (e.g., metal, wood, colored glass, colored polymers, clear glass, clear polymers, etc.). This may further enable the interface surface to include various topologies adapted for different applications in which the optical touchpad may be employed (e.g., appliances, doorbells, remote controls, personal electronics, keyboards, antiglare finishes, camera lenses, scroll buttons, tactile control input, Braille text, joysticks, applicable buttons, etc.). The operation of the optical touchpad may further enable an enhanced frame rate, reduced optical noise in the optical signal(s) guided to the one or more sensors, augment the ruggedness of the optical touchpad, and/or provide other advantages.

In some implementations, the optical touchpad system comprises one or more emitters, one or more sensors, a waveguide, and one or more processors. The emitters emit electromagnetic radiation, and may be optically coupled with the waveguide so that electromagnetic radiation emitted by the emitters may be directed into the waveguide. The detectors may be configured to monitor one or more properties of electromagnetic radiation. For instance, the one or more properties may include intensity, directionality, frequency, amplitude, amplitude modulation, and/or other properties. The detectors may include one or more photosensitive sensors that receive electromagnetic radiation, and output one or more output signals that are indicative of one or more of the properties of the received electromagnetic radiation. The detectors may be optically coupled to the waveguide to receive electromagnetic radiation from the waveguide, and may output one or more output signals that are indicative of one or more properties of the electromagnetic radiation received from the waveguide. The processor may be operatively coupled with the detectors to receive the one or more output signals generated by the detectors. Based on the received output signals, the processor may determine information about an engagement between an object and an interface surface of the optical touchpad system formed by the waveguide.

These and other objects, features, benefits, and advantages of the invention will be apparent through the detailed description of the preferred embodiments and the drawings attached hereto. It is also to be understood that both the foregoing general description and the following detailed description are exemplary and not restrictive of the scope of the invention.

BRIEF DESCRIPTION OF THE DRAWINGS

FIG. **1** illustrates a side elevation of an optical touchpad system, in accordance with one or more embodiments of the invention.

FIG. **2** illustrates an arrangement of an emitter within an optical touchpad system, according to one or more embodiments of the invention.

FIG. **3** illustrates a side elevation of an optical touchpad system being engaged by an object, in accordance with one or more embodiments of the invention.

FIG. **4** illustrates a aerial view of an optical touchpad system, according to one or more embodiments of the invention.

FIG. **5** illustrates a side elevation view of an optical touchpad system with an interface surface that has a non-planar topology, in accordance with one or more embodiments of the invention.

DETAILED DESCRIPTION

FIG. **1** illustrates an optical touchpad system **10** according to one or more embodiments of the invention. Optical touchpad system **10** may include an interface surface **12**, one or more emitters **14**, one or more detectors **16**, and a waveguide **18**. Interface surface **12** is configured such that a user can engage interface surface **12** with an object (e.g., a fingertip, a stylus, etc.). Optical touchpad system **10** detects a position of the engagement between interface surface **12** and the object.

Emitters **14** emit electromagnetic radiation, and may be optically coupled with waveguide **18** so that electromagnetic radiation emitted by emitters **14** may be directed into waveguide **18**. Emitters **14** may include one or more Organic Light Emitting Devices ("OLEDs"), lasers (e.g., diode lasers or other laser sources), Light Emitting Devices ("LEDs"), Hot Cathode Fluorescent Lamps ("HCFLs"), Cold Cathode Fluorescent Lamps ("CCFLs") incandescent lamps, halogen bulbs, received ambient light, and/or other electromagnetic radiation sources. In some embodiments, emitters **14** may be disposed at the periphery of waveguide **18** in optical touchpad system **10** (e.g., as illustrated in FIG. **1**). However, this is not limiting and alternative configurations exist. For example, emitters **14** may be disposed away from waveguide **18** and electromagnetic radiation produced by emitters **14** may be guided to waveguide **18** by additional optical elements (e.g., one or more optical fibers, etc.). As another example, some or all of emitters **14** may be embedded within waveguide **18** beneath interface layer **12** at locations more central to optical touchpad system than those shown in FIG. **1**.

Detectors **16** may monitor one or more properties of electromagnetic radiation. For instance, the one or more properties may include intensity, directionality, frequency, amplitude, amplitude modulation, and/or other properties. Detectors **16** may include one or more photosensitive sensors (e.g., one or more photosensitive diodes, CCD arrays, CMOS arrays, line sensors etc.) that receive electromagnetic radiation, and may output one or more output signals that are indicative of one or more of the properties of the received electromagnetic radiation. As will be discussed further below, detectors **16** may include spatial filters (e.g., one or more apertures, slits, sets of slits, refractive elements, etc.) to filter the electromagnetic radiation before it becomes incident on the photosensitive sensor(s). In some implementations, detectors **16** may be optically coupled to waveguide **18** to receive electromagnetic radiation from waveguide **18**, and may output one or more output signals that are indicative of one or more properties of the electromagnetic radiation received from waveguide **18**. Based on these output signals, information about the engagement between the object and interface surface **12** may be determined (e.g., position, force of engagement, etc.)

In some implementations, waveguide **18** may include a plurality of waveguide layers. For example, waveguide **18** may include an interface layer **20**, an irradiation layer **22**, a signal layer **24**, and/or other layers. Waveguide **18** may receive electromagnetic radiation from emitters **14** and direct a portion of the received electromagnetic radiation to detectors **16** such that information regarding the engagement between the object and interface surface **12** may be determined.

As can be seen in FIG. **1**, interface layer **20** may be defined by a first surface **28**, a second surface **30** and may be formed of a flexible, relatively rigid material disposed between first and second surfaces **28** and **30**. For instance, interface layer **20** may be formed from metal, wood, colored class, colored polymers, ceramics, polyethylene terephthalate ("PET"), polycarbonate, silicone, polyurethane, FEP, and/or other materials. In some implementations, the material forming interface layer **20** may be transparent to enable electromagnetic radiation to pass into and out of waveguide **18** via

interface surface **12**. However, this is not always the case, as will be discussed further below. Interface layer **20** may include a material having a first index of refraction. Although interface layer **20** is shown in FIG. **1** as a single contiguous layer, in some implementations, interface layer **20** may be a composite layer including a plurality of separate layers of the same, or different, materials. For instance, in implementations in which interface layer **20** includes substantially opaque interface surface **12**, interface layer **20** may include a first layer that provides interface surface and a second layer disposed between the first layer and irradiation layer **22** that is formed from a material that is not opaque (e.g., transparent) and has a predetermined index of refraction (e.g., the first index of refraction).

Irradiation layer **22** may be defined by a first surface **32** and a second surface **34**, and may be formed from a transparent material having a second index of refraction. For example, irradiation layer **22** may be formed from glass, PET, polycarbonate, silicone, PP, ABS, polyurethane, and/or other transparent materials. In some instances, the transparent material that forms irradiation layer **22** may be relatively pliable. In various ones of these instances, the pliability of irradiation layer **22** may be a known value.

In implementations in which interface layer **20** includes a layer formed from a transparent material, the second index of refraction may be greater than the first index of refraction. Irradiation layer **22** is illustrated in FIG. **1** as being disposed adjacent to interface layer **20** within waveguide **18** such that second surface **30** of interface layer **20** is near or in contact with first surface **32** of irradiation layer **22**. Irradiation layer **22** may be optically coupled with emitters **14** to receive electromagnetic radiation therefrom. In some instances, additional optical components (not shown) may guide radiation emitted by emitters **14** into irradiation layer **22**. In some other instances, emitters **14** may be integrally formed within, or positioned directly adjacent to, irradiation layer **22**.

Turning briefly to FIG. **2**, in some implementations, absorption materials **26** that absorb electromagnetic radiation emitted by emitters **14** at relatively low angles of incidence to the surfaces that bound irradiation layer **22** may be provided within waveguide **18**. In the implementations illustrated in FIG. **2**, emitter **14** may include a side emitting OLED formed within irradiation layer **22**. Absorption material **26** may be provided adjacent to irradiation layer **22** and may extend out from emitter **14** to a predetermined distance to absorb some of the radiation emitted by emitter **14**. Absorption material **26** may be substantially index matched to one or both of interface layer **20** and signal layer **24**, thereby ensuring that substantially any angles of incident light that would not be totally internally reflected at the boundary between irradiation layer **22** and interface layer **20** and/or the boundary between irradiation layer **22** and signal layer **24** may be absorbed. Absorption material **26** may be applied by print, by paint, by UV cure, by heat cure, or by other methods. Absorption material **26** may include paint, silicone, polymer, emerald, or other materials.

Returning to FIG. **1**, in some instances, the difference between the first index of refraction and the second index of refraction may create a total internal reflection mirror at the boundary between interface layer **20** and irradiation layer **22**. The total internal reflection mirror at the boundary between interface layer **20** and irradiation layer **22** may have a predetermined critical angle (illustrated in FIG. **1** as θ_1). Electromagnetic radiation (illustrated in FIG. **1** as electromagnetic radiation **36**) that becomes incident on the total internal reflection mirror formed between interface layer **20** and irradiation layer **22** from within irradiation layer **22** with an angle of incidence (illustrated in FIG. **1** as ϕ_1) greater than critical angle θ_1 may be reflected back into irradiation layer **22** by total internal reflection.

As shown in FIG. **1**, signal layer **24** may be defined by a first surface **38**, a second surface **40**, and may be formed from a transparent material having a third index of refraction. In some instances, the third index of refraction is less than the second index of refraction. In instances in which interface layer **20** is formed from a transparent material, the third index of refraction may be less than the second index of refraction but greater than the first index of refraction. Signal layer **24** may be disposed within waveguide **18** adjacent to irradiation layer **22** such that first surface **38** of signal layer **24** is at or near second surface **34** of irradiation layer **22**. The difference between the second index of refraction and the third index of refraction may create a total internal reflection mirror at the boundary between irradiation layer **22** and signal layer **24** with a predetermined critical angle (illustrated in FIG. **1** as θ_2). The total internal reflection mirror formed at the boundary between irradiation layer **22** and signal layer **24** may totally internally reflect electromagnetic radiation (illustrated in FIG. **1** as electromagnetic radiation **36**) that is incident on the total internal reflection mirror from within irradiation layer **22** at an angle of incidence (illustrated in FIG. **2** as ϕ_2) greater than critical angle θ_2. For various purposes, some of which are discussed below, the material (or materials) used to form signal layer **24** may be relatively rigid.

In some implementations (not shown), one or more auxiliary and/or boundary layers may be disposed between irradiation layer **22** and signal layer **24**. In these implementations, the additional layers may be transparent, and may be formed with an appropriate index of refraction (or indices of refraction) so as to form one or more total internal reflection mirrors. The one or more total internal reflection mirrors formed by the auxiliary and/or boundary layers may perform some or all of the functionality described herein as being provided by the total internal reflection mirror formed at conjunction of surfaces **34** and **38** in the implementation illustrated in FIG. **1**.

Signal layer **24** may be bounded on second side **40** by a base layer **42**. Base layer **42** may be defined by a first surface **44** and a second surface **46**. In some implementations, such as the implementations illustrated in FIG. **1**, base layer **42** may be included as a layer in waveguide **18**. In these implementations, second surface **46** may comprise a mounting surface configured to be mounted to a base object. The base object may include virtually any object on which touchpad system **10** may be used as a touchpad. For example, the base object may include an electronic display (e.g., a display monitor, a mobile device, a television, etc.), a keypad, a keyboard, a button, an appliance (e.g., a stove, an air conditioner unit, a washing machine, etc.), a control panel (e.g., an automobile control panel, an airplane control panel, etc.), or other base objects.

In some instances, base layer **42** may be formed from a material with a fourth index of refraction less than the third index of refraction such that a total internal reflection mirror may be formed at the boundary between signal layer **24** and base layer **42**. The total internal reflection mirror formed between signal layer **24** and base layer **42** may have a predetermined critical angle θ_3. Electromagnetic radiation incident on the total internal reflection mirror from within signal layer **24** at an angle of incidence greater than critical angle θ_3 may be totally internally reflected back into signal layer **24**.

As was mentioned above, in some implementations, base layer **42** may not be included as a layer in waveguide **18**. In these implementations, base layer **42** may be formed as an

integral part of the base object on which waveguide **18** is disposed. For instance, base layer **42** may include a glass (or other suitable material) layer that forms the screen of an electronic or other display. In other implementations (not shown), base layer **42** may be included in waveguide **18** as a composite layer formed from a plurality of sub-layers.

As is illustrated in FIG. **1**, signal layer **24** may be optically coupled to detectors **16** to provide electromagnetic radiation thereto, as will be discussed further below. In some implementations, detectors **16** may be integrally formed within, or positioned directly adjacent to, signal layer **24** to receive electromagnetic radiation from signal layer **24**. In some other implementations, additional optical components (not shown) may be provided to direct radiation from signal layer **24** to detectors **16**. For example, the additional optical components may include one or more optical fibers and/or other components capable of guiding electromagnetic radiation.

As was previously discussed, in some implementations, interface layer **20** and/or base layer **42** may be transparent. This may enable a user of touchpad system **10** to view an image through waveguide **18** (e.g., formed on the base object). For instance, in these implementations the user may view an image formed by an electronic or other display (e.g., backlit display, reflective display, etc.), a printed image formed on the base object beneath waveguide **18**, or other images formed by the base object. As was discussed above with respect to interface layer **20**, in some implementations, interface layer **20** and/or base layer **42** may include a plurality of layers including at least one layer that is substantially opaque. In this implementations, the substantially opaque layer may be bounded by a transparent layer having an index of refraction that enables total internal reflection at the boundary of interface layer **20** and/or base layer **42** as described above. However, in other implementations, all or a portion of one or both of interface layer **20** and base layer **42** may be substantially opaque, and radiation may be reflected within waveguide **18** at the boundary between interface layer **20** and irradiation layer **22** (e.g., first surface **32**), and/or the boundary between signal layer **24** and base layer **42** by reflection other than total internal reflection. For example, the reflection may be a product of a reflective layer or coating disposed at these boundaries to reflect electromagnetic radiation back into irradiation layer **22** and/or signal layer **24**. As another example, one or more interference mirrors may be provided to reflect radiation appropriately at these boundaries.

FIG. **3** illustrates one or more aspects of the operation of optical touchpad system **10**, according to one or more implementations of the invention. In FIG. **3** a user has engaged interface surface **12** with an object **48** (e.g., a stylus, a fingertip, etc.). The force of the engagement between object **48** and interface surface **12** may deform interface layer **20** into waveguide **18**, thereby compressing the relatively pliable irradiation layer **22**, forming an indention **50** in first surface **32**. Due to the irregularity of first surface **32** at indention **50**, a portion of the electromagnetic radiation (illustrated in FIG. **3** as electromagnetic radiation **52**) emitted by emitters **14** and trapped within irradiation layer **22** by total internal reflection between irradiation layer **22** and signal layer **24** may be deflected such that it becomes incident on the total internal reflection mirror formed between irradiation layer **22** and signal layer **24** at an angle of incidence (illustrated in FIG. **2** as ϕ_3) less than the critical angle θ_2 of this total internal reflection mirror. Rather than remaining trapped within irradiation layer **22** by total internal reflection, electromagnetic radiation **52** may pass through the total internal reflection mirror formed at the boundary of irradiation layer **22** and signal layer **24**, and into signal layer **24**. Electromagnetic radiation **52** that passes into signal layer **24** may be reflected at the boundary between signal layer **24** and base layer **42** back toward irradiation layer **22**.

As can be seen in FIG. **3**, electromagnetic radiation **52** may then be guided through waveguide **18** passing back and forth between signal layer **24** and irradiation layer **22** until it becomes incident on detectors **16** via signal layer **24**. Based on the output signals generated by detectors **16** in response to the receipt of electromagnetic radiation **52**, information related to the engagement between object **48** and interface surface **12** may be determined. For instance, the position of the engagement between object **48** and interface surface **12** with respect to interface surface **12** may be determined, the force applied to interface surface **12** by object **48** may be determined, or other information may be determined.

It should be appreciated that although irradiation layer **22** is illustrated in FIG. **3** as being pliable, and signal layer **24** is illustrated in FIG. **3** as being relatively rigid, that this disclosure is not intended to be limiting. For instance, irradiation layer **22** may be formed from a relatively rigid material and signal layer **24** may be formed from a relatively pliable material. In such a configuration, engagement of object **48** with interface surface would deform waveguide **18** such that indention **50** would still be formed in first surface **32** and a corresponding indention would also be formed at the boundary between irradiation layer **22** and signal layer **24**.

It should further be appreciated that the configuration of waveguide **18** with irradiation layer **22** disposed between signal layer **24** and interface surface **12** is not intended to be limiting. For example, in other implementations, the positions of irradiation layer **22** and signal layer **24** in FIG. **3** may be switched. In these implementations various aspects of the operation of optical touchpad system **10** may remain unchanged. For instance, in these implementations, an indentation may be formed in irradiation layer **22** as a result of an engagement between interface surface **12** and an object, and the indentation may enable radiation to be leaked from irradiation layer **22** to signal layer **24**. The leaked radiation may then be directed to detectors **16** at least in part by total internal reflection at a boundary of signal layer **24** opposite from irradiation layer **22**.

FIG. **4** illustrates a top view of optical touchpad system **10**, according to one or more implementations of the invention. In the implementations illustrated in FIG. **4**, waveguide **18** provides a substantially rectangular interface surface **12** with clusters of emitters **14** and detectors **16** provided at each corner. It should be appreciated that this shape of interface surface **12** and arrangement of emitters **14** and detectors **16** is for illustrative purposes only, and that alternative configurations of these features are contemplated. For instance, in other implementations, arrays of emitters and detectors may be disposed substantially adjacent to each other in a manner that generally surrounds waveguide **18** with emitters and detectors. Other configurations are also contemplated.

Detectors **16** in the implementations of FIG. **4** may include directional sensors adapted to determine the direction of a source of radiation. For example, each of detectors **16** may include an optical element and a line sensor, wherein the optical element directs electromagnetic radiation onto the line sensor in such a manner that the direction of the source of the electromagnetic radiation can be determined. For instance, the optical element may include one or more apertures, and/or may incorporate a refractive element. Some implementations of suitable directional sensors are described in U.S. patent application Ser. No. 10/507,018, filed Mar. 12,

2003, and entitled "TOUCH PAD, A STYLUS FOR USE WITH THE TOUCH PAD, AND A METHOD OF OPERATING THE TOUCH PAD".

As object **48** is engaged with interface surfaced **12**, indention **50** created by this engagement causes a portion of the electromagnetic radiation emitted into waveguide **18** by emitters **14** to be deflected out of irradiation layer **22** into signal layer **24** (as was illustrated in FIG. **3**). In effect, this introduction of electromagnetic radiation into signal layer **24** acts similar to a source of electromagnetic radiation emitting the electromagnetic radiation into signal layer **24**. Thus, as the electromagnetic radiation deflected into signal layer **24** reaches detectors **16**, each of detectors **16** outputs one or more output signals that enable detection of the direction of indention **50** with respect to that detector **16**. Using conventional triangulation techniques, detections of the direction to indention **50** with respect to detectors **16** based on the output signals of detectors **16** may be combined to determine the position of the engagement between object **48** and interface layer **12** (e.g., indentation **50**). It should be appreciated that although FIG. **4** illustrates optical touchpad system **10** as including four detectors **16** (which would enable four separate directional detections of indentation **50**), other implementations may employ triangulation using more or less detectors **16**.

In some implementations, the emission of electromagnetic radiation from emitters **14** may be modulated so that electromagnetic radiation emitted by one or more of emitters **14** may be differentiated from electromagnetic radiation emitted by others of emitters **14**. For instance, in the implementation illustrated in FIG. **4**, the emission of electromagnetic radiation by each of emitters **14** may be amplitude modulated at different frequencies. This may enable, based on the output signals of a given one of detectors **16**, determination of a direction from the given detector **16** in which an engagement between object **48** and interface surface **12** as described above, but it may further enable a determination as to the amount of electromagnetic radiation from each of emitters **14** that is being guided from the engagement to the given detector **16**. Implementations including this feature of modulation (e.g., amplitude modulation) of the electromagnetic radiation emitted by emitters **14** may demonstrate an augmented ability to discern information (e.g., position information, pressure information, etc.) related to simultaneous engagements between two or more objects and interface surface **12** at different positions (e.g., information about two separate engagements between two different fingertips of a user and interface surface **12**).

It should be appreciated that the implementation described above, in which each of emitters **14** in FIG. **4** are modulated to enable differentiation between the electromagnetic radiation emitted by each of the various emitters **14** is not intended to be limiting. For example, emitters **14** may be frequency modulated and/or controlled (e.g., modulating or otherwise controlling the color of the light emitted by emitters **14**) rather than amplitude modulated. As another example, in other implementations groups of emitters may be modulated in a substantially identical manner to enable differentiation between electromagnetic radiation emitted by the different groups of emitters **14**. As an example of this in optical system **10** illustrated in FIG. **4**, the emitters **14** located at each corner of waveguide **18** may be amplitude modulated at the same frequency, which may be different than the modulation frequency of emitters **14** disposed at the other corners of waveguide **18**.

As has been mentioned briefly above, information about the engagement between object **48** and interface surface **12** may be determined based on the output signals generated by detectors **16**. For instance, information related to the force applied by object **48** onto interface surface **12** (e.g., the pressure of the engagement) may be determined. Referring back to FIG. **3**, as the force applied by object **48** on interface surface **12** increases, object **48** may be pressed further into waveguide **18**, thereby increasing the size of indention **50**. As can be seen in FIG. **3**, as the size of indention **50** increases, the amount of electromagnetic radiation traveling within irradiation layer **22** deflected by indention **50** also increases, which may cause an increase in the amount of electromagnetic radiation introduced into signal layer **24** that will eventually propagate within waveguide **18** to detectors **16** in the manner illustrated by FIG. **3**. If irradiation layer **22** has a known pliability curve, emitters **14** emit a known quantity of electromagnetic radiation (e.g., a known number of photons), and detectors **16** have a known quantum efficiency, then the force applied to interface surface **12** by object **48** may be determined from a calculation of the amount of electromagnetic radiation guided to detectors **16** based on the output signals generated by detectors **16**.

In some implementations, emitters **14** and/or detectors **16** may be operatively coupled to one of more processors. The processors may be operable to control the emission of electromagnetic radiation from emitters **14**, receive and process the output signals generated by detectors (e.g., to calculate information about engagements between objects and interface surface **12** as described above), or provide other processing functionality with respect to optical touchpad system **10**. In some instances, the processors may include one or more processors external to optical touchpad system **10** (e.g., a host computer that communicates with optical touchpad system **10**), one or more processors that are included integrally in optical touchpad system **10**, or both. For example, the processors may include one or more semi-conductive device (e.g., an ASIC, an FPGA, etc.), or other processors, integrated with one or more of detectors **16**. These processors may be operatively connected with one or more external processors. The external processors may, in some cases, provide redundant processing to the processors that are integrated with detectors **16**, and/or the external processor may provide additional processing to determine additional information related to an engagement between interface surface **12** and an object. For instance, the integrated processors may determine a position of the engagement and the external processors may determine a force applied by the object to interface surface **12**.

Referring to FIG. **5**, optical touchpad system **10** is illustrated including an alternative interface layer **20**, according to one or more implementations of the invention. As illustrated in FIG. **5**, interface layer **20** may be of varying thickness such that interface surface **12** is provided with a non-planar topology. This feature may be implemented in instances in which interface layer **20** includes transparent and/or opaque materials. Unlike some other optical touchpad systems, the irregular topology of interface surface **12** may not interfere with determining accurate information related to the engagement between object **48** and interface surface **12** in part because optical touchpad surface **10** may not require electromagnetic radiation to pass into and out of waveguide **18** at interface surface **12** in a regular or predictable manner in order to operate.

Due to this ability to provide reliable information about the engagement between object **48** and interface surface **12** when interface surface **12** has a non-planar topology and/or is opaque, optical touchpad system **10** may be suitable for a variety of applications where other conventional optical touchpads may not produce reliable results. For example,

optical touchpad system **10** may be configured such that clearly formed buttons are formed in interface surface **12** (e.g., as individual raised areas). These buttons may even incorporate raised and/or depressed portions formed on individual buttons (e.g., for Braille markings on the buttons, which may enhance a human/machine interface designed for blind individuals, etc.). In some instances, optical touchpad system **10** may be formed such that interface surface **12** forms an entire keyboard (e.g., a QWERTY keyboard, a Latin keyboard with a different configuration, a keyboard comprising characters other than Latin, etc.) and scroll pad area as a single unit such that optical touchpad system **10** may be incorporated into a laptop computer as the input portion of the computer. Similarly, optical touchpad system **10** may be provided as the keypad in a remote control, a mobile phone, a personal digital assistant, or other wireless client device. In other instances, the topology of interface surface **12** may be shaped into a game controller (e.g., a joystick, etc.) with one or more directional inputs, one or more buttons, and/or one or more other control inputs.

The ability to provide reliable information about the engagement between object **48** and interface surface **12** when interface surface **12** has a non-planar topology and/or is opaque may further enable users to alter and/or customize interface surface **12**. For example, a user may provide opaque markings on interface surface **12** (e.g., by pen, by sticker, etc.). As another example, a user may provide customized topographic features to interface surface **10**. For instance, a blind user may provide a interface surface **12** with Braille and/or other symbols to facilitate control over an electronic apparatus. As another example, the user may create a customizable interface (e.g., a keyboard) by placing topographical features (e.g., keys, buttons, joysticks, etc.) on interface surface **12**. Other uses of this feature of enabling user alteration and/or customization of interface surface **12** exist.

In some implementations, one or more of emitters **14**, detectors **16**, electronic circuitry, or other components of optical touchpad system **10** may be integrally formed with waveguide **18**. For example, these components may be printed, laminated, or otherwise integrally formed within one or more of layers **20**, **22**, **24**, or **42** prior to, or concurrent with, the combination of layers **20**, **22**, **24**, and/or **42** in waveguide **18**. This may reduce an overall cost of manufacturing optical touchpad system **10**, enhance a robustness or ruggedness of optical touchpad system **10**, increase an accuracy of alignment of the components in optical touchpad system **10**, or provide other advantages. In some instances, one or more of emitters, **14**, detectors **16**, electronic circuitry, or other components may be formed integrally into one or more waveguide layers separate from waveguide **18**, and then the one or more separate waveguide layers may be attached to waveguide **18** to optically couple the components formed on the separate waveguide layer(s) with irradiation layer **22** and/or signal layer **24**.

Other embodiments, uses and advantages of the invention will be apparent to those skilled in the art from consideration of the specification and practice of the invention disclosed herein. The specification should be considered exemplary only, and the scope of the invention is accordingly intended to be limited only by the following claims.

What is claimed is:

1. An optical touchpad system comprising:

one or more emitters configured to emit electromagnetic radiation;

one or more sensors configured to receive electromagnetic radiation and output one or more output signals that correspond to one or more properties of the received electromagnetic radiation;

a waveguide that guides a portion of the electromagnetic radiation emitted by the emitters to the sensors, the waveguide comprising:

an irradiation layer that is optically coupled to the one or more emitters to receive electromagnetic radiation emitted therefrom,

an interface surface spaced apart from the irradiation layer, the interface surface being configured to be engaged by a user with an object; and

a signal layer separate from the irradiation layer that is optically coupled to the one or more sensors,

wherein the waveguide is configured such that (i) if the interface surface is not deformed, the electromagnetic radiation received by the irradiation layer from the one or more emitters is kept wholly within the irradiation layer by total internal reflection, and (ii) if the interface surface is engaged with the object such that the engagement therebetween causes a local deformation in the irradiation layer, wherein a first portion of an irradiation layer surface is deformed while a second portion of the irradiation layer surface is not deformed, such local deformation of the irradiation layer causing the portion of the electromagnetic radiation incident on the local deformation to be reflected towards the signal layer at an angle such that the portion of the electromagnetic radiation reflected at the local deformation is leaked from the irradiation layer into the signal layer and guided to the one or more sensors at least in part by reflection within the signal layer.

2. The optical touchpad system of claim **1**, further comprising one or more processors operatively coupled to the one or more sensors to receive the one or more output signals generated by the sensors, wherein the one or more processors determine the position on the interface surface of the engagement between the object and the interface surface based on the one or more output signals generated by the one or more sensors.

3. The optical touchpad system of claim **1**, wherein the irradiation layer is bounded on one side by a first surface that is generally planar and on a side opposite the first surface by a second surface that is generally planar and generally parallel to the first surface, and wherein the electromagnetic radiation trapped within the irradiation layer at least in part by total internal reflection is reflected at the first surface and totally internally reflected at or near a total internal reflection mirror formed at the second surface.

4. The optical touchpad system of claim **3**, wherein the electromagnetic radiation reflected at the first surface is reflected by a total internal reflection mirror formed at or near the first surface.

5. The optical touchpad system of claim **3**, wherein the local deformation of the irradiation layer comprises a local deformation of the first surface such that at least a portion of the electromagnetic radiation reflected by the first surface at the local deformation of the first surface is deflected out of the irradiation layer and into the signal layer.

6. The optical touchpad system of claim **1**, wherein the irradiation layer has a first index of refraction and the signal layer has a second index of refraction that is lower than the first index of refraction.

7. The optical touchpad system of claim **6**, wherein the signal layer is formed directly adjacent to the irradiation layer

such that the boundary between the signal layer and the irradiation layer forms a total internal reflection mirror.

8. The optical touchpad system of claim **1**, further comprising an interface layer that is bounded on one side by the interface surface, wherein at least a first portion of the interface layer at the interface surface is substantially opaque and at least a second portion of the interface layer at the interface surface is substantially transparent.

9. The optical touchpad system of claim **1**, further comprising an interface layer that is bounded on one side by the interface surface and on a side opposite from the interface surface by the irradiation layer.

10. The optical touchpad system of claim **1**, wherein the interface surface has topologically irregular features.

11. The optical touchpad system of claim **10**, wherein the topographically irregular features comprise one or more of a key, a button, or a joystick.

12. The optical touchpad system of claim **10**, wherein topologically irregular features comprise one or more topological features selectively positioned on the interface surface by a user to customize the interface surface.

13. A waveguide configured to receive electromagnetic radiation from one or more emitters and guides a portion of the received electromagnetic radiation to one or more sensors, the waveguide comprising:

a irradiation layer configured to be optically coupled to the one or more emitters to receive electromagnetic radiation emitted therefrom;

an interface surface spaced apart from the irradiation layer, the interface surface being configured to be engaged by a user with an object; and

a signal layer separate from the irradiation layer configured to be optically coupled to the one or more sensors;

wherein the waveguide is configured such that:

if the irradiation layer is receiving electromagnetic radiation from an optically coupled emitter, and if the interface surface is not deformed, the electromagnetic radiation received by the irradiation layer from the optically coupled emitter is kept wholly within the irradiation layer by total internal reflection, and

if the interface surface is engaged with the object and if there is electromagnetic radiation trapped within the irradiation layer at least in part by total internal reflection, the engagement between the object and the interface surface causes a local deformation in the irradiation layer, wherein a first portion of an irradiation layer surface is deformed while a second portion of the irradiation layer surface is not deformed, such local deformation of the irradiation layer causes the portion of the electromagnetic radiation incident on the local deformation to be reflected towards the signal layer at an angle such that the portion of the electromagnetic radiation reflected at the local deformation is (i) leaked from the irradiation layer into the signal layer and (ii) guided to the one or more sensors by reflection within the signal layer.

14. The waveguide of claim **13**, wherein the irradiation layer is bounded on one side by a first surface that is generally planar and on a side opposite the first surface by a second surface that is generally planar and generally parallel to the first surface, and wherein the electromagnetic radiation trapped within the irradiation layer at least in part by total internal reflection is reflected at the first surface and totally internally reflected at or near a total internal reflection mirror formed at the second surface.

15. The waveguide of claim **14**, wherein the electromagnetic radiation reflected at the first surface is reflected by a total internal reflection mirror formed at or near the first surface.

16. The waveguide of claim **14**, wherein the local deformation of the irradiation layer comprises a local deformation of the first surface such that at least a portion of the electromagnetic radiation reflected by the first surface at the local deformation of the first surface is deflected out of the irradiation layer and into the signal layer.

17. The waveguide of claim **13**, wherein the irradiation layer has a first index of refraction and the signal layer has a second index of refraction that is lower than the first index of refraction.

18. The waveguide of claim **17**, wherein the signal layer is formed directly adjacent to the irradiation layer such that the boundary between the signal layer and the irradiation layer forms a total internal reflection mirror.

19. The waveguide of claim **13**, further comprising an interface layer that is bounded on one side by the interface surface, wherein the interface layer is substantially opaque.

20. The waveguide of claim **13**, further comprising an interface layer that is bounded on one side by the interface surface and on a side opposite from the interface surface by the irradiation layer.

21. The waveguide of claim **13**, wherein the interface surface has topologically irregular features.

22. The waveguide of claim **21**, wherein the topographically irregular features comprise one or more of a key, a button, or a joystick.

23. The waveguide of claim **21**, wherein topologically irregular features comprise one or more topological features selectively positioned on the interface surface by a user to customize the interface surface.

* * * * *