UNITED STATES PATENT AND TRADEMARK OFFICE

BEFORE THE PATENT TRIAL AND APPEAL BOARD

ALIVECOR, INC.,
Petitioner

v.

APPLE INC.,
Patent Owner

Case No. IPR2023-00948
U.S. Patent No. 10,866,619

PATENT OWNER'S NOTICE OF APPEAL

Patent Owner Apple Inc. hereby provides notice of its appeal to the United States Court of Appeals for the Federal Circuit from the Final Written Decision of the Patent Trial and Appeal Board entered on January 7, 2025, in IPR2023-00948 (Paper No. 30) ("Final Written Decision"), and from all underlying findings, determinations, rulings, opinions, orders, issues, and decisions regarding the *inter partes* review of U.S. Patent No. 10,866,619 (the "'619 patent"). *See* 35 U.S.C. §§ 141–142, 319; 37 C.F.R. §§ 90.2–90.3; Fed. R. App. P. 15; Fed. Cir. R. 15. This notice is timely under 37 C.F.R. § 90.3, having been filed no later than 63 days after the Final Written Decision.

In accordance with 37 C.F.R. § 90.2(a)(3)(ii), Apple states that the issues on appeal include, but are not limited to: the Board's conclusion that claims 1–10 of the '619 patent are unpatentable; and any findings, analysis, or determinations supporting or related to that issue, including on motivation to combine, as well as all other issues decided adversely to Apple Inc. in any orders, decisions, rulings, or opinions in this proceeding.

This notice is being electronically filed with the clerk's office for the United States Court of Appeals for the Federal Circuit, along with payment of the required docketing fee. In addition, a true and correct copy of this notice is being filed simultaneously with the Director of the United States Patent and Trademark Office.

Dated: March 10, 2025

Respectfully submitted,

/Ryan Chowdhury/

W. Karl Renner, Reg. No. 41,265
Jeremy Monaldo, Reg. No. 58,680
Ryan Chowdhury, Reg. No. 74,466
Fish & Richardson P.C.
60 South Sixth Street, Suite 3200
Minneapolis, MN 55402
Tel: (202) 783-5070
Fax: (877) 769-7945

Attorneys for Patent Owner

CERTIFICATE OF SERVICE

Pursuant to 37 CFR § 42.6(e)(4), the undersigned certifies that on March 10, 2025, a complete and entire copy of this Patent Owner's Notice of Appeal was provided via email to the Petitioner by serving the correspondence address of record as follows:

Christopher TL Douglas
Scott M. Stevens
J. Ravindra Fernando
Thomas F. Finch
Erin Beaton
Alston & Bird LLP
christopher.douglas@alston.com
scott.stevens@alston.com
ravi.fernando@alston.com
thomas.finch@alston.com
erin.beaton@alston.com

Pursuant to 37 C.F.R. §§ 90.2(a)(1), I hereby certify that in addition to being filed electronically through the Board's P-TACTS System, this Patent Owner's Notice of Appeal is being provided to the Director of the USPTO on March 10, 2025, by electronically filing to the email address as follows:

Director of the United States Patent and Trademark Office
c/o Office of the General Counsel
efileSO@uspto.gov

I hereby certify that on March 10, 2025, a true and correct a copy of the foregoing Patent Owner's Notice of Appeal, along with a copy of the Final Written Decision, was filed electronically with the Clerk's Office of the United States Court of Appeals for the Federal Circuit, at the following address:

United States Court of Appeals for the Federal Circuit
717 Madison Place, N.W., Suite 401
Washington, DC 20005

Dated: March 10, 2025

Respectfully submitted,

/Ryan Chowdhury/

W. Karl Renner, Reg. No. 41,265
Jeremy Monaldo, Reg. No. 58,680
Ryan Chowdhury, Reg. No. 74,466
Fish & Richardson P.C.
60 South Sixth Street, Suite 3200
Minneapolis, MN 55402
Tel: (202) 783-5070
Fax: (877) 769-7945

Attorneys for Patent Owner

Trials@uspto.gov
571-272-7822

Paper 30
Date: January 7, 2025

UNITED STATES PATENT AND TRADEMARK OFFICE

BEFORE THE PATENT TRIAL AND APPEAL BOARD

ALIVECOR, INC.,
Petitioner,

v.

APPLE INC.,
Patent Owner.

Case IPR2023-00948
Patent 10,866,619 B1

Before KEN BARRETT, SCOTT A. DANIELS, and
ROBERT L. KINDER, *Administrative Patent Judges.*

DANIELS, *Administrative Patent Judge*.

JUDGMENT
Final Written Decision
Determining All Challenged Claims Unpatentable
35 U.S.C. § 318(a)

I. INTRODUCTION

AliveCor, Inc., ("AliveCor" or "Petitioner"), filed a Petition requesting *inter partes* review ("IPR") of claims 1–10 of U.S. Patent No. 10,866,619 B1 (Ex. 1001, "the '619 patent"). Paper 2 ("Pet."). Concurrently with this proceeding, and in accordance with guidance in our Consolidated Trial Practice Guide, ("Trial Practice Guide" or "CTPG"), Petitioner filed a parallel petition challenging different claims in the '619 patent.[1] Paper 3 ("Pet. Reasons"). Petitioner challenges claims 1–10 of the '619 patent here in IPR2023-00948 and challenges claims 11–20 of the '619 patent in concurrently filed IPR2023-00949. Apple Inc., ("Apple" or "Patent Owner"), filed a Preliminary Response to the Petition, mainly objecting to Petitioner's parallel petition. Paper 7 ("Prelim. Resp.").

Following our Institution Decision, (Paper 8, "Inst. Dec."), in which we declined to exercise our discretion not to institute trial on parallel petition IPR2022-00949, Patent Owner filed a Response (Paper 16 ("PO Resp.")). *See* Inst. Dec. 20–29. Petitioner subsequently filed a Reply. Paper 21 ("Pet. Reply"). Patent Owner then filed a Sur-Reply. Paper 24 ("PO Sur-Reply"). An oral hearing was held on Sept 25, 2024. A transcript of the hearing has been entered as Paper 29. ("Tr.").

We have jurisdiction under 35 U.S.C. § 6. This Final Written Decision is entered pursuant to 35 U.S.C. § 318(a). For the reasons explained below, we determine that Petitioner has met its burden of showing by a preponderance of the evidence that claims 1–10 are unpatentable.

[1] Our CTPG is available at https://www.uspto.gov/about-us/news-updates/consolidated-trial-practice-guide-november-2019

A. Real Parties in Interest

Petitioner states that AliveCor, Inc. is the real party in interest. Pet. 114. Patent Owner states that Apple Inc. is the sole real party in interest. Paper 4, 1.

B. Related Matters

The parties indicate that the '619 patent is at issue in *Apple Inc. v. AliveCor, Inc.*, Case No. 4:22-cv-07608, in the U.S. District Court for the Northern District of California. Pet. 114; Paper 4, 1. Petitioner filed another request for *inter partes* review including the '619 patent which the Board instituted, namely IPR2023-00949. Pet. 114. Petitioner indicates it has also filed a request for *inter partes* review of U.S. Patent No. 10,076,257 in IPR2023-00950. *Id.*

C. The '619 Patent (Ex. 1001)

The '619 patent issued December 15, 2020 and is titled "Electronic Device Having Sealed Button Biometric Sensing System." Ex. 1001, code (54). The '619 patent describes a biometric button assembly having an input member, e.g., a button, that is configured to receive inputs, for example a fingerprint and finger press from a user of the electronic device. *Id.* at code (57). Figure 1 of the '619 patent is reproduced below as annotated by the Board.

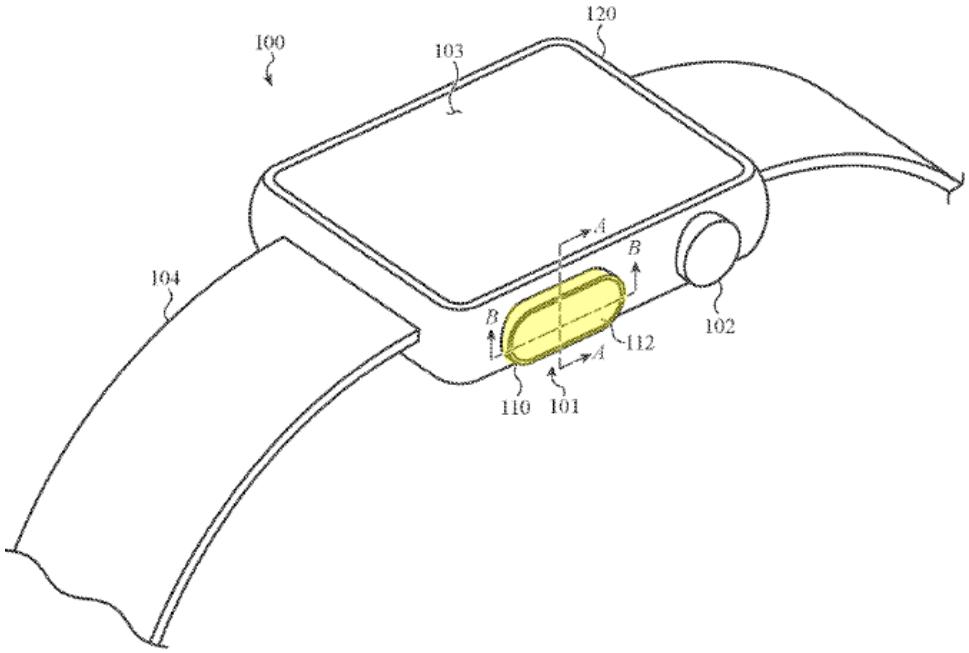

FIG. 1

Annotated Figure 1 illustrates electronic device 100, e.g., a watch, including biometric button assembly 110 highlighted in yellow. Figure 2B, as highlighted by the Board, is reproduced below.

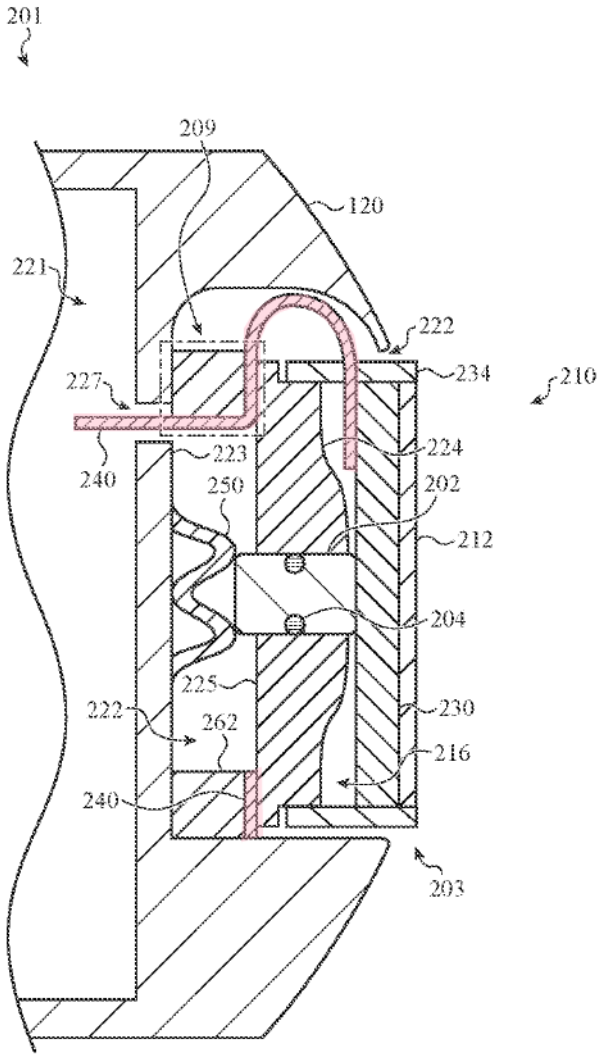

FIG. 2B

Annotated Figure 2B illustrates a cross sectional view of biometric button assembly 210 including button housing 203 in a depressed state. *Id.* at 8:41–45. Button housing 203 includes biometric sensor 230 and flexible conduit 240, highlighted in pink, that "receives the output signal of the biometric sensor 230 and provides the output signal to the processor of the electronic device 100." *Id.* at 9:11–13. Button housing 203 can be depressed by a user pressing on input surface 212 which "displaces into the opening 222 of the enclosure 120 to activate tactile switch 250." *Id.* at 8:27–29.

The '619 patent explains further that

> the biometric sensor 230 may be a fingerprint sensor of an array of capacitive sensing elements. Upon a user touch to the input surface 212, the biometric sensor 230 senses a change in capacitance or a value of capacitance of the array of capacitive sensing input surface 212. The biometric sensor 230 produces an output signal that includes the sensor measurements. The output signal corresponds to a fingerprint of the user. The output signal may be processed to determine the user fingerprint. The output signal is processed by a processor positioned in an enclosed volume 221 of the electronic device.

Id. at 9:1–10.

To prevent contaminants and liquids from entering into the watch, annotated Figure 2B also illustrates a sealing structure where "[t]he flexible conduit 240 portion [is] stacked on top of the seal 262 [and] is disposed below a sealing surface 225 of the button assembly 210." *Id.* at 9:30–32. Given this sealing structure, and with respect to claim 1, and specifically limitation [1f] as reproduced below, the '619 patent describes that the "flexible conduit or flexible connector [240] that transmits an output signal from the biometric sensor [230] to the processor may form part of a seal that blocks or inhibits the ingress or entry of foreign debris or contaminants into the enclosure 120." *Id.* at 5:56–60.

D. Illustrative Claim

Claim 1 is independent.[2] Each of claims 2–10 ultimately depends from independent claim 1. Claim 1 illustrates the claimed subject matter and is reproduced below:

[2] For consistency we use Petitioner's references [1pre]–[1f] corresponding to the respective claim limitations.

> [1pre] An electronic device comprising:
>
> [1a] an enclosure having an enclosed volume and an opening formed in a sidewall;
>
> [1b] a processor positioned in the enclosed volume;
>
> [1c] a button assembly within the opening, the button assembly comprising:
>
> [1c i] an input member having an input surface; and
>
> [1c ii] a biometric sensor positioned below the input member and configured to produce an output signal in response to a touch on the input surface, the output signal corresponding to a biometric characteristic;
>
> [1d] a seal positioned between a sealing surface of the button assembly and the enclosure; and
>
> [1e] a flexible conduit coupled to the biometric sensor and configured to transmit the output signal to the processor;
>
> wherein:
>
> [1f] a portion of the flexible conduit is sandwiched between the seal and the sealing surface or between the seal and the enclosure.

Ex. 1001, 26:64–27:15.

E. Prior Art and Asserted Grounds

Petitioner asserts that claims 1–10 would have been unpatentable based on the following grounds:[3]

[3] Petitioner supports its challenge with a declaration of Ronald D. Berger, M.D., Ph.D. (Ex. 1003). *See infra*. Patent Owner relies on the declaration of Brian W. Anthony, Ph.D. (Ex. 2009).

Ground	Claim(s) Challenged	35 U.S.C. §[4]	Reference(s)/Basis
1	1, 5, 9–10	102/103	Kim[5]
2	1–10	103	Kim
3	1, 3–10	103	Jung[6] and Meyers[7]
4	1–2, 6, 9	102/103	Chang[8]

II. ANALYSIS — CHALLENGED CLAIMS

A. Legal Standards

To prevail in its challenge to Patent Owner's claims, Petitioner must demonstrate that the claims are unpatentable, and that burden never shifts to the patentee. *Dynamic Drinkware, LLC v. Nat'l Graphics, Inc.*, 800 F.3d 1375, 1378 (Fed. Cir. 2015). Petitioner must prove unpatentability by a preponderance of the evidence. *See* 35 U.S.C. § 316(e); 37 C.F.R. § 42.1(d).

"A claim is anticipated only if each and every element as set forth in the claim is found, either expressly or inherently described, in a single prior art reference." *Verdegaal Bros., Inc. v. Union Oil Co. of Cal.*, 814 F.2d 628, 631 (Fed. Cir. 1987). To establish anticipation, "all of the elements and limitations of the claim must be shown in a single prior reference, arranged as in the claim." *Karsten Mfg. Corp. v. Cleveland Golf Co.*, 242 F.3d 1376, 1383 (Fed. Cir. 2001).

---

[4] The Leahy-Smith America Invents Act ("AIA") included revisions to 35 U.S.C. §§ 102, 103 that became effective on March 16, 2013. Pub. L. No. 112-29, §§ 3(b)–3(c), 3(n)(1), 125 Stat. 284, 285–87, 293 (2011). Because there is no dispute that the challenged claims have effective filing dates after March 16, 2013, we apply the AIA versions of the statutes. We would reach the same outcome, however, under the pre-AIA versions.
[5] Ex 1004, US Patent No. 10,620,828 B2 (Apr. 14, 2020).
[6] Ex. 1005, US Patent Appl'n Pub. No. 2016/0100499 A1 (Apr. 7, 2016).
[7] Ex. 1007, US Patent Appl'n Pub. No. 2015/0071509 A1 (Mar. 12, 2015).
[8] Ex. 1010, US Patent No. 10,133,910 B2 (Nov. 20, 2018).

A patent claim is unpatentable under 35 U.S.C. § 103 if the differences between the claimed subject matter and the prior art are such that the subject matter, as a whole, would have been obvious before the effective filing date of the claimed invention to a person having ordinary skill in the art to which said subject matter pertains. 35 U.S.C. § 103; *KSR Int'l Co. v. Teleflex Inc.*, 550 U.S. 398, 406 (2007). "[W]hen a patent claims a structure already known in the prior art that is altered by the mere substitution of one element for another known in the field, the combination must do more than yield a predictable result." *KSR*, 550 U.S. at 416 (citing *United States v. Adams*, 383 U.S. 39, 50–51 (1966)). The question of obviousness is resolved based on underlying factual determinations including: (1) the scope and content of the prior art; (2) any differences between the claimed subject matter and the prior art; (3) the level of ordinary skill in the art; and (4) when in evidence, objective evidence of non-obviousness, i.e., secondary considerations.[9] *Graham v. John Deere Co.*, 383 U.S. 1, 17–18 (1966).

B. Level of Ordinary Skill in the Art

In determining the level of ordinary skill in the art for a challenged patent, we look to "1) the types of problems encountered in the art; 2) the prior art solutions to those problems; 3) the rapidity with which innovations are made; 4) the sophistication of the technology; and 5) the educational level of active workers in the field." *Ruiz v. A.B. Chance Co.*, 234 F.3d 654, 666–667 (Fed. Cir. 2000). "Not all such factors may be present in every case, and one or more of them may predominate." *Id.* at 667.

In determining a level of ordinary skill, we also may look to the prior art, which may reflect an appropriate skill level. *Okajima v. Bourdeau*, 261

[9] Patent Owner does not present objective evidence of nonobviousness.

F.3d 1350, 1355 (Fed. Cir. 2001). Additionally, the Supreme Court informs us that "[a] person of ordinary skill is also a person of ordinary creativity, not an automaton." *KSR*, 550 U.S. at 421.

Petitioner asserts that a person of ordinary skill in the art at the time of the '619 patent would have been a person with a working knowledge of physiological monitoring technologies, a Bachelor of Science degree in an academic discipline emphasizing the design of electrical, computer, or software technologies, and training or at least one to two years of related work experience with capture and processing of data or information, including but not limited to physiological monitoring technologies. Pet. 9 (Ex. 1003 ¶¶ 37–38). Petitioner also asserts that "[m]ore education can supplement practical experience and vice versa." *Id.*

Patent Owner contends that

> a POSITA would have had at least a bachelor's degree in electrical engineering, mechanical engineering, biomedical engineering, computer engineering, physics, or a related field, and would have had at least two years of relevant work experience with capture and processing of data or information, including but not limited to physiological information, or equivalents thereof. APPLE-2009, ¶¶23-24. Less work experience may be compensated by a higher level of education and vice versa.

PO Resp. 8–9.

Patent Owner's asserted level of ordinary skill in the art is essentially the same as Petitioner's, for example requiring a bachelor's degree in science or engineering and "at least two years of relevant work experience with capture and processing of data or information, including but not limited to physiological information." *Id.*; Pet. 9. In view of the similarity, our analysis is not affected by choosing one over the other. On the complete record now before us, and as we did in our Institution Decision, we rely on

Petitioner's proposed level of ordinary skill in the art as it is essentially the same as that proposed by Patent Owner. Petitioner's asserted level of ordinary skill in the art is consistent with our review and understanding of the technology and descriptions in the '619 patent and the asserted prior art references. *Okajima* 261 F.3d at 1355 (Fed. Cir. 2001).

C. Claim Construction

We interpret a claim "using the same claim construction standard that would be used to construe the claim in a civil action under 35 U.S.C. 282(b)." 37 C.F.R. § 42.100(b) (2020). Under this standard, we construe the claim "in accordance with the ordinary and customary meaning of such claim as understood by one of ordinary skill in the art and the prosecution history pertaining to the patent." *Id.* Furthermore, "we need only construe terms 'that are in controversy, and only to the extent necessary to resolve the controversy.'" *Nidec Motor Corp. v. Zhongshan Broad Ocean Motor Co.*, 868 F.3d 1013, 1017 (Fed. Cir. 2017) (quoting *Vivid Techs., Inc. v. Am. Sci. & Eng'g, Inc.*, 200 F.3d 795, 803 (Fed. Cir. 1999)).

Petitioner argues that "the phrase 'biometric characteristic' should be construed to mean 'a human characteristic that is so distinctive and measureable [sic] that a particular human individual may be identified.'" Pet. 5 (citing Ex. 1003 ¶ 64). Petitioner contends that this construction comes essentially from the '619 patent's specification. *Id.* at 5–6 (quoting Ex. 1001, 5:9–14).

Patent Owner disagrees with Petitioner's construction and argues that this term does not require construction because it is not necessary to resolve any controversy in this proceeding. PO Resp. 9 (quoting *Wellman, Inc. v. Eastman Chem. Co.*, 642 F.3d 1355, 1361 (Fed. Cir. 2011). Patent Owner

argues, for example, that Petitioner's construction excludes biometric characteristics such as blood pressure and heart rate. *Id.* at 10 (quoting Ex. 1001, 4:51–67). We find Patent Owner's position persuasive.

We acknowledge Petitioner's position that the '619 patent states on one hand that "[a] 'biometric characteristic' or a 'biometric identifier,' as used herein, *may* refer to a human characteristic that is so distinctive and measureable that a particular human individual may be identified." Ex. 1001, 5:9–14 (emphasis added). On the other hand, the '619 patent also explains that "[t]he sensed human physical characteristic may vary widely, but may include fingerprint, palm veins, DNA, heart rate, and blood pressure." Ex. 1001, 4:57–59. And, according to Patent Owner's declarant, Dr. Anthony, heart rate and blood pressure, for instance, are biometric characteristics that do not necessarily "identify" a particular human being. *See* Ex. 2009 ¶ 28 (Dr. Anthony testifying that "[i]n my opinion, 'heart rate' and 'blood pressure' are embodiments of biometric characteristics that . . . are not sufficiently distinctive to enable identification of a particular human individual.").

Considering the written description as a whole, along with Patent Owner's argument and Dr. Anthony's testimony, we agree that "biometric characteristic" does not need a specific construction in this proceeding. We disagree with Petitioner that there is an actual dispute as to this term because, apart from an express construction, Kim discloses a fingerprint sensor. Pet. Reply 2. Regardless, our Decision does not turn on a specific construction of "biometric characteristic." At least Kim discloses a fingerprint sensor which satisfies the biometric characteristic limitation in the challenged claims under either a plain and ordinary meaning of this term or under Petitioner's proposed construction. *See, e.g.*, Ex. 1004, 14:22–24

(Kim explaining that "the home button 460 (or the fingerprint sensor) may be disposed at a lower portion of the electronic device 401.").

D. Ground 1: Claims 1, 5, 9, and 10 — Alleged Anticipation by or, Alternatively, Obviousness over Kim (Ex. 1004)

For the reasons below, and on the complete record before us, Petitioner has shown by a preponderance of the evidence that claims 1–10 are anticipated by or, alternatively, would have been obvious over Kim.

1. Kim (Ex. 1004)

Titled "Electronic Device Having Combined Button," Kim teaches an electronic device such as a mobile phone or tablet including housing 720, a physical button 760a located in an opening of housing 720, and a processor located within housing 720 connected to button 760a. *See* Ex. 1004, code (57). ("[A] processor located inside the housing and electrically coupled to the display and the mechanical button."), 4:19–21. Kim explains that the "combined button" is "implemented as a combination of a physical button and a virtual button." *Id.* at 2:39–41. Kim's Figure 10(b) is reproduced below, as annotated by the Board.

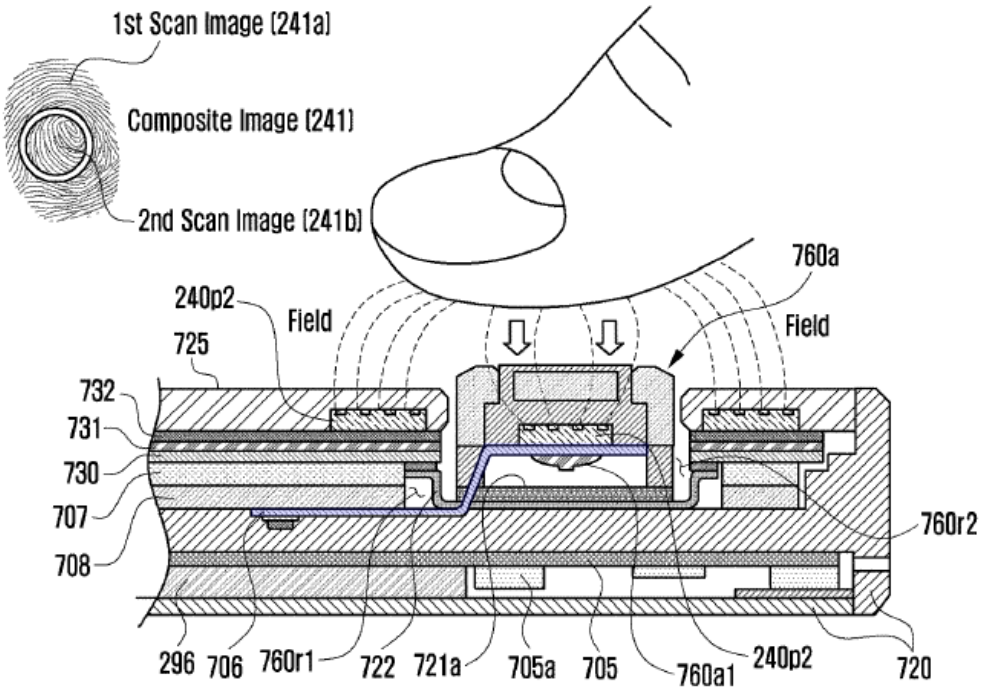

(b)

Annotated Figure 10(b) illustrates physical button 760 and capacitive finger print sensor 240p2 as well as flexible printed circuit board ("PCB") 706 (highlighted in blue) sandwiched between sealing rubber 722 and the housing 720. Kim describes that "[w]hen the fingerprint sensor is the capacitive fingerprint sensor 240p2, the capacitive fingerprint sensor 240p2 may be located inside the physical button 760a and mounted on the flexible PCB 706." *Id.* at 20:62–65.

Kim describes that the combined button can be, for example, a "home button" or "power button." *Id.* at 18:19–21, 19:13–15. In Figure 18, reproduced below, Kim discloses an embodiment of electronic device 701 where "power button 764 which is the combined button may include a physical button 764a and a virtual button 764b." Ex. 1004, 19:15–17.

FIG. 18

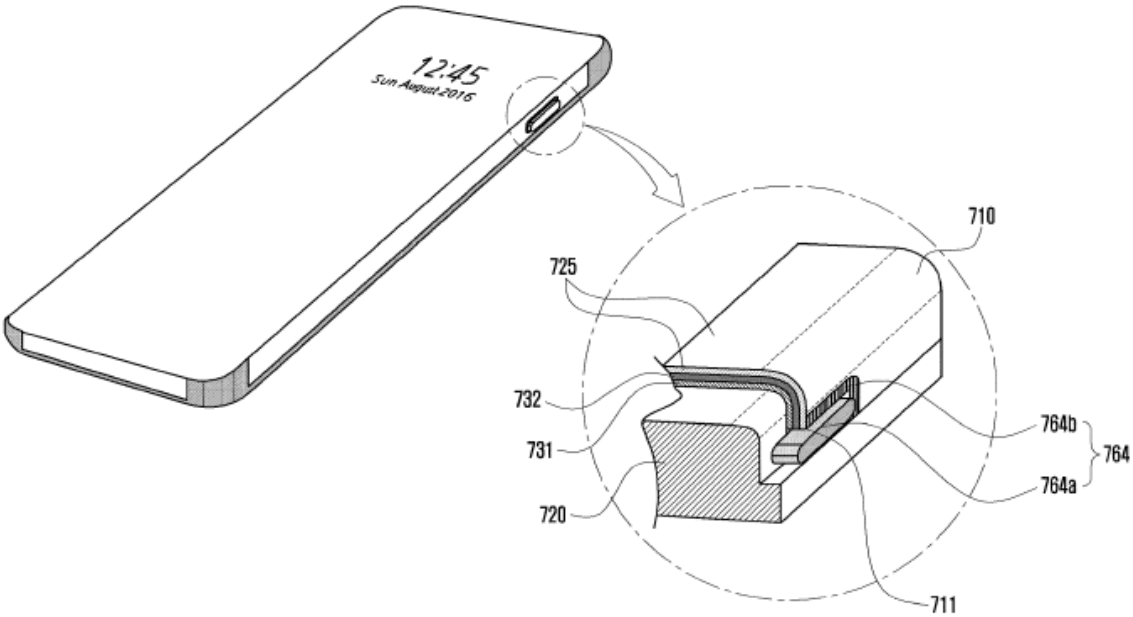

Figure 18 "shows a perspective view of an electronic device and a partially enlarged view of an area of the electronic device including a combined button" located on the lateral or side surface of the electronic device 701. *Id.* at 3:22–24, 17:23–25.

2. Independent claim 1

We initially consider the elements of claim 1. At the outset, we note that Patent Owner does not dispute that Kim discloses many—that is mostly all—the elements of claim 1.[10] What Patent Owner mainly argues with respect to anticipation is that "Kim does not teach *a single embodiment* that satisfies each of the requirements of the ***button assembly*** recited in claim 1" as recited in limitations [1c] and [1d]. PO Resp. 18. As for obviousness,

[10] Patent Owner does argue, for example, that Kim fails to disclose "the ***biometric sensor*** [] ***positioned below the input member***" as recited in limitation [1.cii]. PO Resp. 38 (citing Ex. 2009 ¶ 83).

Patent Owner argues, at least in part, that "a POSITA would not have been motivated to implement the combination, . . . would not have had a reasonable expectation of success in implementing the combination, and [] the combination fails to satisfy the requirement of ***a biometric sensor positioned below the input member."*** *Id.* at 27 (citing Ex. 2009 ¶ 54). We address these arguments in particular, and others, in our analysis that follows.

a) The Parties' Arguments

(1) Preamble — [1pre] An electronic device comprising:

Petitioner argues that "*Kim* teaches that '[a]n electronic device may include a housing, . . . a mechanical button, . . . a processor located inside the housing, . . . and a memory located inside the housing.'" Pet. 11 (quoting Ex. 1004, code (57); Ex. 1022, code (57)).

Patent Owner does not contest Petitioner's arguments that Kim discloses element [1pre]. *See generally* PO Resp.; PO Sur-Reply. Based on the complete record before us, and regardless of whether the preamble is limiting, we find Petitioner's arguments and evidence persuasive that Kim discloses the preamble of claim 1.

(2) Limitation [1a] — an enclosure having an enclosed volume and an opening formed in a sidewall;

Providing an annotated version of Kim's Figure 18, reproduced below, Petitioner argues that "*Kim* discloses an enclosure having an enclosed volume, teaching a 'housing 720' and 'cover glass 725.'" Pet. 12 (citing Ex. 1004, 22:4–27; Ex. 1022 ¶¶ 175–178; Ex. 1003 ¶¶ 103–104).

FIG. 18

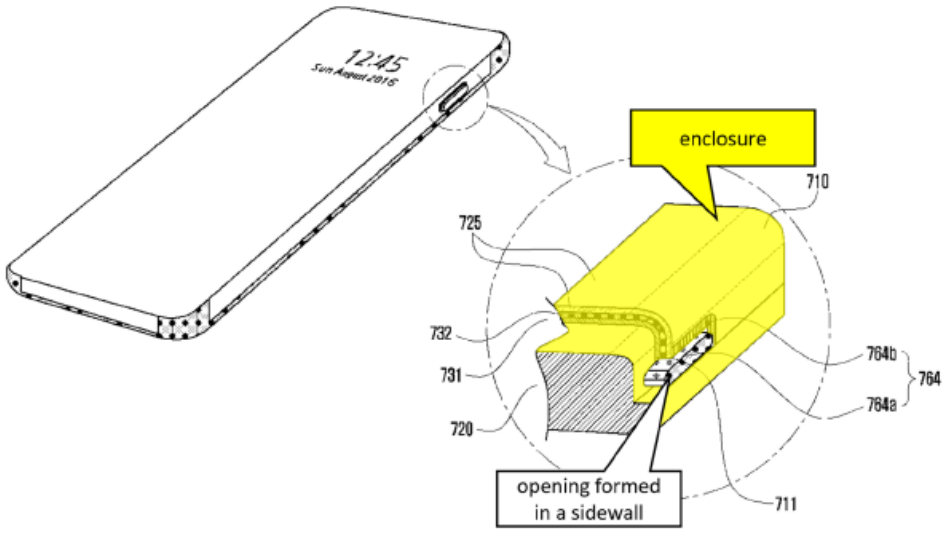

Figure 18 of Kim, as annotated by Petitioner, illustrates a mobile phone having housing or "enclosure," 720 and button 764a positioned in the enclosure's side surface, i.e., sidewall, and an opening formed in the sidewall to accommodate the button.[11]

Patent Owner does not argue that Kim's Figure 18 embodiment fails to disclose an enclosure with an opening formed in a sidewall as recited in claim 1. *See generally* PO Resp.; PO Sur-Reply. Based on the full record, we find Petitioner's arguments and evidence persuasive that Kim's Figure 18 discloses limitation [1a].

[11] We attempt in this Decision to use the term "sidewall" from the claims of the '619 patent and "side surface" as described by Kim, consistent with the papers themselves. However, these terms are, at times, used interchangeably in this Decision.

(3) Limitation [1b] — a processor positioned in the enclosed volume;

Petitioner argues that "*Kim* discloses 'a processor located ***inside*** the housing.'" Pet. 15 (quoting Ex. 1004, 2:7–11; *see also* Ex. 1004, code (57), Figs. 1–3, 1:38–2:38, 5:1–28; Ex. 1022 ¶¶ 5–7, 17–19). Kim illustrates in Figure 1, as annotated by Petitioner and reproduced below, processor 120 within electronic device 101.

FIG. 1

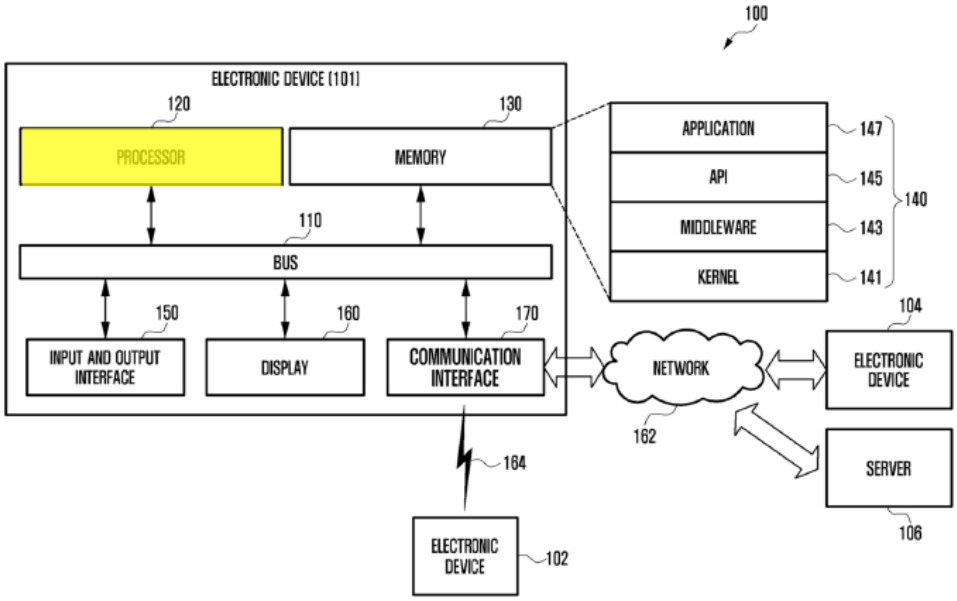

Kim's Figure 1, as annotated by Petitioner, illustrates in diagrammatic form electronic device 101 including, *inter alia*, processor 120 (highlighted in yellow), memory 130, and communication interface 170. Petitioner argues that a person of ordinary skill in the art "would have understood that *Kim's* processor would be in the enclosed volume because the enclosed volume exists to protect it from potentially damaging external stimuli." *Id.* at 15–16 (citing Ex. 1003 ¶¶ 114–115).

Patent Owner does not argue that Kim's Figure 1 fails to disclose a processor within Kim's enclosure. *See generally* PO Resp.; PO Sur-Reply.

Based on the full record, we find Petitioner's arguments and evidence persuasive that Kim discloses limitation [1b].

> *(4) Limitation [1c] — a button assembly within the opening, the button assembly comprising:*
>
> *[1c i] an input member having an input surface; and*
>
> *[1c ii] a biometric sensor positioned below the input member and configured to produce an output signal in response to a touch on the input surface, the output signal corresponding to a biometric characteristic;*

For limitations [1c], [1c i], and [1c ii] Petitioner points initially to Kim's Figure 10(b) illustrating a person's finger in close proximity to physical button, i.e., input member 760a incorporating biometric sensor 240p2. Figure 10(b) as annotated by Petitioner is reproduced below.

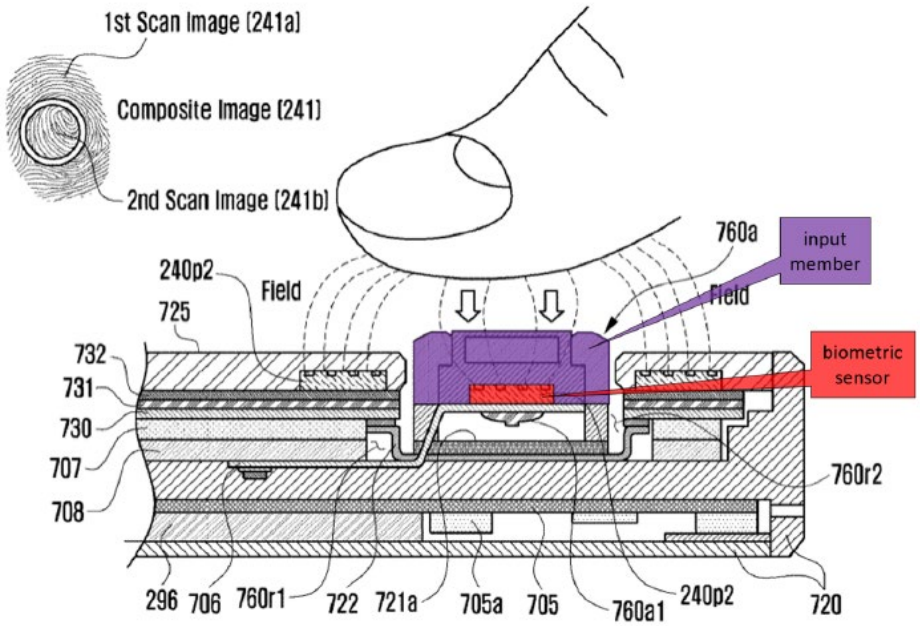

Annotated Figure 10(b) illustrates in cross section capacitive fingerprint sensor 240p2 located inside and below physical button 760a and an input surface on the top of the button where a user's finger is applied. *Id.* at

20:62–65. Capacitive fingerprint sensor 240p2 is additionally located in a region of the enclosure surrounding physical button 760a.

Petitioner's declarant, Dr. Berger, testifies that

> Kim discloses "a button assembly within the opening, the button assembly comprising: . . . a biometric sensor . . . configured to produce an output signal in response to a touch on the input surface, the output signal corresponding to a biometric characteristic" the same way as the '619 patent's specification.

Ex. 1003 ¶ 125 (quoting Ex. 1001, 4:51–5:14). Relying on Dr. Berger's testimony, Petitioner argues that a person of ordinary skill in the art "would have been familiar with biometric sensors (*e.g.*, fingerprint sensors), and would have understood that the 'output signal' from a fingerprint sensor would correspond to a biometric characteristic (*e.g.*, a fingerprint)." Pet. 20 (citing Ex. 1003 ¶¶ 128–129).

Petitioner further argues that annotated Figure 18 shows an embodiment with "a combined button," for example, power button 764 specifically positioned in the sidewall, i.e., lateral surface of a phone, that also satisfies limitation [1c i]. *Id.* at 18 (citing Ex. 1004, 21:20–22; Ex. 1022 ¶ 166). With respect to limitation [1c ii] Petitioner argues that physical button 760a shown in Figure 10 "discloses that the 'combined button' includes a fingerprint sensor below the input member. *Id.* at 19 (citing Ex. 1003 ¶ 123).

Patent Owner argues that Petitioner's "anticipation challenge fails as a matter of law because it combines two distinct embodiments, e.g., Kim's Figure 10 and Figure 18 embodiments." PO Resp. 18–19. According to Patent Owner, "[Petitioner]'s anticipation theory based on Kim requires each of the Figure 10 and Figure 18 embodiments, because neither embodiment—alone—satisfies every requirement of the ***button assembly***." *Id.* at 19.

Patent Owner argues that the proper anticipation analysis "demands that an asserted prior art reference 'clearly and unequivocally' direct 'those skilled in the art to the [invention] without any need for picking, choosing, and combining various disclosures not directly related to each other by the teachings of the cited reference.'" *Id.* at 20 (quoting *In re Arkley*, 455 F.2d 586, 587 (C.C.P.A. 1972)). Patent Owner disputes that Kim discloses "the ***biometric sensor*** [] ***positioned below the input member***" as recited in limitation [1.cii], asserting that Petitioner's "mapping [] would have rendered the Figure 10 embodiment unable to generate a fingerprint image, as described in Kim." *Id.* at 38 (citing Ex. 2009 ¶ 83).

With respect to obviousness, Patent Owner further argues that a person of ordinary skill in the art would neither have been motivated to combine the embodiments of Figures 10(b) and 18 nor "have had a reasonable expectation of success in implementing it." *Id.* at 20 (citing Ex. 2006, Abstract; Ex. 2007, Abstract, 1:14–37, 74–76; Ex. 2009 ¶¶ 60–66).

We address the parties' anticipation and obviousness arguments in detail in our analysis section below.

(5) Limitation [1d] — a seal positioned between a sealing surface of the button assembly and the enclosure;

Petitioner argues that "*Kim* discloses use of 'sealing rubber 722' . . . which creates the claimed 'seal.'" Pet. 21 (citing Ex. 1004, 20:27–50, 22:28–42; Ex. 1022 ¶¶ 156–159, 179–181). To demonstrate what Petitioner refers to as the claimed "seal," we reproduce below Petitioner's annotated version of Kim's Figure 10(b).

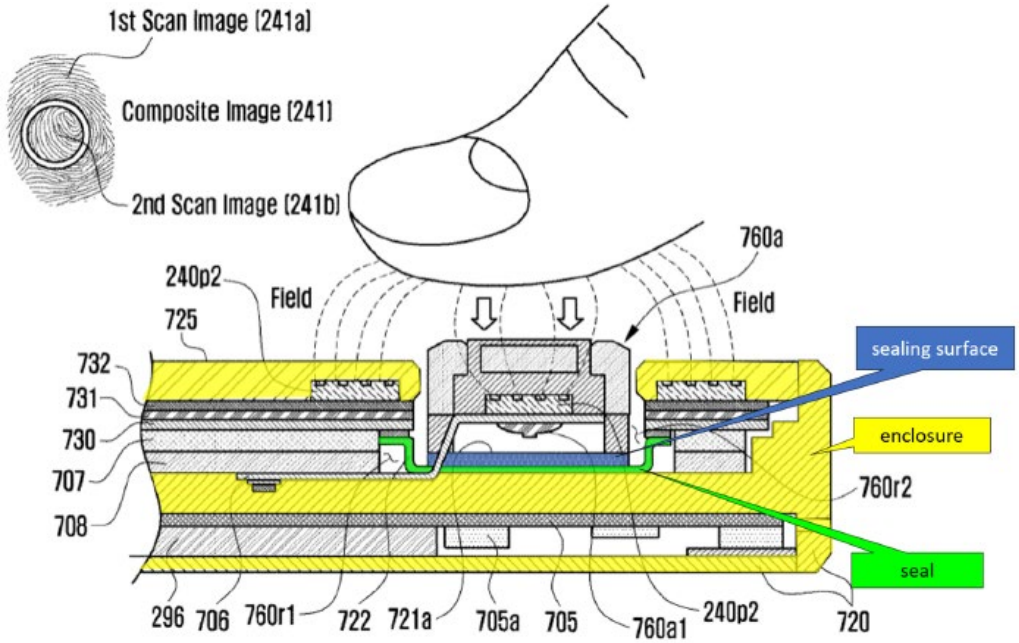

Petitioner asserts that "Figure 10(b) (above) discloses that 'sealing rubber 722' (green) is positioned between a sealing surface of the button assembly (blue) and the enclosure (yellow)." *Id.* at 22 (citing Ex. 1003 ¶ 132).

Patent Owner does not substantively dispute that Kim's Figure 10(b) discloses a seal between a sealing surface of the button and the enclosure. *See generally* PO Resp.; PO Sur-Reply. Based on the full record, we find Petitioner's arguments and evidence persuasive that Kim discloses limitation [1d].

(6) Limitation [1e] — a flexible conduit coupled to the biometric sensor and configured to transmit the output signal to the processor;

Petitioner argues that Kim "discloses that '***flexible PCB 706 may be electrically connected to the capacitive fingerprint sensor 240p2*** embedded in the physical button 760a.'" Pet. 23 (quoting Ex. 1004, 22:10–12). With regards to the biometric signal transmitted to a processor, Petitioner offers the following annotated version of Kim's Figure 2 below.

FIG. 2

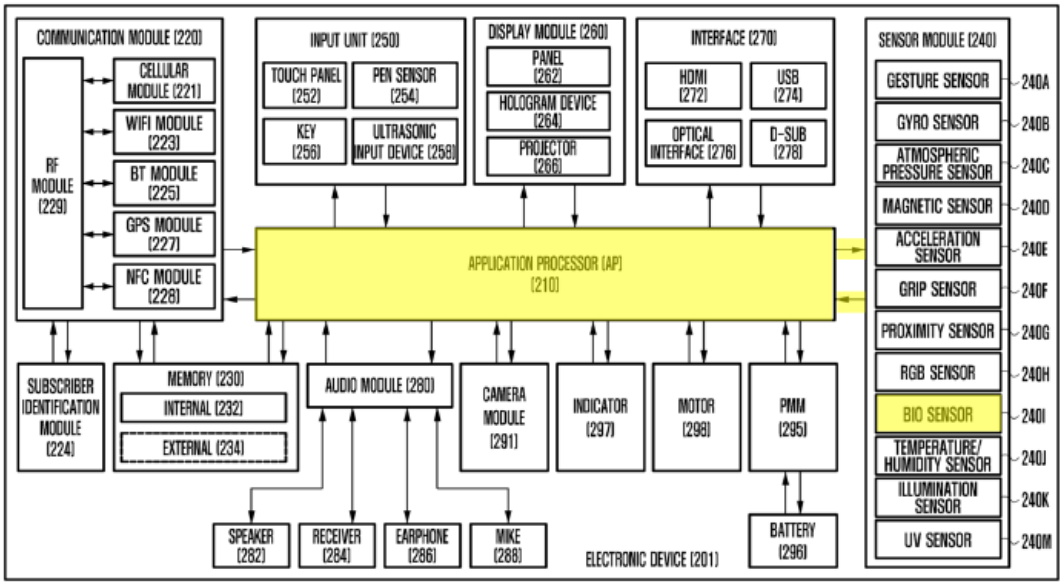

Consistent with the other figures and embodiments described by Kim, Figure 2 as annotated by Petitioner, illustrates in a block diagram data transmission and communication between bio sensor 240 and processor 210 in electronic device 201.

Patent Owner does not argue that Kim fails to disclose a flexible conduit coupled to the biometric sensor. *See generally* PO Resp.; PO Sur-Reply. Based on the full record, we find Petitioner's arguments and evidence persuasive that Kim discloses limitation [1e].

> *(7) Limitation [1f] — a portion of the flexible conduit is sandwiched between the seal and the sealing surface or between the seal and the enclosure.*

Considering Petitioner's annotated version of Kim's Figure 10(b), below, Petitioner argues that "Figure 10(b) discloses a portion of the flexible conduit (*i.e.*, *Kim*'s 'flexible PCB 706,' teal) sandwiched between the seal (*i.e.*, *Kim*'s 'sealing rubber 722,' green) and the enclosure (*i.e.*, *Kim*'s

'housing 720' and 'cover glass 725,' yellow)." Pet. 26 (citing Ex. 1003 ¶ 142).

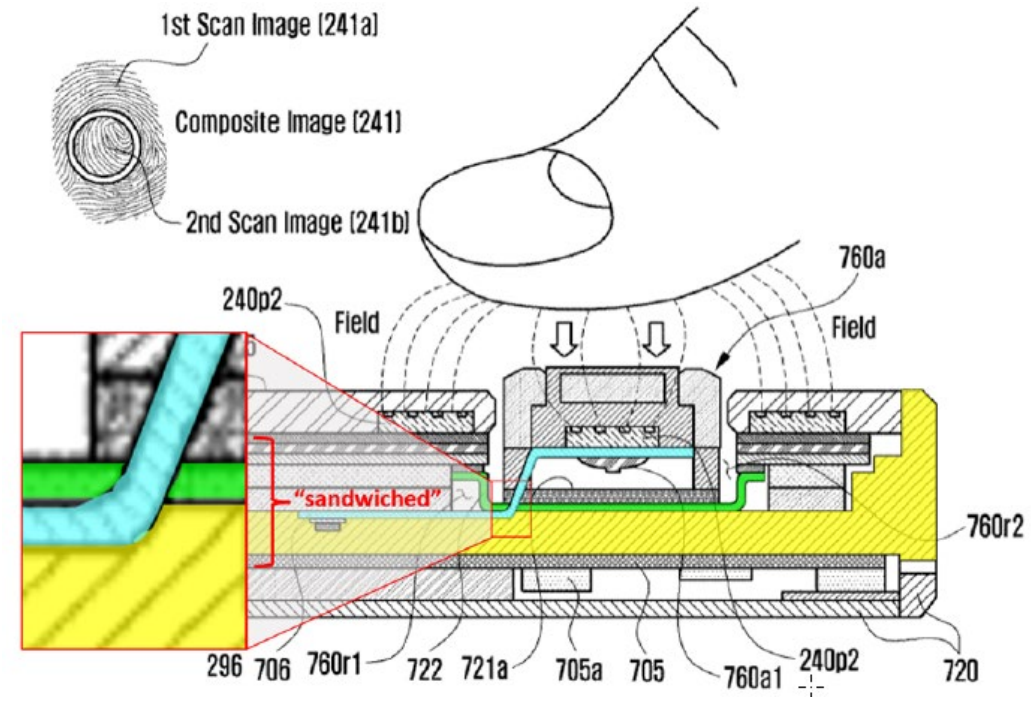

Kim's Figure 10(b), as annotated by Petitioner, illustrates in cross section a portion of Kim's flexible PCB as layered between the device housing (highlighted in yellow) and seal (highlighted in green).

Patent Owner does not argue that Kim's Figure 10(b) fails to disclose that the flexible conduit is sandwiched between the seal and the sealing surface or between the seal and the enclosure.[12] *See generally* PO Resp.; PO Sur-Reply.

[12] Patent Owner does allege with respect to limitation [1f] that "the Kim Combination is the product of hindsight, e.g., to satisfy the requirements of ***sandwiched*** arrangement recited in limitation [1.f] for the ***button assembly***. PO Resp. 27 (citing Ex. 2009 ¶ 54). We address Patent Owner's hindsight argument in our obviousness analysis below.

b) Anticipation by Kim — Analysis of the Parties' Arguments and Evidence

Patent Owner's primary contention is that Petitioner's anticipation analysis improperly combines elements from the different embodiments shown in Kim's Figures 10 and 18 as meeting the limitations of the claimed "button assembly" in claim 1. *See* PO Resp. 18–19 (Patent Owner arguing that "Kim does not teach a single embodiment that satisfies each of the requirements of the ***button assembly*** recited in claim 1."). Petitioner cites two Federal Circuit cases in particular, *Net MoneyIN v. Verisign*, 545 F.3d 1359 (Fed. Cir. 2008) and *In re Arkley*, 455 F.2d 586, 587 (C.C.P.A. 1972).

Additionally, we keep in mind that anticipation is assessed from the perspective of a person of ordinarily skill in the art. *Dayco Prods., Inc. v. Total Containment, Inc.*, 329 F.3d 1358, 1368 (Fed. Cir. 2003) ("'[T]he dispositive question regarding anticipation [i]s whether one skilled in the art would reasonably understand or infer from the [prior art reference's] teaching' that every claim element was disclosed in that single reference." (quoting *In re Baxter Travenol Labs.*, 952 F.2d 388, 390 (Fed. Cir. 1991))). Thus, a relevant issue presented here is whether a person of ordinary skill in the art would reasonably understand or infer by reading Kim's disclosure that the "combined button" embodiment in Figure 10(b) could be implemented on the side of an electronic device as disclosed in Figure 18.

We consider the *Net MoneyIN* and *Arkley* cases asserted by Patent Owner before delving into the specific facts of this case.

(1) Relevant Case Law and Legal Standards for Anticipation for Different Embodiments

Net MoneyIN is relied on by Patent Owner because it explains for anticipation that "it is not enough that the prior art reference discloses part of

the claimed invention, which an ordinary artisan might supplement to make the whole, or that it includes multiple, distinct teachings that the artisan might somehow combine to achieve the claimed invention." *Net Moneyin*, 545 F.3d at 1371. Patent Owner contends that the embodiments in Kim's Figures 10(b) and 18 are "distinct embodiments" and thus cannot be combined. PO Resp. 18–19. According to Patent Owner, it is improper to consider the combined button placement in the sidewall as shown in Figure 18 together with the structure of the combined button positioned on the front face of the phone as shown for example in Figures 10a–*b*. *Id.* Patent Owner also cites *Arkley* which explains that to anticipate, the prior art "reference must clearly and unequivocally disclose the claimed compound or direct those skilled in the art to the compound without *any* need for picking, choosing, and combining various disclosures not directly related to each other by the teachings of the cited reference." *In re Arkley*, 455 F.2d at 587.

In *Arkley*, the Court of Customs and Patent Appeals reversed the Board and determined that the appellants claimed cephalosporin C_A-type compound for an antibiotic was not anticipated by two examples in the prior art of "exact precursors" of appellants' compound. *Id.* at 588. The Court explained that these exact precursors, cephalosporin C-type compounds, were relevant "only to the extent that appellants have discovered that cephaloridine will be formed *if* the acid [disclosed in example 10] is first selected and *then* carefully reacted with a particular tertiary amine *which also must be selected."* *Id*. The Court further explained that "there is nothing in the teachings relied upon by the Patent Office which 'clearly and unequivocally' directs those skilled in the art to make this selection nor any indication that Flynn ever made the selection himself." *Id.* Overall, the Court found that the different examples in the anticipating reference

provided insufficient disclosure and teachings for a skilled artisan to recognize that a "particular tertiary amine," namely pyridine, was effective in converting cephalosporin C-type precursers into compounds of the cephalosporin C_A-type compound, as claimed by appellants. *See id.* at 589 (The Court explaining that "[w]e do not read into references things that are not there.").

In *Net MoneyIN*, the Federal Circuit explained that the anticipating reference must disclose "all of the limitations arranged or combined in the same way as recited in the claim," otherwise, "it cannot be said to prove prior invention of the thing claimed and, thus, cannot anticipate under 35 U.S.C. § 102." *Net MoneyIN, Inc.*, 545 F.3d at 1371. The Court provided some helpful discussion and examples of prior art that was insufficient for purposes of anticipation:

> The meaning of the expression "arranged as in the claim" is readily understood in relation to claims drawn to things such as ingredients mixed in some claimed order. In such instances, a reference that discloses all of the claimed ingredients, but not in the order claimed, would not anticipate, because the reference would be missing any disclosure of the limitations of the claimed invention "arranged as in the claim."

Net MoneyIN, 545 F.3d at 1370. In one example, the Court explained that a reference describing a hydraulic scrap shearing machine failed to anticipate because "[a]lthough the prior art reference could be said to contain all of the elements of the claimed invention, it did not anticipate under 35 U.S.C. § 102 because it 'disclose[d] an entirely different device, composed of parts distinct from those of the claimed invention, and operating in a different way to process different material differently.'" *Id.*

In another example, the Court reversed a district court determination of anticipation involving prior art that contained a figure and accompanying

text disclosing the use of hydrogen with a mixed bed to deoxygenate water, and a separate passage discussing deoxygenating water with, among other things, hydrazine. *Id.* The Federal Circuit explained that "the reference could not anticipate the claimed invention because there was no link between that figure and the general discussion of hydrazine as a deoxygenating agent." *Id.* The Court "concluded that although the reference taught all elements of the claim, it did not contain a discussion suggesting or linking hydrazine with the mixed bed in the figure, and thus did not show the invention arranged as in the claim." *Id.*

What these cases and examples clearly articulate is that whether there is sufficient description in an anticipation reference for linking different disclosures, elements, and embodiments, is particularly case and fact dependent. Moreover, a finding of anticipation resting upon a reference's disclosures of elements in different embodiments turns on whether an ordinarily skilled artisan would understand that the reference suggests arranging the elements of the embodiments to one another in the same way as the challenged claims..

For the reasons that follow, we determine that there is sufficient description and teaching in Kim such a person of ordinary skill in the art would have understood that the "combined button" disclosed by Kim, for example in Figure 10(b), can be the same "combined button" as discussed in the embodiment of Figure 18.

Patent Owner argues that Kim describes Figure 10(b) as a "cross-sectional view of ***a*** combined button of an electronic device **according to still another embodiment**"—not the embodiment of Figure 18." PO Resp. 19 (quoting Ex. 1004, 3:2–3). But this emphasis on the ubiquitous language in Kim's specification of "one embodiment" and "another embodiment" is

superficial. Interpreting "one embodiment" and "another embodiment," as entirely distinct embodiments misreads the written description which, in context, explains the actual relationship between embodiments. For example, for Figure 6 Kim describes minor differences as separate embodiments:

> According to one embodiment, the camera module 640 may be disposed to be exposed through the center of an upper portion of the cover glass 620.
>
> According to one embodiment, the camera module 640 may be disposed as close as possible to the outermost of the front surface.

Ex. 1004, 16:24–29. By way of another example, Kim explains as to Figure 4 that "[a]ccording to *another embodiment*, the display 410 may be extended to a lateral surface of the electronic device 401. According to *still another embodiment*, the display 410 may be formed on only a part of the front surface of the electronic device 401." *Id.* at 14:5–9 (emphases added). "Another embodiment" can simply mean that there is a related alternative, or minor deviation in the arrangement, positioning, or function of a feature compared to another embodiment. Or, it could be that there are, in fact, significant, material differences between the embodiments. In other words, how distinct, "different embodiments" are in a reference, is contextual, certainly requiring a deeper analysis and consideration beyond Kim's use of "another embodiment" when discussing its button assembly.

Considering the different embodiments and the relationships between them as described in Kim, we turn first to the question of the "combined button" raised by Patent Owner. *See* PO Resp. 21 (Patent Owner arguing that "[t]his description does not equate the term [combined button] to a button assembly with specific components (e.g., fingerprint sensor) with a

specific positioning configuration within an electronic device (e.g., in an opening formed on a lateral surface)).

It is clear from a plain reading of Kim, as well as the figures, that the combined button is a combination of a physical button and a virtual button and is described with respect to most if not all the embodiments and Figures in Kim. *See, e.g.*, Ex. 1004, code (54), 1:1–2, 1:15, 2:30–33, 13:54–56, 13:61–64. For example, Kim describes with respect "to FIG. 10(a), a circular home button 760 including a physical button 760a and a virtual button 760b may be implemented as an example of the combined button." *Id.* at 21:23–25. Kim's Figures 10(a)-(b) are reproduced below.

FIG. 10

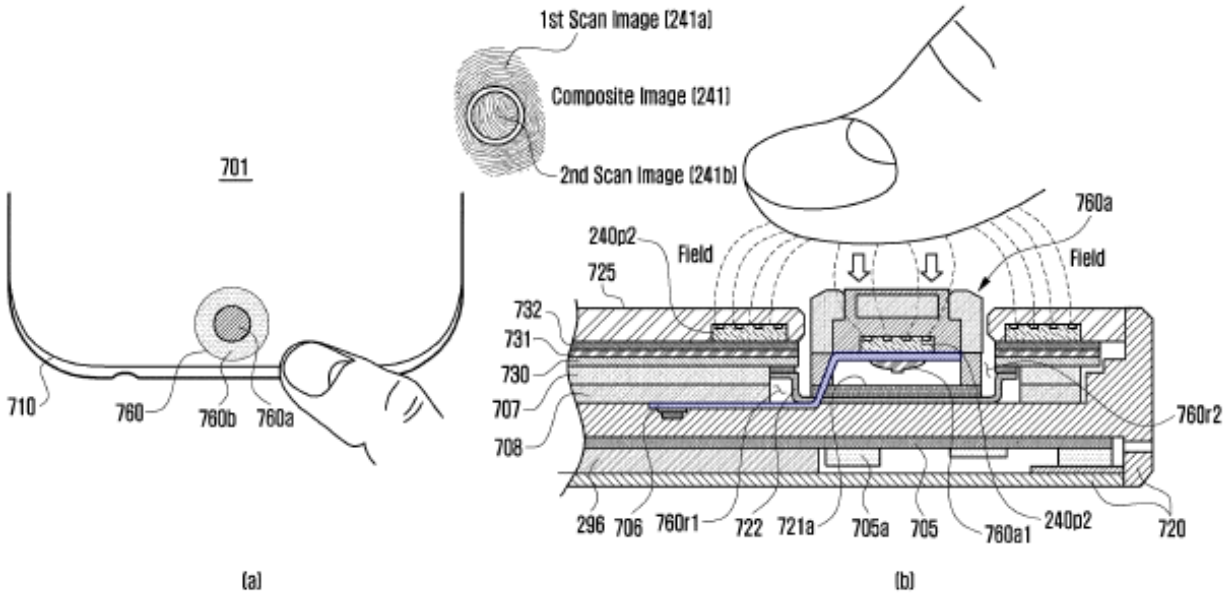

Figures 10(a)-(b) illustrate physical button 760a and virtual button 760b positioned on the front face of an electronic device, (Fig. 10(a)), and a cross-section of physical button 760a and virtual button 760b, (Fig. 10(b)).

Figures 8(a)–(b), reproduced below, illustrate another embodiment of the combined button. Ex. 1004, 19:31–33.

FIG. 8

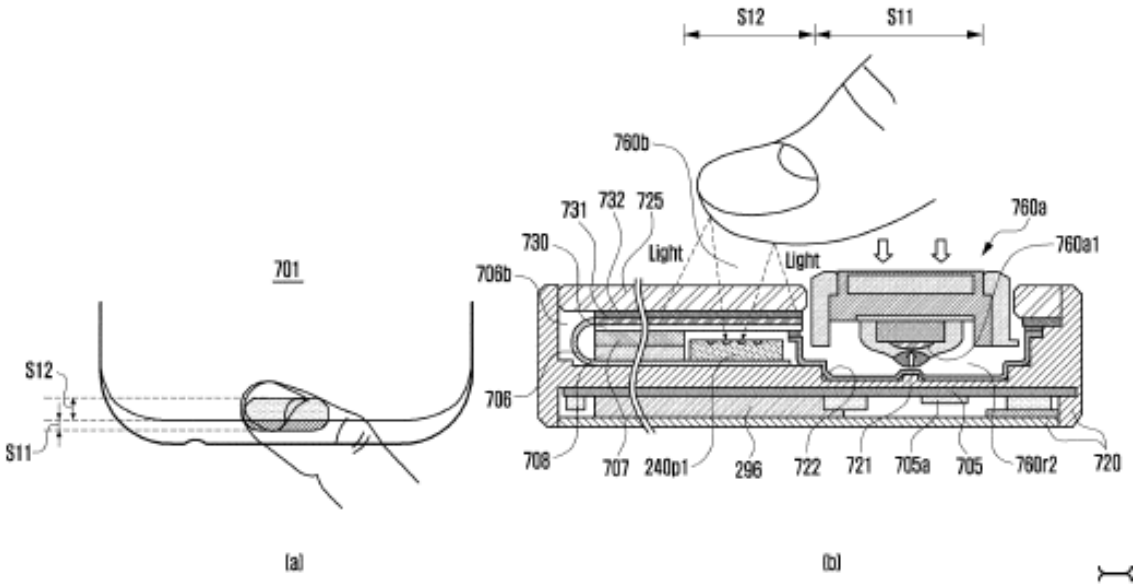

Kim describes with respect to Figures 8(a)–(b) that "an optical fingerprint sensor 240*p*l[] positioned under the virtual button 760*b* of the home button 760 can detect a user fingerprint contacted (or non-contacted) on a cover glass 725. There may be a gap between the physical button 760*a* and the virtual button 760b." *Id.* at 19:48–53.

Kim explains that the various embodiments of the physical and virtual "combined button" can be structurally and, perhaps, functionally different in certain respects, but we disagree that they are entirely distinct. For example, the physical button 760*a* in the embodiment of Figures 8(a)–(b) shown above, has a dome switch 760*a*1 which, when pushed down, contacts tact point 721. The embodiment shown in Figure 10(b) does not have a tact point, instead "[t]he dome switch 760*a*1 of the physical button 760*a* may move downward by a user's click (or selection) and then come in contact

with a support fixture 721*a* located on the sealing rubber 722." *Id.* at 22:31–33.

As for the embodiment in Figure 18, Kim describes that "[t]he power button 764 which is the combined button may include a physical button 764a and a virtual button 764b." *Id.* at 19:15–17. Kim's Figure 18 is reproduced below.

FIG. 18

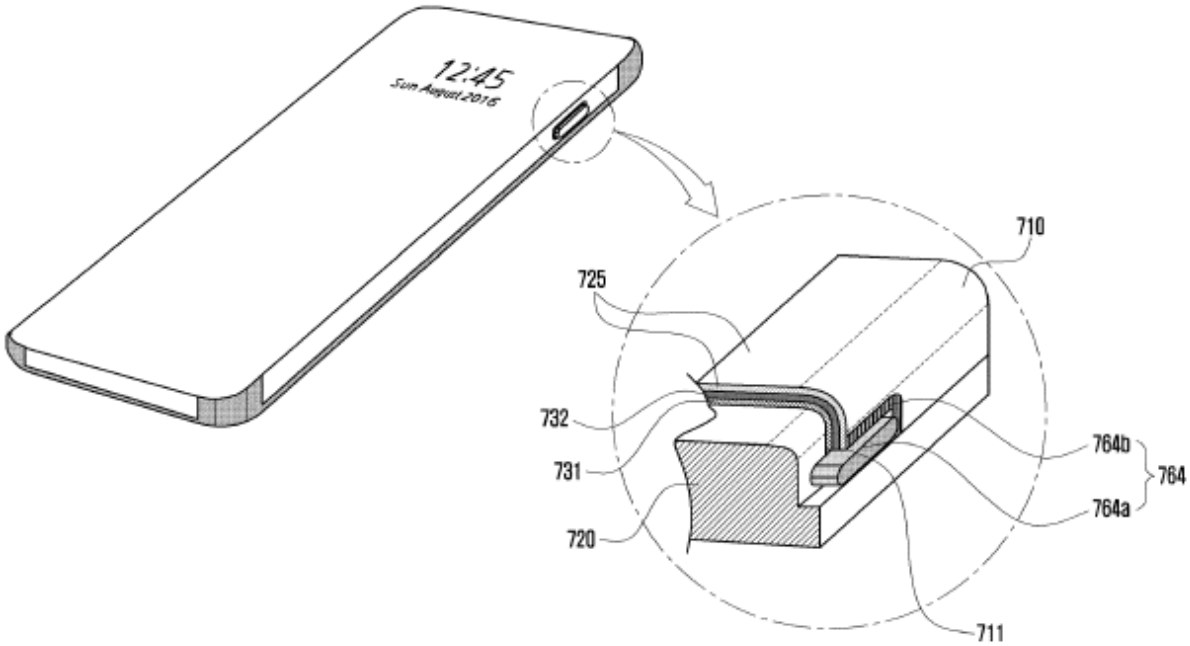

Figure 18 illustrates "the combined button located on the lateral surface of the electronic device 701." *Id.* at 19:13–14.

Indeed, Kim states that "FIGS. 7 and 18 *show examples* of the combined button located on the front surface *or the side surface* of the electronic device 701." *Id.* at 17:23–25 (emphases added). In Figures 7(a)–(d), the combined button is located on the front of the device. Kim's written description of Figure 18 showing the combined button on the lateral or side surface of the device immediately follows the discussion of the embodiment

in Figures 7(a)–(d), and immediately precedes the discussion of the embodiments in Figures 8, 9, and 10. *Id.* at 19:13–29. The Figure 18 discussion thus reads as inter-related to these embodiments. The discussion is not long or detailed as to the actual physical structure of a particular "combined button" but identifies generally the "combined button." *Id.* Kim does explain for Figure 18 that "the combined button located on the lateral surface of the electronic device 701 may be implemented as a power button 764 (or a power/hold button)." *Id.* at 19:13–15. And, as in the other embodiments, Kim describes that "the combined button may include a physical button 764a and a virtual button 764b." *Id.* at 19:15–17.

In context, reading Kim's written description and considering as a whole the disclosed embodiments of the "combined button," a person of ordinary skill in the art can understand that the embodiment in Figure 18 is simply showing that the various disclosed embodiments of the "combined button" could be implemented not just on the front of the device, but also on the lateral surface, i.e., a sidewall of the device. The combined button is described consistently throughout Kim as including a physical button surrounded by a virtual button. *Compare, e.g.*, *id.* at 21:23–26 (Kim describing for "FIG. 10(a), a circular home button 760 including a physical button *760a* and a virtual button *760b* may be implemented as an example of the combined button 25 in the display 710"), *with id.* at 19:21–23 (For Figure 18 Kim describing that "the physical button 764*a* may be located in the display 710, and the virtual button 764*b* may surround the physical button 764*a*."). Indeed, Kim's Figure 6 illustrates a combined button on the front face of a device, and alternatively, expressly describes "a power button (not shown) *located on the lateral surface* of the electronic device 600 may also be the combined button." *Id.* at 17:30–32 (emphasis added). *See In re*

Arkley, 455 F.2d at 588 (The Court explaining the necessity that the anticipating prior art "'clearly and unequivocally' directs those skilled in the art to make this selection.").

Considering all the arguments and evidence in this case and a plain reading of Kim, there is a recognizable contextual link between these various embodiments that a person of ordinary skill in the art would understand to describe the implementation of the "combined button" on the lateral or side surface of an electronic device, such as a mobile phone as illustrated in Figure 18. Dr. Berger confirmed this during his deposition. When questioned about Kim's embodiments illustrating the "combined button" shown on the front face of the device, Dr. Berger responded "[b]ut, in Figure 18, it clearly shows it on the side. And Kim makes clear that the same button could be, could be in other locations than the front." Ex. 2004, 68:2–5. We find Dr. Berger's testimony persuasive and consistent with a plain reading of Kim's disclosures, regardless of Kim's various combined button embodiments. *See* Ex. 1004 17:23–25 (Kim explaining that "FIGS. 7 and 18 show examples of the combined button located on the front surface or the side surface of the electronic device 701.").

We determine that a person of ordinary skill in the art reading the explanations for Figure 18 would understand that a combined button can be arranged in Kim on the front of the device as shown in the various embodiments, and in a sidewall as shown in the Figure 18 embodiment which is the same arrangement as recited in the challenged claims. *Net MoneyIN*, 545 F.3d at 1371 (The Court explaining "the importance of the requirement that the reference describes not only the elements of the claimed invention, but also that it describe those elements 'arranged as in the claim.'").

We address below Patent Owner's additional arguments with respect to Kim's combined button disclosure, arguments which are not consistent with the facts and evidence in this case.

(2) Whether the Petition Identifies a Teaching in Kim to Combine the Figure 10(b) and Figure 18 embodiments

Patent Owner argues that the Petition itself does not identify any suggestion in Kim to combine the teachings relating to the combined buttons shown in Figures 10 and 18. PO Resp. 20 (citing Ex. 2009 ¶¶ 60–66). We disagree. We acknowledge that Kim does not explicitly state that the embodiments of Figures 10 and 18 are combinable. However, as we discussed above, the suggestion to use the combined button of Figure 10 in the location shown in Figure 18 is evident to a person of ordinary skill in the art given a plain reading of the written description. The Petition explicitly points to Kim's Figure 18 showing a combined button in the side wall of the device, and cites Kim's express suggestion to relocate the button shown on the front of the device in Figure 6 to "the ***lateral*** [*i.e.*, side] ***surface*** of the electronic device 600." Pet. 14 (quoting Ex. 1004, 17:10–12). Petitioner also relies on Dr. Berger, who testifies that "a person of ordinary skill in the art would have been familiar with electronic devices with sealed and/or insulated button assemblies, and would understand that those assemblies were not limited to the front face of a device." Pet. 14 (citing Ex. 1003 ¶ 110 (referring to prior testimony (*id.* ¶ 47) that "*Polany* discloses 'a personal portable audio device' with buttons (1315-1318) along the sidewall of the device" and citing Ex. 1013, 4:40, 19:42–20:4, Figs. 13B, 17, 19A, 19B)). Petitioner therefore identified not only how Kim suggested that aspects of

the buttons shown in Figures 10 and 18 could be combined, but also that a person of ordinary skill in the art would have known to combine them.

(3) Whether the term "combined button" discussed in Figures 10 and 18 contemplates the combined teachings of the embodiments

Patent Owner argues that Kim's description of "the 'combined button' as a button 'implemented as a combination of a physical button and a virtual button' . . . does not equate the term to a button assembly with specific components (e.g., fingerprint sensor) with a specific positioning configuration within an electronic device (e.g., in an opening formed on a lateral surface)." PO Resp. 21. Patent Owner's declarant, Dr. Anthony, testifies that "Kim's Figure 6 embodiment, for example, includes an example of the "combined button" without a fingerprint sensor. Ex. 2009 ¶ 42 (citing Ex. 1004, 16:48–54 (identifying "button 660" as the "combined button")).

Patent Owner's argument is unavailing for several reasons. For one thing, Kim's Figure 6 embodiment optionally includes a fingerprint sensor. *See* Ex. 1004, 16:48–17: 5 ("The home button 660, i.e., the combined button, may be formed of a physical button 660*a* in part and a soft or virtual button 660*b* . . . [w]hen a part of the home button 660 is the soft button 660*b*, a fingerprint sensor may be disposed under the home button 660.").

For another thing, the embodiment of Figure 18 does not exclude any of the other structural embodiments of the "combined button." In other words, the embodiment of Figure 18 does not specify any particular detailed structure for a "combined button" implemented in the sidewall of a device. *See* Ex. 1004, 19:13–30. As Dr. Anthony testifies, each of the embodiments of the "combined button" can have different structures and functions. Ex.

2009 ¶ 42. However, the fact that Figure 18 *does not* recite specific structure is important because it suggests that all of Kim's "combined button" embodiments, for example those shown in Figures 6, 7, and 8, and including Figure 10, can be implemented on the sidewall of the device.

Moreover, Petitioner's declarant, Dr. Berger, provides unrebutted testimony that "[p]rior to the '619 patent's earliest alleged priority date of June 19, 2017, a person of ordinary skill in the art would have known that a mobile electronic device could include one or more button assemblies in a sidewall." Ex. 1003 ¶ 47 (citing Ex. 1013 4:40, 19:42–20:4, Figs. 13B, 17, 19A, 19B). Dr. Berger testifies that "a person of ordinary skill in the art would understand that a sealed and/or insulated button assembly from one location on a device can be constructed equally on a rear or sidewall of the device, as taught by at least *Polany* (Ex-1013)." *Id.* ¶ 110.

We acknowledge that Patent Owner's declarant, Dr. Anthony, testifies that

> a POSITA would have understood that button 760 shown in Figure 10(b) cannot simply be taken and used as the button 764 in Figure 18. The buttons have different shapes and sizes, and the surface area of the device at the front (Figure 10(b)) and lateral (Figure 18) surfaces of the device is significantly different.

Ex. 2009 ¶ 57. However, Dr. Anthony does not provide any testimony or evidence that changing the shape of the button or that the reduced surface area on the side wall would be technically unfeasible or even difficult, for a person of ordinary skill in the art to implement any one of Kim's combined button embodiments in the sidewall of the electronic device. Here, Dr. Anthony's testimony that for the sidewall location the shape and surface area of the combined button "is significantly different" does not undercut Dr.

Berger's testimony as to the background knowledge and skill of a person or ordinary skill in the art. *Id.*

Dr. Anthony testifies further that "[t]he arrangement of enclosure 720 at each button is significantly different with the enclosure 720 in Figure 18 extending to a location adjacent the lower side of the button 764, whereas the enclosure 720 in Figure 10(b) is oriented below and spaced apart from the button 760." *Id.* ¶ 58. We appreciate that in Figure 18 the combined button is now located on the edge of the cover glass 725 as opposed to being completely surrounded by the cover glass 725 as shown in Figure 10(b). *Compare* Ex. 1004, Fig. 18 *with id.*, Fig. 10(b). Because of this difference, according to Patent Owner, other structures would also be different, for instance "[t]he recesses 760*r*1 and 760*r*2 separated by the sealing rubber 722 are missing in Figure 18 and could not be formed in the same way as in Figure 10(b) given the different orientations of the components at the different locations." Ex. 2009 ¶ 58. However what Dr. Anthony's testimony *does not* address is important. Dr. Anthony does not address whether relocating the combined button would have been difficult, only that the structure of the button would be different. *Id.* Dr. Anthony summarizes his testimony on this point, explaining that "[a]s such, modifications would be needed in terms of the size and shape of the components of the button assembly, how you seal the button, and how you route electrical connections to the button." *Id.* ¶ 59.

We credit Petitioner's declarant, Dr. Berger, in this case. Dr. Berger testifies that "a person of ordinary skill in the art would understand that a sealed and/or insulated button assembly from one location on a device can be constructed equally on a rear or sidewall of the device, as taught by at least *Polany* (Ex-1013)." *Id.* ¶ 110 (citing U.S. Patent No. 7,535,799 to

Polany). Reviewing various prior art electronic devices, Dr. Berger testifies further that "[p]rior to the '619 patent's earliest alleged priority date of June 19, 2017, a person of ordinary skill in the art would also have known that button assemblies in mobile electronic devices should be sealed in order to prevent ingress of potentially damaging moisture and dust." *Id.* ¶ 48. Dr. Berger points to U.S. Patent No. 10,133,910 to Chang, explaining that "*Chang* discloses that 'as users' needs for portable terminals have been gradually diversified, a [home] key [button] used in the portable terminals includes a waterproof structure in order to prevent a fluid from infiltrating into the interior of the portable terminals.'" *Id.* (quoting Ex. 1015, 1:32–35). Dr. Berger maintains that sealing and attaching buttons to an electronic device was a common technique, testifying that

> *Polany* discloses that "[o]ne skilled the art would recognize many different methods of fastening a control feature into the housing, such as, but not limited to, screw, bolts, snap fit components, adhesives, press fits, co-molded components, overmolded components, ultrasonically welded components, rotational fits, wedge fits, and other manufacturing means of effecting the assembly of components"

Id. ¶ 52 (quoting Ex. 1013, 21:5–11, 21:31–37). The fact that there would be certain design and structural differences between a combined button on the face of the electronic device, and a combined button on the side wall of the electronic device does not undermine Dr. Berger's testimony that a person of ordinary skill in the art would have understood how to implement a button in a sidewall of an electronic device. *See id.* ¶ 47 (testifying "[f]or example, *Polany* discloses that the buttons (1315-1318) along the sidewall of the device included structures and surfaces that could be manually pressed by a user" and citing Ex. 1013, 4:40, 19:42–20:4, Figs. 13B, 17, 19A, 19B).

Although there is not an express combination of the "combined button" embodiment in Figure 10(b) with Figure 18's disclosure of the "combined button" located on the sidewall of a device, the evidence persuasively demonstrates that one of ordinary skill in the art (1) would understand Kim to disclose that the "combined button" structure and function could be implemented on the face or sidewall of a device and (2) would have had a reasonable expectation of success in doing so. *See, e.g.*, Ex. 1004, 17:23–25; *see also Bristol-Myers Squibb Co. v. Ben Venue Labs., Inc.*, 246 F.3d 1368, 1379 (Fed. Cir. 2001) (explaining that "anticipation does not require actual performance of suggestions in a disclosure," instead "anticipation only requires that those suggestions be enabling to one of skill in the art").

(4) Conclusion as to Anticipation for Claim 1

We are particularly persuaded by Kim's express disclosure that "FIGS. 7 and 18 show examples of the combined button located on the front surface or the side surface of the electronic device 701." Ex. 1004, 17:23–25. For this reason and the others discussed above, we find that a person of ordinary skill in the art would understand Kim's written description as sufficiently linking the various "combined button" disclosures, embodiments, and elements described throughout its specification to the embodiment in Figure 18 sufficiently to show that Kim describes a "combined button," located on a side surface of the electronic device in the same way as the challenged claims. Based on all the evidence of record, we determine that Petitioner has proven, by a preponderance of the evidence, that claim 1 is anticipated by Kim under 35 U.S.C. § 102.

c) Obviousness over Kim — Analysis of the Parties' Arguments and Evidence

Even if the combined button embodiments of Figure 10(b) and Figure 18 were not sufficiently linked or "arranged as in the claim" so as to anticipate, we determine that a person of ordinary skill in the art would have been motivated to combine Kim's embodiments and would have had a reasonable expectation of success in doing so, which renders claim 1 obvious.

Petitioner alleges that claim 1 would have been obvious over Kim in view of the combination of the same embodiments in Kim's Figures 10(b) and 18. Pet. 10 ("*Kim* discloses and/or renders obvious claims 1, 5, 9, and 10 of the '619 Patent."). Petitioner argues that a person of ordinary skill in the art "would have been familiar with electronic devices with sealed and/or insulated button assemblies, and would have understood that those assemblies were not limited to the front face of a device." *Id.* at 14–15 (citing Ex. 1003 ¶¶ 110–111). Petitioner's declarant, Dr. Berger, testifies "a person of ordinary skill in the art would understand that a sealed and/or insulated button assembly from one location on a device can be constructed equally on a rear or sidewall of the device." Ex. 1003 ¶ 110.

Patent Owner presents several arguments to the contrary. *See, e.g.*, PO Resp. 26 (Patent Owner arguing that Petitioner "fails to offer sufficient explanation of motivation to combine or reasonable expectation of success that would support using the Figure 10 button in the Figure 18 embodiment.") (citing Ex. 2009 ¶ 53). Patent Owner makes the following specific arguments with respect to obviousness:

> (1) Kim's disclosure does not support the combination, (2) a POSITA would not have been motivated to implement the combination, (3) a POSITA would not have had a reasonable

> expectation of success in implementing the combination, and (4) the combination fails to satisfy the requirement of ***a biometric sensor positioned below the input member*** recited in limitation [1.c.ii]. Further, the Kim Combination is the product of hindsight, e.g., to satisfy the requirements of ***sandwiched*** arrangement recited in limitation [1.f] for the ***button assembly.***

Id. at 27. We address each of these arguments in turn.

As to Patent Owner's first and second arguments, as we discussed in detail above with respect to anticipation, we find that there is sufficient evidence in Kim itself of contextual and even express links between the various combined button embodiments and Figure 18. Section II.D.2.b)(4). We have already determined "that one of ordinary skill in the art would understand Kim to disclose 'combined button' structure and function that could be implemented on the face or sidewall of a device." *Id.* We likewise determine, based on the same evidence, that a person of ordinary skill in the art *would have* understood Kim to suggest that the combined button structure and function, for example in the embodiment of Figure 10(b), could be implemented on the face or sidewall of a device. Obviousness does not require an instruction manual on how to physically incorporate or combine the disclosures of two embodiments in a reference. As *KSR* informs us, "in many cases a person of ordinary skill will be able to fit the teachings of multiple patents together like pieces of a puzzle." *KSR*, 550 U.S. at 420. Moreover, in this case we have only one prior art patent, Kim, so at least the pieces of the puzzle are all in the same box. The persuasive testimony of Dr. Berger that "a person of ordinary skill in the art would have been familiar with electronic devices with sealed and/or insulated button assemblies, and would understand that those assemblies were not limited to the front face of a device," is unrebutted in this case. Ex. 1003 ¶ 110. "A person of ordinary

skill is also a person of ordinary creativity, not an automaton." *KSR*, 550 U.S. at 421.

Given the background knowledge of a person of ordinary skill in the art in conjunction with the motivation and teachings in Kim itself for placing the combined button on the sidewall of the electronic device is sufficient motivation to support the combination of Kim's Figure 10(b) embodiment with the sidewall placement of the combined button taught in Figure 18 for obviousness purposes. It is well-settled that a single prior art obviousness reference itself can provide motivation for the combination. *See General Elec. Co. v. Raytheon Techs. Corp.*, 983 F.3d 1334, 1352 (Fed. Cir. 2020) (Reversing the Board's finding of nonobviousness over a single prior art reference, the Court explained that "the Board's approach would require a motivation to combine each element of the claim—even those present together in a reference. This analysis unduly dissects prior art references into collections of individual elements, requiring a party showing obviousness to re-do the work already done in the prior art reference.").

Patent Owner's third argument is unavailing because, although Dr. Anthony testifies that "implementing the fingerprint sensor assembly of Kim's Figure 10 embodiment in the 'lateral surface' of Kim's Figure 18 embodiment would have complicated the manufacturing process for the resulting mobile device," Dr. Anthony does not provide testimony or evidence that implementing the combined button on the sidewall would have been difficult or beyond the level of ordinary skill in the art. Ex. 2009 ¶ 77. We credit Dr. Berger who explains persuasively that "[p]rior to the '619 patent's earliest alleged priority date of June 19, 2017, a person of ordinary skill in the art would have known that a mobile electronic device could include one or more button assemblies in a sidewall." Ex. 1003 ¶ 47 (citing

Ex. 1013, 4:40, 19:42–20:4, Figs. 13B, 17, 19A, 19B). It is well-settled that a person of ordinary skill can use his or her ordinary skill, creativity, and common sense to make the necessary adjustments and further modifications to result in a properly functioning device. *See KSR*, 550 U.S. at 418 ("the [obviousness] analysis need not seek out precise teachings directed to the specific subject matter of the challenged claim, for a court can take account of the inferences and creative steps that a person of ordinary skill in the art would employ.").

Patent Owner's fourth argument is that Kim is "unable to satisfy the requirement in limitation [1.c.ii] that the ***biometric sensor*** be ***positioned below the input member***." PO Resp. 36. Patent Owner provides annotated Figure 10(b) reproduced below.

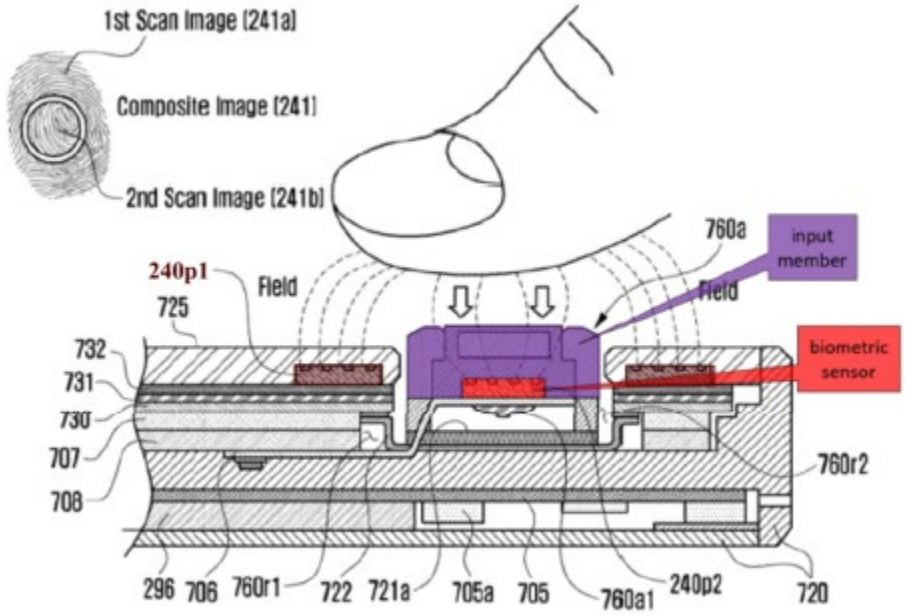

Patent Owner's annotated Figure 10(b) is a cross-section of combined button 760a (colored purple) and biometric sensors 240*p*2 (colored red) and 240*p*1 colored brown).

Patent Owner argues that "fingerprint sensor 240*p*1 is not positioned below a body representing physical button 760*a* (which the Petition maps to the ***input member***)." PO Resp. 36 (citing Ex. 2009 ¶ 82). Patent Owner does not expressly contest that Kim's fingerprint sensor 240*p*2 is positioned "below" the input member. However, Patent Owner argues that Petitioner neglects fingerprint sensor 240*p*1, and that the "omission of fingerprint sensor 240*p*1 also runs contrary to how a POSITA would have understood functionality of the fingerprint sensor assembly of Kim's Figure 10 embodiment." *Id.* at 37 (citing Ex. 2009 ¶ 83).

Claim 1 recites in part:

> [1pre] An electronic device comprising:
>
> . . .
>
> [1cii] *a biometric sensor positioned below the input member* and configured to produce an output signal in response to a touch on the input surface, the output signal corresponding to a biometric characteristic;

Ex. 1001, 26:64–27:7 (emphasis added). As shown above, this limitation requires "a biometric sensor" for example a fingerprint sensor, "positioned below the input member." *Id.* Petitioner points to fingerprint sensor 240*p*2, and asserts that it is shown "below the input member" 760*a*. Pet. Reply 11. Even though Kim discloses a second fingerprint sensor 240*p*1 circumscribing input member 760*a*, fingerprint sensor 240*p*2 satisfies limitation [1.c.ii]. That there are two fingerprint sensors 240p1 and 240p2 disclosed in the "combined button" embodiment of 10(b) does not matter because claim 1, which uses the open-ended term "comprising," is not limited to a single biometric sensor. The language of the claim itself thus resolves Patent Owner's fourth argument.

From a functional perspective, to the extent that Kim discloses that "[t]he electronic device **701** may compose fingerprint images 241*a* and 241*b* respectively obtained by the first and second fingerprint sensors into a single fingerprint image 241," a plain reading of Kim shows the arrangement of two fingerprint sensors is optional, i.e., an alternative. *See*, *e.g.*, Ex. 1004, 21:27–30 (Kim describing that "[e]ach of the physical button 760*a* and the virtual button 760*b* *may* include a fingerprint sensor. For example, the capacitive fingerprint sensor *may* be formed equally in each of the physical button 760*a* and the virtual button 760*b*.") (emphases added). Kim's use of the term "may" is permissive in context and not mandatory.

Finally, we address Patent Owner's conclusion that the combination of the Figure 10(b) and Figure 18 embodiments "is the product of hindsight, e.g., to satisfy the requirements of ***sandwiched*** arrangement recited in limitation [1.f] for the ***button assembly***." PO Resp. 27 (citing *id.* §VI.A.2(a)(4); Ex. 2009 ¶ 54). Patent Owner does not elaborate on this hindsight argument—it appears to be mainly a conclusion asserted by Patent Owner based on the previously alleged lack of combination, motivation, and teaching arguments discussed above—however, we address it for purposes of completeness.

Limitation [1f] recites:

> a portion of the flexible conduit is sandwiched between the seal and the sealing surface or between the seal and the enclosure.

Ex. 1001, 27:13–15. The concept of hindsight is an appropriate consideration when the asserted combination is gleaned mainly, or only, from the challenged patent itself. *See W.L. Gore & Associates, Inc. v. Garlock, Inc.*, 721 F.2d 1540, 1553 (Fed. Cir. 1983) ("To imbue one of ordinary skill in the art with knowledge of the invention in suit, when no

prior art reference or references of record convey or suggest that knowledge, is to fall victim to the insidious effect of a hindsight syndrome wherein that which only the inventor taught is used against its teacher."), *see also Metalcraft of Mayville, Inc. v. The Toro Co.*, 848 F.3d 1358, 1366 (Fed. Cir. 2017) ("[W]e also recognize that we cannot allow hindsight bias to be the thread that stitches together prior art patches into something that is the claimed invention.").

In the present case, Petitioner has shown that Kim discloses limitation [1f], which requires that the flexible electrical conduit "is sandwiched between the seal and the sealing surface or between the seal and the enclosure." *See* Pet. 26 (Petitioner explaining that "Figure 10(b) discloses a portion of the flexible conduit (*i.e.*, *Kim*'s 'flexible PCB 706,' teal) sandwiched between the seal (*i.e.*, *Kim*'s 'sealing rubber 722,' green) and the enclosure (*i.e.*, *Kim*'s 'housing 720' . . . .)).[13] Patent Owner disagrees with the combination of the embodiments in Figures 10(b) and 18, but does not substantively dispute that Kim's Figure 10(b) illustrates the structure recited in limitation [1f]. PO Resp. 27.

[13] Petitioner also argues limitation [1f] in ground 2, asserting that this structure is essentially a matter of design choice where "the flexible PCB would be routed throughout several different pathways in the electronic device, depending on the structure and goals of the device in question, to effectively utilize internal space of the mobile terminal." Pet. 31 (citing Ex. 1003 ¶¶ 172–174). As to limitation [1f], Dr. Berger's testimony is unrebutted that "a person of ordinary skill in the art would understand that the flexible printed circuit board would be routed between the seal (*i.e.*, the gasket) and the sealing surface, as depicted in the altered and annotated Figure 10(b), below, in order to avoid interference with moving pieces of the button assembly." Ex. 1003 ¶ 174.

Patent Owner's argument for limitation [1f] relies mainly on its incorrect previous assertion that because Kim's embodiments in Figures 10(b) and 18 would not have been considered together by a person of ordinary skill in the art, it is only the '619 patent that discloses the implementation of a sealed button with the claimed structure on the sidewall of the device. This hindsight argument is unavailing for the same reasons as discussed above and because we determine on the full record that one of ordinary skill in the art would have understood Kim to disclose or suggest that the combined button structure and function of embodiment 10(b) can be implemented on the sidewall of a device as shown in the embodiment of Figure 18.

d) Conclusion as to Obviousness for Claim 1

Petitioner has shown sufficiently that Kim alone teaches all of the limitations of claim 1, and a person of ordinary skill in the art would have been motivated to combine the combined button embodiments of Figures 10(b) and 18 to arrive at the apparatus of claim 1 with a reasonable expectation of success. *See* Pet. 10–28; Ex. 1003 ¶¶ 68–146. Based on all the evidence of record, we determine that Petitioner has proven, by a preponderance of the evidence, that claim 1 would have been obvious based on Kim under 35 U.S.C. § 103.

3. Dependent Claims 5, 9, and 10

Because we determine that dependent claims 5, 9, and 10 would have been obvious in view of Kim we do not reach Petitioner's anticipation challenge for these dependent claims.

Each of dependent claims 5, 9, and 10 depends directly from claim 1 adding further structural and functional limitations. Claim 5 recites "[t]he

electronic device of claim 1, wherein the flexible conduit passes through an aperture in the seal." As for the limitations in claim 5, Petitioner provides an annotated version of Kim's Figure 10(b), reproduced below.

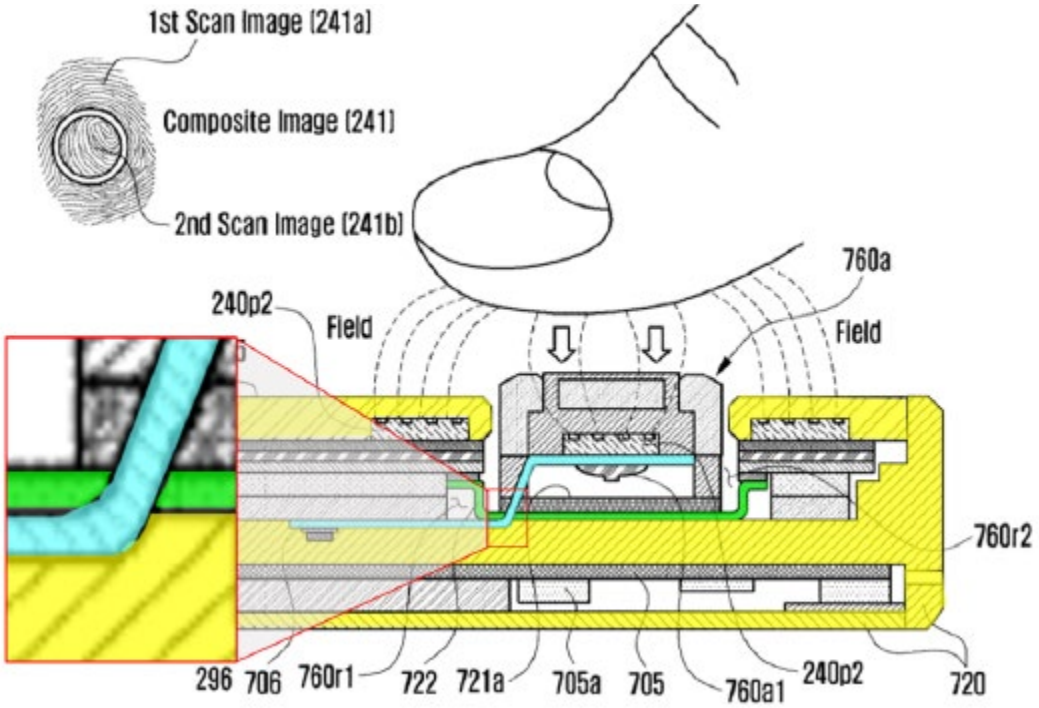

Petitioner argues that its annotated "Figure 10(b) depicts the flexible conduit (teal) passing through an aperture in the seal (green). Pet. 28–29 (citing Ex. 1003 ¶¶ 147–149).

Claim 9 requires that "the biometric sensor is a fingerprint sensor and the biometric characteristic is a fingerprint." Petitioner argues "that '[e]ach of the physical button 760a and the virtual button 760b may include a fingerprint sensor' . . . [m]oreover, *Kim's* device 'may compose fingerprint images.'" *Id.* at 30 (citing Ex. 1004, 21:27–41, 58–22:3; Ex. 1022 ¶¶ 167–170, 173–174; Ex. 1003 ¶¶ 154–155).

Claim 10 adds the limitations wherein "the biometric sensor comprises an array of capacitive sensing elements that are configured to detect either or both of ridges and grooves of a user's finger." Relying on Dr. Berger's

testimony, Petitioner argues that a person of ordinary skill in the art "would have understood a capacitive fingerprint sensor includes 'an array of capacitive sensing elements that are configured to detect either or both of ridges and grooves of a user's finger.'" *Id.* (quoting Ex. 1003 ¶¶ 160–162).

Patent Owner relies on its arguments with respect to independent claim 1 and does not substantively contest Petitioner's additional evidence for dependent claims 5, 9, and 10. *See* PO Resp. 26–38. We disagree with Patent Owner's arguments regarding independent claim 1 for the reasons explained above. Based on Petitioner's contentions and supporting evidence, including the testimony of Dr. Berger, we are persuaded that Petitioner has proven, by a preponderance of the evidence, that Kim renders claims 5, 9, and 10 unpatentable as obvious. *See* Pet. 28–30; Ex. 1003 ¶¶ 147–151, 154–155, 158–162.

E. Ground 2 — Obviousness of Claims 1–10 over Kim

Because we have determined that independent claim 1 is anticipated by or would have been obvious over Kim, and that dependent claims 5, 9, and 10 would have been obvious over Kim, we address below the parties' arguments and evidence with respect to the remaining challenged dependent claims 2–4 and 6–8.

1. Petitioner's Arguments

a) Dependent Claim 2

Claim 2 adds several limitations to claim 1:

> 2. The electronic device of claim 1, wherein the button assembly further comprises:
>
> a tactile dome switch configured to compress in response to a press on the input surface;

> a plunger positioned below the biometric sensor and above the tactile dome switch, the plunger displacing and compressing the tactile dome switch in response to the press on the input surface; and
>
> a retainer defining an aperture housing the plunger; wherein the retainer defines the sealing surface of the button assembly.

Ex. 1001, 27:16–27.

Annotating Kim's figure 10(b), reproduced below, Petitioner argues that Kim discloses tactile dome switch 760a1. Pet. 33.

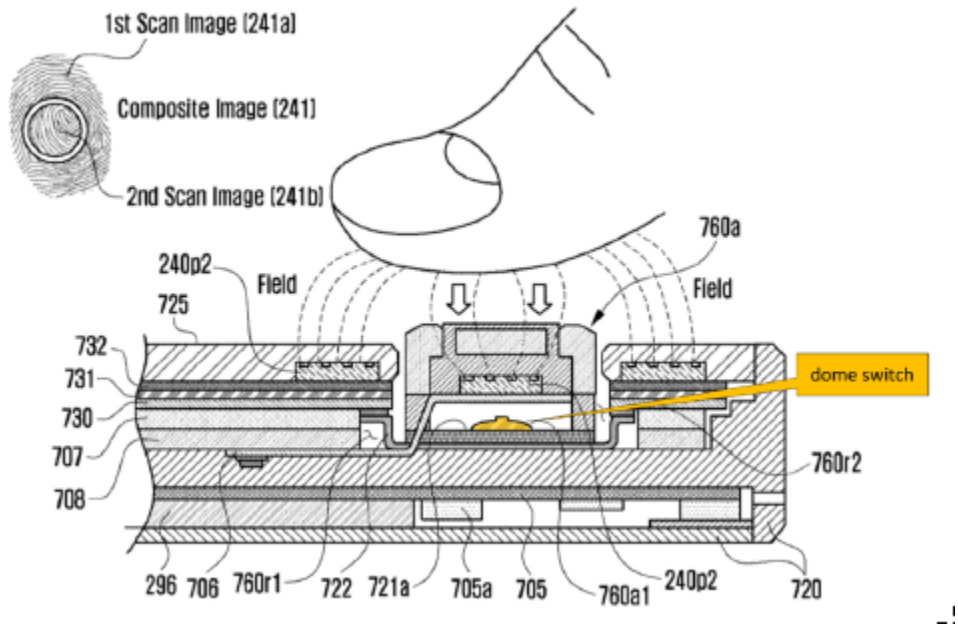

In annotated Figure 10(b), dome switch 760a1, highlighted in yellow and labeled "dome switch," is illustrated as being below physical button 760a. Dr. Berger testifies that "a person of ordinary skill in the art would have known that tactile dome switches function by transferring pressure from a physical input (such as a press on an input surface above the dome switch) to an electronic sensor, through the compression or elastic deformation of the dome switch itself." Ex. 1003 ¶ 184.

Petitioner tacitly acknowledges that Kim's Figure 10(b) does not disclose a specific "plunger" structure, but argues that a person of ordinary skill in the art "would have known tactile dome switches were a common type of switch for use in mobile devices, . . . and would also have known dome switches would be implemented with a plunger and a retainer defining an aperture housing for the plunger." Pet. 35 (citing Ex. 1003 ¶ 186). Dr. Berger testifies that "[w]hen implemented in *Kim*'s button assembly, this known dome switch configuration would have resulted in a plunger positioned below the biometric sensor and above the tactile dome switch, such that the plunger would displace and compress the tactile dome switch in response to the press on the input surface." Ex. 1003 ¶ 187.

Petitioner argues that below the tactile dome switch "Kim also discloses a 'support fixture 721a' which functions as a retainer defining the lower surface of an aperture housing the plunger." Pet. 37 (citing Ex. 1004, 22:28–34; Ex. 1022 ¶ 179). According to the testimony of Dr. Berger

> [a] person of ordinary skill in the art would have understood that because the retainer defined an aperture housing the plunger, that retainer would be formed of a rigid, durable material that would withstand repeated user presses on the input surface. A person of ordinary skill in the art would further have understood that a rigid, durable retainer would be one of a limited number of surfaces that could be used as a sealing surface of the button assembly.

Ex. 1003 ¶ 190.

b) Dependent Claim 3

Claim 3 recites:

> 3. The electronic device of claim 1, wherein:
>
> the seal includes a gasket and a pressure sensitive adhesive (PSA) layer; and

> the portion of the flexible conduit is positioned between the gasket and the sealing surface of the button assembly.

Id. at 27:28–33.

Petitioner argues that Kim's sealing rubber 722 in Figure 10(b) is a gasket and Kim itself describes "[t]he sealing rubber 722 may be adhered to the force touch panel 760t with an adhesive (or an adhesive tape)." Pet. 38 (quoting Ex. 1004, 20:47–50; Ex. 1022 ¶ 159; Ex. 1003 ¶ 196). Dr. Berger testifies that

> a person of ordinary skill in the art would have known that button assemblies and fingerprint sensors in mobile electronic devices should be sealed in order to prevent ingress of potentially damaging moisture and dust. A person of ordinary skill in the art would also have known that common techniques to add a seal were to use a rubber gasket and/or a pressure sensitive adhesive (PSA) layer. For example, common sealing techniques included tape, adhesive, waterproof dispensing, silicon, waterproof rubber, and urethane, as well as gaskets generally. . . . Using these existing, known components would have saved costs and promoted an efficient use of limited space within the mobile device.

Ex. 1003 ¶ 197.

Petitioner provides the following annotated Figure 10(b) from Kim illustrating the routing of flexible PCB 706.

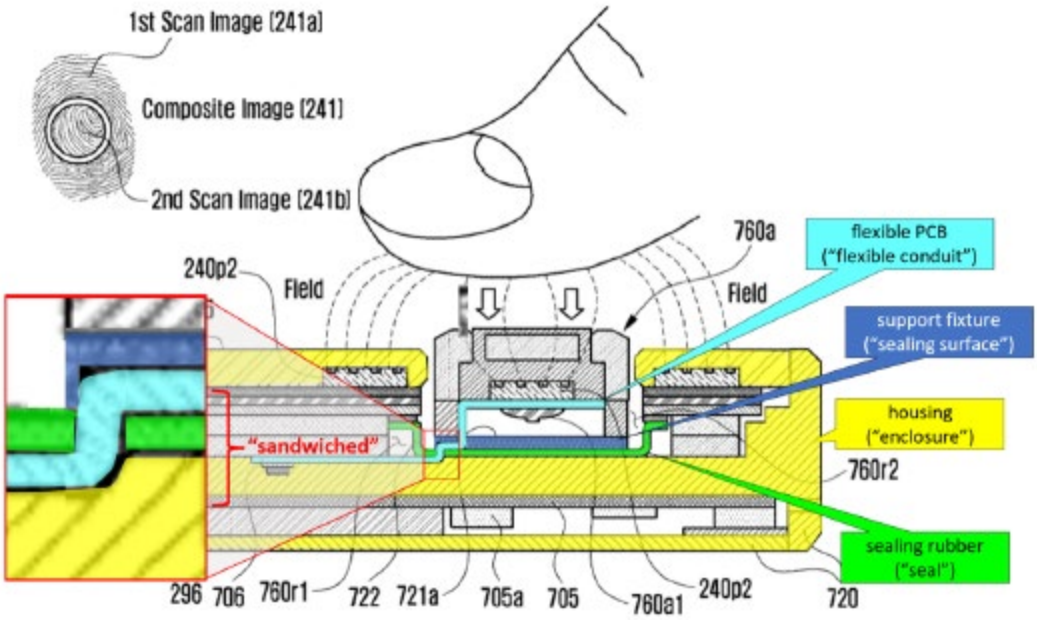

Annotated Figure 10(b) provides an expanded view of a portion of Kim's button assembly showing the arrangement of flexible PCB (light blue) sandwiched between the bottom surface of support fixture 721a (dark blue) and sealing rubber 722 (green). Dr. Berger testifies that "a person of ordinary skill in the art would understand that the flexible PCB is sandwiched between the ***gasket*** seal and the sealing surface of the button assembly." Ex. 1003 ¶ 201.

c) Dependent Claim 4

Claim 4 requires that "the seal is overmolded around the portion of the flexible conduit." Ex. 1001, 27:34–35. Petitioner argues that it was well known to those of ordinary skill in the art to use overmolding "technique[s] in which a material (*i.e.*, epoxy resin) is injected, poured or otherwise loaded into a space to surround another component, then cured so it forms a hard casing or overmold around the component." Pet. 40 (citing Ex. 1003 ¶ 206). Dr. Berger testifies that "a person of ordinary skill in the art would understand that components can be sealed by an overmolded portion so they

are liquid-tight," and that "a person of ordinary skill in the art would have known that overmolding, unlike mechanical fasteners such as screws, bolts, snap fit components, etc., provides for a liquid-tight seal, which is essential for waterproofing delicate electronic components." Ex. 1003 ¶ 207. Dr. Berger testifies further that "[i]n light of this knowledge, a person of ordinary skill in the art would understand that the seal of *Kim* could be overmolded around the portion of the flexible conduit in order to enhance the quality of the seal." *Id.* ¶ 208.

d) Dependent claim 6

Claim 6 recites the additional limitation of "a passage extending from the opening to the enclosed volume wherein the flexible conduit passes through the passage." Ex. 1001, 27:38–40. Petitioner argues that

> [b]ecause *Kim* includes electrical components (*i.e.*, the fingerprint sensor) located in the opening of the enclosure which are separated from a power supply by the enclosure wall, a POSITA would have understood there would have been a passage extending from the opening formed in the sidewall of the enclosure to the enclosed volume."

Pet. 41 (citing Ex. 1003 ¶ 212). Dr. Berger testifies that

> a person of ordinary skill in the art would have known that a biometric sensor (*e.g.*, a fingerprint sensor) outputs an electrical signal that should be electrically connected via the flexible PCB to an integrated circuit or processor disposed within the enclosed volume, and that requires a power supply to function. In order for these connections to occur, *Kim* discloses a passage between the opening and the enclosed volume.

Ex. 1003 ¶ 212.

e) Dependent Claim 7

Claim 7 depends from claim 6, adding "an enclosure shelf is defined at the bottom of the opening; the passage is formed in the enclosure shelf: and the seal encircles the passage." *Id.* at 27:41–44. Petitioner provides the following annotated Figure 10(b) in Kim.

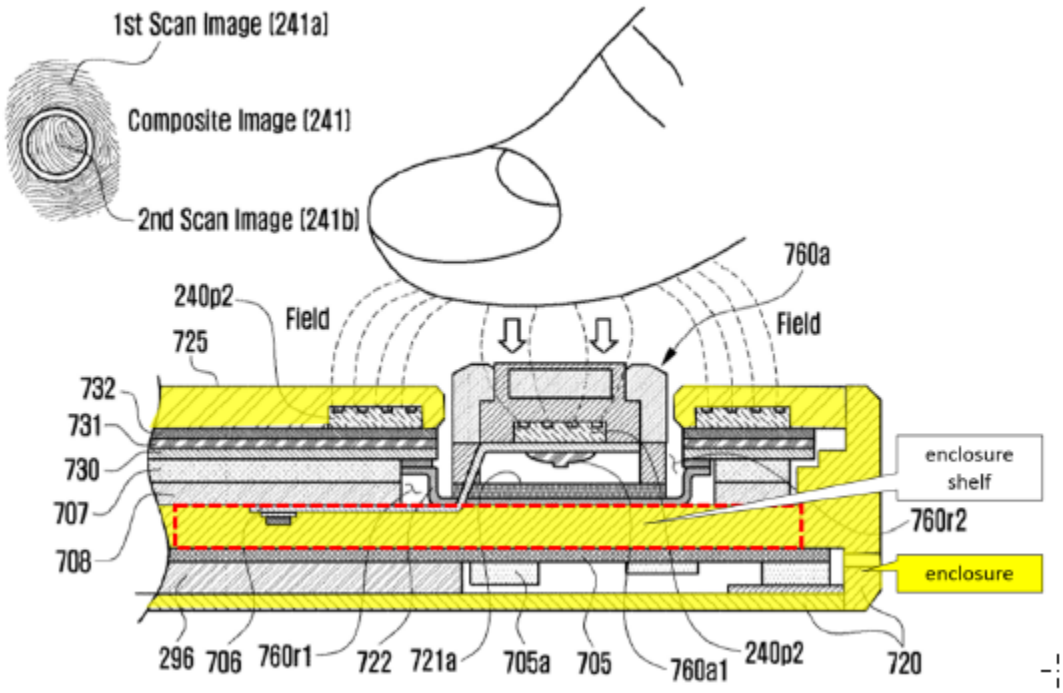

Annotated Figure 10(b) illustrates Kim's button assembly and the arrangement of flexible PCB passing through sealing rubber 722 and along a portion of the enclosure (highlighted in yellow), i.e., a "shelf," as Petitioner indicates with a dashed red box. Pet. 43. Petitioner argues that "Figure 10(b) shows the enclosure shelf separating the electronic components in the button assembly from those within the enclosed volume." *Id.* Dr. Berger testifies that

> because Kim includes electrical components located in the opening of the enclosure which are separated from a power supply by the enclosure shelf, a person of ordinary skill in the art would understand that in order for the electrical components to

> function, there necessarily needs to be a passage extending from the opening to the enclosed volume.

Ex. 1003 ¶ 224. Petitioner argues that a person of ordinary skill in the art "would necessarily conclude that the aperture in the seal aligns with (and encircles) the passage." Pet. 45 (citing Ex. 1003 ¶¶ 229–230). Dr. Berger testifies that "a person of ordinary skill would reasonably conclude that the aperture in the seal aligns with the passage in the enclosure shelf. In light of the fact that the aperture in the seal aligns with the passage in the enclosure shelf, a person of ordinary skill in the art would understand that the seal encircles the passage." Ex. 1003 ¶ 229.

f) Dependent Claim 8

Claim 8 depends from claim 6, adding the limitation "wherein the portion of the flexible conduit encircles the passage." *Id.* at 27:45–46. Petitioner argues that a person of ordinary skill in the art "would have understood the flexible conduit of *Kim* encircles the passage in the same way as the '619 Patent." Pet. 46 (citing Ex. 1003 ¶ 234). Dr. Berger testifies that

> a person of ordinary skill in the art would understand that there is no reason to make the passage any larger than the conduit itself, to prevent contaminants from entering the enclosed volume, and to avoid weaking the structure of the enclosure itself. Thus, a person of ordinary skill in the art would be motivated to create a passage such that the flexible conduit can be said to encircle surround the passage (i.e., encompass it on all sides).

Ex. 1003 ¶ 235.

2. Patent Owner's Arguments for Dependent Claim 4

Patent Owner does not expressly contest Petitioner's arguments and evidence as to claims 2–3 and 6–8 but makes several arguments with respect to claim 4 and Kim. Claim 4 recites:

> The electronic device of claim 1, wherein the seal is overmolded around the portion of the flexible conduit.

Ex. 1001, 27:34–35.

First, Patent Owner argues that "the Petition fails to cite to Kim in mapping claim 4." PO Resp. 63 (citing Pet. 40–41). Second, Patent Owner argues that Dr. Berger "fails to cite to any support for statements regarding overmolding. AliveCor's positions with respect to unpatentability of claim 4 based on Kim are therefore based on general and conclusory expert testimony." *Id.* at 64 (citing *TQ Delta, LLC v. Cisco Sys.* 942 F.3d 1352, 1358 (Fed. Cir. 2019). Third, Patent Owner argues that Dr. Berger "admits 'one skilled in the art would recognize **many different methods**' that are not overmolding, such as use of 'screw[s], bolts, snap fit components, adhesives, press fits, co-molded components' or 'ultrasonically welded components, rotational fits, wedge fits, and other manufacturing means of effecting the assembly of components.'" *Id.* at 65 (citing Ex. 1003 ¶ 207). Patent Owner argues that a person of ordinary skill in the art "would not have understood overmolding to necessarily be the only manufacturing method that enables a 'liquid-tight seal.'" *Id.* at 66 (citing Ex. 2009 ¶ 136). We address these arguments and Patent Owner's evidence in turn, below.

We acknowledge that Petitioner does not cite specifically to Kim for claim 4. This is because Kim itself does not disclose any particular method of affixing sealing rubber 722 in the home button recess 760r2. Kim generally describes that "the sealing rubber 722 may have a sealing and

waterproof function." Ex. 1004, 20:47–48. We also appreciate that Kim's Figures may not expressly illustrate sealing rubber 722 affixed within the button enclosure by overmolding. *See* PO Resp. 67 (Patent Owner arguing that "[i]f the rubber seal 722 was formed by overmolding . . . the rubber seal 722 would conform to and take the shape of the structure over which it is overmolded and thus would reside against the flexible PCB 706 for the entire length (i.e., without the recess).").

We find Patent Owner's first argument as to claim 4 unavailing. Petitioner's obviousness argument is not based entirely on Kim, but on the knowledge and level of ordinary skill in the art. *See, e.g.*, Pet. 40 (Petitioner arguing that "a POSITA would have known overmolding refers to a technique in which a material (*i.e.*, epoxy resin) is injected, poured or otherwise loaded into a space to surround another component, then cured so it forms a hard casing or overmold around the component."). It is permissible for Petitioner to rely on Dr. Berger's testimony, for example as to how a person of ordinary skill in the art might modify or affix sealing rubber 722 in Kim's button enclosure. *See Koninklijke Philips N.V. v. Google LLC*, 948 F.3d 1330, 1337 (Fed. Cir. 2020) ("Although the prior art that can be considered in inter partes reviews is limited to patents and printed publications, it does not follow that we ignore the skilled artisan's knowledge when determining whether it would have been obvious to modify the prior art. . . . Regardless of the tribunal, the inquiry into whether any 'differences' between the invention and the prior art would have rendered the invention obvious to a skilled artisan necessarily depends on such artisan's knowledge.").

As to Patent Owner's second argument, we find that Dr. Berger has adequately supported his testimony that a person of ordinary skill in the art

would have considered overmolding techniques to affix a flexible rubber seal in Kim's button enclosure. Dr. Berger testifies that "[p]rior to the '619 patent's earliest alleged priority date of June 19, 2017, a person of ordinary skill in the art would have known that overmolding refers to a technique in which a one material is molded over a substrate, often by injection." Ex. 1003 ¶ 51. Supporting his testimony that overmolding was a well-known manufacturing technique, Dr. Berger provides several supporting prior art references discussing overmolding, some of which are assigned to Apple. *Id.* ¶¶ 51–52. Dr. Berger points to U.S. Patent No. 9,973,840 B2, to Wagman, which disclose overmolding various components of an electrical receptacle connector, for example, where "contacts 2930 and ground latch 2965, can then be overmolded with dielectric overmold portion 2975. Overmold portion 2975 covers a portion of spacer 2920 and the anchor portion of each contact in the set of contacts 2930 forming a liquid-tight seal to leads 2955 and ground latch 2965." *Id.* ¶ 52 (citing Ex. 1019, 40:26–32). More relevant to Kim's rubber seal 722, Dr. Berger testifies that another Apple application, U.S. Patent Pub. 2013/0108082, to

> *Dave* discloses "hard material 46 around a boot of soft material (e.g., overmolded silicon or rubber) . . . that engages or forms a friction seal onto the surface' (Ex. 1020, [0052]; *see also* [0048], [0050] (disclosing a "metal ring 40 that is overmolded . . . with soft material 41 that engage[s] or form[s] a friction seal onto the surface))."

Ex. 1003 ¶ 52.

Given this background knowledge within the ordinary artisan's level of skill, Dr. Berger testifies persuasively that "a person of ordinary skill in the art would have known that overmolding, unlike mechanical fasteners such as screws, bolts, snap fit components, etc., provides for a liquid-tight

seal, which is essential for waterproofing delicate electronic components." Ex. 1003 ¶ 207. Dr. Berger summarizes, that "[i]n light of this knowledge, a person of ordinary skill in the art would understand that the seal of *Kim* could be overmolded around the portion of the flexible conduit in order to enhance the quality of the seal." *Id.* ¶ 208.

Considering the third argument, Patent Owner argues that "Dr. Berger suggests overmolding is useful to enable a 'liquid-tight seal' but omits discussion of other manufacturing methods that may enable a 'liquid-tight seal' and fails to cite to any support for statements regarding overmolding." PO Resp. 64. We credit Dr. Berger in this case because he has cited persuasive support for his opinions regarding overmolding, some of which we discussed immediately above, including patents assigned to Apple. *See* Ex. 1003 ¶¶ 51–52; *see also* Ex. 1019 code (73); Ex. 1020 code (73). And, while there may have existed other ways of sealing a button in a recess on an electronic device such as a mobile phone, this does not mean that a person of ordinary skill in the art would not have considered overmolding techniques to have been obvious. *See Intel Corp. v. Qualcomm Inc.*, 21 F.4th 784, 800 (Fed. Cir. 2021) (The Federal Circuit explaining that "[i]t's not necessary to show that a combination is the *best* option, only that it be a *suitable* option.") (citation omitted).

We do not credit Dr. Anthony's testimony to the contrary because it parrots Patent Owner's arguments with respect to selecting overmolding over other sealing techniques that are inconsistent with obviousness law and asserts, incorrectly, that Dr. Berger does not cite to supporting authority. Ex. 2009 ¶¶ 133–134. For example, Dr. Anthony testifies that "a POSITA would not have understood overmolding to be the only manufacturing method that enables a "liquid-tight seal." *Id.* ¶ 135. To the extent this is

true, it fails to explain why a person of ordinary skill in the art would not have considered it obvious to use well-known overmolding techniques for Kim's seal. Dr. Anthony further testifies that Kim provides no disclosure of overmolding and that "[i]f the rubber seal 722 was formed by overmolding as AliveCor defines it, the edges of the rubber seal 722 would not be raised with the recess 760*r*1 present." *Id.* ¶ 140. Again, we acknowledge that Kim does not disclose overmolding, or any other method of implementing rubber seal 722. Yet this does not explain why a person of ordinary skill in the art, familiar with various known techniques of sealing electrical components, would not have considered well-known and effective overmolding techniques. Moreover, Dr. Anthony never testifies that implementing Kim's seal by overmolding was technologically difficult or beyond the level of ordinary skill in the art. *See* Ex. 2009 ¶¶ 132–140.

Based on the complete record in this case, we determine that using overmolding techniques to seal Kim's flexible conduit as required by claim 4 would have been obvious based on evidence that it was known generally in the art to use overmolding manufacturing techniques on electrical components and instruments to seal them against liquid intrusion or passage. *See* Ex. 1003 ¶¶ 47–49; *see also* KSR, 550 U.S. at 417 ("If a person of ordinary skill can implement a predictable variation, § 103 likely bars its patentability.").

3. Conclusion as to Obviousness for Dependent Claims 2–4 and 6–8

Apart from claim 4 discussed above, Patent Owner does not offer specific counter arguments to Petitioner's arguments and evidence for the remaining dependent claims 2–3 and 6–8. For the remaining dependent claims, Patent Owner contends mainly that Kim's disclosure does not

support, or provide motivation, for the combination of the embodiments shown in Kim's Figures 10(b) and 18. *See* PO Resp. 27–32. Importantly, we find Dr. Berger's testimony, reasoning and supporting evidence persuasive as to obviousness for all the dependent claims.

We have considered and, on the complete record before us, adopt as our own, Petitioner's arguments and evidence set forth at pages 33–47 of the Petition as to remaining dependent claims 2–3 and 6–8. Accordingly, we determine that Petitioner has shown by a preponderance of the evidence that claims 2–4 and 6–8 would have been obvious over Kim.

F. Grounds 3 and 4 — Obviousness over Jung and Meyers (Claims 1 and 3–10), and Chang (Claims 1–2, 6, and 9)

Because we determine that claims 1–10 are anticipated by or would have been obvious over Kim we need not address whether these same claims would have been obvious over Jung and Meyers or Chang.

III. CONCLUSION[14]

For the reasons discussed above, we determine Petitioner meets its burden of establishing, by a preponderance of the evidence, that the challenged claims are unpatentable as summarized in the following table:

[14] Should Patent Owner wish to pursue amendment of the challenged claims in a reissue or reexamination proceeding subsequent to the issuance of this decision, we draw Patent Owner's attention to the April 2019 Notice Regarding Options for Amendments by Patent Owner Through Reissue or Reexamination During a Pending AIA Trial Proceeding. *See* 84 Fed. Reg. 16,654 (Apr. 22, 2019). If Patent Owner chooses to file a reissue application or a request for reexamination of the challenged patent, we remind Patent Owner of its continuing obligation to notify the Board of any such related matters in updated mandatory notices. *See* 37 C.F.R. § 42.8(a)(3), (b)(2).

Claim(s)	35 U.S.C. §	Reference(s)/ Basis	Claim(s) Shown Unpatentable	Claim(s) Not Shown Unpatentable
1, 5, 9–10	102	Kim	1[15]	
1, 5, 9–10	103	Kim	1, 5, 9–10	
1–10	103	Kim	1–10	
1, 3–10	103	Jung, Meyers[16]		
1–2, 6, 9	102	Chang[17]		
1–2, 6, 9	103	Chang		
Overall Outcome			1–10	

III. ORDER

For the reasons given, it is

ORDERED that, based on a preponderance of the evidence, claims 1–10 of the '619 patent have been shown to be unpatentable; and

[15] Because we determine that dependent claims 5, 9, and 10 would have been obvious based on Kim, we do not reach Petitioner's anticipation challenge for these dependent claims.
[16] Because Petitioner's contentions regarding the obviousness of claims 1–10 in view of Kim are dispositive of these challenged claims, we do not reach asserted ground 3. *See In re Gleave*, 560 F.3d 1331, 1338 (Fed. Cir. 2009).
[17] Because Petitioner's contentions regarding the obviousness of claims 1–10 in view of Kim are dispositive of these challenged claims based on Chang, we do not reach asserted ground 4. *See In re Gleave*, 560 F.3d. at 1338.

FURTHER ORDERED that, because this is a Final Written Decision, any party to the proceeding seeking judicial review of this Decision must comply with the notice and service requirements of 37 C.F.R. § 90.2.

For PETITIONER:

Christopher TL Douglas
Scott M. Stevens
J. Ravindra Fernando
Erin Beaton
ALSTON & BIRD LLP
christopher.douglas@alston.com
scott.stevens@alston.com
ravi.fernando@alston.com
erin.beaton@alston.com

PATENT OWNER:

W. Karl Renner
Grace Kim
Ryan Chowdhury
Parvin Ghane
Jeremy Monaldo
FISH & RICHARDSON P.C.
axf-ptab@fr.com
gkim@fr.com
rchowdhury@fr.com
ghane@fr.com
jjm@fr.com